Split

# Air Conditioning Technical Data

# 2MXF-A

> 2MXF40A2V1B
> 2MXF50A2V1B

# TABLE OF CONTENTS

## 2MXF-A


1 Features . . . 2

2 Specifications . . . 3
Technical Specifications . . . 3
Electrical Specifications . . . 4

3 Electrical data . . . 5

4 Combination table . . . 6

5 Capacity tables . . . 7
Capacity Table Legend . . . 7
Cooling Capacity Tables . . . 8
Heating Capacity Tables . . . 11

6 Dimensional drawings . . . 12

7 Centre of gravity . . . 13

8 Piping diagrams . . . 14

9 Wiring diagrams . . . 15
Wiring Diagrams - Single Phase . . . 15

10 Sound data . . . 16
Sound Pressure Spectrum . . . 16

11 Operation range . . . 17

# 1 Features

- Seasonal efficiency values up to A+++ in cooling and A++ in heating thanks to its up-to-date technology and built-in intelligence
- Up to 2 indoor units can be connected to 1 multi outdoor unit; all indoor units are individually controllable and do not need to be installed in the same room or at the same time. They operate simultaneously within the same heating or cooling mode.
- Choosing for an R-32 product, reduces the environmental impact with 68% compared to R-410A and leads directly to lower energy consumption thanks to its high energy efficiency
- Different types of indoor units can be connected: e.g. wall mounted, ceiling mounted cassette corner, concealed ceiling unit
- Outdoor units are fitted with a swing compressor, renowned for its low noise and high energy efficiency



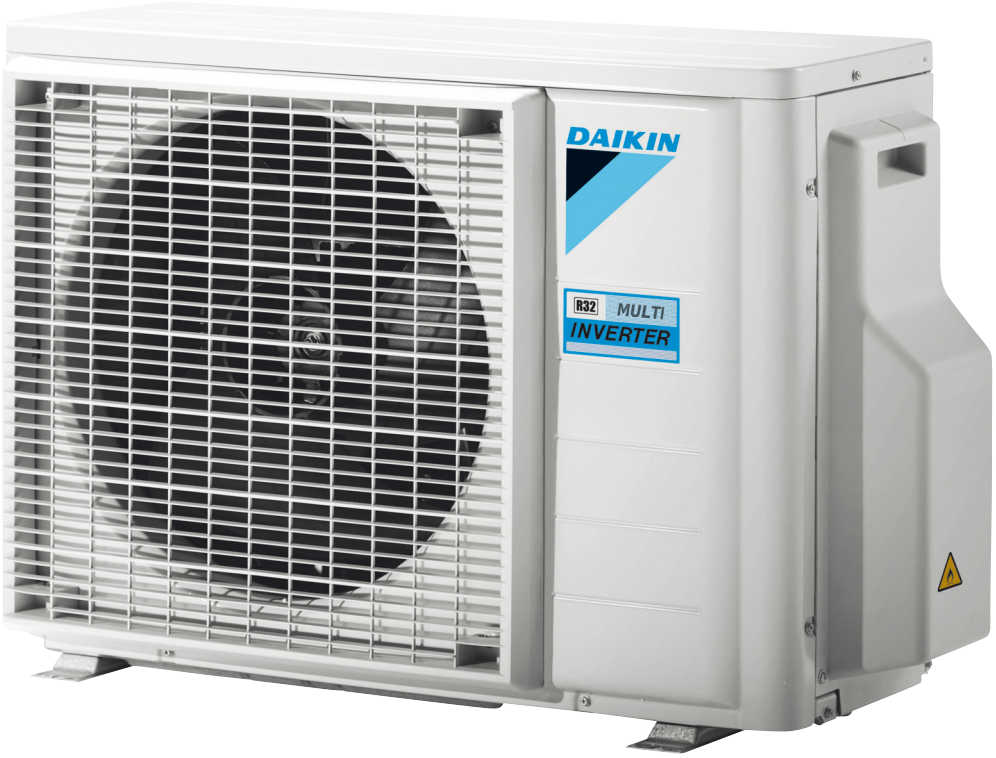

Inverter

# 2 Specifications

| 2-1 Technical Specifications | | | | | 2MXF40A | 2MXF50A |
|---|---|---|---|---|---|---|
| Capacity control | Method | | | | Variable (inverter) | |
| Casing | Colour | | | | Ivory white | |
| Dimensions | Unit | Height | | mm | 550 | |
| | | Width | | mm | 765 | |
| | | Depth | | mm | 285 | |
| | Packed unit | Height | | mm | 614 | |
| | | Width | | mm | 900 | |
| | | Depth | | mm | 357 | |
| Weight | Unit | | | kg | 36 | 41 |
| | Packed unit | | | kg | 38 | 43 |
| Heat exchanger | Length | | | mm | 805 | 810 |
| | Rows | Quantity | | | 2 | |
| | Fin pitch | | | mm | 1.50 | |
| | Stages | Quantity | | | 24 | |
| | Passes | Quantity | | | 3.2 | |
| | Tube type | | | | 7.0 Hi-XD | 8.1 Hi-XA |
| | Tube diameter | | | mm | 7.0 | 8.1 |
| | Fin | Type | | | WF fin | |
| | | Treatment | | | Anti-corrosion treatment | |
| Compressor | Power input | Cooling | Nom. | W | 970 | 1,246 |
| | | Heating | Nom. | W | 981 | 1,372 |
| | Quantity | | | | 1 | |
| | Model | | | | 1YC25GXD#C | 2YC40JXD#C |
| | Oil Amount | | | cm³ | 375 | 650 |
| | Type | | | | Hermetically sealed swing compressor | |
| | Output | | | W | 800 | 1,300 |
| | Oil Type | | | | FW68DA | |
| Fan | Type | | | | Propeller fan | |
| | Discharge direction | | | | Horizontal | |
| | Quantity | | | | 1 | |
| | Air flow rate | Cooling | High | m³/min | 36 | 37 |
| | | | | cfm | 1,271 | 1,306 |
| | | Heating | High | m³/min | 32 | 34 |
| | | | | cfm | 1,130 | 1,200 |
| Fan motor | Quantity | | | | 1 | |
| | Model | | | | LFD-280-23-8F | |
| | Output | | | W | 50 | |
| | Speed | Cooling | High | rpm | 900 | 950 |
| | | | Super low | rpm | 500 | |
| | | Heating | High | rpm | 820 | 890 |
| | | | Super low | rpm | 320 | 500 |
| Sound power level | Cooling | | | dBA | 60 | |
| | Heating | | | dBA | 62 | |
| Sound pressure level | Cooling | High | | dBA | 46 | 48 |
| | Heating | High | | dBA | 48 | 50 |
| Operation range | Cooling | Ambient | Min. | °CDB | -10 | |
| | | | Max. | °CDB | 46 | |
| | Heating | Ambient | Max. | °CDB | 24 | |
| Refrigerant | Type | | | | R-32 | |
| | Charge | | | kg | 0.88 | 1.15 |
| | | | | $TCO_2eq$ | 0.60 | 0.78 |
| | Control | | | | Expansion valve | |
| | GWP | | | | 675 | |

# 2 Specifications



| 2-1 Technical Specifications | | | | | 2MXF40A | 2MXF50A |
|---|---|---|---|---|---|---|
| Piping connections | Liquid | Quantity | | | 2 | |
| | | Type | | | Flare connection | |
| | | OD | | mm | 6.4 | |
| | Gas | Quantity | | | 2 | 1 |
| | | Type | | | Flare connection | |
| | | OD | | mm | 9.5 | |
| | Drain | Quantity | | | 1 | |
| | | Type | | | Drain Joint | |
| | | OD | | mm | 16 (inner diameter of connecting hose) | |
| | Gas 2 | Quantity | | | - | 1 |
| | | Type | | | - | Flare connection |
| | | OD | | mm | - | 12.70 |
| | Piping length | OU - IU | Min. | m | 3 (1) | |
| | | | Max. | m | 20 (1) | |
| | | System | Chargeless | m | 20 | |
| | Additional refrigerant charge | | | kg/m | 0.02 (for piping length exceeding 20m) | |
| | Level difference | IU - OU | Max. | m | 15.0 | |
| | | IU - IU | Max. | m | 7.5 | |
| | Heat insulation | | | | Both liquid and gas pipes | |
| | Total piping length | System | Actual | m | 30.0 | |

Standard Accessories : Installation manual; Quantity : 1;

Standard Accessories : Screw bag; Quantity : 1;

Standard Accessories : Drain plug; Quantity : 1;

Standard Accessories : Reducer assembly; Quantity : 1;

| 2-2 Electrical Specifications | | | 2MXF40A | 2MXF50A |
|---|---|---|---|---|
| Power supply | Phase | | 1~ | |
| | Frequency | Hz | 50 | |
| | Voltage | V | 220-230-240 | |
| Wiring connections | For power supply | Quantity | 3 | |
| | | Remark | Earth wire included | |
| | For connection with indoor | Quantity | 4 | |
| | | Remark | Earth wire included | |

**Notes**

(1) For one room

See separate drawing for operation range

See separate drawing for electrical data

Contains fluorinated greenhouse gases

# 3 Electrical data

## 3 - 1 Electrical Data



**2MXF-A**

| Outdoor unit | Power supply | | | ·RA· indoor units (·10·% safety factor) See note ·5·. | | Other indoor units (·10·% safety factor) | | COMP | | OFM | |
|---|---|---|---|---|---|---|---|---|---|---|---|
| Model name | Hz | Voltag | Voltage range | MCA | MFA | MCA | MFA | RHz | RLA | kW | FLA |
| 2MXM40M3V1B<br>2MXM40M4V1B | 50 | 220 | MAX. 50Hz 264V<br>MIN. 50Hz 198V | 9,80 | 16 | 9,80 | 16 | - | 5,1 | 0,040 | 0,17 |
| | 50 | 230 | | | | | | | 5,3 | | |
| | 50 | 240 | | | | | | | 5,6 | | |
| 2MXM50M2V1B9<br>2MXM50M3V1B9 | 50 | 220 | MAX. 50Hz 264V<br>MIN. 50Hz 198V | 12,94 | 16 | 13,27 | 16 | - | 5,9 | 0,042 | 0,18 |
| | 50 | 230 | | | | | | | 6,2 | | |
| | 50 | 240 | | | | | | | 6,5 | | |
| 2AMXM40M3V1B<br>2AMXM40M4V1B | 50 | 220 | MAX. 50Hz 264V<br>MIN. 50Hz 198V | 9,80 | 16 | 9,80 | 16 | - | 5,1 | 0,040 | 0,17 |
| | 50 | 230 | | | | | | | 5,3 | | |
| | 50 | 240 | | | | | | | 5,6 | | |
| 2AMXM50M3V1B<br>2AMXM50M4V1B | 50 | 220 | MAX. 50Hz 264V<br>MIN. 50Hz 198V | 12,94 | 16 | 13,27 | 16 | - | 5,9 | 0,042 | 0,18 |
| | 50 | 230 | | | | | | | 6,2 | | |
| | 50 | 240 | | | | | | | 6,5 | | |
| 2AMXF40A2V1B | 50 | 220 | MAX. 50Hz 264V<br>MIN. 50Hz 198V | 9,80 | 16 | 9,80 | 16 | - | 5,1 | 0,040 | 0,17 |
| | 50 | 230 | | | | | | | 5,3 | | |
| | 50 | 240 | | | | | | | 5,6 | | |
| 2AMXF50A2V1B | 50 | 220 | MAX. 50Hz 264V<br>MIN. 50Hz 198V | 12,83 | 16 | 12,83 | 16 | - | 5,9 | 0,042 | 0,18 |
| | 50 | 230 | | | | | | | 6,2 | | |
| | 50 | 240 | | | | | | | 6,5 | | |
| 2MXF40A2V1B | 50 | 220 | MAX. 50Hz 264V<br>MIN. 50Hz 198V | 9,80 | 16 | 9,80 | 16 | - | 5,1 | 0,040 | 0,17 |
| | 50 | 230 | | | | | | | 5,3 | | |
| | 50 | 240 | | | | | | | 5,6 | | |
| 2MXF50A2V1B | 50 | 220 | MAX. 50Hz 264V<br>MIN. 50Hz 198V | 12,83 | 16 | 12,83 | 16 | - | 5,9 | 0,042 | 0,18 |
| | 50 | 230 | | | | | | | 6,2 | | |
| | 50 | 240 | | | | | | | 6,5 | | |

Notes
1) The ·RLA· is based on the following conditions.
   Outdoor temperature ·35·°C DB
   Indoor temperature ·27·°C DB / ·19·°C WB
2) Select the wire size according to the MCA.
3) The maximum allowable voltage that is unbalanced between phases is ·2·%.
4) Use a circuit breaker instead of a fuse.
5) Only for wall-mounted ·FVXM· units

Symbols
MCA: Minimum Circuit Ampere [A]
MFA: Maximum Fuse Ampere [A]
RLA: Rated load amps [A]
OFM: Outdoor fan motor
RHz: Rated operating frequency [Hz]
FLA: Full Load Ampere [A]
kW: Fan motor rated output [kW]

**3D110207D**

# 4 Combination table

## 4 - 1 Combination Table



### 2MXF40A

Cooling ·(50Hz 230V)·

| Outdoor unit | Indoor unit | Cooling capacity [kW] | | Total capacity [kW] | | | Power input [kW] | | | Total current [A] | | | Power factor [%] |
|---|---|---|---|---|---|---|---|---|---|---|---|---|---|
| | | Room A | Room B | Minimum | Nominal | Maximum | Minimum | Nominal | Maximum | Minimum | Nominal | Maximum | |
| 2MXF40A2V1B | 2,0 | 2,00 | --- | 1,30 | 2,00 | 2,40 | 0,33 | 0,44 | 0,57 | 1,78 | 2,38 | 3,09 | 79 |
| | 2,5 | 2,50 | --- | 1,30 | 2,50 | 3,00 | 0,33 | 0,61 | 0,80 | 1,78 | 3,33 | 4,40 | 79 |
| | 3,5 | 3,50 | --- | 1,30 | 3,50 | 4,00 | 0,33 | 1,04 | 1,35 | 1,78 | 5,71 | 7,38 | 79 |
| | 2.0+2.0 | 2,00 | 2,00 | 1,50 | 4,00 | 4,20 | 0,30 | 1,02 | 1,20 | 1,67 | 5,64 | 5,93 | 79 |
| | 2.0+2.5 | 1,78 | 2,22 | 1,50 | 4,00 | 4,30 | 0,30 | 1,01 | 1,20 | 1,67 | 5,57 | 6,02 | 79 |
| | 2.0+3.5 | 1,45 | 2,55 | 1,50 | 4,00 | 4,50 | 0,30 | 0,99 | 1,29 | 1,67 | 5,46 | 6,24 | 79 |
| | 2.5+2.5 | 2,00 | 2,00 | 1,50 | 4,00 | 4,40 | 0,30 | 1,00 | 1,25 | 1,67 | 5,51 | 6,13 | 79 |
| | 2.5+3.5 | 1,67 | 2,33 | 1,50 | 4,00 | 4,60 | 0,30 | 0,98 | 1,28 | 1,67 | 5,40 | 6,32 | 79 |

Heating ·(50Hz 230V)·

| Outdoor unit | Indoor unit | Heating capacity [kW] | | Total capacity [kW] | | | Power input [kW] | | | Total current [A] | | | Power factor [%] |
|---|---|---|---|---|---|---|---|---|---|---|---|---|---|
| | | Room A | Room B | Minimum | Nominal | Maximum | Minimum | Nominal | Maximum | Minimum | Nominal | Maximum | |
| 2MXF40A2V1B | 2,0 | 3,00 | --- | 1,00 | 3,00 | 3,70 | 0,26 | 0,83 | 1,26 | 1,43 | 4,52 | 6,89 | 79 |
| | 2,5 | 3,40 | --- | 1,00 | 3,40 | 4,10 | 0,26 | 1,02 | 1,50 | 1,43 | 5,59 | 8,20 | 79 |
| | 3,5 | 3,80 | --- | 1,00 | 3,80 | 4,40 | 0,26 | 1,28 | 1,73 | 1,43 | 7,35 | 9,51 | 79 |
| | 2.0+2.0 | 2,10 | 2,10 | 1,30 | 4,20 | 4,60 | 0,24 | 1,02 | 1,14 | 1,31 | 5,64 | 6,18 | 79 |
| | 2.0+2.5 | 1,87 | 2,33 | 1,30 | 4,20 | 4,70 | 0,24 | 1,01 | 1,16 | 1,31 | 5,59 | 6,26 | 79 |
| | 2.0+3.5 | 1,53 | 2,67 | 1,30 | 4,20 | 4,80 | 0,24 | 0,99 | 1,16 | 1,31 | 5,48 | 6,27 | 79 |
| | 2.5+2.5 | 2,10 | 2,10 | 1,30 | 4,20 | 4,70 | 0,24 | 1,00 | 1,14 | 1,31 | 5,53 | 6,19 | 79 |
| | 2.5+3.5 | 1,75 | 2,45 | 1,30 | 4,20 | 4,80 | 0,24 | 0,98 | 1,14 | 1,31 | 5,42 | 6,20 | 79 |

Notes
1. The total capacity of each connected indoor unit is up to ·6.0·kW.
2. The values above are for connecting with the following indoor unit types:
   ·2.0, 2.5, 3.5· kW class
   Wall-mounted ·FTXF-A, FTXF-B· series
3. These indoor units can only be used in a multi-unit setup.
4. Cooling capacity conditions
   Indoor temperature ·27·°C DB / ·19·°C WB
   Outdoor temperature ·35·°C DB
5. Heating capacity conditions
   Indoor temperature ·20·°C DB
   Outdoor temperature ·7·°C DB / ·6·°C WB

3D126692A

### 2MXF50A

Cooling ·(50Hz 230V)·

| Outdoor unit | Indoor unit | Cooling capacity [kW] | | Total capacity [kW] | | | Power input [kW] | | | Total current [A] | | | Power factor [%] |
|---|---|---|---|---|---|---|---|---|---|---|---|---|---|
| | | Room A | Room B | Minimum | Nominal | Maximum | Minimum | Nominal | Maximum | Minimum | Nominal | Maximum | |
| 2MXF50A2V1B | 2,0 | 2,00 | --- | 1,40 | 2,00 | 2,60 | 0,31 | 0,47 | 0,69 | 1,53 | 2,25 | 3,37 | 89 |
| | 2,5 | 2,50 | --- | 1,40 | 2,50 | 3,10 | 0,31 | 0,67 | 0,92 | 1,53 | 3,27 | 4,50 | 89 |
| | 3,5 | 3,50 | --- | 1,40 | 3,50 | 4,00 | 0,31 | 1,09 | 1,42 | 1,53 | 5,32 | 6,95 | 89 |
| | 2.0+2.0 | 2,00 | 2,00 | 1,80 | 4,00 | 5,00 | 0,43 | 1,12 | 1,48 | 1,64 | 5,48 | 6,85 | 89 |
| | 2.0+2.5 | 2,00 | 2,50 | 1,80 | 4,50 | 5,10 | 0,44 | 1,27 | 1,51 | 1,64 | 6,22 | 7,05 | 89 |
| | 2.0+3.5 | 1,82 | 3,18 | 1,80 | 5,00 | 5,40 | 0,46 | 1,47 | 1,72 | 1,64 | 7,20 | 7,78 | 89 |
| | 2.5+2.5 | 2,50 | 2,50 | 1,80 | 5,00 | 5,30 | 0,46 | 1,48 | 1,64 | 1,64 | 7,25 | 7,69 | 89 |
| | 2.5+3.5 | 2,08 | 2,92 | 1,80 | 5,00 | 5,40 | 0,46 | 1,47 | 1,65 | 1,64 | 7,16 | 7,74 | 89 |
| | 3.5+3.5 | 2,50 | 2,50 | 1,80 | 5,00 | 5,40 | 0,45 | 1,45 | 1,63 | 1,64 | 7,08 | 7,65 | 89 |

Heating ·(50Hz 230V)·

| Outdoor unit | Indoor unit | Heating capacity [kW] | | Total capacity [kW] | | | Power input [kW] | | | Total current [A] | | | Power factor [%] |
|---|---|---|---|---|---|---|---|---|---|---|---|---|---|
| | | Room A | Room B | Minimum | Nominal | Maximum | Minimum | Nominal | Maximum | Minimum | Nominal | Maximum | |
| 2MXF50A2V1B | 2,0 | 3,00 | --- | 1,10 | 3,00 | 3,70 | 0,27 | 0,82 | 1,13 | 1,33 | 3,99 | 5,52 | 89 |
| | 2,5 | 3,40 | --- | 1,10 | 3,40 | 4,10 | 0,25 | 0,99 | 1,34 | 1,23 | 4,81 | 6,54 | 89 |
| | 3,5 | 4,00 | --- | 1,10 | 4,00 | 4,60 | 0,25 | 1,24 | 1,53 | 1,23 | 6,03 | 7,46 | 89 |
| | 2.0+2.0 | 2,60 | 2,60 | 1,20 | 5,20 | 5,70 | 0,30 | 1,40 | 1,53 | 1,12 | 6,84 | 7,50 | 89 |
| | 2.0+2.5 | 2,49 | 3,11 | 1,20 | 5,60 | 5,80 | 0,30 | 1,50 | 1,55 | 1,12 | 7,34 | 7,61 | 89 |
| | 2.0+3.5 | 2,04 | 3,56 | 1,20 | 5,60 | 5,90 | 0,30 | 1,49 | 1,56 | 1,23 | 7,31 | 7,71 | 89 |
| | 2.5+2.5 | 2,80 | 2,80 | 1,20 | 5,60 | 5,80 | 0,30 | 1,51 | 1,55 | 1,12 | 7,38 | 7,65 | 89 |
| | 2.5+3.5 | 2,33 | 3,27 | 1,20 | 5,60 | 6,00 | 0,31 | 1,48 | 1,59 | 1,23 | 7,24 | 7,76 | 89 |
| | 3.5+3.5 | 2,80 | 2,80 | 1,30 | 5,60 | 6,10 | 0,33 | 1,47 | 1,61 | 1,23 | 7,19 | 7,84 | 89 |

Notes
1. The total capacity of each connected indoor unit is up to ·7.0·kW.
2. The values above are for connecting with the following indoor unit types:
   ·2.0, 2.5, 3.5· kW class
   Wall-mounted ·FTXF-A, FTXF-B· series
3. These indoor units can only be used in a multi-unit setup.
4. Cooling capacity conditions
   Indoor temperature ·27·°C DB / ·19·°C WB
   Outdoor temperature ·35·°C DB
5. Heating capacity conditions
   Indoor temperature ·20·°C DB
   Outdoor temperature ·7·°C DB / ·6·°C WB

3D126693A

# 5 Capacity tables

## 5 - 1 Capacity Table Legend

In order to fulfill more your requirements on quick access of data in the format you require, we have developed a tool to consult capacity tables.

Below you can find the link to the capacity table database and an overview of all the tools we have to help you select the correct product:

- **Capacity table database:** lets you find back and export quickly the capacity information you are looking for based upon unit model, refrigerant temperature and connection ratio.
- You can access the capacity table viewer here:
  https://my.daikin.eu/content/denv/en_US/home/applications/software-finder/capacity-table-viewer.html

- An overview of **all software tools** that we offer can be found here:
  https://my.daikin.eu/denv/en_US/home/applications/software-finder.html

# 5 Capacity tables

## 5 - 2 Cooling Capacity Tables



### 2MXF40A

Cooling ·(50Hz 230V)·

| ① | ② | Indoor air temperature [°C WB] | | | | | | | | | | | |
|---|---|---|---|---|---|---|---|---|---|---|---|---|---|
| | | 14°C | | 16°C | | 18°C | | 19°C | | 22°C | | 24°C | |
| | | TC | PI | TC | PI | TC | PI | TC | PI | TC | PI | TC | PI |
| | | kW | kW | kW | kW | kW | kW | kW | kW | kW | kW | kW | kW |
| 2,0 | 10,0 | 2,68 | 0,41 | 2,79 | 0,42 | 2,90 | 0,43 | 2,96 | 0,42 | 3,12 | 0,45 | 3,24 | 0,46 |
| | 12,0 | 2,64 | 0,42 | 2,75 | 0,43 | 2,86 | 0,44 | 2,91 | 0,43 | 3,08 | 0,46 | 3,19 | 0,45 |
| | 15,0 | 2,57 | 0,43 | 2,68 | 0,44 | 2,79 | 0,46 | 2,85 | 0,45 | 3,01 | 0,47 | 3,12 | 0,48 |
| | 18,0 | 2,50 | 0,44 | 2,61 | 0,46 | 2,72 | 0,47 | 2,78 | 0,47 | 2,95 | 0,48 | 3,06 | 0,49 |
| | 20,0 | 2,46 | 0,46 | 2,57 | 0,47 | 2,68 | 0,48 | 2,74 | 0,48 | 2,90 | 0,49 | 3,01 | 0,50 |
| | 22,0 | 2,41 | 0,47 | 2,52 | 0,48 | 2,64 | 0,49 | 2,69 | 0,49 | 2,86 | 0,50 | 2,97 | 0,51 |
| | 25,0 | 2,35 | 0,50 | 2,46 | 0,49 | 2,57 | 0,50 | 2,62 | 0,51 | 2,79 | 0,52 | 2,90 | 0,53 |
| | 28,0 | 2,28 | 0,50 | 2,39 | 0,51 | 2,50 | 0,52 | 2,56 | 0,53 | 2,72 | 0,54 | 2,83 | 0,55 |
| | 32,0 | 2,19 | 0,53 | 2,30 | 0,54 | 2,41 | 0,55 | 2,47 | 0,55 | 2,63 | 0,56 | 2,74 | 0,57 |
| | 35,0 | 2,12 | 0,55 | 2,23 | 0,56 | 2,34 | 0,57 | 2,40 | 0,57 | 2,57 | 0,58 | 2,68 | 0,59 |
| | 40,0 | 2,01 | 0,58 | 2,12 | 0,59 | 2,23 | 0,60 | 2,29 | 0,61 | 2,45 | 0,62 | 2,56 | 0,63 |
| | 43,0 | 1,94 | 0,60 | 2,06 | 0,61 | 2,17 | 0,62 | 2,22 | 0,63 | 2,39 | 0,64 | 2,50 | 0,66 |
| | 46,0 | 1,88 | 0,63 | 1,99 | 0,64 | 2,10 | 0,65 | 2,15 | 0,65 | 2,32 | 0,66 | 2,43 | 0,66 |
| 2,5 | 10,0 | 3,28 | 0,57 | 3,39 | 0,58 | 3,50 | 0,60 | 3,56 | 0,63 | 3,72 | 0,66 | 3,84 | 0,67 |
| | 12,0 | 3,24 | 0,58 | 3,35 | 0,60 | 3,46 | 0,62 | 3,51 | 0,65 | 3,68 | 0,67 | 3,79 | 0,68 |
| | 15,0 | 3,17 | 0,61 | 3,28 | 0,63 | 3,39 | 0,65 | 3,45 | 0,67 | 3,61 | 0,68 | 3,72 | 0,69 |
| | 18,0 | 3,10 | 0,65 | 3,21 | 0,67 | 3,32 | 0,68 | 3,38 | 0,68 | 3,55 | 0,69 | 3,66 | 0,70 |
| | 20,0 | 3,06 | 0,67 | 3,17 | 0,68 | 3,28 | 0,69 | 3,34 | 0,69 | 3,50 | 0,70 | 3,61 | 0,71 |
| | 22,0 | 3,01 | 0,68 | 3,12 | 0,69 | 3,24 | 0,70 | 3,29 | 0,70 | 3,46 | 0,71 | 3,57 | 0,72 |
| | 25,0 | 2,95 | 0,69 | 3,06 | 0,70 | 3,17 | 0,71 | 3,22 | 0,72 | 3,39 | 0,73 | 3,50 | 0,74 |
| | 28,0 | 2,88 | 0,71 | 2,99 | 0,72 | 3,10 | 0,73 | 3,16 | 0,74 | 3,32 | 0,75 | 3,43 | 0,76 |
| | 32,0 | 2,79 | 0,74 | 2,90 | 0,75 | 3,01 | 0,76 | 3,08 | 0,76 | 3,23 | 0,77 | 3,34 | 0,78 |
| | 35,0 | 2,72 | 0,76 | 2,83 | 0,77 | 2,94 | 0,78 | 3,00 | 0,80 | 3,17 | 0,79 | 3,28 | 0,80 |
| | 40,0 | 2,61 | 0,79 | 2,72 | 0,80 | 2,83 | 0,81 | 2,89 | 0,82 | 3,05 | 0,83 | 3,16 | 0,84 |
| | 43,0 | 2,54 | 0,81 | 2,66 | 0,82 | 2,77 | 0,83 | 2,82 | 0,84 | 2,99 | 0,85 | 3,10 | 0,86 |
| | 46,0 | 2,48 | 0,84 | 2,59 | 0,85 | 2,70 | 0,86 | 2,75 | 0,88 | 2,92 | 0,90 | 3,03 | 0,91 |
| 3,5 | 10,0 | 4,53 | 0,88 | 4,65 | 0,97 | 4,84 | 0,99 | 4,93 | 1,00 | 5,21 | 1,04 | 5,39 | 1,06 |
| | 12,0 | 4,46 | 0,91 | 4,58 | 0,99 | 4,76 | 1,01 | 4,86 | 1,02 | 5,13 | 1,06 | 5,32 | 1,08 |
| | 15,0 | 4,35 | 0,95 | 4,47 | 1,02 | 4,65 | 1,05 | 4,75 | 1,06 | 5,02 | 1,09 | 5,21 | 1,11 |
| | 18,0 | 4,24 | 1,00 | 4,36 | 1,06 | 4,54 | 1,08 | 4,63 | 1,09 | 4,91 | 1,12 | 5,09 | 1,15 |
| | 20,0 | 4,13 | 1,04 | 4,28 | 1,08 | 4,47 | 1,11 | 4,56 | 1,12 | 4,84 | 1,15 | 5,02 | 1,17 |
| | 22,0 | 4,02 | 1,08 | 4,21 | 1,11 | 4,39 | 1,13 | 4,48 | 1,14 | 4,76 | 1,17 | 4,94 | 1,20 |
| | 25,0 | 3,91 | 1,13 | 4,10 | 1,15 | 4,28 | 1,17 | 4,37 | 1,18 | 4,65 | 1,21 | 4,83 | 1,24 |
| | 28,0 | 3,80 | 1,17 | 3,98 | 1,19 | 4,17 | 1,21 | 4,26 | 1,22 | 4,54 | 1,26 | 4,72 | 1,28 |
| | 32,0 | 3,65 | 1,23 | 3,84 | 1,25 | 4,02 | 1,27 | 4,11 | 1,28 | 4,39 | 1,32 | 4,57 | 1,34 |
| | 35,0 | 3,54 | 1,28 | 3,72 | 1,30 | 3,91 | 1,32 | 4,00 | 1,35 | 4,28 | 1,36 | 4,46 | 1,39 |
| | 40,0 | 3,35 | 1,36 | 3,54 | 1,38 | 3,72 | 1,40 | 3,81 | 1,41 | 4,09 | 1,45 | 4,27 | 1,47 |
| | 43,0 | 3,24 | 1,41 | 3,43 | 1,44 | 3,61 | 1,46 | 3,70 | 1,47 | 3,93 | 1,47 | 4,08 | 1,47 |
| | 46,0 | 2,87 | 1,27 | 3,01 | 1,27 | 3,14 | 1,27 | 3,21 | 1,27 | 3,50 | 1,27 | 3,62 | 1,27 |

| ① | ② | Indoor air temperature [°C WB] | | | | | | | | | | | |
|---|---|---|---|---|---|---|---|---|---|---|---|---|---|
| | | 14°C | | 16°C | | 18°C | | 19°C | | 22°C | | 24°C | |
| | | TC | PI | TC | PI | TC | PI | TC | PI | TC | PI | TC | PI |
| | | kW | kW | kW | kW | kW | kW | kW | kW | kW | kW | kW | kW |
| 2.0+2.0 | 10,0 | 4,69 | 0,84 | 4,89 | 0,85 | 5,08 | 0,87 | 5,18 | 0,88 | 5,47 | 0,91 | 5,66 | 0,93 |
| | 12,0 | 4,62 | 0,85 | 4,81 | 0,87 | 5,00 | 0,89 | 5,10 | 0,90 | 5,39 | 0,92 | 5,58 | 0,94 |
| | 15,0 | 4,50 | 0,88 | 4,69 | 0,90 | 4,89 | 0,92 | 4,98 | 0,92 | 5,27 | 0,95 | 5,47 | 0,97 |
| | 18,0 | 4,38 | 0,91 | 4,57 | 0,93 | 4,77 | 0,94 | 4,86 | 0,95 | 5,16 | 0,98 | 5,35 | 1,00 |
| | 20,0 | 4,30 | 0,93 | 4,50 | 0,95 | 4,69 | 0,97 | 4,79 | 0,97 | 5,08 | 1,00 | 5,27 | 1,02 |
| | 22,0 | 4,22 | 0,95 | 4,42 | 0,97 | 4,61 | 0,99 | 4,71 | 1,00 | 5,00 | 1,02 | 5,19 | 1,04 |
| | 25,0 | 4,11 | 0,98 | 4,30 | 1,00 | 4,49 | 1,02 | 4,59 | 1,03 | 4,88 | 1,06 | 5,07 | 1,07 |
| | 28,0 | 3,99 | 1,02 | 4,18 | 1,04 | 4,38 | 1,05 | 4,47 | 1,06 | 4,76 | 1,09 | 4,96 | 1,11 |
| | 32,0 | 3,83 | 1,07 | 4,03 | 1,09 | 4,22 | 1,10 | 4,32 | 1,11 | 4,61 | 1,14 | 4,80 | 1,16 |
| | 35,0 | 3,72 | 1,10 | 3,91 | 1,11 | 4,10 | 1,13 | 4,20 | 1,20 | 4,49 | 1,18 | 4,68 | 1,20 |
| | 40,0 | 3,52 | 1,13 | 3,71 | 1,14 | 3,91 | 1,16 | 4,00 | 1,17 | 4,29 | 1,20 | 4,49 | 1,21 |
| | 43,0 | 3,40 | 1,17 | 3,60 | 1,19 | 3,79 | 1,20 | 3,89 | 1,21 | 4,18 | 1,24 | 4,37 | 1,26 |
| | 46,0 | 3,29 | 1,22 | 3,48 | 1,24 | 3,67 | 1,27 | 3,77 | 1,28 | 4,05 | 1,30 | 4,20 | 1,30 |
| 2.0+2.5 | 10,0 | 4,79 | 0,84 | 4,99 | 0,85 | 5,18 | 0,87 | 5,28 | 0,88 | 5,57 | 0,91 | 5,76 | 0,93 |
| | 12,0 | 4,72 | 0,85 | 4,91 | 0,87 | 5,10 | 0,89 | 5,20 | 0,90 | 5,49 | 0,92 | 5,68 | 0,94 |
| | 15,0 | 4,60 | 0,88 | 4,79 | 0,90 | 4,99 | 0,92 | 5,08 | 0,92 | 5,37 | 0,95 | 5,57 | 0,97 |
| | 18,0 | 4,48 | 0,91 | 4,67 | 0,93 | 4,87 | 0,94 | 4,96 | 0,95 | 5,26 | 0,98 | 5,45 | 1,00 |
| | 20,0 | 4,40 | 0,93 | 4,60 | 0,95 | 4,79 | 0,97 | 4,89 | 0,97 | 5,18 | 1,00 | 5,37 | 1,02 |
| | 22,0 | 4,32 | 0,95 | 4,52 | 0,97 | 4,71 | 0,99 | 4,81 | 1,00 | 5,10 | 1,02 | 5,29 | 1,04 |
| | 25,0 | 4,21 | 0,98 | 4,40 | 1,00 | 4,59 | 1,02 | 4,69 | 1,03 | 4,98 | 1,06 | 5,17 | 1,07 |
| | 28,0 | 4,09 | 1,02 | 4,28 | 1,04 | 4,48 | 1,05 | 4,57 | 1,06 | 4,86 | 1,09 | 5,06 | 1,11 |
| | 32,0 | 3,93 | 1,07 | 4,13 | 1,09 | 4,32 | 1,10 | 4,42 | 1,11 | 4,71 | 1,14 | 4,90 | 1,16 |
| | 35,0 | 3,82 | 1,10 | 4,01 | 1,11 | 4,20 | 1,13 | 4,30 | 1,20 | 4,59 | 1,18 | 4,78 | 1,20 |
| | 40,0 | 3,62 | 1,13 | 3,81 | 1,14 | 4,01 | 1,16 | 4,10 | 1,17 | 4,39 | 1,20 | 4,59 | 1,21 |
| | 43,0 | 3,50 | 1,17 | 3,70 | 1,19 | 3,89 | 1,20 | 3,99 | 1,21 | 4,28 | 1,24 | 4,47 | 1,26 |
| | 46,0 | 3,39 | 1,22 | 3,58 | 1,24 | 3,77 | 1,27 | 3,87 | 1,28 | 4,15 | 1,30 | 4,30 | 1,30 |

Symbols
TC: Total capacity [kW]
PI: Power input [kW]
①: Indoor unit combinations
②: Outdoor temperature [°C DB]

Notes
1. The capacities are based on the following conditions:
   Corresponding refrigerant piping length: ·5· m
   Level difference: ·0·m
2. The bold cells indicate the standard conditions.
3. The values above are for connecting with the following indoor unit types:
   ·2.0, 2.5, 3.5· kW class
   Wall-mounted ·FTXF-A, FTXF-B· series

3D126699A

# 5 Capacity tables

## 5 - 2 Cooling Capacity Tables



**2MXF40A**

Cooling ·(50Hz 230V)·

| ① | ② | Indoor air temperature [°C WB] | | | | | | | | | | | |
|---|---|---|---|---|---|---|---|---|---|---|---|---|---|
| | | 14°C | | 16°C | | 18°C | | 19°C | | 22°C | | 24°C | |
| | | TC | PI | TC | PI | TC | PI | TC | PI | TC | PI | TC | PI |
| | | kW | kW | kW | kW | kW | kW | kW | kW | kW | kW | kW | kW |
| 2.0+3.5 | 10,0 | 4,99 | 0,94 | 5,19 | 0,94 | 5,38 | 0,96 | 5,48 | 0,97 | 5,77 | 0,94 | 5,96 | 1,02 |
| | 12,0 | 4,87 | 0,94 | 5,11 | 0,96 | 5,30 | 0,98 | 5,40 | 0,99 | 5,69 | 0,95 | 5,88 | 1,03 |
| | 15,0 | 4,75 | 0,97 | 4,99 | 0,99 | 5,19 | 1,01 | 5,28 | 1,01 | 5,57 | 0,98 | 5,77 | 1,06 |
| | 18,0 | 4,63 | 1,00 | 4,87 | 1,02 | 5,07 | 1,03 | 5,16 | 1,04 | 5,46 | 1,01 | 5,65 | 1,09 |
| | 20,0 | 4,55 | 1,02 | 4,80 | 1,04 | 4,99 | 1,06 | 5,09 | 1,06 | 5,38 | 1,03 | 5,57 | 1,11 |
| | 22,0 | 4,47 | 1,04 | 4,72 | 1,06 | 4,91 | 1,08 | 5,01 | 1,09 | 5,30 | 1,05 | 5,49 | 1,13 |
| | 25,0 | 4,36 | 1,07 | 4,60 | 1,09 | 4,79 | 1,11 | 4,89 | 1,12 | 5,18 | 1,09 | 5,37 | 1,16 |
| | 28,0 | 4,24 | 1,11 | 4,48 | 1,13 | 4,63 | 1,14 | 4,77 | 1,15 | 5,06 | 1,12 | 5,26 | 1,20 |
| | 32,0 | 4,08 | 1,16 | 4,28 | 1,18 | 4,47 | 1,19 | 4,57 | 1,20 | 4,91 | 1,17 | 5,10 | 1,25 |
| | 35,0 | 3,97 | 1,19 | 4,16 | 1,20 | 4,35 | 1,22 | 4,50 | 1,29 | 4,79 | 1,21 | 4,98 | 1,29 |
| | 40,0 | 3,77 | 1,22 | 3,96 | 1,23 | 4,16 | 1,25 | 4,25 | 1,26 | 4,59 | 1,23 | 4,79 | 1,30 |
| | 43,0 | 3,65 | 1,26 | 3,85 | 1,28 | 4,04 | 1,29 | 4,14 | 1,30 | 4,48 | 1,27 | 4,67 | 1,35 |
| | 46,0 | 3,59 | 1,35 | 3,78 | 1,37 | 3,92 | 1,39 | 3,97 | 1,40 | 4,23 | 1,43 | 4,38 | 1,43 |
| 2.5+2.5 | 10,0 | 4,89 | 0,88 | 5,09 | 0,90 | 5,28 | 0,92 | 5,37 | 0,93 | 5,64 | 0,97 | 5,85 | 0,99 |
| | 12,0 | 4,81 | 0,90 | 5,01 | 0,92 | 5,18 | 0,94 | 5,29 | 0,95 | 5,55 | 0,99 | 5,77 | 1,01 |
| | 15,0 | 4,68 | 0,93 | 4,88 | 0,96 | 5,05 | 0,98 | 5,16 | 0,99 | 5,42 | 1,02 | 5,64 | 1,04 |
| | 18,0 | 4,55 | 0,97 | 4,75 | 0,99 | 4,92 | 1,01 | 5,03 | 1,02 | 5,30 | 1,05 | 5,51 | 1,07 |
| | 20,0 | 4,46 | 0,99 | 4,66 | 1,01 | 4,84 | 1,03 | 4,94 | 1,04 | 5,21 | 1,08 | 5,42 | 1,10 |
| | 22,0 | 4,38 | 1,02 | 4,58 | 1,04 | 4,75 | 1,06 | 4,86 | 1,07 | 5,12 | 1,10 | 5,34 | 1,12 |
| | 25,0 | 4,25 | 1,06 | 4,45 | 1,08 | 4,62 | 1,10 | 4,73 | 1,11 | 5,00 | 1,14 | 5,21 | 1,16 |
| | 28,0 | 4,12 | 1,10 | 4,32 | 1,12 | 4,49 | 1,14 | 4,60 | 1,15 | 4,87 | 1,18 | 5,08 | 1,20 |
| | 32,0 | 3,95 | 1,15 | 4,15 | 1,17 | 4,32 | 1,20 | 4,43 | 1,21 | 4,70 | 1,24 | 4,91 | 1,26 |
| | 35,0 | 3,82 | 1,19 | 4,02 | 1,21 | 4,19 | 1,23 | 4,40 | 1,25 | 4,57 | 1,28 | 4,78 | 1,30 |
| | 40,0 | 3,61 | 1,23 | 3,81 | 1,25 | 3,98 | 1,27 | 4,19 | 1,28 | 4,35 | 1,31 | 4,57 | 1,33 |
| | 43,0 | 3,48 | 1,28 | 3,68 | 1,30 | 3,85 | 1,32 | 4,06 | 1,33 | 4,23 | 1,36 | 4,44 | 1,39 |
| | 46,0 | 3,11 | 1,19 | 3,26 | 1,19 | 3,37 | 1,19 | 3,55 | 1,19 | 3,62 | 1,19 | 3,76 | 1,19 |
| 2.5+3.5 | 10,0 | 5,14 | 0,91 | 5,35 | 0,93 | 5,58 | 0,95 | 5,67 | 0,96 | 5,99 | 1,00 | 6,20 | 1,02 |
| | 12,0 | 5,06 | 0,93 | 5,27 | 0,95 | 5,48 | 0,97 | 5,59 | 0,98 | 5,90 | 1,02 | 6,12 | 1,04 |
| | 15,0 | 4,93 | 0,96 | 5,14 | 0,99 | 5,35 | 1,01 | 5,46 | 1,02 | 5,77 | 1,05 | 5,99 | 1,07 |
| | 18,0 | 4,80 | 1,00 | 5,01 | 1,02 | 5,22 | 1,04 | 5,33 | 1,05 | 5,65 | 1,08 | 5,86 | 1,10 |
| | 20,0 | 4,71 | 1,02 | 4,92 | 1,04 | 5,14 | 1,06 | 5,24 | 1,07 | 5,56 | 1,11 | 5,77 | 1,13 |
| | 22,0 | 4,63 | 1,05 | 4,84 | 1,07 | 5,05 | 1,09 | 5,16 | 1,10 | 5,47 | 1,13 | 5,69 | 1,15 |
| | 25,0 | 4,50 | 1,09 | 4,71 | 1,11 | 4,92 | 1,13 | 5,03 | 1,14 | 5,35 | 1,17 | 5,56 | 1,19 |
| | 28,0 | 4,37 | 1,13 | 4,58 | 1,15 | 4,79 | 1,17 | 4,90 | 1,18 | 5,22 | 1,21 | 5,43 | 1,23 |
| | 32,0 | 4,20 | 1,18 | 4,41 | 1,20 | 4,62 | 1,23 | 4,73 | 1,24 | 5,05 | 1,27 | 5,26 | 1,29 |
| | 35,0 | 4,07 | 1,23 | 4,28 | 1,25 | 4,49 | 1,27 | 4,60 | 1,28 | 4,92 | 1,31 | 5,13 | 1,33 |
| | 40,0 | 3,86 | 1,31 | 4,07 | 1,33 | 4,28 | 1,35 | 4,39 | 1,36 | 4,70 | 1,39 | 4,92 | 1,41 |
| | 43,0 | 3,73 | 1,36 | 3,94 | 1,38 | 4,15 | 1,40 | 4,26 | 1,41 | 4,58 | 1,44 | 4,79 | 1,47 |
| | 46,0 | 3,36 | 1,27 | 3,52 | 1,27 | 3,67 | 1,27 | 3,75 | 1,27 | 3,97 | 1,27 | 4,11 | 1,27 |

Symbols

TC: Total capacity [kW]
PI: Power input [kW]
①: Indoor unit combinations
②: Outdoor temperature [°C DB]

Notes

1. The capacities are based on the following conditions:
   Corresponding refrigerant piping length: ·5· m
   Level difference: ·0·m
2. The bold cells indicate the standard conditions.
3. The values above are for connecting with the following indoor unit types:
   ·2.0, 2.5, 3.5· kW class
   Wall-mounted ·FTXF-A, FTXF-B· series

**3D126700A**

# 5 Capacity tables

## 5 - 2 Cooling Capacity Tables



### 2MXF50A

Cooling ·(50Hz 230V)·

| ① | ② | Indoor air temperature [°C WB] | | | | | | | | | | | |
|---|---|---|---|---|---|---|---|---|---|---|---|---|---|
| | | 14°C | | 16°C | | 18°C | | 19°C | | 22°C | | 24°C | |
| | | TC | PI | TC | PI | TC | PI | TC | PI | TC | PI | TC | PI |
| | | kW | kW | kW | kW | kW | kW | kW | kW | kW | kW | kW | kW |
| 2,0 | 10,0 | 2,91 | 0,50 | 3,03 | 0,51 | 3,15 | 0,52 | 3,21 | 0,52 | 3,38 | 0,54 | 3,50 | 0,56 |
| | 12,0 | 2,86 | 0,51 | 2,98 | 0,52 | 3,10 | 0,52 | 3,16 | 0,54 | 3,34 | 0,55 | 3,46 | 0,56 |
| | 15,0 | 2,78 | 0,52 | 2,90 | 0,54 | 3,02 | 0,55 | 3,08 | 0,55 | 3,26 | 0,57 | 3,38 | 0,58 |
| | 18,0 | 2,71 | 0,55 | 2,83 | 0,55 | 2,95 | 0,56 | 3,01 | 0,57 | 3,19 | 0,58 | 3,31 | 0,59 |
| | 20,0 | 2,66 | 0,56 | 2,78 | 0,57 | 2,90 | 0,57 | 0,00 | 0,58 | 3,14 | 0,59 | 3,26 | 0,61 |
| | 22,0 | 2,62 | 0,57 | 2,74 | 0,58 | 2,85 | 0,59 | 2,91 | 0,59 | 3,09 | 0,61 | 3,21 | 0,62 |
| | 25,0 | 2,54 | 0,58 | 2,66 | 0,59 | 2,78 | 0,61 | 2,84 | 0,62 | 3,02 | 0,63 | 3,14 | 0,64 |
| | 28,0 | 2,47 | 0,61 | 2,59 | 0,62 | 2,71 | 0,63 | 2,77 | 0,64 | 2,95 | 0,65 | 3,07 | 0,67 |
| | 32,0 | 2,37 | 0,64 | 2,49 | 0,65 | 2,61 | 0,67 | 2,67 | 0,67 | 2,85 | 0,68 | 2,97 | 0,69 |
| | 35,0 | 2,30 | 0,67 | 2,42 | 0,68 | 2,54 | 0,69 | 2,60 | 0,69 | 2,78 | 0,70 | 2,90 | 0,71 |
| | 40,0 | 2,18 | 0,70 | 2,30 | 0,71 | 2,42 | 0,73 | 2,48 | 0,74 | 2,66 | 0,75 | 2,78 | 0,76 |
| | 43,0 | 2,11 | 0,74 | 2,23 | 0,74 | 2,35 | 0,75 | 2,41 | 0,76 | 2,59 | 0,77 | 2,71 | 0,79 |
| | 46,0 | 2,03 | 0,76 | 2,15 | 0,77 | 2,27 | 0,79 | 2,33 | 0,79 | 2,51 | 0,81 | 2,63 | 0,82 |
| 2,5 | 10,0 | 3,47 | 0,65 | 3,61 | 0,66 | 3,76 | 0,68 | 3,83 | 0,68 | 4,03 | 0,69 | 4,17 | 0,73 |
| | 12,0 | 3,41 | 0,66 | 3,55 | 0,68 | 3,70 | 0,68 | 3,77 | 0,69 | 3,98 | 0,71 | 4,13 | 0,73 |
| | 15,0 | 3,31 | 0,68 | 3,46 | 0,69 | 3,60 | 0,71 | 3,67 | 0,71 | 3,89 | 0,74 | 4,03 | 0,76 |
| | 18,0 | 3,23 | 0,71 | 3,37 | 0,71 | 3,52 | 0,73 | 3,59 | 0,74 | 3,80 | 0,76 | 3,95 | 0,77 |
| | 20,0 | 3,17 | 0,73 | 3,31 | 0,74 | 3,46 | 0,74 | 3,53 | 0,76 | 3,74 | 0,77 | 3,89 | 0,79 |
| | 22,0 | 3,12 | 0,74 | 3,27 | 0,76 | 3,40 | 0,77 | 3,47 | 0,77 | 3,68 | 0,79 | 3,83 | 0,80 |
| | 25,0 | 3,03 | 0,76 | 3,17 | 0,77 | 3,31 | 0,79 | 3,39 | 0,80 | 3,60 | 0,82 | 3,74 | 0,84 |
| | 28,0 | 2,95 | 0,79 | 3,09 | 0,80 | 3,23 | 0,82 | 3,30 | 0,84 | 3,52 | 0,85 | 3,66 | 0,87 |
| | 32,0 | 2,83 | 0,84 | 2,97 | 0,85 | 3,11 | 0,87 | 3,18 | 0,87 | 3,40 | 0,88 | 3,54 | 0,90 |
| | 35,0 | 2,74 | 0,87 | 2,89 | 0,88 | 3,03 | 0,90 | 3,10 | 0,92 | 3,31 | 0,92 | 3,46 | 0,93 |
| | 40,0 | 2,60 | 0,92 | 2,74 | 0,93 | 2,89 | 0,95 | 2,96 | 0,96 | 3,17 | 0,98 | 3,31 | 1,00 |
| | 43,0 | 2,52 | 0,96 | 2,66 | 0,96 | 2,80 | 0,98 | 2,87 | 1,00 | 3,09 | 1,01 | 3,23 | 1,03 |
| | 46,0 | 2,42 | 1,00 | 2,56 | 1,01 | 2,71 | 1,03 | 2,78 | 1,03 | 2,99 | 1,06 | 3,14 | 1,07 |
| 3,5 | 10,0 | 4,48 | 1,01 | 4,66 | 1,03 | 4,85 | 1,06 | 4,94 | 1,06 | 5,20 | 1,08 | 5,38 | 1,13 |
| | 12,0 | 4,40 | 1,03 | 4,58 | 1,06 | 4,77 | 1,06 | 4,86 | 1,08 | 5,14 | 1,11 | 5,32 | 1,13 |
| | 15,0 | 4,28 | 1,06 | 4,46 | 1,08 | 4,65 | 1,11 | 4,74 | 1,11 | 5,02 | 1,16 | 5,20 | 1,18 |
| | 18,0 | 4,17 | 1,11 | 4,35 | 1,11 | 4,54 | 1,13 | 4,63 | 1,16 | 4,91 | 1,18 | 5,09 | 1,20 |
| | 20,0 | 4,09 | 1,13 | 4,28 | 1,16 | 4,46 | 1,16 | 4,55 | 1,18 | 4,83 | 1,20 | 5,02 | 1,23 |
| | 22,0 | 4,03 | 1,16 | 4,22 | 1,18 | 4,38 | 1,20 | 4,48 | 1,20 | 4,75 | 1,23 | 4,94 | 1,25 |
| | 25,0 | 3,91 | 1,18 | 4,09 | 1,20 | 4,28 | 1,23 | 4,37 | 1,25 | 4,65 | 1,28 | 4,83 | 1,30 |
| | 28,0 | 3,80 | 1,23 | 3,98 | 1,25 | 4,17 | 1,28 | 4,26 | 1,30 | 4,54 | 1,33 | 4,72 | 1,35 |
| | 32,0 | 3,65 | 1,30 | 3,83 | 1,33 | 4,02 | 1,35 | 4,11 | 1,35 | 4,38 | 1,38 | 4,57 | 1,40 |
| | 35,0 | 3,54 | 1,35 | 3,72 | 1,38 | 3,91 | 1,40 | 4,00 | 1,42 | 4,28 | 1,42 | 4,46 | 1,45 |
| | 40,0 | 3,35 | 1,42 | 3,54 | 1,45 | 3,72 | 1,47 | 3,82 | 1,50 | 4,09 | 1,52 | 4,28 | 1,55 |
| | 43,0 | 3,25 | 1,50 | 3,43 | 1,50 | 3,62 | 1,52 | 3,71 | 1,55 | 3,98 | 1,57 | 4,17 | 1,60 |
| | 46,0 | 3,12 | 1,55 | 3,31 | 1,57 | 3,49 | 1,60 | 3,58 | 1,60 | 3,86 | 1,64 | 4,05 | 1,67 |

| ① | ② | Indoor air temperature [°C WB] | | | | | | | | | | | |
|---|---|---|---|---|---|---|---|---|---|---|---|---|---|
| | | 14°C | | 16°C | | 18°C | | 19°C | | 22°C | | 24°C | |
| | | TC | PI | TC | PI | TC | PI | TC | PI | TC | PI | TC | PI |
| | | kW | kW | kW | kW | kW | kW | kW | kW | kW | kW | kW | kW |
| 2.0+2.0 | 10,0 | 5,60 | 1,12 | 5,83 | 1,14 | 6,06 | 1,17 | 6,17 | 1,17 | 6,50 | 1,19 | 6,73 | 1,23 |
| | 12,0 | 5,50 | 1,14 | 5,73 | 1,17 | 5,96 | 1,16 | 6,08 | 1,19 | 6,42 | 1,21 | 6,65 | 1,23 |
| | 15,0 | 5,35 | 1,17 | 5,58 | 1,19 | 5,81 | 1,21 | 5,92 | 1,21 | 6,27 | 1,25 | 6,50 | 1,28 |
| | 18,0 | 5,21 | 1,21 | 5,44 | 1,21 | 5,67 | 1,23 | 5,79 | 1,25 | 6,13 | 1,28 | 6,37 | 1,30 |
| | 20,0 | 5,12 | 1,23 | 5,35 | 1,26 | 5,58 | 1,25 | 0,00 | 1,28 | 6,04 | 1,30 | 6,27 | 1,32 |
| | 22,0 | 5,04 | 1,26 | 5,27 | 1,28 | 5,48 | 1,30 | 5,60 | 1,30 | 5,94 | 1,32 | 6,17 | 1,34 |
| | 25,0 | 4,88 | 1,28 | 5,12 | 1,30 | 5,35 | 1,32 | 5,46 | 1,34 | 5,81 | 1,37 | 6,04 | 1,39 |
| | 28,0 | 4,75 | 1,32 | 4,98 | 1,34 | 5,21 | 1,37 | 5,33 | 1,39 | 5,67 | 1,41 | 5,90 | 1,43 |
| | 32,0 | 4,56 | 1,39 | 4,79 | 1,41 | 5,02 | 1,44 | 5,13 | 1,43 | 5,48 | 1,46 | 5,71 | 1,48 |
| | 35,0 | 4,42 | 1,43 | 4,65 | 1,46 | 4,88 | 1,48 | 5,00 | 1,48 | 5,35 | 1,50 | 5,58 | 1,52 |
| | 40,0 | 4,19 | 1,50 | 4,42 | 1,52 | 4,65 | 1,55 | 4,77 | 1,57 | 5,12 | 1,59 | 5,35 | 1,61 |
| | 43,0 | 4,06 | 1,57 | 4,29 | 1,57 | 4,52 | 1,59 | 4,63 | 1,61 | 4,98 | 1,63 | 5,21 | 1,66 |
| | 46,0 | 3,90 | 1,61 | 4,13 | 1,64 | 4,37 | 1,66 | 4,48 | 1,66 | 4,83 | 1,70 | 5,06 | 1,73 |
| 2.0+2.5 | 10,0 | 5,71 | 1,15 | 5,94 | 1,17 | 6,18 | 1,19 | 6,30 | 1,19 | 6,63 | 1,21 | 6,87 | 1,26 |
| | 12,0 | 5,61 | 1,17 | 5,85 | 1,19 | 6,08 | 1,19 | 6,20 | 1,21 | 6,55 | 1,24 | 6,79 | 1,26 |
| | 15,0 | 5,45 | 1,19 | 5,69 | 1,21 | 5,92 | 1,24 | 6,04 | 1,24 | 6,39 | 1,28 | 6,63 | 1,31 |
| | 18,0 | 5,32 | 1,24 | 5,55 | 1,24 | 5,79 | 1,26 | 5,90 | 1,28 | 6,26 | 1,31 | 6,49 | 1,33 |
| | 20,0 | 5,22 | 1,26 | 5,45 | 1,29 | 5,69 | 1,28 | 0,00 | 1,31 | 6,16 | 1,33 | 6,39 | 1,35 |
| | 22,0 | 5,14 | 1,29 | 5,37 | 1,31 | 5,59 | 1,33 | 5,71 | 1,33 | 6,06 | 1,35 | 6,30 | 1,37 |
| | 25,0 | 4,98 | 1,31 | 5,22 | 1,33 | 5,45 | 1,35 | 5,57 | 1,38 | 5,92 | 1,40 | 6,16 | 1,42 |
| | 28,0 | 4,85 | 1,35 | 5,08 | 1,37 | 5,32 | 1,40 | 5,43 | 1,42 | 5,79 | 1,45 | 6,02 | 1,47 |
| | 32,0 | 4,65 | 1,42 | 4,88 | 1,45 | 5,12 | 1,47 | 5,24 | 1,47 | 5,59 | 1,49 | 5,83 | 1,51 |
| | 35,0 | 4,51 | 1,47 | 4,75 | 1,49 | 4,98 | 1,51 | 5,10 | 1,51 | 5,45 | 1,53 | 5,69 | 1,56 |
| | 40,0 | 4,28 | 1,53 | 4,51 | 1,56 | 4,75 | 1,58 | 4,86 | 1,61 | 5,22 | 1,63 | 5,45 | 1,65 |
| | 43,0 | 4,14 | 1,61 | 4,37 | 1,60 | 4,61 | 1,63 | 4,73 | 1,65 | 5,08 | 1,67 | 5,32 | 1,70 |
| | 46,0 | 3,98 | 1,65 | 4,22 | 1,67 | 4,45 | 1,70 | 4,57 | 1,70 | 4,92 | 1,74 | 5,16 | 1,77 |

Symbols
TC: Total capacity [kW]
PI: Power input [kW]
①: Indoor unit combinations
②: Outdoor temperature [°C DB]

Notes
1. The capacities are based on the following conditions:
   Corresponding refrigerant piping length: ·5· m
   Level difference: ·0·m
2. The bold cells indicate the standard conditions.
3. The values above are for connecting with the following indoor unit types:
   ·2.0, 2.5, 3.5· kW class
   Wall-mounted ·FTXF-A, FTXF-B· series

3D126702A

### 2MXF50A

Cooling ·(50Hz 230V)·

| ① | ② | Indoor air temperature [°C WB] | | | | | | | | | | | |
|---|---|---|---|---|---|---|---|---|---|---|---|---|---|
| | | 14°C | | 16°C | | 18°C | | 19°C | | 22°C | | 24°C | |
| | | TC | PI | TC | PI | TC | PI | TC | PI | TC | PI | TC | PI |
| | | kW | kW | kW | kW | kW | kW | kW | kW | kW | kW | kW | kW |
| 2.0+3.5 | 10,0 | 6,04 | 1,30 | 6,28 | 1,32 | 6,53 | 1,35 | 6,66 | 1,36 | 7,03 | 1,39 | 7,28 | 1,44 |
| | 12,0 | 5,93 | 1,32 | 6,18 | 1,35 | 6,43 | 1,37 | 6,56 | 1,39 | 6,93 | 1,41 | 7,18 | 1,44 |
| | 15,0 | 5,78 | 1,36 | 6,03 | 1,39 | 6,28 | 1,40 | 6,41 | 1,41 | 6,78 | 1,45 | 7,03 | 1,48 |
| | 18,0 | 5,63 | 1,39 | 5,88 | 1,42 | 6,13 | 1,44 | 6,25 | 1,46 | 6,63 | 1,50 | 6,88 | 1,52 |
| | 20,0 | 5,53 | 1,42 | 5,78 | 1,45 | 6,03 | 1,47 | 6,15 | 1,49 | 6,53 | 1,51 | 6,78 | 1,54 |
| | 22,0 | 5,43 | 1,45 | 5,68 | 1,48 | 5,93 | 1,50 | 6,05 | 1,52 | 6,43 | 1,55 | 6,68 | 1,57 |
| | 25,0 | 5,28 | 1,50 | 5,53 | 1,53 | 5,78 | 1,54 | 5,90 | 1,55 | 6,28 | 1,59 | 6,52 | 1,62 |
| | 28,0 | 5,13 | 1,54 | 5,38 | 1,57 | 5,63 | 1,59 | 5,75 | 1,60 | 6,13 | 1,64 | 6,37 | 1,66 |
| | 32,0 | 4,93 | 1,61 | 5,18 | 1,64 | 5,43 | 1,66 | 5,55 | 1,67 | 5,92 | 1,70 | 6,17 | 1,73 |
| | 35,0 | 4,78 | 1,66 | 5,03 | 1,68 | 5,28 | 1,71 | 5,40 | 1,72 | 5,77 | 1,76 | 6,02 | 1,79 |
| | 40,0 | 4,53 | 1,76 | 4,78 | 1,78 | 5,02 | 1,80 | 5,15 | 1,81 | 5,52 | 1,85 | 5,77 | 1,88 |
| | 43,0 | 4,38 | 1,81 | 4,62 | 1,84 | 5,87 | 1,86 | 5,00 | 1,87 | 5,37 | 1,91 | 5,62 | 1,93 |
| | 46,0 | 4,22 | 1,88 | 4,47 | 1,90 | 4,72 | 1,93 | 4,85 | 1,93 | 5,22 | 1,97 | 5,47 | 1,99 |
| 2.5+2.5 | 10,0 | 5,92 | 1,24 | 6,17 | 1,26 | 6,41 | 1,28 | 6,53 | 1,29 | 6,90 | 1,33 | 7,14 | 1,37 |
| | 12,0 | 5,82 | 1,26 | 6,07 | 1,28 | 6,31 | 1,30 | 6,44 | 1,32 | 6,80 | 1,35 | 7,05 | 1,37 |
| | 15,0 | 5,68 | 1,29 | 5,92 | 1,32 | 6,17 | 1,34 | 6,29 | 1,35 | 6,65 | 1,39 | 6,90 | 1,41 |
| | 18,0 | 5,53 | 1,33 | 5,77 | 1,35 | 6,02 | 1,38 | 6,14 | 1,39 | 6,51 | 1,43 | 6,75 | 1,44 |
| | 20,0 | 5,43 | 1,35 | 5,67 | 1,38 | 5,92 | 1,40 | 6,04 | 1,42 | 6,41 | 1,45 | 6,65 | 1,47 |
| | 22,0 | 5,33 | 1,38 | 5,58 | 1,41 | 5,82 | 1,43 | 5,94 | 1,44 | 6,31 | 1,48 | 6,55 | 1,50 |
| | 25,0 | 5,18 | 1,43 | 5,43 | 1,45 | 5,67 | 1,47 | 5,79 | 1,49 | 6,16 | 1,51 | 6,40 | 1,54 |
| | 28,0 | 5,04 | 1,47 | 5,28 | 1,50 | 5,52 | 1,51 | 5,65 | 1,53 | 6,01 | 1,56 | 6,26 | 1,59 |
| | 32,0 | 4,84 | 1,53 | 5,08 | 1,56 | 5,33 | 1,58 | 5,45 | 1,60 | 5,81 | 1,62 | 6,06 | 1,65 |
| | 35,0 | 4,69 | 1,59 | 4,93 | 1,60 | 5,18 | 1,63 | 5,30 | 1,64 | 5,67 | 1,68 | 5,91 | 1,70 |
| | 40,0 | 4,44 | 1,68 | 4,69 | 1,69 | 4,93 | 1,72 | 5,05 | 1,73 | 5,42 | 1,77 | 5,66 | 1,78 |
| | 43,0 | 4,29 | 1,73 | 4,54 | 1,75 | 4,78 | 1,77 | 4,91 | 1,78 | 5,27 | 1,82 | 5,52 | 1,85 |
| | 46,0 | 4,15 | 1,78 | 4,39 | 1,81 | 4,63 | 1,84 | 4,76 | 1,85 | 5,12 | 1,88 | 5,37 | 1,90 |
| 2.5+3.5 | 10,0 | 6,04 | 1,24 | 6,28 | 1,27 | 6,53 | 1,29 | 6,66 | 1,30 | 7,03 | 1,34 | 7,28 | 1,39 |
| | 12,0 | 5,93 | 1,27 | 6,19 | 1,29 | 6,43 | 1,31 | 6,56 | 1,33 | 6,93 | 1,36 | 7,18 | 1,39 |
| | 15,0 | 5,78 | 1,30 | 6,03 | 1,33 | 6,28 | 1,34 | 6,40 | 1,36 | 6,77 | 1,39 | 7,03 | 1,42 |
| | 18,0 | 5,64 | 1,34 | 5,88 | 1,36 | 6,13 | 1,39 | 6,25 | 1,39 | 6,63 | 1,43 | 6,87 | 1,46 |
| | 20,0 | 5,53 | 1,37 | 5,78 | 1,39 | 6,03 | 1,41 | 6,16 | 1,42 | 6,53 | 1,45 | 6,77 | 1,48 |
| | 22,0 | 5,43 | 1,40 | 5,68 | 1,41 | 5,93 | 1,44 | 6,06 | 1,46 | 6,43 | 1,49 | 6,68 | 1,51 |
| | 25,0 | 5,28 | 1,44 | 5,53 | 1,45 | 5,78 | 1,48 | 5,90 | 1,50 | 6,27 | 1,53 | 6,53 | 1,55 |
| | 28,0 | 5,13 | 1,48 | 5,38 | 1,51 | 5,63 | 1,52 | 5,75 | 1,54 | 6,13 | 1,58 | 6,37 | 1,60 |
| | 32,0 | 4,93 | 1,54 | 5,17 | 1,57 | 5,43 | 1,59 | 5,55 | 1,60 | 5,92 | 1,63 | 6,18 | 1,66 |
| | 35,0 | 4,78 | 1,59 | 5,03 | 1,62 | 5,27 | 1,64 | 5,40 | 1,65 | 5,77 | 1,69 | 6,02 | 1,71 |
| | 40,0 | 4,53 | 1,69 | 4,77 | 1,71 | 5,03 | 1,73 | 5,14 | 1,75 | 5,52 | 1,78 | 5,77 | 1,80 |
| | 43,0 | 4,38 | 1,74 | 4,62 | 1,76 | 4,87 | 1,79 | 5,00 | 1,80 | 5,37 | 1,83 | 5,62 | 1,86 |
| | 46,0 | 4,22 | 1,80 | 4,48 | 1,82 | 4,72 | 1,85 | 4,85 | 1,86 | 5,22 | 1,89 | 5,47 | 1,92 |

| ① | ② | Indoor air temperature [°C WB] | | | | | | | | | | | |
|---|---|---|---|---|---|---|---|---|---|---|---|---|---|
| | | 14°C | | 16°C | | 18°C | | 19°C | | 22°C | | 24°C | |
| | | TC | PI | TC | PI | TC | PI | TC | PI | TC | PI | TC | PI |
| | | kW | kW | kW | kW | kW | kW | kW | kW | kW | kW | kW | kW |
| 3.5+3.5 | 10,0 | 6,04 | 1,23 | 6,28 | 1,25 | 6,53 | 1,27 | 6,66 | 1,29 | 7,03 | 1,31 | 7,28 | 1,36 |
| | 12,0 | 5,93 | 1,25 | 6,18 | 1,27 | 6,43 | 1,30 | 6,56 | 1,30 | 6,93 | 1,34 | 7,18 | 1,36 |
| | 15,0 | 5,78 | 1,29 | 6,03 | 1,30 | 6,28 | 1,33 | 6,41 | 1,34 | 6,78 | 1,38 | 7,03 | 1,40 |
| | 18,0 | 5,63 | 1,33 | 5,88 | 1,34 | 6,13 | 1,37 | 6,25 | 1,38 | 6,63 | 1,42 | 6,88 | 1,44 |
| | 20,0 | 5,53 | 1,34 | 5,78 | 1,37 | 6,03 | 1,39 | 6,15 | 1,41 | 6,53 | 1,43 | 6,78 | 1,46 |
| | 22,0 | 5,43 | 1,37 | 5,68 | 1,40 | 5,93 | 1,42 | 6,05 | 1,44 | 6,43 | 1,46 | 6,68 | 1,49 |
| | 25,0 | 5,28 | 1,42 | 5,53 | 1,43 | 5,78 | 1,46 | 5,90 | 1,47 | 6,28 | 1,51 | 6,52 | 1,53 |
| | 28,0 | 5,13 | 1,46 | 5,38 | 1,48 | 5,63 | 1,51 | 5,75 | 1,52 | 6,13 | 1,56 | 6,37 | 1,57 |
| | 32,0 | 4,93 | 1,53 | 5,18 | 1,54 | 5,43 | 1,57 | 5,55 | 1,58 | 5,92 | 1,61 | 6,17 | 1,64 |
| | 35,0 | 4,78 | 1,57 | 5,03 | 1,59 | 5,28 | 1,62 | 5,40 | 1,63 | 5,77 | 1,67 | 6,02 | 1,68 |
| | 40,0 | 4,53 | 1,65 | 4,78 | 1,68 | 5,02 | 1,70 | 5,15 | 1,72 | 5,52 | 1,75 | 5,77 | 1,78 |
| | 43,0 | 4,38 | 1,72 | 4,62 | 1,74 | 4,87 | 1,76 | 5,00 | 1,78 | 5,37 | 1,80 | 5,62 | 1,83 |
| | 46,0 | 4,22 | 1,78 | 4,47 | 1,79 | 4,72 | 1,82 | 4,85 | 1,83 | 5,22 | 1,87 | 5,47 | 1,89 |

Symbols
TC: Total capacity [kW]
PI: Power input [kW]
①: Indoor unit combinations
②: Outdoor temperature [°C DB]

Notes
1. The capacities are based on the following conditions:
   Corresponding refrigerant piping length: ·5· m
   Level difference: ·0·m
2. The bold cells indicate the standard conditions.
3. The values above are for connecting with the following indoor unit types:
   ·2.0, 2.5, 3.5· kW class
   Wall-mounted ·FTXF-A, FTXF-B· series

3D126703A

# 5 Capacity tables

## 5 - 3 Heating Capacity Tables

### 2MXF40A

Heating ·(50Hz 230V)·

| ① | ② | Indoor air temperature [°C DB] | | | | | | | | | | | |
|---|---|---|---|---|---|---|---|---|---|---|---|---|---|
| | | 16°C | | 18°C | | 20°C | | 21°C | | 22°C | | 24°C | |
| | | TC | PI | TC | PI | TC | PI | TC | PI | TC | PI | TC | PI |
| | | kW | kW | kW | kW | kW | kW | kW | kW | kW | kW | kW | kW |
| 2,0 | -15,0 | 2,05 | 1,00 | 1,99 | 1,01 | 1,94 | 1,02 | 1,92 | 1,03 | 1,89 | 1,04 | 1,84 | 1,05 |
| | -11,0 | 2,47 | 1,06 | 2,41 | 1,07 | 2,36 | 1,08 | 2,34 | 1,08 | 2,31 | 1,09 | 2,26 | 1,10 |
| | -6,0 | 2,88 | 1,11 | 2,83 | 1,12 | 2,78 | 1,13 | 2,76 | 1,13 | 2,73 | 1,14 | 2,68 | 1,15 |
| | 0,0 | 3,30 | 1,16 | 3,25 | 1,17 | 3,20 | 1,18 | 3,17 | 1,18 | 3,15 | 1,19 | 3,10 | 1,20 |
| | 6,0 | 3,80 | 1,22 | 3,75 | 1,23 | 3,70 | 1,26 | 3,67 | 1,25 | 3,65 | 1,25 | 3,60 | 1,26 |
| | 10,0 | 4,14 | 1,26 | 4,09 | 1,27 | 4,03 | 1,28 | 4,01 | 1,29 | 3,98 | 1,29 | 3,93 | 1,30 |
| | 15,0 | 4,55 | 1,31 | 4,50 | 1,32 | 4,45 | 1,33 | 4,43 | 1,34 | 4,40 | 1,34 | 4,35 | 1,35 |
| 2,5 | -15,0 | 2,45 | 1,28 | 2,34 | 1,29 | 2,29 | 1,30 | 2,27 | 1,31 | 2,24 | 1,32 | 2,19 | 1,32 |
| | -11,0 | 2,67 | 1,30 | 2,61 | 1,31 | 2,56 | 1,32 | 2,54 | 1,32 | 2,51 | 1,33 | 2,46 | 1,34 |
| | -6,0 | 3,28 | 1,35 | 3,13 | 1,36 | 3,08 | 1,37 | 3,06 | 1,37 | 3,03 | 1,38 | 2,98 | 1,39 |
| | 0,0 | 3,70 | 1,40 | 3,65 | 1,41 | 3,60 | 1,42 | 3,57 | 1,42 | 3,55 | 1,43 | 3,50 | 1,44 |
| | 6,0 | 4,20 | 1,46 | 4,15 | 1,47 | 4,10 | 1,50 | 4,07 | 1,49 | 4,05 | 1,49 | 4,00 | 1,50 |
| | 10,0 | 4,54 | 1,50 | 4,49 | 1,51 | 4,43 | 1,52 | 4,41 | 1,53 | 4,38 | 1,53 | 4,33 | 1,54 |
| | 15,0 | 4,55 | 1,51 | 4,50 | 1,52 | 4,45 | 1,53 | 4,43 | 1,54 | 4,40 | 1,54 | 4,35 | 1,55 |
| 3,5 | -15,0 | 2,64 | 1,50 | 2,58 | 1,51 | 2,53 | 1,52 | 2,50 | 1,53 | 2,47 | 1,54 | 2,42 | 1,55 |
| | -11,0 | 2,93 | 1,51 | 2,87 | 1,52 | 2,81 | 1,53 | 2,78 | 1,54 | 2,75 | 1,55 | 2,69 | 1,56 |
| | -6,0 | 3,43 | 1,52 | 3,37 | 1,54 | 3,31 | 1,55 | 3,28 | 1,56 | 3,25 | 1,57 | 3,19 | 1,59 |
| | 0,0 | 3,93 | 1,59 | 3,86 | 1,61 | 3,80 | 1,62 | 3,77 | 1,63 | 3,74 | 1,64 | 3,68 | 1,66 |
| | 6,0 | 4,52 | 1,68 | 4,46 | 1,69 | 4,40 | 1,73 | 4,37 | 1,72 | 4,34 | 1,73 | 4,28 | 1,74 |
| | 10,0 | 4,92 | 1,74 | 4,86 | 1,75 | 4,80 | 1,76 | 4,77 | 1,77 | 4,74 | 1,78 | 4,68 | 1,80 |
| | 15,0 | 4,94 | 1,75 | 4,88 | 1,76 | 4,82 | 1,77 | 4,79 | 1,78 | 4,76 | 1,79 | 4,70 | 1,80 |
| 2.0+2.0 | -15,0 | 2,50 | 0,93 | 2,48 | 0,93 | 2,42 | 0,94 | 2,39 | 0,95 | 2,35 | 0,95 | 2,29 | 0,96 |
| | -11,0 | 3,06 | 0,97 | 3,00 | 0,98 | 2,94 | 0,99 | 2,91 | 1,00 | 2,87 | 1,00 | 2,81 | 1,01 |
| | -6,0 | 3,58 | 1,02 | 3,52 | 1,03 | 3,46 | 1,04 | 3,43 | 1,04 | 3,39 | 1,05 | 3,33 | 1,06 |
| | 0,0 | 4,10 | 1,06 | 4,04 | 1,07 | 3,98 | 1,08 | 3,94 | 1,09 | 3,91 | 1,09 | 3,85 | 1,10 |
| | 6,0 | 4,73 | 1,12 | 4,66 | 1,13 | 4,60 | 1,14 | 4,57 | 1,15 | 4,54 | 1,15 | 4,47 | 1,16 |
| | 10,0 | 5,14 | 1,16 | 5,08 | 1,17 | 5,02 | 1,18 | 4,98 | 1,18 | 4,95 | 1,19 | 4,89 | 1,20 |
| | 15,0 | 5,86 | 1,20 | 5,60 | 1,22 | 5,53 | 1,23 | 5,50 | 1,24 | 5,47 | 1,24 | 5,41 | 1,25 |
| 2.0+2.5 | -15,0 | 2,60 | 0,94 | 2,58 | 0,95 | 2,48 | 0,96 | 2,44 | 0,96 | 2,39 | 0,97 | 2,33 | 0,98 |
| | -11,0 | 3,16 | 0,98 | 3,10 | 0,99 | 3,01 | 1,00 | 2,96 | 1,01 | 2,92 | 1,01 | 2,86 | 1,02 |
| | -6,0 | 3,68 | 1,03 | 3,62 | 1,04 | 3,53 | 1,05 | 3,50 | 1,05 | 3,46 | 1,06 | 3,40 | 1,07 |
| | 0,0 | 4,20 | 1,07 | 4,14 | 1,08 | 4,05 | 1,09 | 4,01 | 1,10 | 3,98 | 1,10 | 3,92 | 1,11 |
| | 6,0 | 4,83 | 1,13 | 4,76 | 1,14 | 4,70 | 1,16 | 4,67 | 1,16 | 4,64 | 1,16 | 4,57 | 1,17 |
| | 10,0 | 5,24 | 1,17 | 5,18 | 1,18 | 5,12 | 1,19 | 5,08 | 1,19 | 5,05 | 1,20 | 4,99 | 1,21 |
| | 15,0 | 5,96 | 1,21 | 5,70 | 1,22 | 5,63 | 1,23 | 5,60 | 1,24 | 5,57 | 1,24 | 5,51 | 1,25 |

| ① | ② | Indoor air temperature [°C DB] | | | | | | | | | | | |
|---|---|---|---|---|---|---|---|---|---|---|---|---|---|
| | | 16°C | | 18°C | | 20°C | | 21°C | | 22°C | | 24°C | |
| | | TC | PI | TC | PI | TC | PI | TC | PI | TC | PI | TC | PI |
| | | kW | kW | kW | kW | kW | kW | kW | kW | kW | kW | kW | kW |
| 2.0+3.5 | -15,0 | 2,70 | 0,94 | 2,68 | 0,95 | 2,62 | 0,96 | 2,60 | 0,96 | 2,55 | 0,97 | 2,49 | 0,98 |
| | -11,0 | 3,26 | 0,98 | 3,20 | 0,99 | 3,14 | 1,00 | 3,11 | 1,01 | 3,07 | 1,01 | 3,01 | 1,02 |
| | -6,0 | 3,78 | 1,03 | 3,72 | 1,04 | 3,66 | 1,05 | 3,63 | 1,05 | 3,59 | 1,06 | 3,53 | 1,07 |
| | 0,0 | 4,30 | 1,07 | 4,24 | 1,08 | 4,18 | 1,09 | 4,14 | 1,10 | 4,11 | 1,10 | 4,05 | 1,11 |
| | 6,0 | 4,93 | 1,13 | 4,86 | 1,14 | 4,80 | 1,16 | 4,77 | 1,16 | 4,74 | 1,16 | 4,67 | 1,17 |
| | 10,0 | 5,34 | 1,17 | 5,28 | 1,18 | 5,22 | 1,19 | 5,18 | 1,19 | 5,15 | 1,20 | 5,09 | 1,21 |
| | 15,0 | 6,06 | 1,21 | 5,80 | 1,22 | 5,73 | 1,23 | 5,70 | 1,24 | 5,67 | 1,24 | 5,61 | 1,25 |
| 2.5+2.5 | -15,0 | 2,58 | 0,91 | 2,55 | 0,92 | 2,49 | 0,93 | 2,44 | 0,94 | 2,41 | 0,95 | 2,34 | 0,96 |
| | -11,0 | 3,13 | 0,96 | 3,08 | 0,98 | 3,02 | 0,99 | 2,97 | 1,00 | 2,94 | 1,00 | 2,87 | 1,01 |
| | -6,0 | 3,66 | 1,01 | 3,59 | 1,02 | 3,53 | 1,03 | 3,50 | 1,04 | 3,47 | 1,04 | 3,40 | 1,06 |
| | 0,0 | 4,19 | 1,06 | 4,12 | 1,07 | 4,06 | 1,08 | 4,03 | 1,09 | 4,00 | 1,09 | 3,93 | 1,10 |
| | 6,0 | 4,83 | 1,12 | 4,77 | 1,13 | 4,70 | 1,14 | 4,67 | 1,15 | 4,64 | 1,15 | 4,57 | 1,16 |
| | 10,0 | 5,19 | 1,16 | 5,15 | 1,17 | 5,12 | 1,18 | 5,09 | 1,18 | 5,06 | 1,19 | 4,99 | 1,20 |
| | 15,0 | 5,88 | 1,19 | 5,77 | 1,22 | 5,66 | 1,23 | 5,62 | 1,23 | 5,59 | 1,24 | 5,53 | 1,25 |
| 2.5+3.5 | -15,0 | 2,70 | 0,93 | 2,69 | 0,93 | 2,62 | 0,95 | 2,59 | 0,95 | 2,56 | 0,96 | 2,49 | 0,97 |
| | -11,0 | 3,28 | 0,97 | 3,22 | 0,98 | 3,15 | 0,99 | 3,12 | 1,00 | 3,09 | 1,00 | 3,02 | 1,01 |
| | -6,0 | 3,81 | 1,02 | 3,75 | 1,03 | 3,68 | 1,04 | 3,65 | 1,04 | 3,62 | 1,05 | 3,55 | 1,06 |
| | 0,0 | 4,34 | 1,06 | 4,28 | 1,07 | 4,21 | 1,09 | 4,18 | 1,09 | 4,15 | 1,10 | 4,08 | 1,11 |
| | 6,0 | 4,98 | 1,12 | 4,91 | 1,13 | 4,80 | 1,14 | 4,75 | 1,15 | 4,74 | 1,15 | 4,72 | 1,16 |
| | 10,0 | 5,40 | 1,16 | 5,34 | 1,17 | 5,27 | 1,18 | 5,24 | 1,18 | 5,21 | 1,19 | 5,14 | 1,20 |
| | 15,0 | 6,09 | 1,19 | 5,87 | 1,22 | 5,81 | 1,23 | 5,77 | 1,23 | 5,74 | 1,24 | 5,68 | 1,25 |

Symbols
- TC: Total capacity [kW]
- PI: Power input [kW]
- ①: Indoor unit combinations
- ②: Outdoor temperature [°C WB]

Notes
1. The capacities are based on the following conditions:
   Corresponding refrigerant piping length: ·5· m
   Level difference: ·0·m
2. The bold cells indicate the standard conditions.
3. The values above are for connecting with the following indoor unit types:
   ·2.0, 2.5, 3.5· kW class
   Wall-mounted ·FTXF-A, FTXF-B· series
4. The heating capacity does not include the capacity drop that occurs during a frosting period and defrost operation.

**3D126701A**

### 2MXF50A

Heating ·(50Hz 230V·

| ① | ② | Indoor air temperature [°C DB] | | | | | | | | | | | |
|---|---|---|---|---|---|---|---|---|---|---|---|---|---|
| | | 16°C | | 18°C | | 20°C | | 21°C | | 22°C | | 24°C | |
| | | TC | PI | TC | PI | TC | PI | TC | PI | TC | PI | TC | PI |
| | | kW | kW | kW | kW | kW | kW | kW | kW | kW | kW | kW | kW |
| 2,0 | -15,0 | 2,05 | 0,85 | 1,99 | 0,86 | 1,94 | 0,87 | 1,92 | 0,88 | 1,89 | 0,89 | 1,84 | 0,90 |
| | -11,0 | 2,47 | 0,93 | 2,41 | 0,94 | 2,36 | 0,95 | 2,34 | 0,96 | 2,31 | 0,96 | 2,26 | 0,97 |
| | -6,0 | 2,88 | 0,99 | 2,83 | 1,00 | 2,78 | 1,01 | 2,76 | 1,01 | 2,73 | 1,02 | 2,68 | 1,02 |
| | 0,0 | 3,30 | 1,05 | 3,25 | 1,06 | 3,20 | 1,07 | 3,17 | 1,07 | 3,15 | 1,08 | 3,10 | 1,09 |
| | 6,0 | 3,80 | 1,11 | 3,75 | 1,12 | 3,70 | 1,13 | 3,67 | 1,13 | 3,65 | 1,14 | 3,60 | 1,15 |
| | 10,0 | 4,14 | 1,15 | 4,09 | 1,16 | 4,03 | 1,17 | 4,01 | 1,17 | 3,98 | 1,18 | 3,93 | 1,19 |
| | 15,0 | 4,55 | 1,19 | 4,50 | 1,20 | 4,45 | 1,21 | 4,43 | 1,21 | 4,40 | 1,22 | 4,35 | 1,23 |
| 2,5 | -15,0 | 2,45 | 1,18 | 2,34 | 1,19 | 2,29 | 1,20 | 2,27 | 1,20 | 2,24 | 1,21 | 2,19 | 1,22 |
| | -11,0 | 2,67 | 1,20 | 2,61 | 1,21 | 2,56 | 1,22 | 2,54 | 1,22 | 2,51 | 1,22 | 2,46 | 1,23 |
| | -6,0 | 3,28 | 1,24 | 3,13 | 1,25 | 3,08 | 1,26 | 3,06 | 1,26 | 3,03 | 1,27 | 2,98 | 1,28 |
| | 0,0 | 3,70 | 1,29 | 3,65 | 1,30 | 3,60 | 1,31 | 3,57 | 1,31 | 3,55 | 1,31 | 3,50 | 1,32 |
| | 6,0 | 4,20 | 1,34 | 4,15 | 1,35 | 4,10 | 1,34 | 4,07 | 1,36 | 4,05 | 1,37 | 4,00 | 1,38 |
| | 10,0 | 4,54 | 1,38 | 4,49 | 1,39 | 4,43 | 1,40 | 4,41 | 1,40 | 4,38 | 1,41 | 4,33 | 1,42 |
| | 15,0 | 4,95 | 1,42 | 4,90 | 1,43 | 4,85 | 1,44 | 4,83 | 1,44 | 4,80 | 1,45 | 4,75 | 1,46 |
| 3,5 | -15,0 | 2,64 | 1,30 | 2,58 | 1,31 | 2,53 | 1,32 | 2,50 | 1,33 | 2,47 | 1,34 | 2,42 | 1,35 |
| | -11,0 | 2,93 | 1,31 | 2,87 | 1,32 | 2,81 | 1,33 | 2,78 | 1,34 | 2,75 | 1,35 | 2,69 | 1,36 |
| | -6,0 | 3,43 | 1,36 | 3,37 | 1,37 | 3,31 | 1,38 | 3,28 | 1,39 | 3,25 | 1,39 | 3,19 | 1,41 |
| | 0,0 | 4,00 | 1,44 | 3,94 | 1,45 | 3,87 | 1,47 | 3,84 | 1,47 | 3,81 | 1,48 | 3,75 | 1,49 |
| | 6,0 | 4,73 | 1,52 | 4,66 | 1,54 | 4,60 | 1,53 | 4,58 | 1,56 | 4,54 | 1,56 | 4,47 | 1,58 |
| | 10,0 | 5,14 | 1,57 | 5,08 | 1,58 | 5,02 | 1,60 | 4,98 | 1,60 | 4,95 | 1,61 | 4,89 | 1,62 |
| | 15,0 | 5,66 | 1,63 | 5,60 | 1,65 | 5,53 | 1,66 | 5,50 | 1,66 | 5,47 | 1,67 | 5,38 | 1,67 |
| 2.0+2.0 | -15,0 | 2,51 | 1,21 | 2,49 | 1,21 | 2,43 | 1,22 | 2,40 | 1,24 | 2,36 | 1,24 | 2,30 | 1,25 |
| | -11,0 | 3,15 | 1,26 | 3,08 | 1,28 | 3,00 | 1,29 | 2,96 | 1,29 | 2,92 | 1,30 | 2,84 | 1,31 |
| | -6,0 | 4,06 | 1,34 | 3,98 | 1,36 | 3,90 | 1,37 | 3,86 | 1,37 | 3,82 | 1,38 | 3,74 | 1,39 |
| | 0,0 | 4,96 | 1,42 | 4,88 | 1,44 | 4,80 | 1,45 | 4,76 | 1,46 | 4,72 | 1,46 | 4,64 | 1,47 |
| | 6,0 | 5,86 | 1,50 | 5,78 | 1,52 | 5,70 | 1,53 | 5,66 | 1,54 | 5,62 | 1,54 | 5,54 | 1,56 |
| | 10,0 | 6,37 | 1,55 | 6,29 | 1,56 | 6,21 | 1,58 | 6,18 | 1,58 | 6,14 | 1,59 | 6,06 | 1,60 |
| | 15,0 | 7,02 | 1,61 | 6,94 | 1,62 | 6,86 | 1,63 | 6,82 | 1,64 | 6,78 | 1,65 | 6,70 | 1,66 |
| 2.0+2.5 | -15,0 | 2,61 | 1,23 | 2,59 | 1,24 | 2,49 | 1,25 | 2,45 | 1,27 | 2,40 | 1,27 | 2,34 | 1,28 |
| | -11,0 | 3,25 | 1,28 | 3,18 | 1,30 | 3,10 | 1,31 | 3,06 | 1,31 | 3,02 | 1,32 | 2,94 | 1,33 |
| | -6,0 | 4,16 | 1,36 | 4,08 | 1,38 | 4,00 | 1,39 | 3,96 | 1,39 | 3,92 | 1,40 | 3,84 | 1,41 |
| | 0,0 | 5,06 | 1,44 | 4,98 | 1,46 | 4,90 | 1,47 | 4,86 | 1,48 | 4,82 | 1,48 | 4,74 | 1,49 |
| | 6,0 | 5,96 | 1,52 | 5,88 | 1,54 | 5,80 | 1,55 | 5,76 | 1,56 | 5,72 | 1,56 | 5,64 | 1,58 |
| | 10,0 | 6,47 | 1,57 | 6,39 | 1,58 | 6,31 | 1,60 | 6,28 | 1,60 | 6,24 | 1,61 | 6,16 | 1,62 |
| | 15,0 | 7,12 | 1,63 | 7,04 | 1,64 | 6,96 | 1,65 | 6,92 | 1,66 | 6,88 | 1,67 | 6,80 | 1,68 |

| ① | ② | Indoor air temperature [°C DB] | | | | | | | | | | | |
|---|---|---|---|---|---|---|---|---|---|---|---|---|---|
| | | 16°C | | 18°C | | 20°C | | 21°C | | 22°C | | 24°C | |
| | | TC | PI | TC | PI | TC | PI | TC | PI | TC | PI | TC | PI |
| | | kW | kW | kW | kW | kW | kW | kW | kW | kW | kW | kW | kW |
| 2.0+3.5 | -15,0 | 2,71 | 1,23 | 2,69 | 1,24 | 2,63 | 1,25 | 2,61 | 1,27 | 2,56 | 1,27 | 2,50 | 1,27 |
| | -11,0 | 3,29 | 1,30 | 3,23 | 1,32 | 3,17 | 1,33 | 3,14 | 1,34 | 3,10 | 1,34 | 3,04 | 1,34 |
| | -6,0 | 4,20 | 1,37 | 4,12 | 1,39 | 4,03 | 1,40 | 3,99 | 1,41 | 3,95 | 1,41 | 3,87 | 1,42 |
| | 0,0 | 5,13 | 1,45 | 5,05 | 1,47 | 4,97 | 1,48 | 4,93 | 1,49 | 4,89 | 1,49 | 4,80 | 1,50 |
| | 6,0 | 6,06 | 1,53 | 5,98 | 1,55 | 5,90 | 1,56 | 5,86 | 1,57 | 5,82 | 1,57 | 5,74 | 1,59 |
| | 10,0 | 6,60 | 1,58 | 6,51 | 1,59 | 6,43 | 1,61 | 6,39 | 1,61 | 6,35 | 1,62 | 6,27 | 1,63 |
| | 15,0 | 7,26 | 1,64 | 7,18 | 1,65 | 7,10 | 1,66 | 7,06 | 1,67 | 7,02 | 1,68 | 6,94 | 1,69 |
| 2.5+2.5 | -15,0 | 2,65 | 1,22 | 2,56 | 1,23 | 2,54 | 1,24 | 2,45 | 1,25 | 2,42 | 1,26 | 2,35 | 1,27 |
| | -11,0 | 3,30 | 1,28 | 3,18 | 1,30 | 3,12 | 1,31 | 3,06 | 1,31 | 3,02 | 1,32 | 2,94 | 1,33 |
| | -6,0 | 4,23 | 1,36 | 4,08 | 1,38 | 4,00 | 1,39 | 3,96 | 1,39 | 3,92 | 1,40 | 3,84 | 1,41 |
| | 0,0 | 5,14 | 1,44 | 4,98 | 1,46 | 4,90 | 1,47 | 4,86 | 1,48 | 4,82 | 1,48 | 4,74 | 1,49 |
| | 6,0 | 6,06 | 1,52 | 5,88 | 1,54 | 5,80 | 1,55 | 5,76 | 1,56 | 5,72 | 1,56 | 5,64 | 1,58 |
| | 10,0 | 6,58 | 1,57 | 6,39 | 1,58 | 6,31 | 1,60 | 6,28 | 1,60 | 6,24 | 1,61 | 6,16 | 1,62 |
| | 15,0 | 7,24 | 1,63 | 7,04 | 1,64 | 6,96 | 1,65 | 6,92 | 1,66 | 6,88 | 1,67 | 6,80 | 1,68 |
| 2.5+3.5 | -15,0 | 2,71 | 1,27 | 2,70 | 1,28 | 2,63 | 1,29 | 2,60 | 1,30 | 2,57 | 1,31 | 2,50 | 1,32 |
| | -11,0 | 3,36 | 1,35 | 3,28 | 1,37 | 3,20 | 1,38 | 3,16 | 1,39 | 3,12 | 1,39 | 3,04 | 1,40 |
| | -6,0 | 4,30 | 1,43 | 4,22 | 1,45 | 4,13 | 1,46 | 4,09 | 1,47 | 4,05 | 1,47 | 3,97 | 1,48 |
| | 0,0 | 5,23 | 1,51 | 5,15 | 1,53 | 5,07 | 1,54 | 5,03 | 1,55 | 4,99 | 1,55 | 4,90 | 1,56 |
| | 6,0 | 6,16 | 1,59 | 6,08 | 1,61 | 6,00 | 1,59 | 5,96 | 1,63 | 5,92 | 1,63 | 5,84 | 1,65 |
| | 10,0 | 6,70 | 1,64 | 6,61 | 1,65 | 6,53 | 1,67 | 6,49 | 1,67 | 6,45 | 1,68 | 6,37 | 1,69 |
| | 15,0 | 7,36 | 1,70 | 7,28 | 1,71 | 7,20 | 1,72 | 7,16 | 1,73 | 7,12 | 1,74 | 7,04 | 1,74 |
| 3.5+3.5 | -15,0 | 2,68 | 1,58 | 2,60 | 1,58 | 2,51 | 1,60 | 2,46 | 1,61 | 2,42 | 1,62 | 2,34 | 1,64 |
| | -11,0 | 3,38 | 1,38 | 3,29 | 1,39 | 3,21 | 1,41 | 3,16 | 1,41 | 3,12 | 1,42 | 3,04 | 1,43 |
| | -6,0 | 4,34 | 1,47 | 4,26 | 1,48 | 4,17 | 1,49 | 4,13 | 1,50 | 4,09 | 1,50 | 4,00 | 1,52 |
| | 0,0 | 5,30 | 1,55 | 5,22 | 1,56 | 5,14 | 1,58 | 5,09 | 1,58 | 5,05 | 1,59 | 4,97 | 1,60 |
| | 6,0 | 6,27 | 1,63 | 6,18 | 1,65 | 6,10 | 1,61 | 6,06 | 1,67 | 6,02 | 1,67 | 5,93 | 1,69 |
| | 10,0 | 6,82 | 1,68 | 6,74 | 1,69 | 6,65 | 1,71 | 6,61 | 1,71 | 6,57 | 1,72 | 6,48 | 1,73 |
| | 15,0 | 7,51 | 1,74 | 7,42 | 1,76 | 7,34 | 1,77 | 7,30 | 1,77 | 7,26 | 1,78 | 7,17 | 1,79 |

Symbols
- TC: Total capacity [kW]
- PI: Power input [kW]
- ①: Indoor unit combinations
- ②: Outdoor temperature [°C WB]

Notes
1. The capacities are based on the following conditions:
   Corresponding refrigerant piping length: ·5· m
   Level difference: ·0·m
2. The bold cells indicate the standard conditions.
3. The values above are for connecting with the following indoor unit types:
   ·2.0, 2.5, 3.5· kW class
   Wall-mounted ·FTXF-A, FTXF-B· series
4. The heating capacity does not include the capacity drop that occurs during a frosting period and defrost operation.

**3D126704A**

# 6 Dimensional drawings

## 6 - 1 Dimensional Drawings



**2MXF-A**

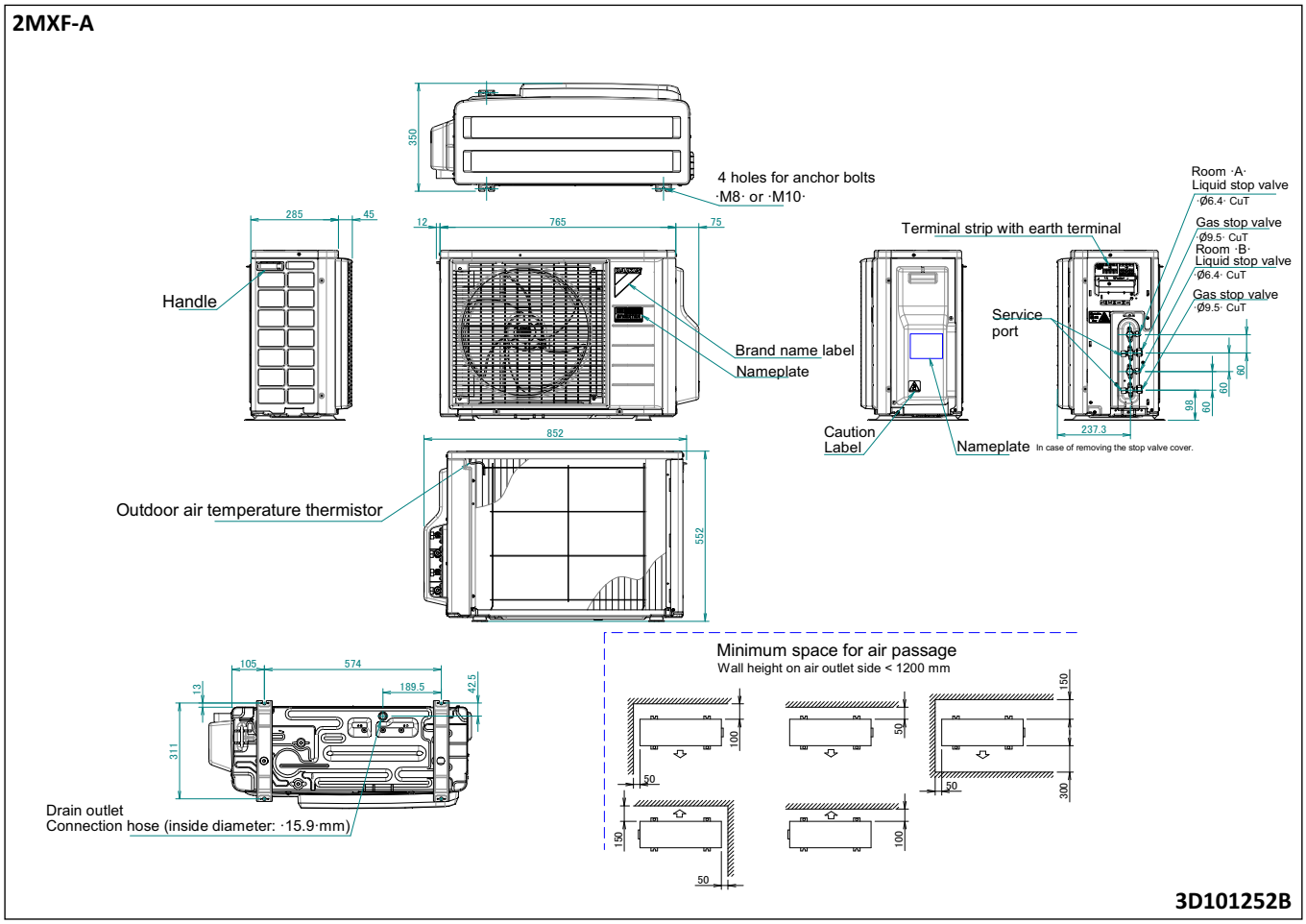

# 7 Centre of gravity

## 7 - 1 Centre of Gravity

**2MXF-A**

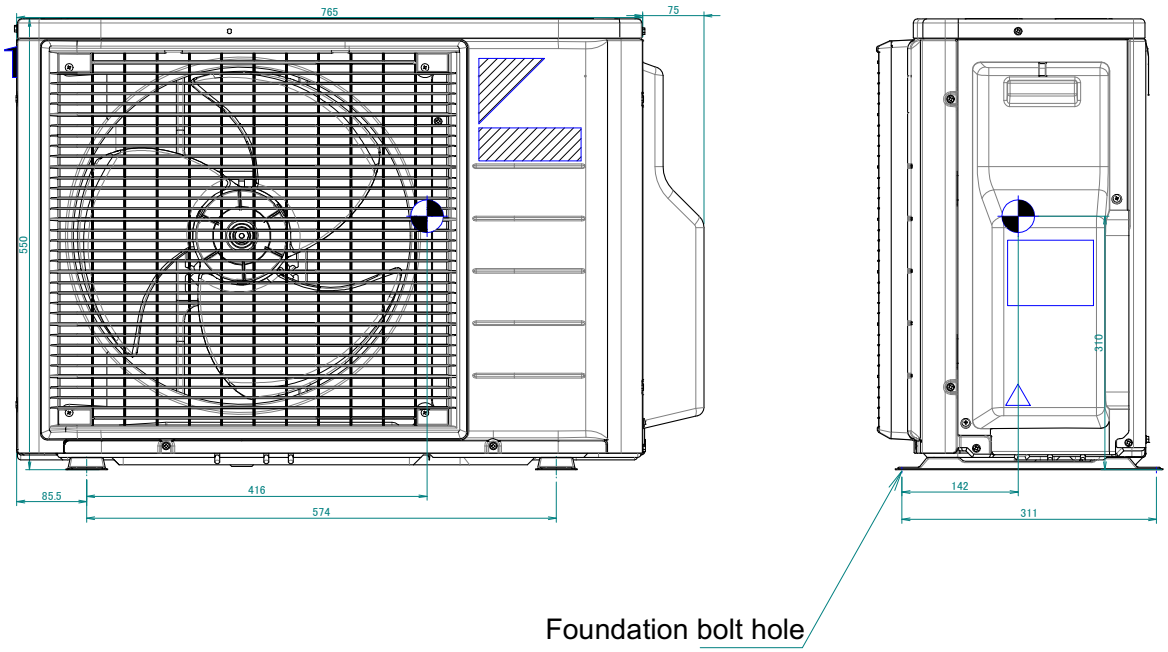


**4D101315A**

# 8 Piping diagrams

## 8 - 1 Piping Diagrams



**2MXF40A**

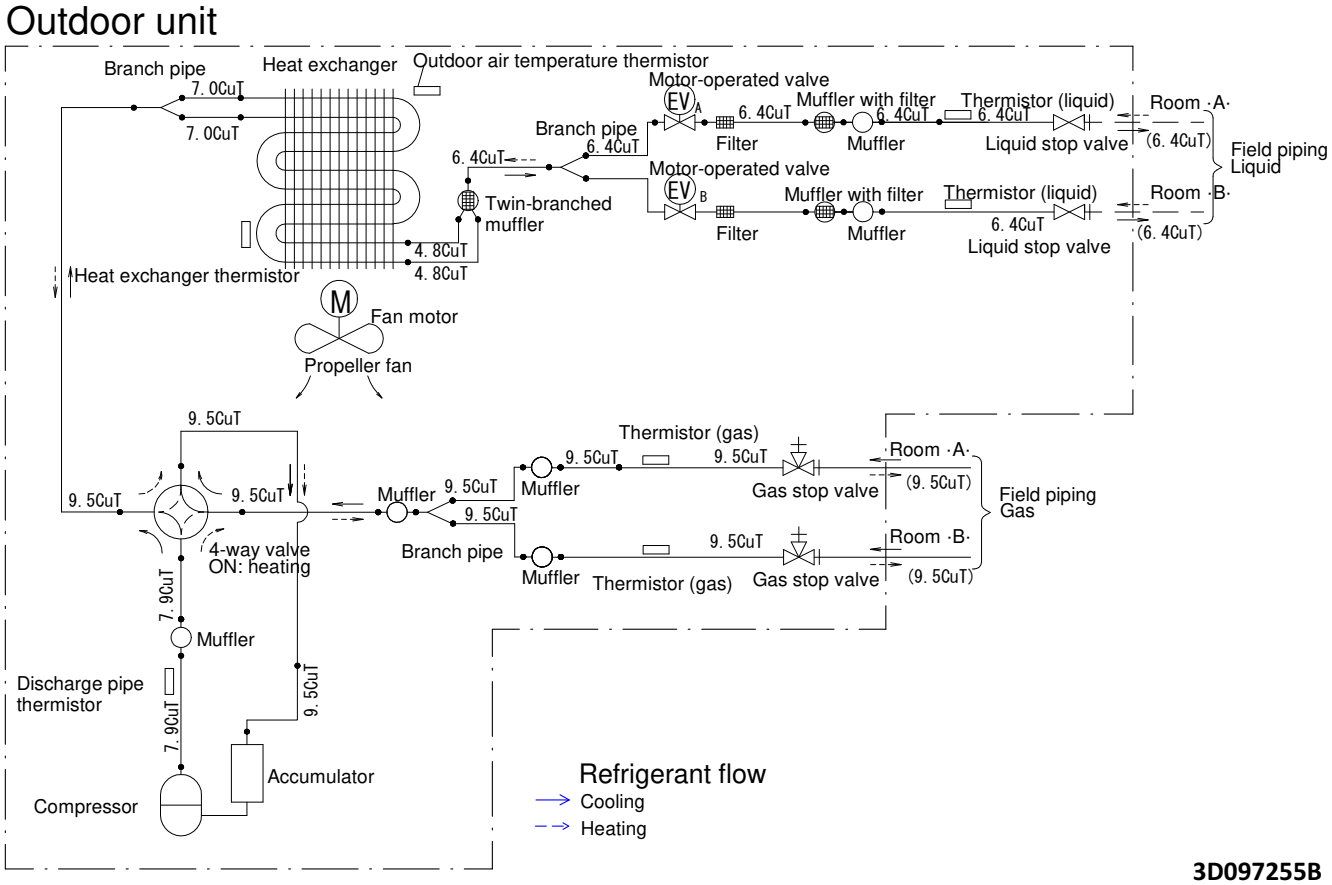


**2MXF50A**

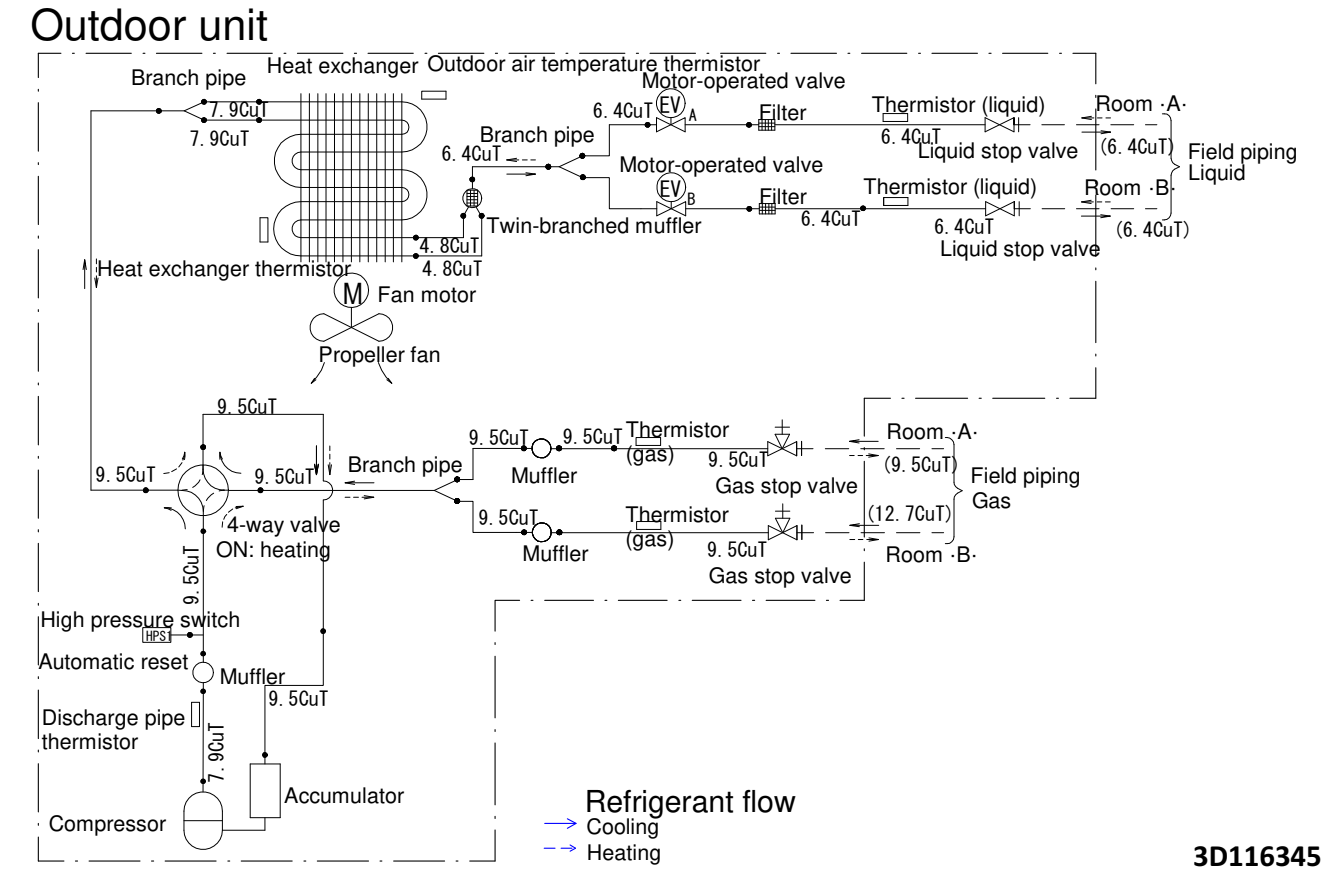

# 9 Wiring diagrams

## 9 - 1 Wiring Diagrams - Single Phase



**2MXF40A**

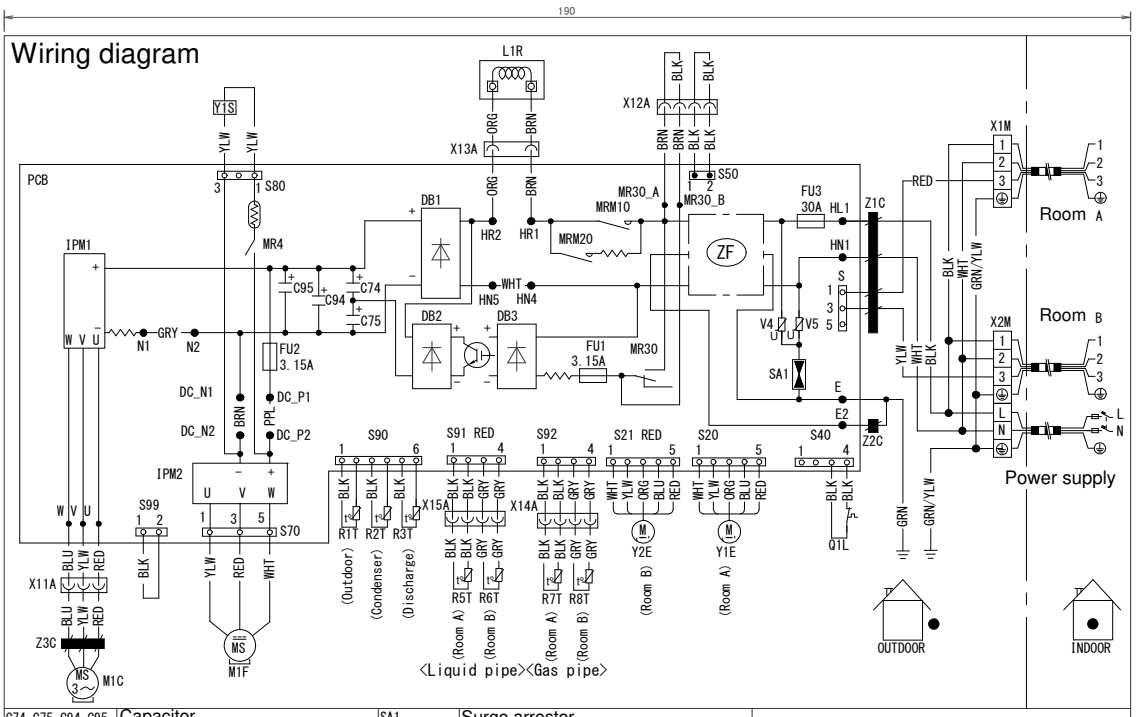


| | | | | | |
|---|---|---|---|---|---|
| C74, C75, C94, C95 | Capacitor | SA1 | Surge arrestor | | |
| DB1, DB2, DB3 | Diode bridge | | | | |
| FU1, FU2, FU3 | Fuse | V4, V5 | Varistor | | |
| IPM1 | Intelligent power module | X1M-X2M | Terminal strip with earth terminal | Field wiring | |
| L1R | Reactor | Y1E-Y2E | Electronic expansion valve coil | Screw terminal | |
| M1C | Compressor motor | Y1S | Reversing solenoid valve coil | Connector | |
| M1F | Fan motor | ZF | Noise filter | WHT: white | GRY: grey |
| MRM10, MRM20 | Magnetic relay | Z1C-Z3C | Ferrite core | BLK: black | ORG: orange |
| MR4, MR30 | Magnetic relay | S2-S502 | Connector | BLU: blue | RED: red |
| PCB | Printed circuit board | X11A-X15A | Connector | BRN: brown | YLW: yellow |
| Q1L | Overload protector | S99 | Heating-to-cooling changeover | GRN: green | |
| R1T-R8T | Thermistor | | | PPL: purple | |

**3D114689A**

**2MXF50A**

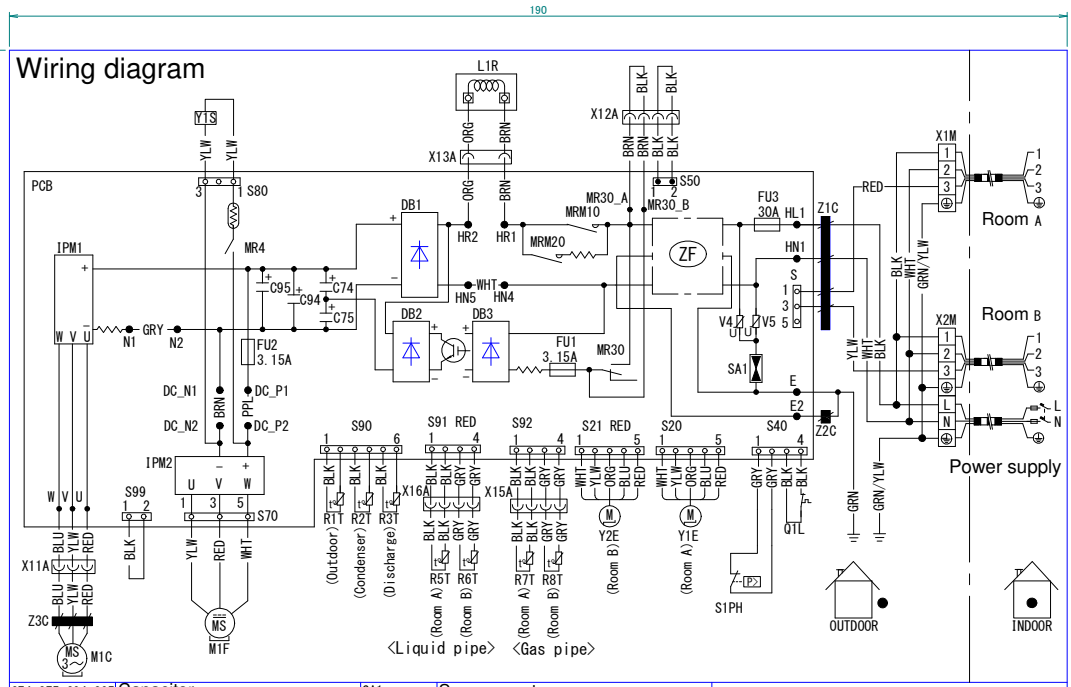


| | | | | | |
|---|---|---|---|---|---|
| C74, C75, C94, C95 | Capacitor | SA1 | Surge arrestor | | |
| DB1, DB2, DB3 | Diode bridge | S1PH | High pressure switch | | |
| FU1, FU2, FU3 | Fuse | V4, V5 | Varistor | | |
| IPM1 | Intelligent power module | X1M-X2M | Terminal strip with earth terminal | Field wiring | |
| L1R | Reactor | Y1E-Y2E | Electronic expansion valve coil | Screw terminal | |
| M1C | Compressor motor | Y1S | Reversing solenoid valve coil | Connector | |
| M1F | Fan motor | ZF | Noise filter | WHT: white | GRY: grey |
| MRM10, MRM20 | Magnetic relay | Z1C-Z3C | Ferrite core | BLK: black | ORG: orange |
| MR4, MR30 | Magnetic relay | S2-S502 | Connector | BLU: blue | RED: red |
| PCB | Printed circuit board | X11A-X16A | Connector | BRN: brown | YLW: yellow |
| Q1L | Overload protector | S99 | Heating-to-cooling changeover | GRN: green | |
| R1T-R8T | Thermistor | | | PPL: purple | |

**3D114690B**

# 10 Sound data

## 10 - 1 Sound Pressure Spectrum

10

**2MXF40A**

Cooling mode

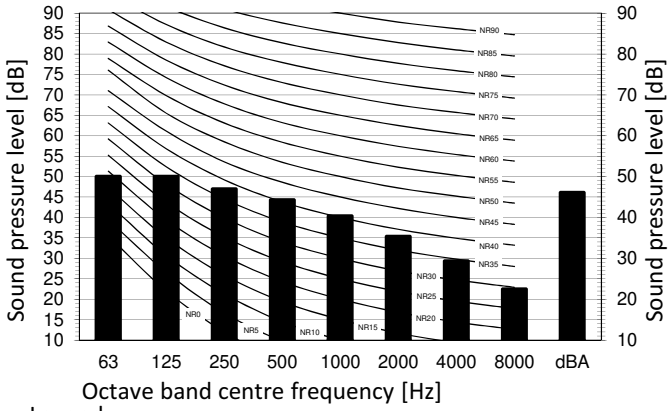


Heating mode

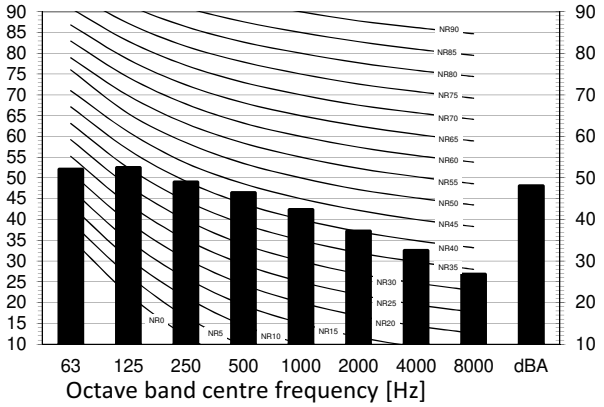


Legend

dBA = A-weighted sound pressure level (A scale according to IEC).

A Scale

B ■ Fan speed: High

Cooling Total dB

| A | B |
|---|---|
| dBA | 46 |

Heating Total dB

| A | B |
|---|---|
| dBA | 48 |

Location of microphone

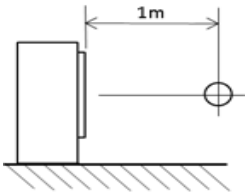


Notes

1 Background noise already taken into account.

2 Operating conditions: power source 220-240 V/220 V 50/60 Hz; JIS standard

3 Operating noise varies depending on operation and ambient conditions.

4 The operation noise measuring method is in accordance with JISC9612.

5 Measuring location: anechoic chamber

**3D102207C**

**2MXF50A**

Cooling mode

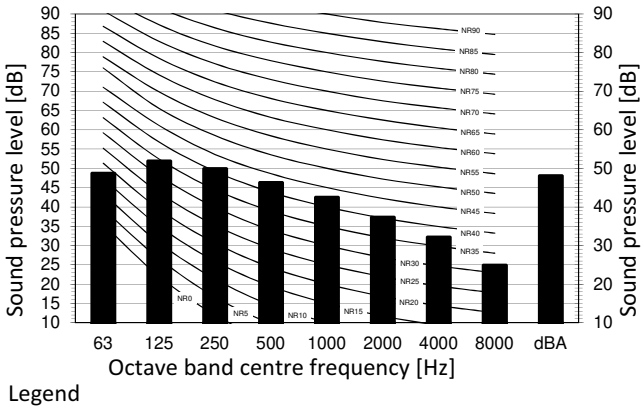


Heating mode

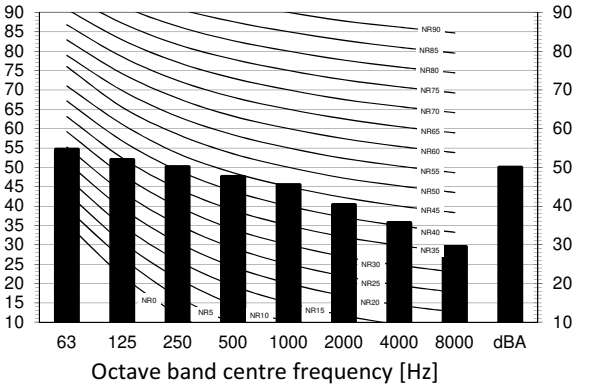


Legend

dBA = A-weighted sound pressure level (A scale according to IEC).

A Scale

B ■ Fan speed: High

Cooling Total dB

| A | B |
|---|---|
| dBA | 48 |

Heating Total dB

| A | B |
|---|---|
| dBA | 50 |

Location of microphone

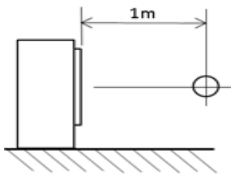


Notes

1 Background noise already taken into account.

2 Operating conditions: power source 220-240 V/220 V 50/60 Hz; JIS standard

3 Operating noise varies depending on operation and ambient conditions.

4 The operation noise measuring method is in accordance with JISC9612.

5 Measuring location: anechoic chamber

**3D102208C**

# 11 Operation range

## 11 - 1 Operation Range

**2MXF-A**

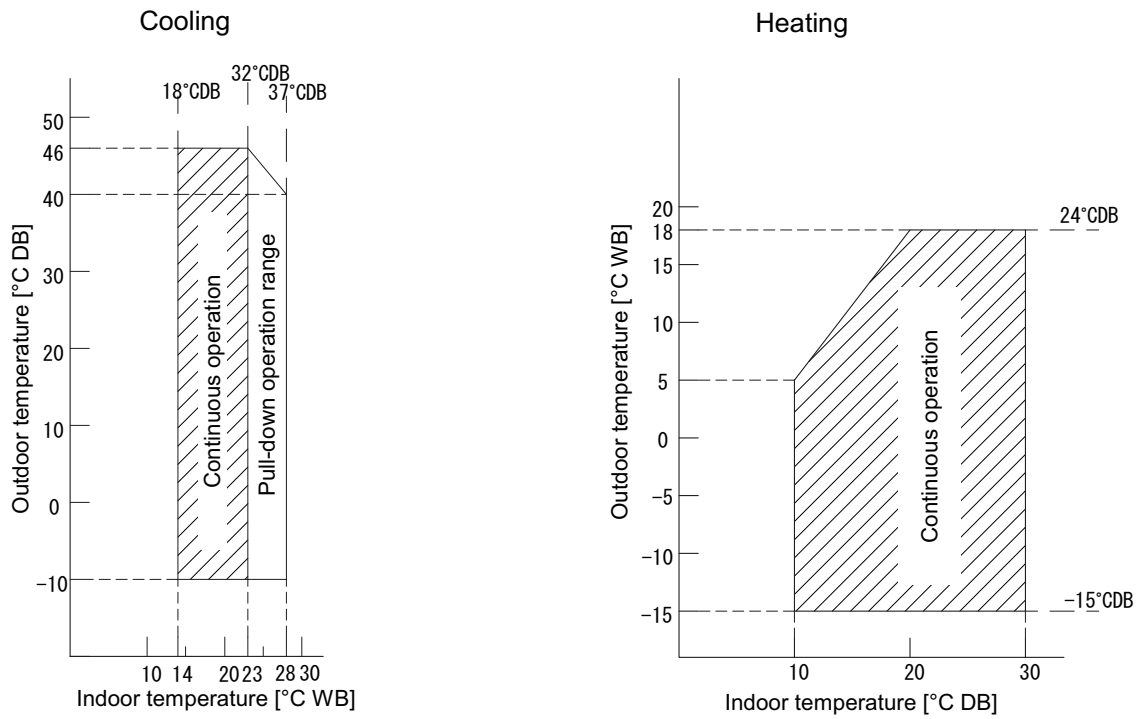


Notes
1. The ·graph· is based on the following conditions.
   Corresponding refrigerant piping length: ·5· m
   Level difference: ·0·m
   Air flow rate High

**3D101376D**

**Daikin Europe N.V. Naamloze Vennootschap - Zandvoordestraat 300, B-8400 Oostende - Belgium - www.daikin.eu - BE 0412 120 336 - RPR Oostende**

MIX
Paper from responsible sources
FSC® C109049

**EEDEN20A 02/20**

Daikin Europe N.V. participates in the Eurovent Certified Performance programme for Liquid Chilling Packages and Hydronic Heat Pumps, Fan Coil Units and Variable Refrigerant Flow systems. Check ongoing validity of certificate: www.eurovent-certification.com

The present leaflet is drawn up by way of information only and does not constitute an offer binding upon Daikin Europe N.V.. Daikin Europe N.V. has compiled the content of this leaflet to the best of its knowledge. No express or implied warranty is given for the completeness, accuracy, reliability or fitness for particular purpose of its content and the products and services presented therein. Specifications are subject to change without prior notice. Daikin Europe N.V. explicitly rejects any liability for any direct or indirect damage, in the broadest sense, arising from or related to the use and/or interpretation of this leaflet. All content is copyrighted by Daikin Europe N.V.