Split

Air Conditioning Technical Data

3MXF-A

> 3MXF52A2V1B
> 3MXF68A2V1B

TABLE OF CONTENTS

3MXF-A

1 Features . . . 2

2 Specifications . . . 3
Technical Specifications . . . 3
Electrical Specifications . . . 4

3 Electrical data . . . 5

4 Combination table . . . 6

5 Capacity tables . . . 7
Capacity Table Legend . . . 7
Cooling Capacity Tables . . . 8
Heating Capacity Tables . . . 10

6 Dimensional drawings . . . 12

7 Centre of gravity . . . 13

8 Piping diagrams . . . 14

9 Wiring diagrams . . . 15
Wiring Diagrams - Single Phase . . . 15

10 Sound data . . . 16
Sound Pressure Spectrum . . . 16

11 Operation range . . . 17

1 Features

- Seasonal efficiency values up to A+++ in cooling and A++ in heating thanks to its up-to-date technology and built-in intelligence
- Up to 3 indoor units can be connected to 1 multi outdoor unit; all indoor units are individually controllable and do not need to be installed in the same room or at the same time. They operate simultaneously within the same heating or cooling mode.
- Choosing for an R-32 product, reduces the environmental impact with 68% compared to R-410A and leads directly to lower energy consumption thanks to its high energy efficiency
- Different types of indoor units can be connected: e.g. wall mounted, ceiling mounted cassette corner, concealed ceiling unit
- Outdoor units are fitted with a swing compressor, renowned for its low noise and high energy efficiency

Inverter

2 Specifications

2-1 Technical Specifications					3MXF52A	3MXF68A
Capacity control	Method				Variable (inverter)	
Casing	Colour				Ivory white	
Dimensions	Unit	Height		mm	734	
		Width		mm	958	
		Depth		mm	340	
	Packed unit	Height		mm	820	
		Width		mm	1,050	
		Depth		mm	480	
Weight	Unit			kg	57.0	62.0
	Packed unit			kg	61.0	66.0
Heat exchanger	Length			mm	920	
	Rows	Quantity			2	
	Fin pitch			mm	1.40	
	Stages	Quantity			32	
	Passes	Quantity			6.4	
	Tube type				Hi-XA	
	Tube diameter			mm	8	
	Fin	Type			WHS8 FIN-HYDROPHILIC	
		Treatment			Anti-corrosion treatment	
Compressor	Quantity				1	
	Model				2YC40JXD#C	2YC71DXD#C
	Oil Amount			cm³	650	900
	Type				Hermetically sealed swing compressor	
	Output			W	1,300	2,400
	Oil Type				FW68DA	
Fan	Type				Propeller	
	Air flow rate	Cooling	High	m³/min	42.0	46.5
				cfm	1,483	1,642
			Nom.	m³/min	42.0	42.5
				cfm	1,483	1,501
		Heating	High	m³/min	41.0	43.8
				cfm	1,447	1,547
			Nom.	m³/min	41.0	43.8
				cfm	1,447	1,547
Fan motor	Quantity				1	
	Model				D55F-31	
	Output			W	55	
	Speed	Cooling	High	rpm	700	760
			Super low	rpm	420	
		Heating	High	rpm	680	720
			Super low	rpm	420	300
Sound power level	Cooling			dBA	59.0	61.0
	Heating			dBA	59.0	61.0
Sound pressure level	Cooling	Nom.		dBA	46.0	48.0
	Heating	Nom.		dBA	47.0	48.0
Operation range	Cooling	Ambient	Min.	°CDB	-10	
			Max.	°CDB	46	
	Heating	Ambient	Max.	°CDB	24	
Refrigerant	Type				R-32	
	Charge			kg	1.80	2.00
				TCO_2eq	1.22	1.35
	GWP				675.0	

2 Specifications

2-1 Technical Specifications					3MXF52A	3MXF68A
Piping connections	Liquid	OD		mm	6,35	
	Gas	Quantity			1	
		OD		mm	9.50	
	Drain	Quantity			1	
		OD		mm	16	
	Gas 2	Quantity			2	
		OD		mm	12.70	
	Piping length	OU - IU	Min.	m	3 (1)	
			Max.	m	25 (1)	
		System	Chargeless	m	30	
	Additional refrigerant charge			kg/m	0.02 (for piping length exceeding 30m)	
	Level difference	IU - OU	Max.	m	15.0	
		IU - IU	Max.	m	7.5	
	Total piping length	System	Actual	m	50	

Standard Accessories : Installation manual; Quantity : 1;

Standard Accessories : Screw bag; Quantity : 1;

Standard Accessories : Drain plug; Quantity : 1;

Standard Accessories : Reducer assembly; Quantity : 1;

Standard Accessories : Drain cap (1); Quantity : 6;

Standard Accessories : Drain cap (2); Quantity : 3;

2-2 Electrical Specifications			3MXF52A	3MXF68A
Power supply	Phase		1~	
	Frequency	Hz	50	
	Voltage	V	220-240	
Wiring connections	For power supply	Quantity	3	
		Remark	Earth wire included	
	For connection with indoor	Quantity	4	
		Remark	Earth wire included	

Notes

(1) For one room

See separate drawing for operation range

See separate drawing for electrical data

Contains fluorinated greenhouse gases

3 Electrical data

3 - 1 Electrical Data

3MXF-A

Outdoor unit	Power supply			·RA· indoor units (·10·% safety factor) See note ·5·.		Other indoor units (·10·% safety factor)		COMP		OFM	
Model name	Hz	Voltage	Voltage range	MCA	MFA	MCA	MFA	RHz	RLA	kW	FLA
3MXM40N2V1B	50	220	MAX. 50Hz 264V MIN. 50Hz 198V	17,88	20	19,95	20	-	2,9	0,056	0,37
	50	230							3,0		
	50	240							3,1		
3MXM52N2V1B	50	220	MAX. 50Hz 264V MIN. 50Hz 198V	18,19	20	20,28	25	-	4,5	0,056	0,37
	50	230							4,7		
	50	240							4,9		
3MXM68N2V1B	50	220	MAX. 50Hz 264V MIN. 50Hz 198V	20,80	25	23,97	25	-	8,0	0,056	0,37
	50	230							8,4		
	50	240							8,7		
4MXM68N2V1B	50	220	MAX. 50Hz 264V MIN. 50Hz 198V	21,00	25	23,97	25	-	7,0	0,056	0,37
	50	230							7,3		
	50	240							7,6		
4MXM80N2V1B	50	220	MAX. 50Hz 264V MIN. 50Hz 198V	21,46	25	25,64	32	-	8,5	0,075	0,50
	50	230							8,9		
	50	240							9,3		
5MXM90N2V1B	50	220	MAX. 50Hz 264V MIN. 50Hz 198V	21,70	25	25,88	32	-	9,2	0,075	0,50
	50	230							9,6		
	50	240							10,0		
3AMXM52M3V1B	50	220	MAX. 50Hz 264V MIN. 50Hz 198V	18,19	20	20,28	25	-	4,5	0,056	0,37
	50	230							4,7		
	50	240							4,9		
3MXF52A2V1B	50	220	MAX. 50Hz 264V MIN. 50Hz 198V	18,19	20	20,28	25	-	4,5	0,056	0,37
	50	230							4,7		
	50	240							4,9		
3AMXF52A2V1B	50	220	MAX. 50Hz 264V MIN. 50Hz 198V	18,19	20	20,28	25	-	4,5	0,056	0,37
	50	230							4,7		
	50	240							4,9		
3MXF68A2V1B	50	220	MAX. 50Hz 264V MIN. 50Hz 198V	20,80	25	23,97	25	-	8,0	0,056	0,37
	50	230							8,4		
	50	240							8,7		

Notes
1) The ·RLA· is based on the following conditions.
Outdoor temperature ·35·°C DB
Indoor temperature ·27·°C DB / ·19·°C WB
2) Select the wire size according to the MCA.
3) The maximum allowable voltage that is unbalanced between phases is ·2·%.
4) Use a circuit breaker instead of a fuse.
5) Only for wall-mounted ·FVXM· units

Symbols
MCA: Minimum Circuit Ampere [A]
MFA: Maximum Fuse Ampere [A]
RLA: Rated load amps [A]
OFM: Outdoor fan motor
RHz: Rated operating frequency [Hz]
FLA: Full Load Ampere [A]
kW: Fan motor rated output [kW]

3D110208B

4 Combination table

4 - 1 Combination Table

3MXF52A

Cooling ·(50Hz 230V)·

Outdoor unit	Indoor unit	Cooling capacity [kW]			Total capacity [kW]			Power input [kW]			Total current [A]			Power factor [%]
		Room A	Room B	Room ·C·	Minimum	Nominal	Maximum	Minimum	Nominal	Maximum	Minimum	Nominal	Maximum	
3MXF52A2V1B	2,0	2,00	---	---	1,60	2,00	3,00	0,36	0,57	0,88	1,60	2,57	3,96	96
	2,5	2,50	---	---	1,60	2,50	3,20	0,36	0,76	0,98	1,62	3,43	4,41	96
	3,5	3,50	---	---	1,60	3,50	4,20	0,37	1,16	1,48	1,63	5,27	6,69	96
	2.0+2.0	2,00	2,00	---	1,70	4,00	6,00	0,35	1,01	2,64	1,55	4,58	11,95	96
	2.0+2.5	2,00	2,50	---	1,70	4,50	6,20	0,35	1,13	2,53	1,55	5,12	11,43	96
	2.0+3.5	1,89	3,31	---	1,70	5,20	6,30	0,35	1,31	2,64	1,55	5,92	11,95	96
	2.5+2.5	2,50	2,50	---	1,70	5,00	6,30	0,35	1,24	2,68	1,55	5,60	12,13	96
	2.5+3.5	2,17	3,03	---	1,70	5,20	6,30	0,35	1,29	2,61	1,55	5,87	11,77	96
	3.5+3.5	2,60	2,60	---	1,70	5,20	6,40	0,35	1,28	2,61	1,55	5,81	11,81	96
	2.0+2.0+2.0	1,73	1,73	1,73	1,80	5,20	7,00	0,37	1,27	2,54	1,65	5,76	11,48	96
	2.0+2.0+2.5	1,60	1,60	2,00	1,80	5,20	7,00	0,37	1,26	2,53	1,65	5,71	11,43	96
	2.0+2.0+3.5	1,39	1,39	2,43	1,90	5,20	7,20	0,39	1,25	2,49	1,75	5,65	11,24	96
	2.0+2.5+2.5	1,49	1,86	1,86	1,80	5,20	7,10	0,39	1,25	2,43	1,75	5,65	11,00	96
	2.0+2.5+3.5	1,30	1,63	2,28	1,90	5,20	7,20	0,39	1,24	2,46	1,75	5,60	11,10	96
	2.0+3.5+3.5	1,16	2,02	2,02	1,90	5,20	7,30	0,39	1,24	2,46	1,75	5,60	11,10	96
	2.5+2.5+2.5	1,73	1,73	1,73	1,90	5,20	7,10	0,39	1,24	2,51	1,75	5,60	11,34	96
	2.5+2.5+3.5	1,53	1,53	2,14	1,90	5,20	7,20	0,39	1,24	2,47	1,75	5,60	11,15	96

Heating ·(50Hz 230V)·

Outdoor unit	Indoor unit	Heating capacity [kW]			Total capacity [kW]			Power input [kW]			Total current [A]			Power factor [%]
		Room A	Room B	Room ·C·	Minimum	Nominal	Maximum	Minimum	Nominal	Maximum	Minimum	Nominal	Maximum	
3MXF52A2V1B	2,0	2,70	---	---	1,10	2,70	3,80	0,30	0,95	1,37	1,34	4,25	6,20	96
	2,5	3,40	---	---	1,10	3,40	4,20	0,30	1,26	1,46	1,34	5,67	6,61	96
	3,5	4,20	---	---	1,10	4,20	4,80	0,30	1,77	1,88	1,34	7,99	8,51	96
	2.0+2.0	3,40	3,40	---	1,20	6,80	7,00	0,32	1,99	2,45	1,44	9,00	11,10	96
	2.0+2.5	3,02	3,78	---	1,20	6,80	7,00	0,32	1,97	2,44	1,44	8,95	11,05	96
	2.0+3.5	2,47	4,33	---	1,20	6,80	7,10	0,32	1,96	2,45	1,44	8,89	11,10	96
	2.5+2.5	3,40	3,40	---	1,20	6,80	7,00	0,32	1,91	2,41	1,44	8,66	10,91	96
	2.5+3.5	2,83	3,97	---	1,30	6,80	7,20	0,32	1,91	2,55	1,44	8,66	11,55	96
	3.5+3.5	3,40	3,40	---	1,40	6,80	7,30	0,32	1,90	2,58	1,44	8,61	11,68	96
	2.0+2.0+2.0	2,27	2,27	2,27	1,30	6,80	8,00	0,32	1,73	2,31	1,44	7,84	10,46	96
	2.0+2.0+2.5	2,09	2,09	2,62	1,30	6,80	8,00	0,32	1,72	2,28	1,44	7,81	10,33	96
	2.0+2.0+3.5	1,81	1,81	3,17	1,40	6,80	8,10	0,32	1,71	2,29	1,44	7,76	10,37	96
	2.0+2.5+2.5	1,94	2,43	2,43	1,30	6,80	8,00	0,32	1,71	2,26	1,44	7,76	10,24	96
	2.0+2.5+3.5	1,70	2,13	2,98	1,50	6,80	8,10	0,32	1,70	2,28	1,44	7,70	10,33	96
	2.0+3.5+3.5	1,51	2,64	2,64	1,50	6,80	8,20	0,32	1,69	2,33	1,44	7,64	10,55	96
	2.5+2.5+2.5	2,27	2,27	2,27	1,40	6,80	8,00	0,32	1,70	2,24	1,44	7,70	10,14	96
	2.5+2.5+3.5	2,00	2,00	2,80	1,50	6,80	8,10	0,32	1,69	2,26	1,44	7,64	10,24	96

Notes
1. The total capacity of each connected indoor unit is up to ·8.5·kW.
2. The values above are for connecting with the following indoor unit types:
   ·2.0, 2.5, 3.5· kW class
   Wall-mounted ·FTXF-A, FTXF-B· series
3. These indoor units can only be used in a multi-unit setup.
4. Cooling capacity conditions
   Indoor temperature ·27·°C DB / ·19·°C WB
   Outdoor temperature ·35·°C DB
5. Heating capacity conditions
   Indoor temperature ·20·°C DB
   Outdoor temperature ·7·°C DB / ·6·°C WB

3D126696A

3MXF68A

Cooling ·(50Hz 230V)·

Outdoor unit	Indoor unit	Cooling capacity [kW]			Total capacity [kW]			Power input [kW]			Total current [A]			Power factor [%]
		Room A	Room B	Room ·C·	Minimum	Nominal	Maximum	Minimum	Nominal	Maximum	Minimum	Nominal	Maximum	
3MXF68A2V1B	2,0	2,00	---	---	1,66	2,00	2,68	0,42	0,48	0,66	1,91	2,30	3,02	95
	2,5	2,50	---	---	1,74	2,50	3,44	0,44	0,49	0,90	2,00	2,90	4,12	95
	3,5	3,50	---	---	1,93	3,50	4,86	0,46	0,51	1,57	2,09	4,26	7,19	95
	2.0+2.0	2,00	2,00	---	1,95	4,00	5,12	0,40	0,83	1,42	1,81	3,80	6,50	95
	2.0+2.5	2,00	2,50	---	1,95	4,50	5,44	0,40	0,98	1,57	1,81	4,51	7,19	95
	2.0+3.5	2,00	3,50	---	1,95	5,50	6,30	0,39	1,29	2,10	1,77	5,93	9,61	95
	2.5+2.5	2,50	2,50	---	1,95	5,00	6,10	0,41	1,12	1,96	1,89	5,12	8,97	95
	2.5+3.5	2,50	3,50	---	1,95	6,00	6,57	0,40	1,43	2,32	1,81	6,54	10,62	95
	3.5+3.5	3,40	3,40	---	1,95	6,80	7,13	0,38	1,60	2,61	1,73	7,35	11,95	95
	2.0+2.0+2.0	2,00	2,00	2,00	1,96	6,00	6,64	0,39	1,48	1,85	1,77	6,79	8,47	95
	2.0+2.0+2.5	2,00	2,00	2,50	1,96	6,50	7,03	0,39	1,80	2,08	1,77	8,26	9,52	95
	2.0+2.0+3.5	1,81	1,81	3,17	1,96	6,80	7,40	0,38	1,98	2,30	1,73	9,07	10,53	95
	2.0+2.5+2.5	1,94	2,43	2,43	1,96	6,80	7,24	0,38	1,95	2,21	1,73	8,93	10,11	95
	2.0+2.5+3.5	1,70	2,13	2,98	1,96	6,80	7,74	0,36	1,95	2,54	1,64	8,92	11,62	95
	2.0+3.5+3.5	1,51	2,64	2,64	1,96	6,80	8,07	0,37	1,93	2,79	1,68	8,82	12,77	95
	2.5+2.5+2.5	2,27	2,27	2,27	1,96	6,80	7,53	0,38	1,95	2,40	1,73	8,92	10,98	95
	2.5+2.5+3.5	2,00	2,00	2,80	1,96	6,80	7,94	0,36	1,90	2,70	1,64	8,71	12,36	95
	2.5+3.5+3.5	1,79	2,51	2,51	2,27	6,80	8,30	0,40	1,88	2,99	1,85	8,61	13,68	95
	3.5+3.5+3.5	2,27	2,27	2,27	2,38	6,80	8,59	0,40	1,86	3,26	1,81	8,51	14,92	95

Heating ·(50Hz 230V)·

Outdoor unit	Indoor unit	Heating capacity [kW]			Total capacity [kW]			Power input [kW]			Total current [A]			Power factor [%]
		Room A	Room B	Room ·C·	Minimum	Nominal	Maximum	Minimum	Nominal	Maximum	Minimum	Nominal	Maximum	
3MXF68A2V1B	2,0	2,72	---	---	1,48	2,72	4,09	0,43	0,82	1,41	1,95	4,00	6,45	95
	2,5	3,40	---	---	1,44	3,40	4,30	0,42	1,13	1,51	1,91	5,57	6,91	95
	3,5	4,30	---	---	1,45	4,30	4,90	0,40	1,56	1,93	1,82	7,68	8,83	95
	2.0+2.0	3,25	3,25	---	1,65	6,50	7,95	0,36	1,52	2,54	1,63	6,98	11,62	95
	2.0+2.5	3,07	3,83	---	1,65	6,90	8,12	0,36	1,69	2,55	1,63	7,74	11,67	95
	2.0+3.5	2,73	4,77	---	1,80	7,50	8,67	0,37	1,95	2,67	1,68	8,92	12,22	95
	2.5+2.5	3,60	3,60	---	1,65	7,20	8,49	0,36	1,80	2,60	1,63	8,25	11,90	95
	2.5+3.5	3,29	4,61	---	1,89	7,90	9,03	0,38	2,13	2,93	1,72	9,73	13,41	95
	3.5+3.5	4,30	4,30	---	2,17	8,60	9,38	0,42	2,51	3,15	1,94	11,51	14,42	95
	2.0+2.0+2.0	2,60	2,60	2,60	2,01	7,80	10,44	0,41	1,91	2,73	1,89	8,76	12,49	95
	2.0+2.0+2.5	2,52	2,52	3,15	2,10	8,20	10,52	0,42	2,04	2,77	1,94	9,32	12,68	95
	2.0+2.0+3.5	2,29	2,29	4,01	2,31	8,60	10,68	0,44	2,27	2,93	2,02	10,39	13,41	95
	2.0+2.5+2.5	2,46	3,07	3,07	2,20	8,60	10,59	0,43	2,25	2,89	1,98	10,30	13,23	95
	2.0+2.5+3.5	2,15	2,69	3,76	2,40	8,60	10,68	0,46	2,25	2,93	2,11	10,29	13,41	95
	2.0+3.5+3.5	1,91	3,34	3,34	2,69	8,60	10,77	0,52	2,23	3,16	2,37	10,19	14,46	95
	2.5+2.5+2.5	2,87	2,87	2,87	2,31	8,60	10,65	0,45	2,21	2,90	2,06	10,14	13,27	95
	2.5+2.5+3.5	2,53	2,53	3,54	2,50	8,60	10,87	0,48	2,21	2,99	2,19	10,14	13,68	95
	2.5+3.5+3.5	2,26	3,17	3,17	2,78	8,60	11,00	0,53	2,18	2,99	2,41	9,98	13,68	95
	3.5+3.5+3.5	2,87	2,87	2,87	2,98	8,60	11,06	0,57	2,16	3,07	2,62	9,88	14,05	95

Notes
1. The total capacity of each connected indoor unit is up to ·10.5·kW.
2. The values above are for connecting with the following indoor unit types:
   ·2.0, 2.5, 3.5· kW class
   Wall-mounted ·FTXF-A, FTXF-B· series
3. These indoor units can only be used in a multi-unit setup.
4. Cooling capacity conditions
   Indoor temperature ·27·°C DB / ·19·°C WB
   Outdoor temperature ·35·°C DB
5. Heating capacity conditions
   Indoor temperature ·20·°C DB
   Outdoor temperature ·7·°C DB / ·6·°C WB

3D126698A

5 Capacity tables

5 - 1 Capacity Table Legend

In order to fulfill more your requirements on quick access of data in the format you require, we have developed a tool to consult capacity tables.

Below you can find the link to the capacity table database and an overview of all the tools we have to help you select the correct product:

- **Capacity table database:** lets you find back and export quickly the capacity information you are looking for based upon unit model, refrigerant temperature and connection ratio.
- You can access the capacity table viewer here:
  https://my.daikin.eu/content/denv/en_US/home/applications/software-finder/capacity-table-viewer.html

- An overview of **all software tools** that we offer can be found here:
  https://my.daikin.eu/denv/en_US/home/applications/software-finder.html

5 Capacity tables

5 - 2 Cooling Capacity Tables

3MXF52A

Cooling ·(50Hz 230V)·

①	②	Indoor air temperature [°C WB]											
		14°C		16°C		18°C		19°C		22°C		24°C	
		TC	PI	TC	PI	TC	PI	TC	PI	TC	PI	TC	PI
		kW	kW	kW	kW	kW	kW	kW	kW	kW	kW	kW	kW
2,0	22,0	2,79	0,68	3,15	0,76	3,28	0,77	3,34	0,78	3,54	0,80	3,67	0,81
	25,0	2,79	0,72	3,07	0,78	3,20	0,79	3,26	0,80	3,46	0,82	3,59	0,83
	32,0	2,75	0,83	2,88	0,84	3,01	0,85	3,08	0,86	3,28	0,87	3,41	0,88
	35,0	2,67	0,85	2,80	0,86	2,93	0,87	3,00	0,88	3,20	0,90	3,33	0,91
	40,0	2,54	0,90	2,67	0,91	2,80	0,92	2,87	0,93	3,06	0,94	3,19	0,96
	43,0	2,46	0,93	2,59	0,94	2,72	0,95	2,79	0,96	2,98	0,97	3,12	0,98
	46,0	2,38	0,96	2,51	0,97	2,64	0,98	2,71	0,99	2,91	1,00	3,04	1,01
2,5	22,0	2,99	0,79	3,35	0,87	3,48	0,88	3,54	0,89	3,74	0,91	3,87	0,92
	25,0	2,99	0,83	3,27	0,89	3,40	0,90	3,46	0,91	3,66	0,93	3,79	0,94
	32,0	2,95	0,94	3,08	0,95	3,21	0,96	3,28	0,97	3,48	0,97	3,61	0,98
	35,0	2,87	0,95	3,00	0,96	3,13	0,97	3,20	0,98	3,40	1,00	3,53	1,01
	40,0	2,74	1,00	2,87	1,01	3,00	1,02	3,07	1,03	3,26	1,04	3,39	1,07
	43,0	2,66	1,03	2,79	1,04	2,92	1,05	2,99	1,07	3,18	1,07	3,32	1,08
	46,0	2,58	1,07	2,71	1,07	2,84	1,08	2,91	1,09	3,11	1,10	3,24	1,11
3,5	22,0	3,02	0,79	3,70	0,98	4,44	1,22	4,71	1,30	4,99	1,33	5,19	1,35
	25,0	3,02	0,84	3,70	1,05	4,44	1,31	4,59	1,34	4,88	1,37	5,07	1,39
	32,0	3,02	0,98	3,70	1,24	4,22	1,43	4,32	1,44	4,61	1,47	4,80	1,49
	35,0	3,02	1,05	3,70	1,34	4,10	1,47	4,20	1,48	4,49	1,51	4,68	1,53
	40,0	3,02	1,19	3,70	1,52	3,91	1,55	4,01	1,56	4,29	1,59	4,49	1,61
	43,0	3,02	1,30	3,70	1,58	3,79	1,60	3,89	1,61	4,18	1,64	4,37	1,66
	46,0	3,02	1,41	3,48	1,63	3,68	1,65	3,77	1,66	4,06	1,69	4,25	1,71
2.0+2.0	22,0	5,30	1,89	6,31	2,27	6,58	2,30	6,72	2,32	7,13	2,36	7,41	2,39
	25,0	5,30	2,00	6,14	2,33	6,42	2,36	6,56	2,37	6,97	2,42	7,24	2,45
	32,0	5,30	2,32	5,75	2,47	6,03	2,50	6,17	2,52	6,58	2,56	6,85	2,59
	35,0	5,30	2,50	5,59	2,54	5,86	2,57	6,00	2,64	6,41	2,63	6,69	2,66
	40,0	5,04	2,62	5,31	2,65	5,59	2,68	5,72	2,70	6,13	2,75	6,41	2,78
	43,0	4,87	2,70	5,14	2,73	5,42	2,76	5,56	2,77	5,97	2,82	6,24	2,85
	46,0	4,67	2,73	4,90	2,73	5,14	2,72	5,25	2,72	5,59	2,71	5,80	2,71
2.0+2.5	22,0	5,50	1,84	6,51	2,23	6,78	2,26	6,92	2,28	7,33	2,31	7,61	2,34
	25,0	5,50	1,95	6,34	2,29	6,62	2,32	6,76	2,32	7,17	2,38	7,44	2,40
	32,0	5,50	2,28	5,95	2,42	6,23	2,45	6,37	2,47	6,78	2,51	7,05	2,54
	35,0	5,50	2,45	5,79	2,49	6,06	2,52	6,20	2,53	6,61	2,58	6,89	2,61
	40,0	5,24	2,57	5,51	2,60	5,79	2,63	5,92	2,65	6,33	2,70	6,61	2,73
	43,0	5,07	2,65	5,34	2,68	5,62	2,71	5,76	2,72	6,17	2,77	6,44	2,80
	46,0	4,87	2,69	5,10	2,68	5,34	2,68	5,45	2,68	5,79	2,67	6,00	2,67

①	②	Indoor air temperature [°C WB]											
		14°C		16°C		18°C		19°C		22°C		24°C	
		TC	PI	TC	PI	TC	PI	TC	PI	TC	PI	TC	PI
		kW	kW	kW	kW	kW	kW	kW	kW	kW	kW	kW	kW
2.0+3.5	22,0	5,69	1,94	6,62	2,30	6,91	2,34	7,06	2,35	7,49	2,40	7,77	2,44
	25,0	5,69	2,07	6,45	2,37	6,74	2,40	6,88	2,42	7,31	2,46	7,60	2,50
	32,0	5,69	2,44	6,04	2,52	6,33	2,55	6,47	2,57	6,91	2,62	7,19	2,65
	35,0	5,58	2,56	5,87	2,59	6,16	2,63	6,30	2,64	6,73	2,69	7,02	2,71
	40,0	5,29	2,69	5,58	2,72	5,87	2,75	6,01	2,77	6,44	2,82	6,73	2,85
	43,0	5,12	2,77	5,40	2,80	5,69	2,83	5,84	2,85	6,27	2,90	6,55	2,93
	46,0	4,75	2,61	4,98	2,60	5,21	2,60	5,33	2,60	5,66	2,59	5,87	2,59
2.5+2.5	22,0	5,60	2,00	6,61	2,38	6,88	2,41	7,02	2,43	7,43	2,47	7,71	2,50
	25,0	5,60	2,10	6,44	2,44	6,72	2,47	6,86	2,48	7,27	2,53	7,54	2,56
	32,0	5,60	2,43	6,05	2,57	6,33	2,60	6,47	2,62	6,88	2,66	7,15	2,69
	35,0	5,60	2,60	5,89	2,64	6,16	2,67	6,30	2,68	6,71	2,73	6,99	2,76
	40,0	5,34	2,72	5,61	2,75	5,89	2,78	6,02	2,80	6,43	2,85	6,71	2,88
	43,0	5,17	2,80	5,44	2,83	5,72	2,86	5,86	2,87	6,27	2,92	6,54	2,95
	46,0	4,97	2,84	5,20	2,83	5,44	2,82	5,55	2,82	5,89	2,82	6,10	2,81
2.5+3.5	22,0	5,69	1,91	6,62	2,27	6,91	2,32	7,06	2,32	7,49	2,37	7,77	2,41
	25,0	5,69	2,04	6,45	2,34	6,74	2,37	6,88	2,39	7,31	2,43	7,60	2,47
	32,0	5,69	2,42	6,04	2,49	6,33	2,52	6,47	2,54	6,91	2,59	7,19	2,62
	35,0	5,58	2,53	5,87	2,56	6,16	2,60	6,30	2,61	6,73	2,66	7,02	2,69
	40,0	5,29	2,66	5,58	2,69	5,87	2,72	6,01	2,74	6,44	2,79	6,73	2,82
	43,0	5,12	2,74	5,40	2,77	5,69	2,80	5,84	2,82	6,27	2,87	6,55	2,90
	46,0	4,75	2,58	4,98	2,58	5,21	2,57	5,33	2,57	5,66	2,57	5,87	2,56
3.5+3.5	22,0	6,00	1,96	6,73	2,25	7,03	2,28	7,17	2,30	7,62	2,35	7,91	2,39
	25,0	6,00	2,12	6,55	2,31	6,85	2,35	7,00	2,37	7,44	2,42	7,73	2,46
	32,0	5,84	2,44	6,14	2,48	6,43	2,52	6,58	2,53	7,02	2,59	7,32	2,62
	35,0	5,66	2,52	5,96	2,56	6,25	2,59	6,40	2,61	6,84	2,67	7,14	2,70
	40,0	5,36	2,66	5,66	2,71	5,95	2,73	6,10	2,75	6,54	2,80	6,84	2,85
	43,0	5,19	2,75	5,48	2,79	5,78	2,83	5,92	2,85	6,37	2,90	6,66	2,94
	46,0	4,69	2,38	4,91	2,37	5,13	2,37	5,24	2,37	5,56	2,36	5,77	2,36

Symbols
- TC: Total capacity [kW]
- PI: Power input [kW]
- ①: Indoor unit combinations
- ②: Outdoor temperature [°C DB]

Notes
1. The capacities are based on the following conditions:
   Corresponding refrigerant piping length: ·5· m
   Level difference: ·0·m
2. The bold cells indicate the standard conditions.
3. The values above are for connecting with the following indoor unit types:
   ·2.0, 2.5, 3.5· kW class
   Wall-mounted ·FTXF-A, FTXF-B· series

3D126708A

3MXF52A

Cooling ·(50Hz 230V)·

①	②	Indoor air temperature [°C WB]											
		14°C		16°C		18°C		19°C		22°C		24°C	
		TC	PI	TC	PI	TC	PI	TC	PI	TC	PI	TC	PI
		kW	kW	kW	kW	kW	kW	kW	kW	kW	kW	kW	kW
2.0+2.0+2.0	22,0	7,04	2,16	7,37	2,19	7,69	2,22	7,85	2,24	8,34	2,29	8,66	2,33
	25,0	6,84	2,22	7,17	2,25	7,49	2,29	7,66	2,31	8,14	2,36	8,47	2,39
	32,0	6,39	2,38	6,71	2,42	7,03	2,45	7,20	2,47	7,68	2,52	8,01	2,55
	35,0	6,19	2,46	6,51	2,49	6,84	2,53	7,00	2,54	7,49	2,59	7,81	2,63
	40,0	5,86	2,59	6,19	2,62	6,51	2,67	6,67	2,67	7,16	2,74	7,48	2,77
	43,0	5,66	2,67	5,99	2,72	6,31	2,75	6,48	2,77	6,96	2,82	7,29	2,86
	46,0	5,13	2,41	5,38	2,41	5,63	2,40	5,75	2,40	6,10	2,40	6,33	2,39
2.0+2.0+2.5	22,0	7,04	2,15	7,37	2,18	7,69	2,21	7,85	2,23	8,34	2,28	8,66	2,32
	25,0	6,84	2,21	7,17	2,24	7,49	2,28	7,66	2,30	8,14	2,35	8,47	2,38
	32,0	6,39	2,37	6,71	2,41	7,03	2,44	7,20	2,46	7,68	2,51	8,01	2,54
	35,0	6,19	2,45	6,51	2,48	6,84	2,52	7,00	2,53	7,49	2,58	7,81	2,62
	40,0	5,86	2,58	6,19	2,61	6,51	2,65	6,67	2,66	7,16	2,72	7,48	2,76
	43,0	5,66	2,66	5,99	2,71	6,31	2,73	6,48	2,76	6,96	2,81	7,29	2,85
	46,0	5,13	2,40	5,38	2,40	5,63	2,39	5,75	2,39	6,10	2,39	6,33	2,38
2.0+2.0+3.5	22,0	7,24	2,10	7,57	2,13	7,89	2,16	8,05	2,18	8,54	2,23	8,87	2,27
	25,0	7,04	2,16	7,37	2,19	7,69	2,23	7,86	2,25	8,35	2,31	8,67	2,33
	32,0	6,58	2,32	6,91	2,36	7,23	2,40	7,40	2,41	7,89	2,47	8,21	2,50
	35,0	6,39	2,41	6,71	2,44	7,04	2,48	7,20	2,49	7,69	2,54	8,01	2,58
	40,0	6,06	2,54	6,38	2,57	6,71	2,61	6,87	2,62	7,36	2,68	7,68	2,71
	43,0	5,86	2,62	6,19	2,66	6,51	2,69	6,67	2,72	7,16	2,76	7,49	2,80
	46,0	5,32	2,36	5,58	2,35	5,82	2,35	5,95	2,35	6,30	2,34	6,53	2,34
2.0+2.5+2.5	22,0	7,14	2,04	7,47	2,07	7,79	2,10	7,95	2,12	8,44	2,17	8,76	2,22
	25,0	6,94	2,10	7,27	2,13	7,59	2,17	7,76	2,19	8,24	2,25	8,57	2,28
	32,0	6,49	2,27	6,81	2,31	7,13	2,34	7,30	2,36	7,78	2,41	8,11	2,44
	35,0	6,29	2,35	6,61	2,38	6,94	2,42	7,10	2,43	7,59	2,48	7,91	2,52
	40,0	5,96	2,48	6,29	2,51	6,61	2,55	6,77	2,56	7,26	2,62	7,58	2,65
	43,0	5,76	2,56	6,09	2,60	6,41	2,63	6,58	2,65	7,06	2,70	7,39	2,74
	46,0	5,23	2,30	5,48	2,29	5,73	2,29	5,85	2,29	6,20	2,28	6,43	2,28
2.0+2.5+3.5	22,0	7,24	2,08	7,57	2,11	7,89	2,14	8,05	2,16	8,54	2,21	8,87	2,25
	25,0	7,04	2,14	7,37	2,17	7,69	2,21	7,86	2,23	8,35	2,28	8,67	2,31
	32,0	6,58	2,30	6,91	2,34	7,23	2,37	7,40	2,39	7,89	2,44	8,21	2,47
	35,0	6,39	2,38	6,71	2,41	7,04	2,45	7,20	2,46	7,69	2,51	8,01	2,55
	40,0	6,06	2,51	6,38	2,54	6,71	2,58	6,87	2,59	7,36	2,66	7,68	2,69
	43,0	5,86	2,59	6,19	2,64	6,51	2,67	6,67	2,70	7,16	2,74	7,49	2,78
	46,0	5,32	2,33	5,58	2,33	5,82	2,32	5,95	2,32	6,30	2,32	6,53	2,31

①	②	Indoor air temperature [°C WB]											
		14°C		16°C		18°C		19°C		22°C		24°C	
		TC	PI	TC	PI	TC	PI	TC	PI	TC	PI	TC	PI
		kW	kW	kW	kW	kW	kW	kW	kW	kW	kW	kW	kW
2.0+3.5+3.5	22,0	7,34	2,08	7,67	2,11	7,99	2,14	8,16	2,16	8,64	2,21	8,97	2,25
	25,0	7,14	2,14	7,47	2,17	7,80	2,21	7,96	2,23	8,45	2,28	8,77	2,31
	32,0	6,68	2,30	7,01	2,34	7,33	2,37	7,50	2,39	7,99	2,44	8,31	2,47
	35,0	6,49	2,38	6,81	2,41	7,14	2,45	7,30	2,46	7,79	2,51	8,11	2,55
	40,0	6,16	2,51	6,48	2,54	6,81	2,58	6,97	2,59	7,46	2,66	7,79	2,69
	43,0	5,96	2,59	6,28	2,64	6,61	2,67	6,77	2,69	7,26	2,74	7,59	2,78
	46,0	5,42	2,33	5,67	2,33	5,92	2,32	6,04	2,32	6,40	2,32	6,63	2,31
2.5+2.5+2.5	22,0	7,14	2,13	7,47	2,15	7,79	2,19	7,95	2,20	8,44	2,25	8,76	2,30
	25,0	6,94	2,19	7,27	2,21	7,59	2,26	7,76	2,28	8,24	2,33	8,57	2,36
	32,0	6,49	2,35	6,81	2,39	7,13	2,42	7,30	2,44	7,78	2,49	8,11	2,52
	35,0	6,29	2,43	6,61	2,46	6,94	2,50	7,10	2,51	7,59	2,56	7,91	2,60
	40,0	5,96	2,56	6,29	2,59	6,61	2,63	6,77	2,64	7,26	2,70	7,58	2,73
	43,0	5,76	2,64	6,09	2,68	6,41	2,71	6,58	2,73	7,06	2,78	7,39	2,82
	46,0	5,23	2,38	5,48	2,37	5,73	2,37	5,85	2,37	6,20	2,36	6,43	2,36
2.5+2.5+3.5	22,0	7,24	2,09	7,57	2,12	7,89	2,15	8,05	2,17	8,54	2,22	8,87	2,26
	25,0	7,04	2,15	7,37	2,18	7,69	2,22	7,86	2,24	8,35	2,29	8,67	2,32
	32,0	6,58	2,31	6,91	2,35	7,23	2,38	7,40	2,40	7,89	2,46	8,21	2,48
	35,0	6,39	2,39	6,71	2,42	7,04	2,46	7,20	2,47	7,69	2,52	8,01	2,57
	40,0	6,06	2,52	6,38	2,56	6,71	2,60	6,87	2,61	7,36	2,67	7,68	2,70
	43,0	5,86	2,61	6,19	2,65	6,51	2,68	6,67	2,71	7,16	2,75	7,49	2,79
	46,0	5,32	2,34	5,58	2,34	5,82	2,34	5,95	2,33	6,30	2,33	6,53	2,33

Symbols
- TC: Total capacity [kW]
- PI: Power input [kW]
- ①: Indoor unit combinations
- ②: Outdoor temperature [°C DB]

Notes
1. The capacities are based on the following conditions:
   Corresponding refrigerant piping length: ·5· m
   Level difference: ·0·m
2. The bold cells indicate the standard conditions.
3. The values above are for connecting with the following indoor unit types:
   ·2.0, 2.5, 3.5· kW class
   Wall-mounted ·FTXF-A, FTXF-B· series

3D126709A

5 Capacity tables

5 - 2 Cooling Capacity Tables

3MXF68A

Cooling ·(50Hz 230V)·

①	②	Indoor air temperature [°C WB]											
		14°C		16°C		18°C		19°C		22°C		24°C	
		TC	PI	TC	PI	TC	PI	TC	PI	TC	PI	TC	PI
		kW	kW	kW	kW	kW	kW	kW	kW	kW	kW	kW	kW
2,0	22,0	2,70	0,54	2,82	0,55	2,94	0,56	3,00	0,56	3,18	0,58	3,30	0,59
	25,0	2,62	0,56	2,74	0,57	2,86	0,58	2,92	0,58	3,11	0,61	3,23	0,62
	32,0	2,45	0,61	2,57	0,62	2,69	0,63	2,75	0,64	2,94	0,65	3,06	0,66
	35,0	2,38	0,64	2,50	0,65	2,62	0,66	2,68	0,66	2,86	0,68	2,98	0,69
	40,0	2,25	0,67	2,38	0,68	2,50	0,69	2,56	0,70	2,74	0,72	2,86	0,73
	43,0	2,18	0,70	2,30	0,72	2,42	0,73	2,48	0,73	2,67	0,75	2,79	0,76
	46,0	2,11	0,73	2,23	0,74	2,35	0,75	2,41	0,76	2,59	0,77	2,71	0,78
2,5	22,0	3,46	0,78	3,58	0,79	3,70	0,80	3,76	0,80	3,94	0,83	4,06	0,84
	25,0	3,38	0,80	3,50	0,81	3,62	0,83	3,68	0,83	3,87	0,85	3,99	0,86
	32,0	3,21	0,85	3,33	0,86	3,45	0,87	3,51	0,88	3,70	0,89	3,82	0,90
	35,0	3,14	0,88	3,26	0,89	3,38	0,90	3,44	0,90	3,62	0,92	3,74	0,94
	40,0	3,01	0,91	3,14	0,92	3,26	0,94	3,32	0,95	3,50	0,96	3,62	0,97
	43,0	2,94	0,95	3,06	0,96	3,18	0,97	3,24	0,97	3,43	0,99	3,55	1,00
	46,0	2,87	0,97	2,99	0,98	3,11	0,99	3,17	1,00	3,35	1,01	3,47	1,02
3,5	22,0	3,48	0,77	4,25	0,99	5,08	1,24	5,44	1,35	5,77	1,39	5,98	1,42
	25,0	3,48	0,83	4,25	1,06	5,08	1,33	5,30	1,40	5,63	1,44	5,85	1,46
	32,0	3,48	0,99	4,25	1,28	4,88	1,51	4,99	1,52	5,32	1,56	5,54	1,58
	35,0	3,48	1,07	4,25	1,39	4,75	1,56	4,86	1,57	5,19	1,62	5,41	1,64
	40,0	3,48	1,23	4,25	1,60	4,53	1,66	4,64	1,67	4,97	1,72	5,19	1,74
	43,0	3,48	1,34	4,18	1,69	4,40	1,73	4,51	1,74	4,83	1,77	5,05	1,80
	46,0	3,48	1,47	4,04	1,76	4,26	1,79	4,37	1,80	4,70	1,84	4,92	1,87
2.0+2.0	22,0	5,15	1,13	5,38	1,16	5,61	1,19	5,73	1,20	6,07	1,23	6,31	1,27
	25,0	5,01	1,18	5,24	1,21	5,47	1,23	5,59	1,24	5,93	1,29	6,17	1,31
	32,0	4,68	1,30	4,91	1,33	5,14	1,35	5,26	1,36	5,61	1,41	5,84	1,43
	35,0	4,54	1,35	4,77	1,39	5,00	1,41	5,12	1,42	5,47	1,46	5,70	1,49
	40,0	4,31	1,45	4,54	1,49	4,77	1,51	4,89	1,52	5,23	1,56	5,46	1,58
	43,0	4,17	1,52	4,40	1,54	4,63	1,57	4,75	1,58	5,09	1,62	5,32	1,65
	46,0	4,03	1,58	4,26	1,61	4,49	1,63	4,61	1,65	4,95	1,68	5,18	1,71
2.0+2.5	22,0	5,47	1,29	5,70	1,31	5,93	1,34	6,05	1,35	6,39	1,39	6,63	1,42
	25,0	5,33	1,33	5,56	1,36	5,79	1,39	5,91	1,40	6,25	1,44	6,49	1,46
	32,0	5,00	1,45	5,23	1,49	5,46	1,51	5,58	1,52	5,93	1,56	6,16	1,58
	35,0	4,86	1,51	5,09	1,54	5,32	1,56	5,44	1,57	5,79	1,62	6,02	1,64
	40,0	4,63	1,61	4,86	1,64	5,09	1,66	5,21	1,67	5,55	1,72	5,78	1,74
	43,0	4,49	1,67	4,72	1,69	4,95	1,73	5,07	1,74	5,41	1,77	5,64	1,80
	46,0	4,35	1,74	4,58	1,76	4,81	1,78	4,93	1,80	5,27	1,84	5,50	1,86
2.0+3.5	22,0	6,34	1,68	6,62	1,72	6,91	1,76	7,05	1,77	7,48	1,83	7,76	1,87
	25,0	6,16	1,76	6,45	1,78	6,73	1,83	6,88	1,85	7,30	1,90	7,59	1,94
	32,0	5,76	1,93	6,05	1,97	6,33	2,00	6,47	2,02	6,90	2,08	7,18	2,11
	35,0	5,59	2,01	5,87	2,05	6,16	2,09	6,30	2,10	6,73	2,16	7,01	2,20
	40,0	5,30	2,16	5,59	2,19	5,87	2,23	6,01	2,24	6,44	2,31	6,72	2,34
	43,0	5,13	2,24	5,40	2,28	5,65	2,28	5,77	2,28	6,13	2,28	6,37	2,28
	46,0	4,41	1,72	4,61	1,72	4,80	1,72	4,90	1,72	5,18	1,72	5,66	1,72

①	②	Indoor air temperature [°C WB]											
		14°C		16°C		18°C		19°C		22°C		24°C	
		TC	PI	TC	PI	TC	PI	TC	PI	TC	PI	TC	PI
		kW	kW	kW	kW	kW	kW	kW	kW	kW	kW	kW	kW
2.5+2.5	22,0	6,13	1,67	6,36	1,69	6,59	1,73	6,71	1,74	7,05	1,77	7,29	1,80
	25,0	5,99	1,72	6,22	1,75	6,45	1,77	6,57	1,78	6,91	1,83	7,15	1,85
	32,0	5,66	1,84	5,89	1,87	6,12	1,89	6,24	1,90	6,59	1,95	6,82	1,97
	35,0	5,52	1,89	5,75	1,93	5,98	1,95	6,10	1,96	6,45	2,00	6,68	2,02
	40,0	5,29	1,99	5,52	2,02	5,75	2,05	5,87	2,06	6,21	2,10	6,44	2,12
	43,0	5,15	2,06	5,38	2,08	5,61	2,11	5,73	2,12	6,07	2,16	6,30	2,19
	46,0	5,01	2,12	5,24	2,15	5,47	2,17	5,59	2,19	5,93	2,22	6,16	2,24
2.5+3.5	22,0	6,61	1,90	6,89	1,94	7,18	1,98	7,32	1,99	7,75	2,05	8,03	2,09
	25,0	6,43	1,98	6,72	2,00	7,00	2,05	7,15	2,07	7,57	2,12	7,86	2,16
	32,0	6,03	2,15	6,32	2,19	6,60	2,22	6,74	2,24	7,17	2,30	7,45	2,33
	35,0	5,86	2,23	6,14	2,27	6,43	2,31	6,57	2,32	7,00	2,38	7,28	2,42
	40,0	5,57	2,38	5,86	2,41	6,14	2,45	6,28	2,46	6,71	2,53	6,99	2,56
	43,0	5,40	2,46	5,67	2,50	5,92	2,50	6,04	2,50	6,40	2,50	6,64	2,50
	46,0	4,68	1,94	4,88	1,94	5,07	1,94	5,17	1,94	5,45	1,94	5,93	1,94
3.5+3.5	22,0	6,90	1,97	7,49	2,13	7,82	2,18	7,98	2,20	8,46	2,28	8,78	2,32
	25,0	6,90	2,12	7,30	2,22	7,62	2,27	7,78	2,29	8,26	2,35	8,59	2,41
	32,0	6,52	2,39	6,84	2,44	7,16	2,49	7,33	2,51	7,81	2,57	8,13	2,63
	35,0	6,32	2,50	6,65	2,54	6,97	2,59	7,13	2,61	7,61	2,68	7,94	2,73
	40,0	6,00	2,67	6,32	2,72	6,64	2,76	6,79	2,77	7,22	2,77	7,50	2,77
	43,0	5,48	2,22	5,73	2,22	5,97	2,22	6,09	2,22	6,44	2,22	6,67	2,22
	46,0	4,72	1,66	4,92	1,66	5,11	1,66	5,20	1,66	5,47	1,66	5,65	1,66
2.0+2.0+2.0	22,0	6,68	1,47	6,98	1,51	7,28	1,54	7,43	1,56	7,88	1,61	8,18	1,64
	25,0	6,50	1,54	6,80	1,57	7,10	1,61	7,25	1,62	7,70	1,67	8,00	1,71
	32,0	6,07	1,69	6,37	1,73	6,67	1,76	6,82	1,78	7,27	1,83	7,57	1,86
	35,0	5,89	1,77	6,19	1,80	6,49	1,84	6,64	1,85	7,09	1,90	7,39	1,94
	40,0	4,59	1,89	5,89	1,93	6,19	1,96	6,34	1,98	6,79	2,02	7,09	2,06
	43,0	4,41	1,98	5,71	2,01	6,01	2,05	6,15	2,06	6,60	2,11	6,90	2,15
	46,0	3,84	1,75	5,07	1,75	5,29	1,75	5,40	1,75	5,71	1,75	5,92	1,75

Symbols

TC: Total capacity [kW]
PI: Power input [kW]
①: Indoor unit combinations
②: Outdoor temperature [°C DB]

Notes

1. The capacities are based on the following conditions:
   Corresponding refrigerant piping length: ·5· m
   Level difference: ·0·m
2. The bold cells indicate the standard conditions.
3. The values above are for connecting with the following indoor unit types:
   ·2.0, 2.5, 3.5· kW class
   Wall-mounted ·FTXF-A, FTXF-B· series

3D126712A

3MXF68A

Cooling ·(50Hz 230V)·

①	②	Indoor air temperature [°C WB]											
		14°C		16°C		18°C		19°C		22°C		24°C	
		TC	PI	TC	PI	TC	PI	TC	PI	TC	PI	TC	PI
		kW	kW	kW	kW	kW	kW	kW	kW	kW	kW	kW	kW
2.0+2.0+2.5	22,0	7,07	1,71	7,37	1,74	7,67	1,77	7,82	1,79	8,27	1,84	8,57	1,87
	25,0	6,89	1,77	7,19	1,80	7,49	1,84	7,64	1,85	8,09	1,90	8,39	1,94
	32,0	6,46	1,93	6,76	1,96	7,06	1,99	7,21	2,01	7,66	2,06	7,96	2,09
	35,0	6,28	2,00	6,58	2,04	6,88	2,07	7,03	2,08	7,48	2,13	7,78	2,17
	40,0	4,98	2,12	6,28	2,16	6,58	2,19	6,73	2,21	7,18	2,26	7,48	2,29
	43,0	4,80	2,21	6,10	2,24	6,40	2,28	6,54	2,29	6,99	2,34	7,29	2,38
	46,0	4,23	1,98	5,46	1,98	5,68	1,98	5,79	1,98	6,10	1,98	6,31	1,98
2.0+2.0+3.5	22,0	7,44	1,84	7,78	1,88	8,11	1,93	8,28	1,95	8,78	2,00	9,11	2,05
	25,0	7,24	1,91	7,57	1,96	7,91	2,00	8,08	2,01	8,58	2,08	8,91	2,12
	32,0	6,77	2,11	7,10	2,15	7,44	2,19	7,60	2,21	8,10	2,28	8,44	2,31
	35,0	6,56	2,20	6,90	2,24	7,23	2,28	7,40	2,30	7,90	2,37	8,24	2,41
	40,0	6,23	2,35	6,56	2,40	6,90	2,44	7,06	2,46	7,56	2,52	7,90	2,56
	43,0	5,84	2,26	6,12	2,26	6,39	2,26	6,52	2,26	6,90	2,26	7,16	2,26
	46,0	4,95	1,69	5,16	1,69	5,37	1,69	5,47	1,69	5,78	1,69	5,97	1,69
2.0+2.5+2.5	22,0	7,28	1,84	7,58	1,87	7,88	1,90	8,03	1,93	8,48	1,97	8,78	2,00
	25,0	7,10	1,90	7,40	1,94	7,70	1,97	7,85	1,98	8,30	2,04	8,60	2,07
	32,0	6,67	2,06	6`.97	2,09	7,27	2,12	7,42	2,15	7,87	2,19	8,17	2,22
	35,0	6,49	2,13	6,79	2,17	7,09	2,20	7,24	2,21	7,69	2,27	7,99	2,30
	40,0	5,19	2,26	6,49	2,29	6,79	2,32	6,94	2,34	7,39	2,39	7,69	2,42
	43,0	5,01	2,34	6,31	2,38	6,61	2,41	6,75	2,42	7,20	2,48	7,50	2,51
	46,0	4,44	2,11	5,67	2,11	5,89	2,11	6,00	2,11	6,31	2,11	6,52	2,11
2.0+2.5+3.5	22,0	7,78	2,08	8,12	2,12	8,45	2,17	8,62	2,19	9,12	2,24	9,45	2,29
	25,0	7,58	2,16	7,91	2,20	8,25	2,24	8,42	2,26	8,92	2,32	9,25	2,37
	32,0	7,11	2,35	7,44	2,39	7,78	2,43	7,94	2,45	8,44	2,52	8,78	2,55
	35,0	6,90	2,44	7,24	2,49	7,57	2,52	7,74	2,54	8,24	2,61	8,58	2,65
	40,0	6,57	2,60	6,90	2,64	7,24	2,68	7,40	2,71	7,90	2,76	8,24	2,81
	43,0	6,18	2,50	6,46	2,50	6,73	2,50	6,86	2,50	7,24	2,50	7,50	2,50
	46,0	5,29	1,94	5,50	1,94	5,71	1,94	5,81	1,94	6,12	1,94	6,31	1,94
2.0+3.5+3.5	22,0	8,12	2,23	8,48	2,29	8,85	2,33	9,03	2,37	9,57	2,43	9,94	2,49
	25,0	7,90	2,33	8,26	2,38	8,62	2,43	8,81	2,45	9,35	2,53	9,72	2,57
	32,0	7,38	2,56	7,74	2,62	8,11	2,66	8,29	2,68	8,84	2,76	9,20	2,82
	35,0	7,16	2,67	7,52	2,72	7,89	2,77	8,07	2,79	8,62	2,87	8,98	2,93
	40,0	6,73	2,75	7,05	2,75	7,37	2,75	7,52	2,75	7,98	2,75	8,27	2,75
	43,0	6,04	2,20	6,30	2,20	6,56	2,20	6,69	2,20	7,06	2,20	7,30	2,20
	46,0	5,16	1,64	5,36	1,64	5,56	1,64	5,66	1,64	5,95	1,64	6,14	1,64

①	②	Indoor air temperature [°C WB]											
		14°C		16°C		18°C		19°C		22°C		24°C	
		TC	PI	TC	PI	TC	PI	TC	PI	TC	PI	TC	PI
		kW	kW	kW	kW	kW	kW	kW	kW	kW	kW	kW	kW
2.5+2.5+2.5	22,0	7,57	2,02	7,87	2,06	8,17	2,09	8,32	2,11	8,77	2,16	9,07	2,19
	25,0	7,39	2,09	7,69	2,12	7,99	2,16	8,14	2,17	8,59	2,22	8,89	2,26
	32,0	6,96	2,24	7,26	2,28	7,56	2,31	7,71	2,33	8,16	2,38	8,46	2,41
	35,0	6,78	2,32	7,08	2,35	7,38	2,39	7,53	2,40	7,98	2,45	8,28	2,49
	40,0	5,48	2,44	6,78	2,48	7,08	2,51	7,23	2,53	7,68	2,57	7,98	2,61
	43,0	5,30	2,53	6,60	2,56	6,90	2,60	7,04	2,61	7,49	2,66	7,79	2,70
	46,0	4,73	2,30	5,96	2,30	6,18	2,30	6,29	2,30	6,60	2,30	6,81	2,30
2.5+2.5+3.5	22,0	7,98	2,23	8,32	2,28	8,65	2,32	8,82	2,34	9,32	2,40	9,65	2,44
	25,0	7,78	2,31	8,11	2,35	8,45	2,40	8,62	2,41	9,12	2,48	9,45	2,52
	32,0	7,31	2,51	7,64	2,54	7,98	2,59	8,14	2,61	8,64	2,67	8,98	2,71
	35,0	7,10	2,60	7,44	2,64	7,77	2,67	7,94	2,70	8,44	2,76	8,78	2,81
	40,0	6,77	2,75	7,10	2,79	7,44	2,84	7,60	2,86	8,10	2,92	8,44	2,96
	43,0	6,38	2,65	6,66	2,65	6,93	2,65	7,06	2,65	7,44	2,65	7,70	2,65
	46,0	5,49	2,09	5,70	2,09	5,91	2,09	6,01	2,09	6,32	2,09	6,51	2,09
2.5+3.5+3.5	22,0	8,35	2,43	8,71	2,49	9,08	2,53	9,26	2,56	9,80	2,63	10,17	2,68
	25,0	8,13	2,53	8,49	2,57	8,85	2,63	9,04	2,65	9,58	2,73	9,95	2,77
	32,0	7,61	2,76	7,97	2,82	8,34	2,86	8,52	2,88	9,07	2,96	9,43	3,01
	35,0	7,39	2,87	7,75	2,92	8,12	2,97	8,30	2,99	8,85	3,07	9,21	3,12
	40,0	6,96	2,95	7,28	2,95	7,60	2,95	7,75	2,95	8,21	2,95	8,50	2,95
	43,0	6,27	2,40	6,53	2,40	6,79	2,40	6,92	2,40	7,29	2,40	7,53	2,40
	46,0	5,39	1,84	5,59	1,84	5,79	1,84	5,89	1,84	6,18	1,84	6,37	1,84
3.5+3.5+3.5	22,0	8,64	2,61	9,03	2,66	9,42	2,72	9,61	2,75	10,19	2,84	10,58	2,89
	25,0	8,40	2,71	8,79	2,77	9,18	2,83	9,37	2,86	9,96	2,95	10,34	3,00
	32,0	7,86	2,98	8,24	3,05	8,63	3,10	8,83	3,14	9,41	3,22	9,80	3,28
	35,0	7,62	3,11	8,01	3,17	8,40	3,23	8,59	3,26	9,17	3,34	9,56	3,41
	40,0	6,99	2,68	7,31	2,68	7,62	2,68	7,77	2,68	8,21	2,68	8,50	2,68
	43,0	6,32	2,13	6,57	2,13	6,83	2,13	6,95	2,13	7,31	2,13	7,55	2,13
	46,0	5,42	1,57	5,62	1,57	5,82	1,57	5,91	1,57	6,20	1,57	6,38	1,57

Symbols

TC: Total capacity [kW]
PI: Power input [kW]
①: Indoor unit combinations
②: Outdoor temperature [°C DB]

Notes

1. The capacities are based on the following conditions:
   Corresponding refrigerant piping length: ·5· m
   Level difference: ·0·m
2. The bold cells indicate the standard conditions.
3. The values above are for connecting with the following indoor unit types:
   ·2.0, 2.5, 3.5· kW class
   Wall-mounted ·FTXF-A, FTXF-B· series

3D126713A

5 Capacity tables

5 - 3 Heating Capacity Tables

3MXF52A

Heating ·(50Hz 230V)·

①	②	Indoor air temperature [°C DB]											
		16°C		18°C		20°C		21°C		22°C		24°C	
		TC	PI	TC	PI	TC	PI	TC	PI	TC	PI	TC	PI
		kW	kW	kW	kW	kW	kW	kW	kW	kW	kW	kW	kW
2,0	-15,0	2,13	1,37	2,07	1,38	2,02	1,39	2,00	1,40	1,97	1,41	1,92	1,42
	-10,0	2,55	1,19	2,50	1,20	2,44	1,21	2,42	1,22	2,39	1,22	2,34	1,23
	-5,0	2,97	1,24	2,92	1,25	2,87	1,26	2,84	1,27	2,82	1,27	2,76	1,28
	0,0	3,40	1,29	3,34	1,30	3,29	1,31	3,27	1,32	3,24	1,32	3,19	1,33
	6,0	3,90	1,35	3,85	1,36	3,80	1,37	3,77	1,38	3,75	1,38	3,70	1,39
	10,0	4,24	1,39	4,19	1,40	4,14	1,41	4,11	1,41	4,09	1,42	4,04	1,43
	15,0	4,67	1,44	4,61	1,45	4,56	1,46	4,54	1,46	4,51	1,47	4,46	1,48
2,5	-15,0	2,53	1,49	2,47	1,50	2,42	1,51	2,40	1,52	2,37	1,53	2,32	1,53
	-10,0	2,95	1,29	2,90	1,30	2,84	1,31	2,82	1,32	2,79	1,32	2,74	1,33
	-5,0	3,37	1,34	3,32	1,35	3,27	1,36	3,24	1,41	3,22	1,41	3,16	1,42
	0,0	3,80	1,39	3,74	1,40	3,69	1,41	3,67	1,42	3,64	1,42	3,59	1,43
	6,0	4,30	1,45	4,25	1,45	4,20	1,46	4,17	1,47	4,15	1,47	4,10	1,48
	10,0	4,64	1,48	4,59	1,49	4,54	1,50	4,51	1,50	4,49	1,51	4,44	1,52
	15,0	5,07	1,53	5,01	1,54	4,96	1,55	4,94	1,55	4,91	1,56	4,86	1,57
3,5	-15,0	2,65	1,88	2,58	1,88	2,51	1,90	2,48	1,92	2,45	1,93	2,38	1,95
	-10,0	3,19	1,64	3,12	1,65	3,06	1,67	3,03	1,68	2,99	1,68	2,93	1,70
	-5,0	3,74	1,70	3,67	1,71	3,60	1,73	3,57	1,75	3,54	1,74	3,47	1,76
	0,0	4,28	1,77	4,21	1,78	4,15	1,80	4,11	1,80	4,08	1,81	4,01	1,83
	6,0	4,93	1,85	4,87	1,86	4,80	1,88	4,77	1,89	4,73	1,90	4,67	1,91
	10,0	5,37	1,91	5,30	1,92	5,24	1,94	5,20	1,94	5,17	1,95	5,10	1,97
	15,0	5,91	1,97	5,85	1,99	5,78	2,00	5,75	2,01	5,71	2,02	5,65	2,03
2.0+2.0	-15,0	3,87	2,41	3,78	2,44	3,68	2,46	3,63	2,48	3,58	2,50	3,49	2,52
	-10,0	4,66	2,12	4,57	2,14	4,47	2,16	4,42	2,17	4,37	2,18	4,28	2,20
	-5,0	5,45	2,20	5,36	2,22	5,26	2,24	5,21	2,25	5,16	2,26	5,07	2,28
	0,0	6,24	2,30	6,15	2,32	6,05	2,34	6,00	2,35	5,95	2,36	5,86	2,38
	6,0	7,19	2,41	7,10	2,43	7,00	2,45	6,95	2,46	6,90	2,47	6,81	2,49
	10,0	7,83	2,48	7,73	2,50	7,63	2,53	7,58	2,54	7,54	2,55	7,44	2,57
	15,0	8,62	2,58	8,52	2,60	8,42	2,62	8,37	2,63	8,33	2,64	8,23	2,66
2.0+2.5	-15,0	3,87	2,40	3,78	2,43	3,68	2,45	3,63	2,47	3,58	2,49	3,49	2,50
	-10,0	4,66	2,11	4,57	2,12	4,47	2,14	4,42	2,16	4,37	2,17	4,28	2,19
	-5,0	5,45	2,19	5,36	2,21	5,26	2,23	5,21	2,24	5,16	2,25	5,07	2,27
	0,0	6,24	2,29	6,15	2,31	6,05	2,33	6,00	2,34	5,95	2,35	5,86	2,37
	6,0	7,19	2,40	7,10	2,42	7,00	2,44	6,95	2,45	6,90	2,46	6,81	2,48
	10,0	7,83	2,47	7,73	2,49	7,63	2,52	7,58	2,53	7,54	2,54	7,44	2,56
	15,0	8,62	2,57	8,52	2,59	8,42	2,61	8,37	2,62	8,33	2,63	8,23	2,65

①	②	Indoor air temperature [°C DB]											
		16°C		18°C		20°C		21°C		22°C		24°C	
		TC	PI	TC	PI	TC	PI	TC	PI	TC	PI	TC	PI
		kW	kW	kW	kW	kW	kW	kW	kW	kW	kW	kW	kW
2.0+3.5	-15,0	3,96	2,41	3,86	2,44	3,76	2,46	3,71	2,48	3,66	2,50	3,57	2,52
	-10,0	4,75	2,12	4,65	2,14	4,56	2,16	4,51	2,17	4,46	2,18	4,36	2,20
	-5,0	5,55	2,20	5,45	2,22	5,35	2,24	5,30	2,25	5,25	2,26	5,16	2,28
	0,0	6,34	2,30	6,24	2,32	6,15	2,34	6,10	2,35	6,05	2,36	5,95	2,38
	6,0	7,29	2,41	7,20	2,43	7,10	2,45	7,05	2,46	7,00	2,47	6,91	2,49
	10,0	7,93	2,48	7,83	2,50	7,74	2,53	7,69	2,54	7,64	2,55	7,54	2,57
	15,0	8,73	2,58	8,63	2,60	8,53	2,62	8,48	2,63	8,43	2,64	8,34	2,66
2.5+2.5	-15,0	3,87	2,37	3,78	2,40	3,68	2,42	3,63	2,44	3,58	2,46	3,49	2,48
	-10,0	4,66	2,08	4,57	2,10	4,47	2,12	4,42	2,13	4,37	2,14	4,28	2,16
	-5,0	5,45	2,17	5,36	2,19	5,26	2,21	5,21	2,22	5,16	2,23	5,07	2,25
	0,0	6,24	2,27	6,15	2,29	6,05	2,31	6,00	2,32	5,95	2,33	5,86	2,35
	6,0	7,19	2,37	7,10	2,39	7,00	2,41	6,95	2,42	6,90	2,43	6,81	2,45
	10,0	7,83	2,44	7,73	2,46	7,63	2,49	7,58	2,51	7,54	2,51	7,44	2,54
	15,0	8,62	2,54	8,52	2,56	8,42	2,59	8,37	2,59	8,33	2,60	8,23	2,62
2.5+3.5	-15,0	4,06	2,53	3,96	2,56	3,86	2,58	3,81	2,60	3,76	2,62	3,67	2,64
	-10,0	4,85	2,22	4,75	2,24	4,66	2,26	4,61	2,27	4,56	2,28	4,46	2,30
	-5,0	5,65	2,30	5,55	2,32	5,45	2,34	5,40	2,35	5,35	2,36	5,26	2,38
	0,0	6,44	2,40	6,34	2,42	6,25	2,44	6,20	2,45	6,15	2,46	6,05	2,48
	6,0	7,39	2,51	7,30	2,52	7,20	2,55	7,15	2,55	7,10	2,57	7,01	2,58
	10,0	8,03	2,57	7,93	2,60	7,84	2,62	7,79	2,64	7,74	2,65	7,64	2,67
	15,0	8,83	2,67	8,73	2,70	8,63	2,72	8,58	2,72	8,53	2,73	8,44	2,75
3.5+3.5	-15,0	4,08	2,56	3,98	2,58	3,88	2,59	3,83	2,61	3,78	2,63	3,68	2,66
	-10,0	4,89	2,24	4,79	2,26	4,69	2,28	4,64	2,29	4,59	2,30	4,49	2,32
	-5,0	5,71	2,32	5,61	2,35	5,51	2,37	5,46	2,38	5,41	2,39	5,31	2,41
	0,0	6,52	2,42	6,42	2,44	6,32	2,46	6,27	2,47	6,22	2,49	6,12	2,51
	6,0	7,50	2,54	7,40	2,56	7,30	2,58	7,25	2,59	7,20	2,60	7,10	2,62
	10,0	8,15	2,62	8,05	2,64	7,95	2,66	7,90	2,67	7,85	2,68	7,75	2,70
	15,0	8,97	2,71	8,87	2,73	8,77	2,75	8,72	2,76	8,67	2,78	8,57	2,80

Symbols
- TC: Total capacity [kW]
- PI: Power input [kW]
- ①: Indoor unit combinations
- ②: Outdoor temperature [°C WB]

Notes
1. The capacities are based on the following conditions:
   Corresponding refrigerant piping length: ·5· m
   Level difference: ·0·m
2. The bold cells indicate the standard conditions.
3. The values above are for connecting with the following indoor unit types:
   ·2.0, 2.5, 3.5· kW class
   Wall-mounted ·FTXF-A, FTXF-B· series
4. The heating capacity does not include the capacity drop that occurs during a frosting period and defrost operation.

3D126710A

3MXF52A

Heating ·(50Hz 230V)·

①	②	Indoor air temperature [°C DB]											
		16°C		18°C		20°C		21°C		22°C		24°C	
		TC	PI	TC	PI	TC	PI	TC	PI	TC	PI	TC	PI
		kW	kW	kW	kW	kW	kW	kW	kW	kW	kW	kW	kW
2.0+2.0+2.0	-15,0	4,40	2,28	4,29	2,30	4,18	2,32	4,13	2,33	4,07	2,35	3,96	2,37
	-10,0	5,31	1,99	5,20	2,01	5,09	2,03	5,04	2,04	4,98	2,05	4,87	2,07
	-5,0	6,22	2,08	6,11	2,10	6,00	2,12	5,94	2,13	5,89	2,14	5,78	2,15
	0,0	7,13	2,17	7,02	2,18	6,91	2,20	6,85	2,21	6,80	2,22	6,69	2,24
	6,0	8,22	2,27	8,11	2,28	8,00	2,31	7,94	2,31	7,89	2,33	7,78	2,34
	10,0	8,95	2,34	8,84	2,36	8,73	2,37	8,67	2,39	8,62	2,40	8,50	2,42
	15,0	9,86	2,43	9,75	2,45	9,64	2,47	9,58	2,48	9,53	2,49	9,41	2,51
2.0+2.0+2.5	-15,0	4,40	2,26	4,29	2,28	4,18	2,30	4,13	2,31	4,07	2,33	3,96	2,35
	-10,0	5,31	1,97	5,20	1,99	5,09	2,01	5,04	2,02	4,98	2,03	4,87	2,05
	-5,0	6,22	2,06	6,11	2,08	6,00	2,10	5,94	2,11	5,89	2,12	5,78	2,14
	0,0	7,13	2,15	7,02	2,16	6,91	2,19	6,85	2,19	6,80	2,19	6,69	2,22
	6,0	8,23	2,24	8,11	2,26	8,00	2,28	7,94	2,29	7,89	2,30	7,78	2,32
	10,0	8,98	2,31	8,86	2,33	8,75	2,35	8,69	2,36	8,63	2,37	8,52	2,39
	15,0	9,91	2,40	9,80	2,42	9,68	2,44	9,62	2,45	9,57	2,46	9,45	2,47
2.0+2.0+3.5	-15,0	4,52	2,26	4,41	2,28	4,30	2,30	4,24	2,32	4,19	2,34	4,07	2,36
	-10,0	5,42	1,98	5,31	2,00	5,20	2,02	5,15	2,03	5,09	2,04	4,98	2,06
	-5,0	6,33	2,07	6,22	2,09	6,11	2,11	6,05	2,12	6,00	2,13	5,89	2,14
	0,0	7,23	2,16	7,12	2,16	7,01	2,19	6,96	2,19	6,90	2,21	6,79	2,23
	6,0	8,32	2,25	8,21	2,27	8,10	2,29	8,04	2,30	7,99	2,31	7,88	2,33
	10,0	9,05	2,32	8,94	2,34	8,82	2,36	8,77	2,37	8,71	2,38	8,60	2,40
	15,0	9,95	2,41	9,84	2,43	9,73	2,46	9,67	2,46	9,62	2,47	9,51	2,49
2.0+2.5+2.5	-15,0	4,40	2,22	4,29	2,24	4,18	2,26	4,13	2,28	4,07	2,30	3,96	2,32
	-10,0	5,31	1,95	5,20	1,97	5,09	1,99	5,04	2,00	4,98	2,01	4,87	2,03
	-5,0	6,22	2,04	6,11	2,06	6,00	2,08	5,94	2,09	5,89	2,10	5,78	2,11
	0,0	7,13	2,12	7,02	2,13	6,91	2,15	6,85	2,16	6,80	2,17	6,69	2,19
	6,0	8,22	2,22	8,11	2,24	8,00	2,26	7,94	2,27	7,89	2,28	7,78	2,30
	10,0	8,95	2,29	8,84	2,31	8,73	2,33	8,67	2,34	8,62	2,35	8,50	2,37
	15,0	9,86	2,38	9,75	2,40	9,64	2,42	9,58	2,43	9,53	2,44	9,41	2,46
2.0+2.5+3.5	-15,0	4,41	2,26	4,29	2,28	4,18	2,30	4,18	2,31	4,12	2,33	4,01	2,35
	-10,0	5,34	1,97	5,23	1,99	5,11	2,01	5,05	2,02	5,00	2,03	4,88	2,05
	-5,0	6,27	2,06	6,16	2,08	6,05	2,10	5,99	2,11	5,93	2,12	5,82	2,14
	0,0	7,21	2,15	7,09	2,16	6,98	2,19	6,92	2,19	6,87	2,19	6,75	2,22
	6,0	8,33	2,24	8,21	2,26	8,10	2,28	8,04	2,29	7,99	2,30	7,87	2,32
	10,0	9,08	2,31	8,96	2,33	8,85	2,35	8,79	2,36	8,73	2,37	8,62	2,39
	15,0	10,01	2,40	9,90	2,42	9,78	2,44	9,72	2,45	9,67	2,46	9,55	2,47

①	②	Indoor air temperature [°C DB]											
		16°C		18°C		20°C		21°C		22°C		24°C	
		TC	PI	TC	PI	TC	PI	TC	PI	TC	PI	TC	PI
		kW	kW	kW	kW	kW	kW	kW	kW	kW	kW	kW	kW
2.0+3.5+3.5	-15,0	4,59	2,30	4,48	2,32	4,37	2,34	4,31	2,36	4,26	2,38	4,14	2,40
	-10,0	5,50	2,02	5,39	2,04	5,28	2,06	5,22	2,07	5,17	2,08	5,06	2,10
	-5,0	6,42	2,10	6,30	2,12	6,19	2,14	6,14	2,15	6,08	2,16	5,97	2,17
	0,0	7,33	2,19	7,22	2,20	7,11	2,22	7,05	2,23	6,99	2,24	6,88	2,26
	6,0	8,42	2,29	8,31	2,31	8,20	2,33	8,14	2,34	8,09	2,35	7,98	2,37
	10,0	9,15	2,36	9,04	2,38	8,93	2,40	8,87	2,41	8,82	2,42	8,71	2,44
	15,0	10,07	2,45	9,95	2,47	9,84	2,49	9,79	2,50	9,73	2,51	9,62	2,53
2.5+2.5+2.5	-15,0	4,42	2,20	4,31	2,22	4,20	2,24	4,14	2,26	4,09	2,27	3,97	2,29
	-10,0	5,32	1,93	5,21	1,95	5,10	1,97	5,05	1,98	4,99	1,99	4,88	2,01
	-5,0	6,23	2,01	6,12	2,03	6,01	2,05	5,95	2,07	5,90	2,07	5,79	2,08
	0,0	7,13	2,10	7,02	2,11	6,91	2,13	6,86	2,14	6,80	2,15	6,69	2,17
	6,0	8,22	2,20	8,11	2,22	8,00	2,24	7,94	2,25	7,89	2,26	7,78	2,28
	10,0	8,95	2,27	8,84	2,29	8,72	2,31	8,67	2,32	8,61	2,33	8,50	2,35
	15,0	9,85	2,36	9,74	2,38	9,63	2,40	9,57	2,41	9,52	2,42	9,41	2,44
2.5+2.5+3.5	-15,0	4,50	2,22	4,39	2,24	4,28	2,26	4,23	2,28	4,17	2,30	4,06	2,32
	-10,0	5,41	1,95	5,30	1,97	5,19	1,99	5,14	2,00	5,08	2,01	4,97	2,03
	-5,0	6,32	2,04	6,21	2,06	6,10	2,08	6,04	2,09	5,99	2,10	5,88	2,11
	0,0	7,23	2,12	7,12	2,13	7,01	2,15	6,95	2,16	6,90	2,17	6,79	2,19
	6,0	8,32	2,22	8,21	2,24	8,10	2,26	8,04	2,27	7,99	2,28	7,88	2,30
	10,0	9,05	2,29	8,94	2,31	8,83	2,33	8,77	2,34	8,72	2,35	8,60	2,37
	15,0	9,96	2,38	9,85	2,40	9,74	2,42	9,68	2,43	9,63	2,44	9,51	2,46

Symbols
- TC: Total capacity [kW]
- PI: Power input [kW]
- ①: Indoor unit combinations
- ②: Outdoor temperature [°C WB]

Notes
1. The capacities are based on the following conditions:
   Corresponding refrigerant piping length: ·5· m
   Level difference: ·0·m
2. The bold cells indicate the standard conditions.
3. The values above are for connecting with the following indoor unit types:
   ·2.0, 2.5, 3.5· kW class
   Wall-mounted ·FTXF-A, FTXF-B· series
4. The heating capacity does not include the capacity drop that occurs during a frosting period and defrost operation.

3D126711A

5 Capacity tables

5 - 3 Heating Capacity Tables

3MXF68A

Heating ·(50Hz 230V)·

①	②	Indoor air temperature [°C DB]											
		16°C		18°C		20°C		21°C		22°C		24°C	
		TC	PI	TC	PI	TC	PI	TC	PI	TC	PI	TC	PI
		kW	kW	kW	kW	kW	kW	kW	kW	kW	kW	kW	kW
2,0	-15,0	2,60	1,16	2,55	1,17	2,51	1,18	2,48	1,19	2,46	1,19	2,41	1,20
	-10,0	2,98	1,21	2,93	1,22	2,88	1,23	2,86	1,24	2,84	1,24	2,79	1,25
	-5,0	3,35	1,27	3,31	1,28	3,26	1,29	3,24	1,30	3,21	1,30	3,17	1,31
	0,0	3,73	1,32	3,68	1,33	3,64	1,34	3,61	1,35	3,59	1,35	3,55	1,36
	6,0	4,18	1,39	4,14	1,40	4,09	1,41	4,07	1,42	4,04	1,42	4,00	1,43
	10,0	4,48	1,43	4,44	1,44	4,39	1,45	4,37	1,45	4,35	1,46	4,30	1,47
	15,0	4,86	1,49	4,81	1,50	4,77	1,51	4,75	1,51	4,72	1,52	4,68	1,53
2,5	-15,0	2,81	1,25	2,76	1,27	2,72	1,28	2,69	1,29	2,67	1,29	2,62	1,30
	-10,0	3,19	1,31	3,14	1,32	3,09	1,33	3,07	1,34	3,05	1,34	3,00	1,35
	-5,0	3,56	1,36	3,52	1,38	3,47	1,39	3,45	1,44	3,42	1,44	3,38	1,45
	0,0	3,94	1,42	3,89	1,43	3,85	1,44	3,82	1,45	3,80	1,45	3,76	1,46
	6,0	4,39	1,49	4,35	1,50	4,30	1,51	4,28	1,52	4,25	1,52	4,21	1,53
	10,0	4,69	1,53	4,65	1,54	4,60	1,55	4,58	1,55	4,56	1,56	4,51	1,57
	15,0	5,07	1,58	5,02	1,60	4,98	1,61	4,96	1,61	4,93	1,62	4,89	1,63
3,5	-15,0	2,91	1,57	2,86	1,58	2,82	1,61	2,79	1,62	2,77	1,62	2,72	1,64
	-10,0	3,29	1,65	3,24	1,66	3,19	1,68	3,17	1,69	3,15	1,69	3,10	1,72
	-5,0	3,84	1,73	3,77	1,74	3,70	1,76	3,67	1,77	3,64	1,77	3,57	1,79
	0,0	4,38	1,80	4,31	1,82	4,25	1,84	4,21	1,84	4,18	1,85	4,11	1,87
	6,0	5,03	1,89	4,97	1,90	4,90	1,93	4,87	1,94	4,83	1,95	4,77	1,96
	10,0	5,47	1,96	5,40	1,97	5,34	1,99	5,30	1,99	5,27	2,00	5,20	2,02
	15,0	6,01	2,02	5,95	2,05	5,88	2,06	5,85	2,07	5,81	2,08	5,75	2,09
2.0+2.0	-15,0	4,54	2,06	4,43	2,09	4,33	2,11	4,27	2,12	4,22	2,13	4,12	2,16
	-10,0	5,40	2,17	5,29	2,19	5,19	2,21	5,14	2,22	5,08	2,23	4,98	2,26
	-5,0	6,26	2,27	6,16	2,29	6,05	2,31	6,00	2,32	5,95	2,33	5,84	2,35
	0,0	7,13	2,38	7,02	2,40	6,91	2,42	6,86	2,43	6,81	2,44	6,70	2,46
	6,0	8,16	2,50	8,06	2,52	7,95	2,54	7,90	2,55	7,84	2,56	7,74	2,59
	10,0	8,85	2,57	8,75	2,60	8,64	2,63	8,59	2,64	8,53	2,65	8,43	2,67
	15,0	9,71	2,68	9,61	2,71	9,50	2,73	9,45	2,74	9,40	2,75	9,29	2,77
2.0+2.5	-15,0	4,71	2,07	4,60	2,10	4,50	2,12	4,44	2,13	4,39	2,15	4,29	2,17
	-10,0	5,57	2,18	5,46	2,20	5,36	2,22	5,31	2,23	5,25	2,24	5,15	2,27
	-5,0	6,43	2,28	6,33	2,30	6,22	2,32	6,17	2,33	6,12	2,34	6,01	2,37
	0,0	7,30	2,39	7,19	2,41	7,08	2,43	7,03	2,44	6,98	2,45	6,87	2,48
	6,0	8,33	2,51	8,23	2,53	8,12	2,55	8,07	2,56	8,01	2,57	7,91	2,60
	10,0	9,02	2,59	8,92	2,61	8,81	2,64	8,76	2,65	8,70	2,66	8,60	2,68
	15,0	9,88	2,70	9,78	2,72	9,67	2,74	9,62	2,75	9,57	2,76	9,46	2,78
2.0+3.5	-15,0	4,95	2,12	4,83	2,15	4,71	2,17	4,66	2,19	4,60	2,20	4,48	2,22
	-10,0	5,89	2,23	5,77	2,27	5,66	2,29	5,60	2,30	5,54	2,32	5,43	2,34
	-5,0	6,83	2,35	6,71	2,39	6,60	2,41	6,54	2,42	6,48	2,43	6,37	2,46
	0,0	7,77	2,48	7,66	2,51	7,54	2,53	7,48	2,54	7,42	2,55	7,31	2,59
	6,0	8,90	2,62	8,79	2,65	8,67	2,67	8,61	2,68	8,55	2,70	8,44	2,73
	10,0	9,65	2,72	9,54	2,74	9,42	2,77	9,37	2,78	9,31	2,79	9,19	2,82
	15,0	10,60	2,84	10,48	2,86	10,37	2,89	10,31	2,90	10,25	2,92	10,08	2,93

①	②	Indoor air temperature [°C DB]											
		16°C		18°C		20°C		21°C		22°C		24°C	
		TC	PI	TC	PI	TC	PI	TC	PI	TC	PI	TC	PI
		kW	kW	kW	kW	kW	kW	kW	kW	kW	kW	kW	kW
2.5+2.5	-15,0	5,08	2,12	4,97	2,15	4,87	2,17	4,81	2,18	4,76	2,19	4,66	2,21
	-10,0	5,94	2,22	5,83	2,24	5,73	2,27	5,68	2,28	5,62	2,29	5,52	2,31
	-5,0	6,80	2,33	6,70	2,35	6,59	2,38	6,54	2,39	6,49	2,40	6,38	2,42
	0,0	7,67	2,43	7,56	2,45	7,45	2,48	7,40	2,49	7,35	2,50	7,24	2,52
	6,0	8,70	2,55	8,60	2,57	8,49	2,60	8,44	2,61	8,38	2,62	8,28	2,64
	10,0	9,39	2,63	9,29	2,65	9,18	2,67	9,13	2,68	9,07	2,70	8,97	2,72
	15,0	10,25	2,74	10,15	2,76	10,04	2,78	9,99	2,79	9,94	2,81	9,83	2,83
2.5+3.5	-15,0	5,31	2,38	5,19	2,40	5,07	2,42	5,02	2,44	4,96	2,45	4,84	2,48
	-10,0	6,25	2,49	6,13	2,52	6,02	2,54	5,96	2,55	5,90	2,57	5,79	2,60
	-5,0	7,19	2,61	7,07	2,64	6,96	2,66	6,90	2,67	6,84	2,68	6,73	2,72
	0,0	8,13	2,73	8,02	2,76	7,90	2,78	7,84	2,79	7,78	2,81	7,67	2,84
	6,0	9,26	2,87	9,15	2,90	9,03	2,93	8,97	2,94	8,91	2,95	8,80	2,98
	10,0	10,01	2,97	9,90	2,99	9,78	3,03	9,73	3,04	9,67	3,05	9,55	3,07
	15,0	10,96	3,09	10,84	3,11	10,73	3,15	10,67	3,16	10,61	3,17	10,44	3,18
3.5+3.5	-15,0	5,35	2,50	5,23	2,52	5,10	2,55	5,04	2,57	4,98	2,59	4,85	2,62
	-10,0	6,37	2,63	6,25	2,66	6,12	2,70	6,06	2,71	6,00	2,73	5,87	2,76
	-5,0	7,39	2,77	7,26	2,81	7,14	2,84	7,08	2,85	7,01	2,87	6,89	2,89
	0,0	8,41	2,92	8,28	2,95	8,16	2,98	8,10	2,99	8,03	3,00	7,91	3,04
	6,0	9,63	3,08	9,50	3,11	9,38	3,15	9,32	3,16	9,26	3,18	9,13	3,21
	10,0	10,44	3,20	10,32	3,22	10,19	3,26	10,13	3,28	10,07	3,29	9,95	3,32
	15,0	11,46	3,33	11,34	3,37	11,21	3,40	11,15	3,41	10,87	3,43	10,26	3,45
2.0+2.0+2.0	-15,0	5,96	2,16	5,82	2,19	5,68	2,21	5,61	2,23	5,54	2,24	5,40	2,27
	-10,0	7,09	2,29	6,95	2,31	6,81	2,33	6,74	2,35	6,67	2,37	6,53	2,39
	-5,0	8,22	2,41	8,08	2,43	7,95	2,46	7,88	2,48	7,81	2,49	7,67	2,51
	0,0	9,36	2,53	9,22	2,55	9,08	2,59	9,01	2,60	8,94	2,61	8,80	2,64
	6,0	10,72	2,67	10,58	2,71	10,44	2,73	10,37	2,74	10,30	2,75	10,16	2,78
	10,0	11,62	2,77	11,49	2,79	11,35	2,83	11,28	2,84	11,21	2,85	11,07	2,88
	15,0	12,76	2,89	12,62	2,93	12,48	2,95	12,41	2,96	12,34	2,97	12,20	3,00

Symbols

TC: Total capacity [kW]
PI: Power input [kW]
①: Indoor unit combinations
②: Outdoor temperature [°C WB]

Notes

1. The capacities are based on the following conditions:
   Corresponding refrigerant piping length: ·5· m
   Level difference: ·0·m
2. The bold cells indicate the standard conditions.
3. The values above are for connecting with the following indoor unit types:
   ·2.0, 2.5, 3.5· kW class
   Wall-mounted ·FTXF-A, FTXF-B· series
4. The heating capacity does not include the capacity drop that occurs during a frosting period and defrost operation.

3D126714A

3MXF68A

Heating ·(50Hz 230V)·

①	②	Indoor air temperature [°C DB]											
		16°C		18°C		20°C		21°C		22°C		24°C	
		TC	PI	TC	PI	TC	PI	TC	PI	TC	PI	TC	PI
		kW	kW	kW	kW	kW	kW	kW	kW	kW	kW	kW	kW
2.0+2.0+2.5	-15,0	6,04	2,20	5,90	2,23	5,76	2,26	5,69	2,28	5,62	2,29	5,48	2,31
	-10,0	7,17	2,33	7,03	2,35	6,89	2,38	6,82	2,40	6,75	2,41	6,61	2,43
	-5,0	8,30	2,45	8,16	2,48	8,03	2,51	7,96	2,52	7,89	2,53	7,75	2,55
	0,0	9,44	2,57	9,30	2,60	9,16	2,63	9,09	2,64	9,02	2,65	8,88	2,68
	6,0	10,80	2,72	10,66	2,75	10,52	2,77	10,45	2,78	10,38	2,79	10,24	2,83
	10,0	11,70	2,82	11,57	2,84	11,43	2,87	11,36	2,88	11,29	2,89	11,15	2,93
	15,0	12,84	2,94	12,70	2,97	12,56	2,99	12,49	3,00	12,42	3,01	12,28	3,05
2.0+2.0+3.5	-15,0	6,12	2,32	5,97	2,37	5,83	2,38	5,76	2,39	5,69	2,41	5,55	2,43
	-10,0	7,27	2,45	7,13	2,48	6,99	2,51	6,92	2,52	6,85	2,54	6,70	2,56
	-5,0	8,42	2,59	8,28	2,61	8,14	2,64	8,07	2,65	8,00	2,68	7,86	2,70
	0,0	9,58	2,72	9,44	2,74	9,30	2,77	9,22	2,78	9,15	2,79	9,01	2,83
	6,0	10,96	2,87	10,82	2,89	10,68	2,93	10,61	2,94	10,54	2,96	10,40	2,98
	10,0	11,89	2,97	11,74	3,00	11,60	3,04	11,53	3,05	11,46	3,06	11,32	3,09
	15,0	13,04	3,10	12,90	3,14	12,76	3,16	12,69	3,18	12,62	3,19	12,48	3,22
2.0+2.5+2.5	-15,0	6,11	2,32	5,97	2,35	5,83	2,38	5,76	2,40	5,69	2,41	5,55	2,43
	-10,0	7,24	2,45	7,10	2,48	6,96	2,50	6,89	2,52	6,82	2,53	6,68	2,55
	-5,0	8,37	2,57	8,23	2,60	8,10	2,63	8,03	2,64	7,96	2,65	7,82	2,67
	0,0	9,51	2,70	9,37	2,72	9,23	2,75	9,16	2,76	9,09	2,77	8,95	2,81
	6,0	10,87	2,84	10,73	2,87	10,59	2,89	10,52	2,90	10,45	2,92	10,31	2,95
	10,0	11,77	2,94	11,64	2,96	11,50	2,99	11,43	3,00	11,36	3,01	11,22	3,05
	15,0	12,91	3,06	12,77	3,09	12,63	3,11	12,56	3,12	12,49	3,14	12,35	3,17
2.0+2.5+3.5	-15,0	6,12	2,32	5,97	2,37	5,83	2,39	5,76	2,40	5,69	2,41	5,55	2,43
	-10,0	7,27	2,45	7,13	2,48	6,99	2,51	6,92	2,52	6,85	2,54	6,70	2,56
	-5,0	8,42	2,59	8,28	2,61	8,14	2,64	8,07	2,65	8,00	2,68	7,86	2,70
	0,0	9,58	2,72	9,44	2,74	9,30	2,77	9,22	2,78	9,15	2,79	9,01	2,83
	6,0	10,96	2,87	10,82	2,89	10,68	2,93	10,61	2,94	10,54	2,96	10,40	2,98
	10,0	11,89	2,97	11,74	3,00	11,60	3,04	11,53	3,05	11,46	3,06	11,32	3,09
	15,0	13,04	3,10	12,90	3,14	12,76	3,16	12,69	3,18	12,62	3,19	12,48	3,22
2.0+3.5+3.5	-15,0	6,14	2,50	6,00	2,53	5,86	2,56	5,79	2,57	5,71	2,60	5,57	2,63
	-10,0	7,31	2,64	7,17	2,67	7,03	2,71	6,96	2,72	6,88	2,74	6,74	2,77
	-5,0	8,48	2,78	8,34	2,82	8,20	2,85	8,12	2,86	8,05	2,88	7,91	2,90
	0,0	9,65	2,93	9,51	2,96	9,37	2,99	9,29	3,00	9,22	3,01	9,08	3,05
	6,0	11,06	3,09	10,91	3,12	10,77	3,16	10,70	3,17	10,63	3,19	10,48	3,22
	10,0	11,99	3,21	11,85	3,23	11,71	3,27	11,63	3,29	11,56	3,30	11,42	3,33
	15,0	13,16	3,36	13,02	3,38	12,88	3,41	12,80	3,43	12,73	3,44	12,59	3,48

①	②	Indoor air temperature [°C DB]											
		16°C		18°C		20°C		21°C		22°C		24°C	
		TC	PI	TC	PI	TC	PI	TC	PI	TC	PI	TC	PI
		kW	kW	kW	kW	kW	kW	kW	kW	kW	kW	kW	kW
2.5+2.5+2.5	-15,0	6,17	2,33	6,03	2,37	5,89	2,39	5,82	2,41	5,75	2,42	5,61	2,44
	-10,0	7,30	2,46	7,16	2,49	7,02	2,51	6,95	2,53	6,88	2,54	6,74	2,56
	-5,0	8,43	2,59	8,29	2,61	8,16	2,64	8,09	2,65	8,02	2,66	7,88	2,68
	0,0	9,57	2,71	9,43	2,73	9,29	2,76	9,22	2,77	9,15	2,78	9,01	2,82
	6,0	10,93	2,85	10,79	2,88	10,65	2,90	10,58	2,92	10,51	2,93	10,37	2,96
	10,0	11,83	2,95	11,70	2,97	11,56	3,00	11,49	3,01	11,42	3,03	11,28	3,06
	15,0	12,97	3,07	12,83	3,10	12,69	3,12	12,62	3,14	12,55	3,15	12,41	3,18
2.5+2.5+ 3.5	-15,0	6,31	2,39	6,16	2,42	6,02	2,44	5,95	2,45	5,88	2,48	5,74	2,50
	-10,0	7,46	2,52	7,32	2,54	7,18	2,57	7,11	2,59	7,04	2,61	6,89	2,63
	-5,0	8,61	2,65	8,47	2,67	8,33	2,71	8,26	2,72	8,19	2,74	8,05	2,76
	0,0	9,77	2,78	9,63	2,81	9,49	2,84	9,41	2,85	9,34	2,86	9,20	2,89
	6,0	11,15	2,94	11,01	2,96	10,87	2,99	10,80	3,00	10,73	3,03	10,59	3,05
	10,0	12,08	3,04	11,93	3,07	11,79	3,09	11,72	3,11	11,65	3,12	11,51	3,16
	15,0	13,23	3,17	13,09	3,20	12,95	3,22	12,88	3,25	12,81	3,26	12,67	3,29
2.5+3.5+3.5	-15,0	6,38	2,38	6,23	2,41	6,09	2,43	6,02	2,45	5,95	2,46	5,81	2,50
	-10,0	7,55	2,51	7,40	2,54	7,26	2,56	7,19	2,59	7,12	2,60	6,97	2,63
	-5,0	8,71	2,64	8,57	2,67	8,43	2,70	8,36	2,72	8,29	2,73	8,14	2,76
	0,0	9,88	2,77	9,74	2,81	9,60	2,84	9,53	2,85	9,45	2,86	9,31	2,89
	6,0	11,29	2,94	11,14	2,96	11,00	2,99	10,93	3,00	10,86	3,03	10,71	3,05
	10,0	12,22	3,04	12,08	3,07	11,93	3,10	11,86	3,11	11,79	3,12	11,65	3,16
	15,0	13,39	3,17	13,25	3,20	13,10	3,23	13,03	3,25	12,96	3,26	12,79	3,29
3.5+3.5+3.5	-15,0	6,31	2,43	6,17	2,46	6,02	2,50	5,95	2,51	5,87	2,52	5,73	2,55
	-10,0	7,51	2,57	7,37	2,60	7,22	2,63	7,15	2,64	7,07	2,66	6,93	2,70
	-5,0	8,71	2,71	8,57	2,74	8,42	2,77	8,35	2,78	8,27	2,79	8,13	2,83
	0,0	9,91	2,85	9,77	2,87	9,62	2,90	9,55	2,92	9,47	2,94	9,33	2,96
	6,0	11,35	3,01	11,21	3,04	11,06	3,07	10,99	3,08	10,91	3,10	10,77	3,12
	10,0	12,31	3,12	12,17	3,15	12,02	3,18	11,95	3,19	11,87	3,21	11,73	3,23
	15,0	13,51	3,26	13,37	3,29	13,22	3,31	13,16	3,33	13,07	3,34	12,93	3,38

Symbols:

TC: Total capacity [kW]
PI: Power input [kW]
①: Indoor unit combinations
②: Outdoor temperature [°C WB]

Notes

1. The capacities are based on the following conditions:
   Corresponding refrigerant piping length: ·5· m
   Level difference: ·0·m
2. The bold cells indicate the standard conditions.
3. The values above are for connecting with the following indoor unit types:
   ·2.0, 2.5, 3.5· kW class
   Wall-mounted ·FTXF-A, FTXF-B· series
4. The heating capacity does not include the capacity drop that occurs during a frosting period and defrost operation.

3D126715A

6 Dimensional drawings

6 - 1 Dimensional Drawings

3MXF52A

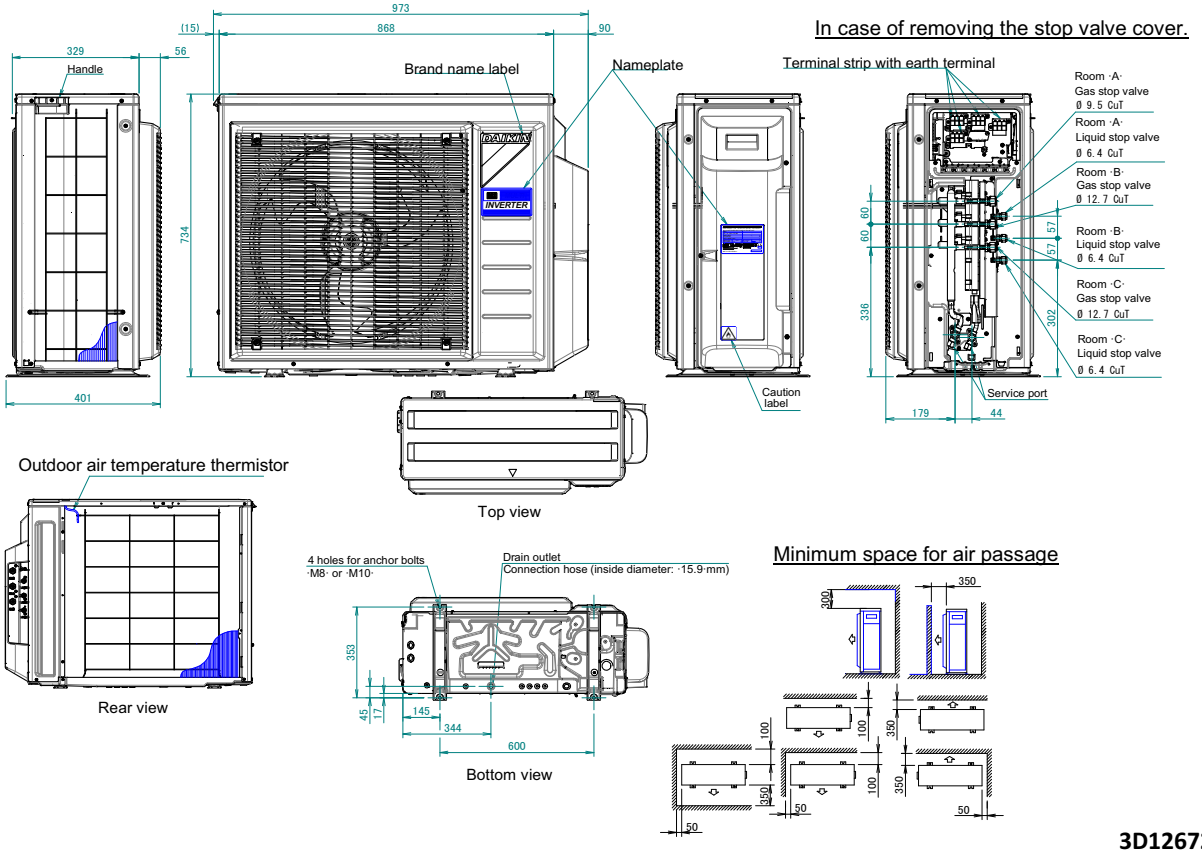

3D126728

3MXF68A

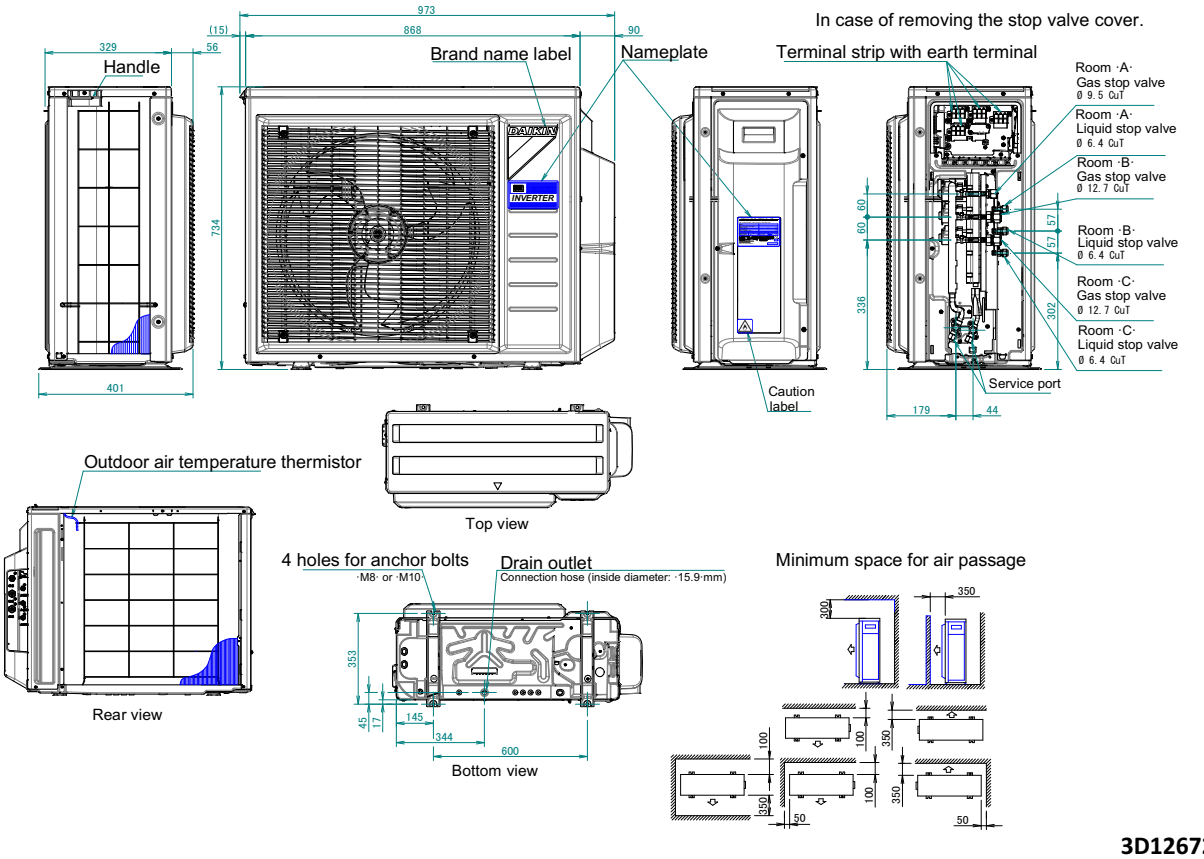

3D126729

7 Centre of gravity

7 - 1 Centre of Gravity

3MXF52A

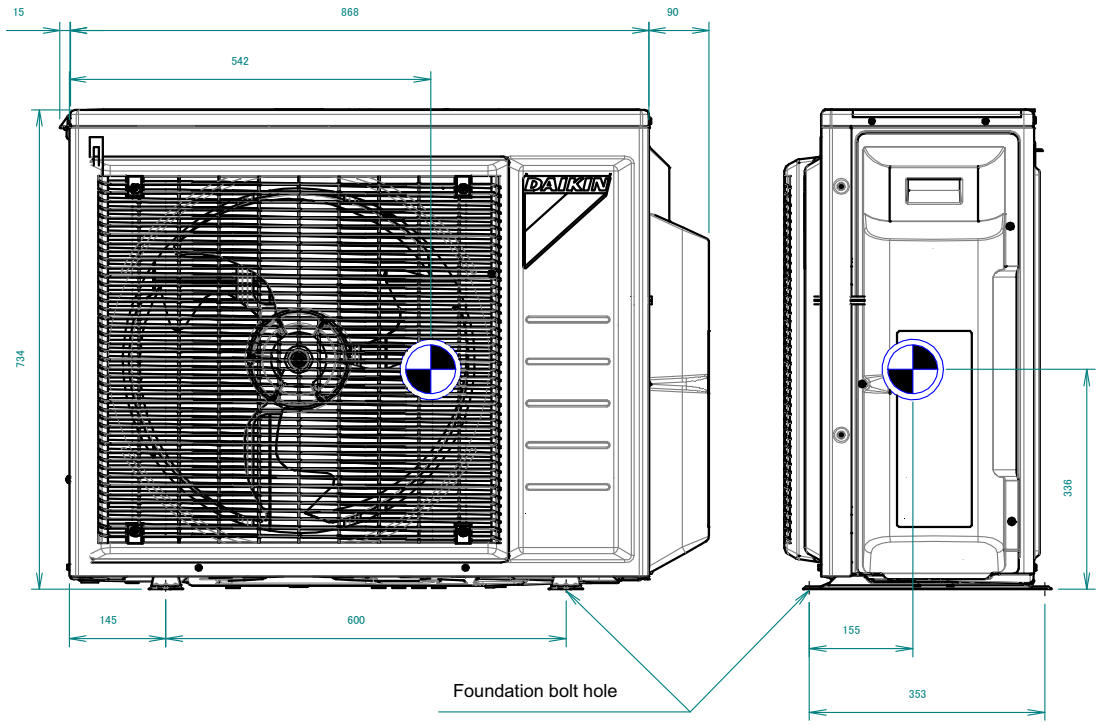

4D126595

3MXF68A

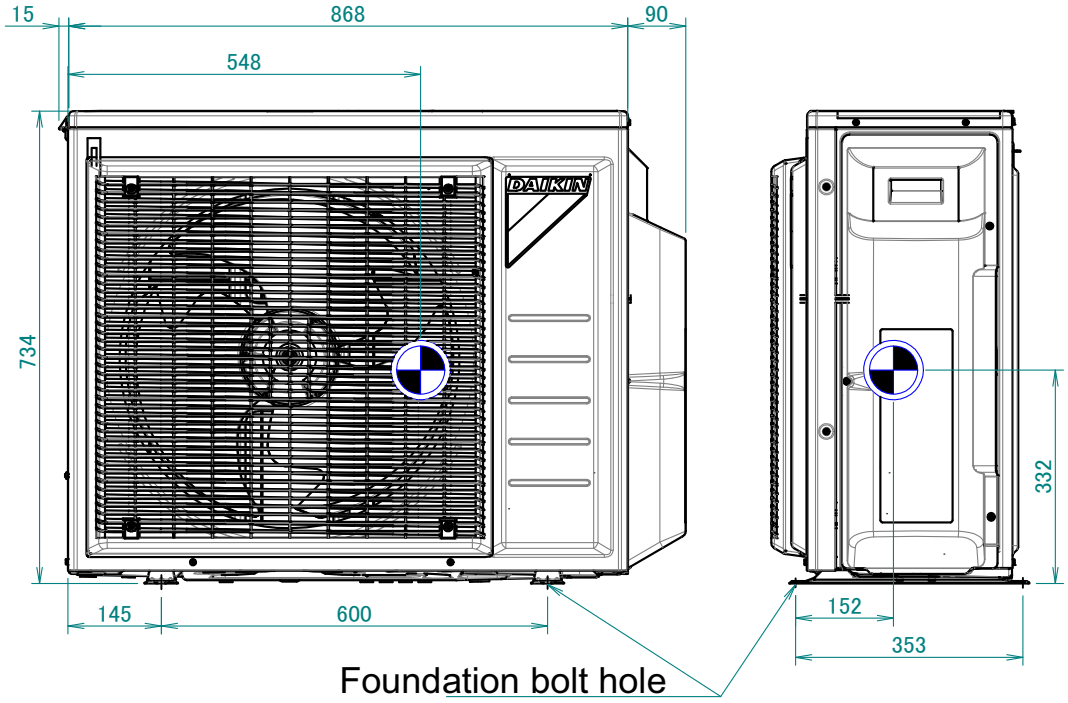

4D126599

8 Piping diagrams

8 - 1 Piping Diagrams

3MXF52A

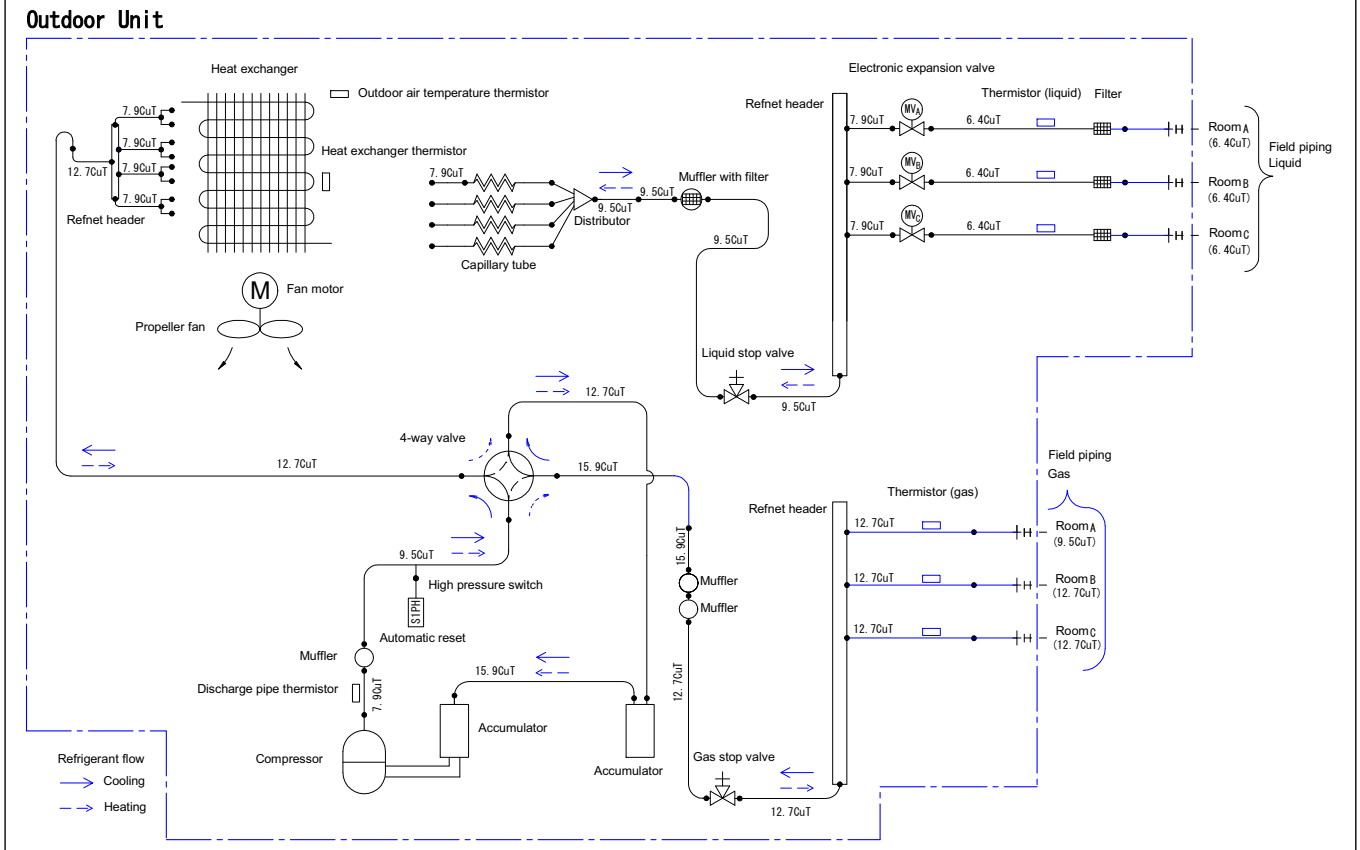

3D097989C

3MXF68A

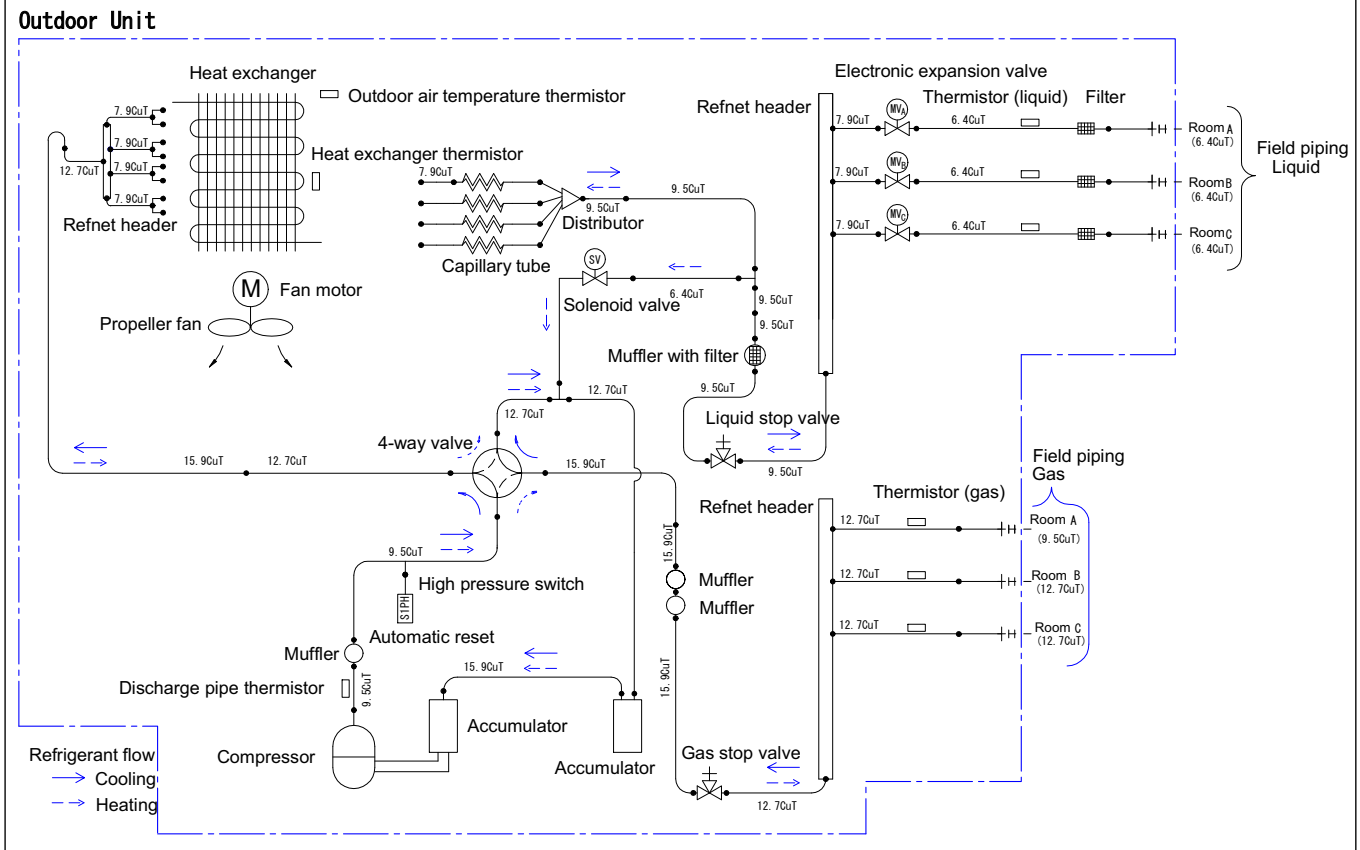

3D100777C

9 Wiring diagrams

9 - 1 Wiring Diagrams - Single Phase

3MXF52A

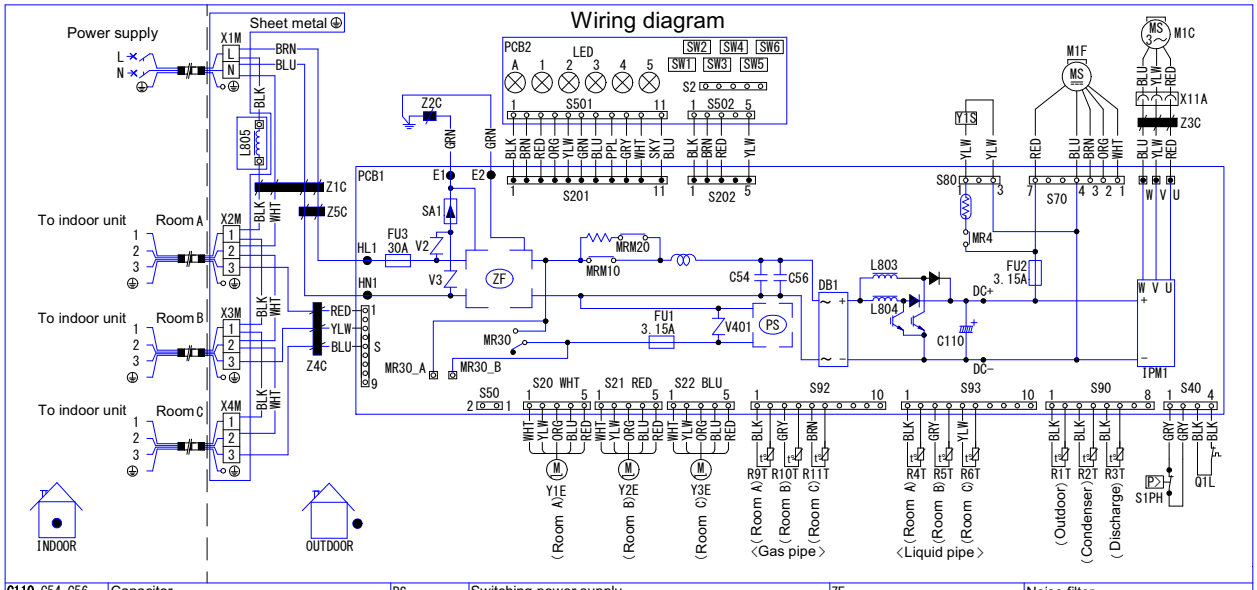

C110, C54, C56	Capacitor	PS	Switching power supply	ZF	Noise filter	
DB1	Diode bridge	Q1L	Overload protector	S, S2-S502	Connector	
FU1, FU2, FU3	Fuse	R1T-R11T	Thermistor	U, V, W	Connector	
IPM1	Intelligent power module	SA1	Surge arrester	X11A, MR30_A, MR30_B	Connector	
L803, L804, L805	Reactor	S1PH	High pressure switch	Field wiring		
LED1-5, LEDA	Light-emitting diode	SW1-SW6	Switch	Screw terminal		
M1C	Compressor motor	V2, V3, V401	Varistor	Connector		
M1F	Fan motor	X1M-X4M	Terminal strip with earth terminal	BLK: black	GRY: grey	SKY BLU: sky blue
MRM10, MRM20	Magnetic relay	Y1E-Y3E	Electronic expansion valve coil	BLU: blue	ORG: orange	WHT: white
MR4, MR30	Magnetic relay	Y1S	Reversing solenoid valve coil	BRN: brown	PPL: purple	YLW: yellow
PCB1, PCB2	Printed circuit board	Z1C-Z5C	Ferrite core	GRN: green	RED: red	3D123866-1A

3D123866A

3MXF68A

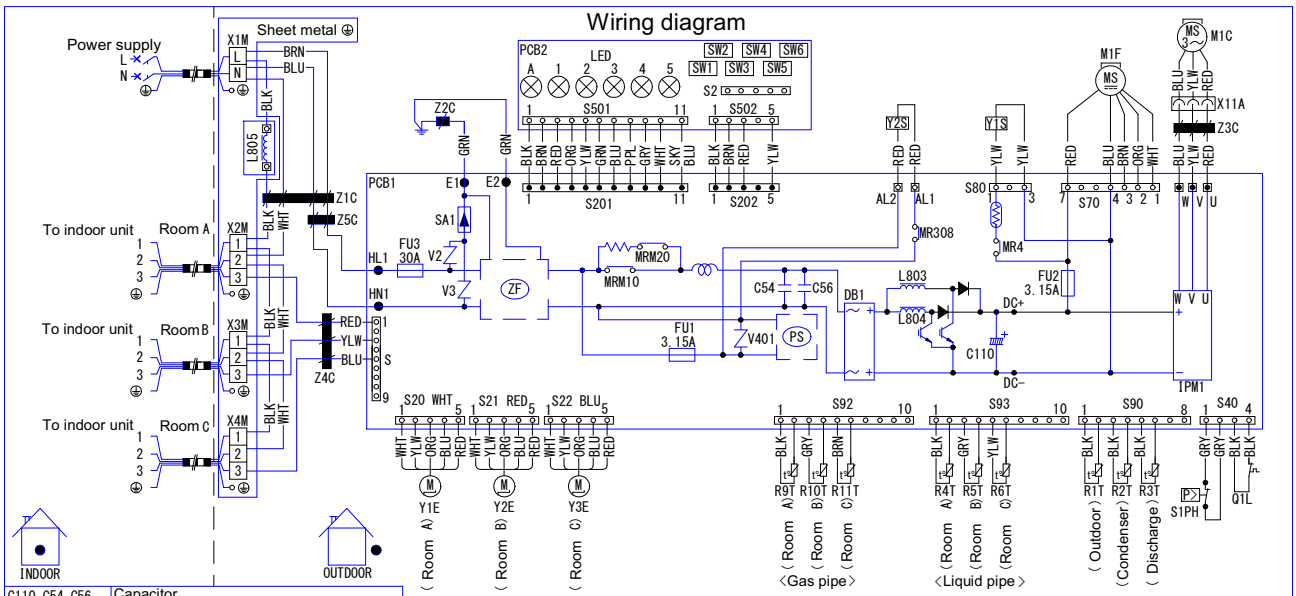

C110, C54, C56	Capacitor					
DB1	Diode bridge	Q1L	Overload protector	ZF	Noise filter	
FU1, FU2, FU3	Fuse	R1T-R11T	Thermistor	S, S2-S502	Connector	
IPM1	Intelligent power module	SA1	Surge arrester	U, V, W	Connector	
L803, L804, L805	Reactor	S1PH	High pressure switch	X11A, AL1, AL2	Connector	
LED1-5, LEDA	Light-emitting diode	SW1-SW6	Switch	Field wiring		
M1C	Compressor motor	V2, V3, V401	Varistor	Screw terminal		
M1F	Fan motor	X1M-X4M	Terminal strip with earth terminal	Connector		
MRM10, MRM20	Magnetic relay	Y1E-Y3E	Electronic expansion valve coil	BLK: black	GRY: grey	SKY BLU: sky blue
MR4, MR308	Magnetic relay	Y1S	Reversing solenoid valve coil	BLU: blue	ORG: orange	WHT: white
PCB1, PCB2	Printed circuit board	Y2S	Solenoid valve	BRN: brown	PPL: purple	YLW: yellow
PS	Switching power supply	Z1C-Z5C	Ferrite core	GRN: green	RED: red	3D123861-1B

3D123861B

10 Sound data

10 - 1 Sound Pressure Spectrum

3MXF52A

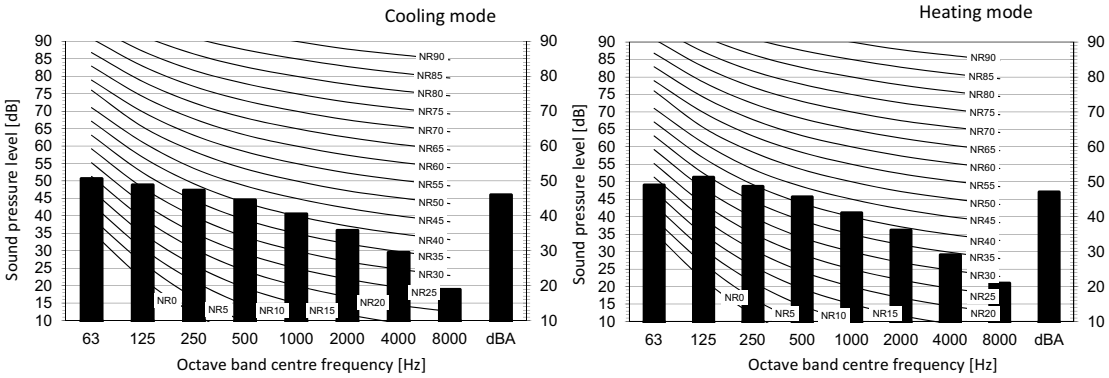

Legend

dBA = A-weighted sound pressure level (A scale according to IEC).

A Scale

B Fan speed: High

Cooling Total dB

A	B
dBA	46

Heating Total dB

A	B
dBA	47

Location of microphone

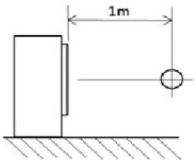

Notes

1. Operating conditions: power source 220-240 V/220 V 50/60 Hz; JIS standard
2. Background noise already taken into account.
3. Operating noise varies depending on operation and ambient conditions.
4. The operation noise measuring method is in accordance with JISC9612.
5. Measuring location: anechoic chamber

3D102459D

3MXF68A

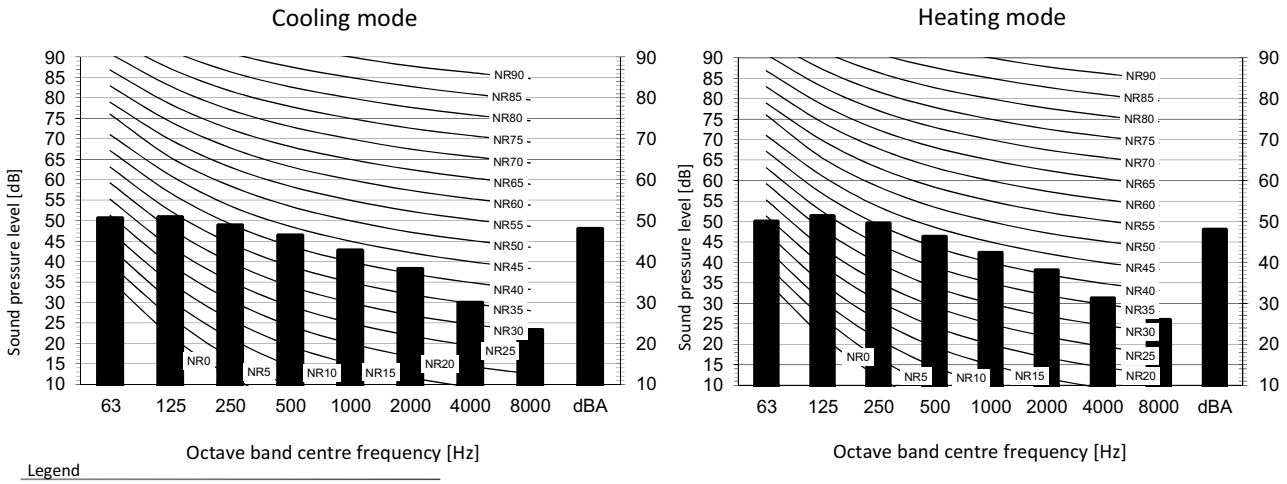

Legend

dBA = A-weighted sound pressure level (A scale according to IEC).

A Scale

B Fan speed: High

Cooling Total dB

A	B
dBA	48

Heating Total dB

A	B
dBA	49

Location of microphone

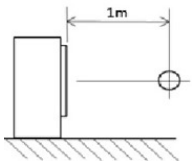

Notes

1. Operating conditions: power source 220-240 V/220 V 50/60 Hz; JIS standard
2. Background noise already taken into account.
3. Operating noise varies depending on operation and ambient conditions.
4. The operation noise measuring method is in accordance with JISC9612.
5. Measuring location: anechoic chamber

3D106223B

11 Operation range

11 - 1 Operation Range

3MXF-A

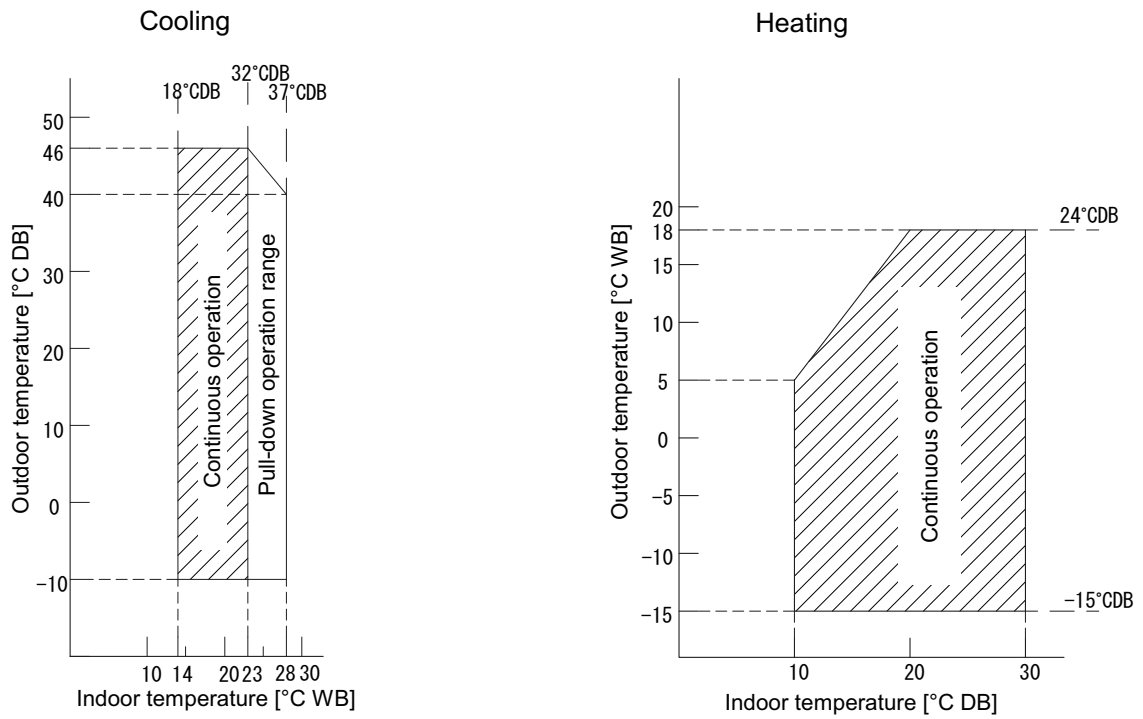

Notes
1. The ·graph· is based on the following conditions.
   Corresponding refrigerant piping length: ·5· m
   Level difference: ·0·m
   Air flow rate High

3D101376D

Daikin Europe N.V. Naamloze Vennootschap - Zandvoordestraat 300, B-8400 Oostende - Belgium - www.daikin.eu - BE 0412 120 336 - RPR Oostende

MIX
Paper from responsible sources
FSC® C109049

EEDEN20A 02/20

Daikin Europe N.V. participates in the Eurovent Certified Performance programme for Liquid Chilling Packages and Hydronic Heat Pumps, Fan Coil Units and Variable Refrigerant Flow systems. Check ongoing validity of certificate: www.eurovent-certification.com

The present leaflet is drawn up by way of information only and does not constitute an offer binding upon Daikin Europe N.V.. Daikin Europe N.V. has compiled the content of this leaflet to the best of its knowledge. No express or implied warranty is given for the completeness, accuracy, reliability or fitness for particular purpose of its content and the products and services presented therein. Specifications are subject to change without prior notice. Daikin Europe N.V. explicitly rejects any liability for any direct or indirect damage, in the broadest sense, arising from or related to the use and/or interpretation of this leaflet. All content is copyrighted by Daikin Europe N.V.