Air Conditioning

Technical Data

EEDEN15-100

RX-K

TABLE OF CONTENTS

RX-K

1 Features 2

2 Specifications 3
Capacity and Power input 3
Capacity and Power input 3
Technical Specifications 4
Electrical Specifications 6

3 Electrical data 7

4 Capacity tables 8
Cooling/Heating Capacity Tables 8

5 Dimensional drawings 16

6 Centre of gravity 17

7 Piping diagrams 19

8 Wiring diagrams 21
Wiring Diagrams - Single Phase 21

9 Sound data 22
Sound Pressure Spectrum 22

10 Operation range 25

1 Features

- SEER / SCOP up to A++
- Energy saving during standby mode: reduces current consumption by about 80% when operating In standby. If no people are detected for more than 20 minutes, the system will automatically switch to the current-saving mode.
- Daikin outdoor units are neat, sturdy and can easily be mounted on a roof or terrace or simply placed against an outside wall
- Outdoor units are fitted with a swing compressor, renowned for its low noise and high energy efficiency
- Outdoor units for pair application

Energy saving during standby mode

2 Specifications

2-1 Capacity and Power input				FTX20J3/RX20K	FTX25J3/RX25K	FTX35J3/RX35K
Indoor unit				FTX20J3	FTX25J3	FTX35J3
Outdoor unit				RX20K	RX25K	RX35K
Cooling capacity	Min.		kW	1.3		
			Btu/h	4,400		
			kcal/h	1,120		
	Nom.		kW	2.0 (1)	2.5 (1)	3.3 (1)
			Btu/h	6,800 (1)	8,500 (1)	11,300 (1)
			kcal/h	1,720 (1)	2,150 (1)	2,840 (1)
	Max.		kW	2.6	3.0	3.8
			Btu/h	8,900	10,200	13,000
			kcal/h	2,240	2,580	3,270
Heating capacity	Min.		kW	1.3		
			Btu/h	4,400		
			kcal/h	1,120	1,120.0	1,120
	Nom.		kW	2.5 (1)	2.8 (1)	3.5 (1)
			Btu/h	8,500 (1)	9,600 (1)	11,900 (1)
			kcal/h	2,150 (1)	2,410 (1)	3,010 (1)
	Max.		kW	3.5	4.0	4.8
			Btu/h	11,900	13,600	16,400
			kcal/h	3,010	3,440	4,130
Power input	Cooling	Min.	kW	0.310		0.290
		Nom.	kW	0.490 (1)	0.700 (1)	1.030 (1)
		Max.	kW	0.720	1.050	1.300
	Heating	Min.	kW	0.250		0.290
		Nom.	kW	0.590 (1)	0.690 (1)	0.930 (1)
		Max.	kW	0.950	1.110	1.290
Seasonal efficiency (according to EN14825)	Cooling	Energy label		A++		
		Pdesign	kW	2.00	2.50	3.30
		SEER		6.11	6.15	
		Annual energy consumption	kWh	115	142	188
	Heating (Average climate)	Energy label		A+		
		Pdesign	kW	2.20	2.40	2.80
		SCOP		4.34	4.16	4.14
		Annual energy consumption	kWh	711	809	947
Piping connections	Liquid	OD	mm	6.35		
	Gas	OD	mm	9.5		
	Drain	OD	mm	18		
	Heat insulation			Both liquid and gas pipes		
Current	Nominal running current (RLA) - 50Hz	Cooling	A	2.4	3.6	5.5
		Heating	A	3.0	3.2	4.7
Nominal efficiency	EER			4.09 (2)	3.55 (2)	3.21 (2)
	COP			4.24 (2)	4.06 (2)	3.76 (2)
	Annual energy consumption		kWh	244	352	514
	Energy label	Cooling		A		
		Heating		A		

Notes

(1) Nominal efficiency: cooling at 35°/27° nominal load, heating at 7°/20° nominal load

(2) EER/COP according to Eurovent 2012, for use outside EU only

2-2 Capacity and Power input	FTX50K/RX50K	FTX60K/RX60K
Indoor unit	FTX50K	FTX60K
Outdoor unit	RX50K	RX60K

2 Specifications

2-2 Capacity and Power input				FTX50K/RX50K	FTX60K/RX60K
Cooling capacity	Min.		kW	1.7	
			Btu/h	5,800	
			kcal/h	1,460	
	Nom.		kW	5.0 (1)	6.0 (1)
			Btu/h	17,100 (1)	20,500 (1)
			kcal/h	4,300 (1)	5,160 (1)
	Max.		kW	6.0	7.0
			Btu/h	20,500	23,900
			kcal/h	5,160	6,020
Heating capacity	Min.		kW	1.7	
			Btu/h	5,800	
			kcal/h	1.46	1,460
	Nom.		kW	6.0 (1)	7.0 (1)
			Btu/h	20,500 (1)	23,900 (1)
			kcal/h	5,160 (1)	6,020 (1)
	Max.		kW	7.7	8.0
			Btu/h	26,300	27,300
			kcal/h	6,620	6,880
Power input	Cooling	Min.	kW	0.295	
		Nom.	kW	1.397 (1)	1.644 (1)
		Max.	kW	1.542	2.255
	Heating	Min.	kW	0.329	0.381
		Nom.	kW	1.579 (1)	1.929 (1)
		Max.	kW	1.565	2.380
Seasonal efficiency (according to EN14825)	Cooling	Energy label		A++	
		Pdesign	kW	5.00	6.00
		SEER		6.59	6.76
		Annual energy consumption	kWh	266	311
	Heating (Average climate)	Energy label		A+	
		Pdesign	kW	4.60	4.80
		SCOP		4.10	
		Annual energy consumption	kWh	1,570	1,640
Piping connections	Liquid	OD	mm	6.35	
	Gas	OD	mm	12.7	
	Drain	OD	mm	16	
	Heat insulation			Both liquid and gas pipes	
Current	Nominal running current (RLA) - 50Hz	Cooling	A	6.35	7.37
		Heating	A	7.16	8.59
Nominal efficiency	EER			3.58 (2)	3.65 (2)
	COP			3.80 (2)	3.63 (2)
	Annual energy consumption		kWh	698	822
	Energy label	Cooling		A	
		Heating		A	

Notes

(1) Nominal efficiency: cooling at 35°/27° nominal load, heating at 7°/20° nominal load

(2) EER/COP according to Eurovent 2012, for use outside EU only

2-3 Technical Specifications		RX20K	RX25K	RX35K	RX50K	RX60K
Capacity control	Method	Inverter controlled				
Casing	Colour	Ivory white				

2 Specifications

2-3 Technical Specifications					RX20K	RX25K	RX35K	RX50K	RX60K
Dimensions	Unit	Height		mm	550			735	
		Width		mm	658			870	
		Depth		mm	275			320	
	Packed unit	Height		mm	616			810	
		Width		mm	790			1,055	
		Depth		mm	360			444	
Weight	Unit			kg	28			44	49
	Packed unit			kg	31			48	53
Packing	Weight			kg	3			4	
Heat exchanger	Length			mm	670		647	943	920
	Rows	Quantity			1		2	1	2
	Fin pitch			mm	1.4				
	Stages	Quantity			24			32	
	Tube type				ø7 Hi-XA			ø7 Hi-XD	
	Fin	Type			Waffle louvered fin				
Compressor	Model				1YC23AUXDC			2YC36PXD	
	Type				Hermetically sealed swing compressor				
	Output			W	750			1,100	
Fan	Type				Propeller fan				
	Air flow rate	Cooling	High	m³/min	29.2		27.6	63.8	62.7
				cfm	1,030		975	2,253	2,214
			Super low	m³/min	-			51.3	-
				cfm	-			1,812	-
		Heating	High	m³/min	26.2		24.5	58.0	57.9
				cfm	927		865	2,048	2,045
			Super low	m³/min	-			51.3	-
				cfm	-			1,812	-
Fan motor	Model				D50Q-28			D90B-37	
	Output			W	50			58	
	Speed	Cooling	High	rpm	840			710	
			Low	rpm	720			630	
			Super low	rpm	-				
		Heating	High	rpm	840			710	780
			Low	rpm	720			630	680
			Super low	rpm	-				
Sound power level	Cooling			dBA	60		62	61	63
	Heating			dBA	61		62		63
Sound pressure level	Cooling	High		dBA	46		48	47	49
	Heating	High		dBA	47		48		49
Operation range	Cooling	Ambient	Min.	°CDB	-10 (1)			-10	
			Max.	°CDB	46				
	Heating	Ambient	Min.	°CWB	-15				
			Max.	°CWB	18				
Refrigerant	Type				R-410A				
	Charge			kg	0.74		1.0	1.13	1.45
				TCO?eq	1.5		2.1	2.4	3.0
	GWP				2,087.5				
Refrigerant oil	Type				FVC50K				
	Charged volume			l	0.375			0.636	

2 Specifications

2-3 Technical Specifications					RX20K	RX25K	RX35K	RX50K	RX60K
Piping connections	Liquid	OD		mm	6.35				
	Gas	OD		mm	9.5			12.7	
	Drain	ID		mm	-				
		OD		mm	18			16	
	Piping length	OU - IU	Max.	m	15			30	
		System	Chargeless	m	10				
	Additional refrigerant charge			kg/m	0.02 (for piping length exceeding 10m)				
	Level difference	IU - OU	Max.	m	12			20	
	Heat insulation				-			Both liquid and gas pipes	

2-4 Electrical Specifications				RX20K	RX25K	RX35K	RX50K	RX60K
Power supply	Name			V1				
	Phase			1~				
	Frequency		Hz	50				
	Voltage		V	220-240				
Current	Nominal running current (RLA)	Cooling	A	-			6.11	7.21
		Heating	A	-			6.90	8.56
	Starting current	Cooling	A	3.0	3.7	5.2	7.00	9.9
		Heating	A	3.0	3.7	5.2	7.00	9.9
Current - 50Hz	Maximum fuse amps (MFA)		A	16			20.0	
Current - 60Hz	Maximum fuse amps (MFA)		A	-				

Notes

(1) Operation range in combination with FTX-J3: min. 10°CDB ~ max. 46°CDB

Contains fluorinated greenhouse gases

SL: The silent fan level of the air flow rate setting

3 Electrical data

3 - 1 Electrical Data

RX-K

Unit combination restrictions		Power supply					COMP		OFM		IFM	
Indoor	Outdoor	A	B	C	MCA	MFA	RHz	RLA	kW	FLA	kW	FLA
FTX20KV1B	RX20K2V1B	50 50 50	220 230 240	MAX. 50Hz 264V MIN. 50Hz 198V	14, 0	16	36	2, 2	33	0, 17	22	0, 20
FTX25KV1B	RX25K2V1B	50 50 50	220 230 240	MAX. 50Hz 264V MIN. 50Hz 198V	14, 0	16	48	3, 2	33	0, 17	22	0, 20
FTX35KV1B	RX35K2V1B	50 50 50	220 230 240	MAX. 50Hz 264V MIN. 50Hz 198V	14, 0	16	70	4, 7	33	0, 17	28	0, 23
FTX50KV1B	RX50KV1B	50 50 50	220 230 240	MAX. 50Hz 264V MIN. 50Hz 198V	18, 3	20, 0	96	14, 5	80	0, 53	46	0, 30
FTX60KV1B	RX60KV1B	50 50 50	220 230 240	MAX. 50Hz 264V MIN. 50Hz 198V	18, 3	20, 0	96	12, 0	58	0, 38	46	0, 30

Notes

1 The RLA is based on the following conditions.
Indoor temperature 27°C DB / 19°C WB
Outdoor temperature 35°C DB
2 Select the wire size according to the MCA.
3 The maximum allowable voltage that is unbalanced between phases is 2%.
4 Use a circuit breaker instead of a fuse.

Symbols

A Hz
B Voltage
C Voltage range
MCA Minimum Circuit Ampere (A)
MFA Maximum Fuse Ampere (A)
RLA Rated load amps [A]
OFM Outdoor fan motor
IFM Indoor fan motor
FLA Full Load Ampere (A)
kW Fan motor rated output [kW]
RHz Rated operating frequency [Hz]

3D095153

RX20-35K

Unit combination restrictions		Power supply					COMP		OFM		IFM	
Indoor	Outdoor	1	2	3	MCA	MFA	RHz	RLA	kW	FLA	kW	FLA
FTX20J3V1B	RX20K2V1B	50 50 50	220 230 240	MAX. 50Hz 264V MIN. 50Hz 198V	13,71	16	36	2,2	0,033	0,17	0,016	0,12
FTX25J3V1B	RX25K2V1B	50 50 50	220 230 240	MAX. 50Hz 264V MIN. 50Hz 198V	13,71	16	48	3,2	0,033	0,17	0,016	0,12
FTX35J3V1B	RX35K2V1B	50 50 50	220 230 240	MAX. 50Hz 264V MIN. 50Hz 198V	13,71	16	70	4,7	0,033	0,17	0,016	0,12

Notes

1 The RLA is based on the following conditions.
Indoor temperature 27°C DB / 19°C WB
Outdoor temperature 35°C DB
2 Select the wire size according to the MCA.
3 The maximum allowable voltage that is unbalanced between phases is 2%.
4 Use a circuit breaker instead of a fuse.

Symbols

1 Hz
2 Voltage
3 Voltage range
MCA Minimum Circuit Ampere (A)
MFA Maximum Fuse Ampere (A)
RLA Rated load amps [A]
OFM Outdoor fan motor
IFM Indoor fan motor
FLA Full Load Ampere (A)
kW Fan motor rated output [kW]
RHz Rated operating frequency [Hz]

3D092100A

4 Capacity tables

4 - 1 Cooling/Heating Capacity Tables

FTX20J3V1B + RX20K2V1B

AFR	9,1
BF	0,24

Cooling 220-240V 50Hz

A	B	C																	
		20			25			30			32			35			40		
		TC	SHC	PI	TC	SHC	PI	TC	SHC	PI	TC	SHC	PI	TC	SHC	PI	TC	SHC	PI
20	14	2,05	1,71	0,42	1,96	1,67	0,46	1,86	1,62	0,50	1,83	1,61	0,52	1,77	1,58	0,54	1,68	1,54	0,58
22	16	2,14	1,68	0,42	2,05	1,64	0,47	1,95	1,60	0,51	1,92	1,59	0,52	1,86	1,56	0,55	1,77	1,52	0,59
25	18	2,23	1,79	0,43	2,14	1,75	0,47	2,05	1,71	0,51	2,01	1,70	0,52	1,95	1,68	0,55	1,86	1,64	0,59
27	19	2,28	1,91	0,43	2,19	1,88	0,47	2,09	1,84	0,51	2,06	1,83	0,53	2,00	1,80	0,49	1,91	1,77	0,59
30	22	2,42	1,85	0,43	2,32	1,82	0,47	2,23	1,79	0,51	2,19	1,78	0,53	2,14	1,76	0,55	2,05	1,73	0,59
32	24	2,51	1,81	0,43	2,42	1,78	0,47	2,32	1,76	0,52	2,29	1,74	0,53	2,23	1,73	0,56	2,14	1,70	0,60

AFR	9,4

Heating 220-240V 50Hz

A	D									
	-10		-5		0		6		10	
	TC	PI	TC	PI	TC	PI	TC	PI	TC	PI
15	1,68	0,50	1,97	0,52	2,25	0,55	2,59	0,58	2,81	0,60
20	1,60	0,51	1,88	0,54	2,16	0,56	2,50	0,59	2,73	0,61
22	1,56	0,52	1,84	0,54	2,13	0,57	2,47	0,60	2,69	0,61
24	1,53	0,52	1,81	0,55	2,09	0,57	2,43	0,60	2,66	0,62
25	1,51	0,53	1,79	0,55	2,07	0,57	2,41	0,60	2,64	0,62
27	1,48	0,53	1,76	0,56	2,04	0,58	2,38	0,61	2,61	0,63

Notes

1. The capacities are based on the following conditions:
   Corresponding refrigerant piping length: 5.0 m
   Level difference: 0m
2. The bold cells indicate the standard conditions.
   Rated operating frequency [Hz]

Symbols

TC: Total capacity [kW]
PI: Power input [kW]
SHC: Sensible heat capacity [kW]
AFR: Air flow rate [m³/min]
BF: Bypass factor

A Indoor air temperature [°C DB]

B Indoor air temperature [°C WB]

C Outdoor air temperature [°C DB]

D Outdoor air temperature [°C WB]

3D091956

4 Capacity tables

4 - 1 Cooling/Heating Capacity Tables

FTX20KV1B + RX20K2V1B

AFR	9,9
BF	0,22

Cooling 220-240V 50Hz

A	B	C																	
		20			25			30			32			35			40		
		TC	SHC	PI	TC	SHC	PI	TC	SHC	PI	TC	SHC	PI	TC	SHC	PI	TC	SHC	PI
20	14	2,05	1,80	0,39	1,96	1,76	0,42	1,86	1,72	0,46	1,83	1,70	0,48	1,77	1,67	0,50	1,68	1,63	0,53
22	16	2,14	1,77	0,39	2,05	1,73	0,43	1,95	1,69	0,46	1,92	1,68	0,48	1,86	1,65	0,50	1,77	1,61	0,54
25	18	2,23	1,89	0,39	2,14	1,86	0,43	2,05	1,82	0,46	2,01	1,81	0,48	1,95	1,78	0,50	1,86	1,75	0,54
27	19	2,28	2,03	0,39	2,19	2,00	0,43	2,09	1,96	0,47	2,06	1,95	0,48	2,00	1,93	0,50	1,91	1,89	0,54
30	22	2,42	1,97	0,39	2,32	1,94	0,43	2,23	1,91	0,47	2,19	1,90	0,48	2,14	1,88	0,51	2,05	1,85	0,54
32	24	2,51	1,93	0,40	2,42	1,91	0,43	2,32	1,88	0,47	2,29	1,87	0,49	2,23	1,85	0,51	2,14	1,82	0,55

AFR	10,9

Heating 220-240V 50Hz

A	D											
	-15		-10		-5		0		6		10	
	TC	PI	TC	PI	TC	PI	TC	PI	TC	PI	TC	PI
15	1,19	0,34	1,43	0,35	1,67	0,37	2,25	0,49	2,59	0,51	2,81	0,53
20	1,12	0,35	1,36	0,36	1,60	0,38	2,16	0,50	2,50	0,52	2,73	0,54
22	1,09	0,35	1,33	0,37	1,57	0,38	2,13	0,50	2,47	0,53	2,69	0,55
24	1,06	0,35	1,30	0,37	1,54	0,39	2,09	0,51	2,43	0,53	2,66	0,55
25	1,04	0,36	1,28	0,37	1,52	0,39	2,07	0,51	2,41	0,54	2,64	0,55
27	1,01	0,36	1,25	0,38	1,49	0,39	2,04	0,51	2,38	0,54	2,61	0,56

Notes

1. The capacities are based on the following conditions:
   Corresponding refrigerant piping length: 5.0 m
   Level difference: 0m
2. The bold cells indicate the standard conditions.
   Rated operating frequency [Hz]

Symbols

TC: Total capacity [kW]
PI: Power input [kW]
SHC: Sensible heat capacity [kW]
AFR: Air flow rate [m³/min]
BF: Bypass factor

A Indoor air temperature [°C DB]

B Indoor air temperature [°C WB]

C Outdoor air temperature [°C DB]

D Outdoor air temperature [°C WB]

3D095239

4 Capacity tables

4 - 1 Cooling/Heating Capacity Tables

FTX25J3V1B + RX25K2V1B

AFR	9,2
BF	0,29

Cooling 220-240V 50Hz

A	B	C																	
		20			25			30			32			35			40		
		TC	SHC	PI	TC	SHC	PI	TC	SHC	PI	TC	SHC	PI	TC	SHC	PI	TC	SHC	PI
20	14	2,15	1,72	0,52	2,15	1,72	0,58	2,15	1,72	0,65	2,15	1,72	0,68	2,15	1,72	0,72	2,10	1,69	0,78
22	16	2,68	1,89	0,56	2,56	1,83	0,62	2,44	1,78	0,67	2,40	1,76	0,69	2,33	1,72	0,73	2,21	1,67	0,78
25	18	2,79	1,98	0,57	2,68	1,93	0,62	2,56	1,88	0,67	2,51	1,86	0,70	2,44	1,83	0,73	2,33	1,78	0,78
27	19	2,85	2,09	0,57	2,73	2,04	0,62	2,62	1,99	0,68	2,57	1,97	0,70	2,50	1,94	0,70	2,38	1,90	0,78
30	22	3,02	2,02	0,57	2,91	1,97	0,63	2,79	1,93	0,68	2,74	1,91	0,70	2,67	1,89	0,73	2,56	1,85	0,79
32	24	3,14	1,96	0,58	3,02	1,92	0,63	2,90	1,89	0,68	2,86	1,87	0,71	2,79	1,85	0,74	2,67	1,81	0,79

AFR	9,7

Heating 220-240V 50Hz

A	D									
	-10		-5		0		6		10	
	TC	PI	TC	PI	TC	PI	TC	PI	TC	PI
15	1,88	0,58	2,20	0,61	2,52	0,64	2,90	0,67	3,15	0,70
20	1,79	0,60	2,10	0,63	2,42	0,66	2,80	0,69	3,05	0,71
22	1,75	0,61	2,07	0,63	2,38	0,66	2,76	0,70	3,01	0,72
24	1,71	0,61	2,03	0,64	2,34	0,67	2,72	0,70	2,98	0,73
25	1,69	0,61	2,01	0,64	2,32	0,67	2,70	0,71	2,96	0,73
27	1,65	0,62	1,97	0,65	2,29	0,68	2,66	0,71	2,92	0,73

Notes

1. The capacities are based on the following conditions:
   Corresponding refrigerant piping length: 5.0 m
   Level difference: 0m
2. The bold cells indicate the standard conditions.
   Rated operating frequency [Hz]

Symbols

TC: Total capacity [kW]
PI: Power input [kW]
SHC: Sensible heat capacity [kW]
AFR: Air flow rate [m³/min]
BF: Bypass factor

A Indoor air temperature [°C DB]

B Indoor air temperature [°C WB]

C Outdoor air temperature [°C DB]

D Outdoor air temperature [°C WB]

3D091957

4 Capacity tables

4 - 1 Cooling/Heating Capacity Tables

FTX25KV1B + RX25K2V1B

AFR	10,4
BF	0,22

Cooling 220-240V 50Hz

A	B	C																	
		20			25			30			32			35			40		
		TC	SHC	PI	TC	SHC	PI	TC	SHC	PI	TC	SHC	PI	TC	SHC	PI	TC	SHC	PI
20	14	2,56	2,08	0,51	2,44	2,03	0,56	2,33	1,97	0,60	2,28	1,95	0,62	2,21	1,92	0,65	2,10	1,86	0,70
22	16	2,68	2,05	0,51	2,56	1,99	0,56	2,44	1,94	0,61	2,40	1,92	0,63	2,33	1,89	0,66	2,21	1,84	0,71
25	18	2,79	2,17	0,51	2,68	2,12	0,56	2,56	2,07	0,61	2,51	2,06	0,63	2,44	2,03	0,66	2,33	1,98	0,71
27	19	2,85	2,31	0,51	2,73	2,27	0,56	2,62	2,22	0,61	2,57	2,20	0,63	2,50	2,18	0,66	2,38	2,13	0,71
30	22	3,02	2,24	0,52	2,91	2,20	0,57	2,79	2,16	0,62	2,74	2,14	0,64	2,67	2,12	0,67	2,56	2,08	0,71
32	24	3,14	2,19	0,52	3,02	2,15	0,57	2,90	2,12	0,62	2,86	2,10	0,64	2,79	2,08	0,67	2,67	2,04	0,72

AFR	11,1

Heating 220-240V 50Hz

A	D											
	-15		-10		-5		0		6		10	
	TC	PI	TC	PI	TC	PI	TC	PI	TC	PI	TC	PI
15	1,43	0,44	1,72	0,47	2,00	0,49	2,70	0,64	3,10	0,67	3,37	0,70
20	1,34	0,46	1,63	0,48	1,92	0,50	2,59	0,65	3,00	0,69	3,27	0,71
22	1,31	0,46	1,59	0,48	1,88	0,51	2,55	0,66	2,96	0,69	3,23	0,72
24	1,27	0,47	1,56	0,49	1,85	0,51	2,51	0,67	2,92	0,70	3,19	0,72
25	1,25	0,47	1,54	0,49	1,83	0,51	2,49	0,67	2,90	0,70	3,17	0,73
27	1,22	0,47	1,51	0,50	1,79	0,52	2,45	0,68	2,86	0,71	3,13	0,73

Notes

1. The capacities are based on the following conditions:
   Corresponding refrigerant piping length: 5.0 m
   Level difference: 0m
2. The bold cells indicate the standard conditions.
   Rated operating frequency [Hz]

Symbols

TC: Total capacity [kW]
PI: Power input [kW]
SHC: Sensible heat capacity [kW]
AFR: Air flow rate [m³/min]
BF: Bypass factor

A Indoor air temperature [°C DB]

B Indoor air temperature [°C WB]

C Outdoor air temperature [°C DB]

D Outdoor air temperature [°C WB]

3D095240

4 Capacity tables

4 - 1 Cooling/Heating Capacity Tables

FTX35J3V1B + RX35K2V1B

AFR	9,3
BF	0,25

Cooling 220-240V 50Hz

A	B	C																	
		20			25			30			32			35			40		
		TC	SHC	PI	TC	SHC	PI	TC	SHC	PI	TC	SHC	PI	TC	SHC	PI	TC	SHC	PI
20	14	2,30	1,83	0,72	2,30	1,83	0,82	2,30	1,83	0,90	2,30	1,83	0,93	2,30	1,83	0,97	2,30	1,83	1,04
22	16	3,07	2,11	0,75	3,07	2,11	0,83	3,07	2,11	0,90	3,07	2,11	0,93	3,07	2,11	0,97	2,92	2,04	1,05
25	18	3,68	2,43	0,76	3,53	2,36	0,83	3,38	2,29	0,91	3,32	2,26	0,93	3,22	2,22	0,98	3,07	2,15	1,05
27	19	3,76	2,54	0,76	3,61	2,48	0,84	3,45	2,41	0,91	3,39	2,38	0,94	3,30	2,34	1,03	3,15	2,27	1,05
30	22	3,99	2,45	0,77	3,84	2,39	0,84	3,68	2,32	0,91	3,62	2,30	0,94	3,53	2,27	0,99	3,37	2,21	1,06
32	24	4,14	2,38	0,77	3,99	2,32	0,85	3,83	2,26	0,92	3,77	2,24	0,95	3,68	2,21	0,99	3,53	2,16	1,06

AFR	10,1

Heating 220-240V 50Hz

A	D									
	-10		-5		0		6		10	
	TC	PI	TC	PI	TC	PI	TC	PI	TC	PI
15	2,36	0,79	2,75	0,82	3,15	0,86	3,62	0,91	3,94	0,94
20	2,24	0,81	2,63	0,85	3,03	0,88	3,50	0,93	3,82	0,96
22	2,19	0,82	2,58	0,85	2,98	0,89	3,45	0,94	3,77	0,97
24	2,14	0,82	2,53	0,86	2,93	0,90	3,40	0,95	3,72	0,98
25	2,11	0,83	2,51	0,87	2,90	0,90	3,38	0,95	3,70	0,98
27	2,07	0,84	2,46	0,88	2,86	0,91	3,33	0,96	3,65	0,99

Notes

1. The capacities are based on the following conditions:
   Corresponding refrigerant piping length: 5.0 m
   Level difference: 0m
2. The bold cells indicate the standard conditions.
   Rated operating frequency [Hz]

Symbols

TC: Total capacity [kW]
PI: Power input [kW]
SHC: Sensible heat capacity [kW]
AFR: Air flow rate [m³/min]
BF: Bypass factor

A Indoor air temperature [°C DB]

B Indoor air temperature [°C WB]

C Outdoor air temperature [°C DB]

D Outdoor air temperature [°C WB]

3D091958

4 Capacity tables

4 - 1 Cooling/Heating Capacity Tables

FTX35KV1B + RX35K2V1B

AFR	11,8
BF	0,23

Cooling 220-240V 50Hz

A	B	C																	
		20			25			30			32			35			40		
		TC	SHC	PI	TC	SHC	PI	TC	SHC	PI	TC	SHC	PI	TC	SHC	PI	TC	SHC	PI
20	14	3,59	2,69	0,78	3,42	2,61	0,86	3,26	2,53	0,93	3,19	2,50	0,96	3,10	2,45	1,01	2,93	2,37	1,08
22	16	3,75	2,65	0,79	3,58	2,57	0,86	3,42	2,49	0,94	3,36	2,47	0,97	3,26	2,42	1,01	3,10	2,35	1,09
25	18	3,91	2,78	0,79	3,75	2,71	0,87	3,58	2,64	0,94	3,52	2,61	0,97	3,42	2,57	1,02	3,26	2,50	1,09
27	19	3,99	2,93	0,79	3,83	2,86	0,87	3,66	2,80	0,94	3,60	2,77	0,97	3,50	2,73	1,02	3,34	2,67	1,10
30	22	4,23	2,83	0,80	4,07	2,77	0,88	3,90	2,71	0,95	3,84	2,69	0,98	3,74	2,65	1,03	3,58	2,59	1,10
32	24	4,39	2,76	0,81	4,23	2,70	0,88	4,07	2,65	0,96	4,00	2,63	0,99	3,90	2,59	1,03	3,74	2,54	1,11

AFR	12,8

Heating 220-240V 50Hz

A	D											
	-15		-10		-5		0		6		10	
	TC	PI	TC	PI	TC	PI	TC	PI	TC	PI	TC	PI
15	1,90	0,64	2,29	0,67	2,67	0,71	3,60	0,92	4,14	0,97	4,50	1,01
20	1,79	0,66	2,17	0,69	2,56	0,72	3,46	0,95	4,00	1,00	4,36	1,03
22	1,74	0,67	2,12	0,70	2,51	0,73	3,40	0,95	3,94	1,00	4,31	1,04
24	1,69	0,67	2,08	0,71	2,46	0,74	3,35	0,96	3,89	1,01	4,25	1,05
25	1,67	0,68	2,05	0,71	2,44	0,74	3,32	0,97	3,86	1,02	4,22	1,05
27	1,62	0,68	2,01	0,72	2,39	0,75	3,26	0,98	3,81	1,03	4,17	1,06

Notes

1. The capacities are based on the following conditions:
   Corresponding refrigerant piping length: 5.0 m
   Level difference: 0m
2. The bold cells indicate the standard conditions.
   Rated operating frequency [Hz]

Symbols

TC: Total capacity [kW]
PI: Power input [kW]
SHC: Sensible heat capacity [kW]
AFR: Air flow rate [m³/min]
BF: Bypass factor

A Indoor air temperature [°C DB]

B Indoor air temperature [°C WB]

C Outdoor air temperature [°C DB]

D Outdoor air temperature [°C WB]

3D095241

4 Capacity tables

4 - 1 Cooling/Heating Capacity Tables

FTX50KV1B + RX50KV1B

AFR	16,0
BF	0,27

Cooling 220-240V 50Hz

A	B	C																	
		20			25			30			32			35			40		
		TC	SHC	PI	TC	SHC	PI	TC	SHC	PI	TC	SHC	PI	TC	SHC	PI	TC	SHC	PI
20	14	5,12	3,71	1,07	4,89	3,59	1,18	4,66	3,47	1,28	4,56	3,42	1,32	4,42	3,35	1,38	4,19	3,24	1,48
22	16	5,35	3,64	1,08	5,12	3,53	1,18	4,89	3,42	1,28	4,79	3,38	1,33	4,65	3,31	1,39	4,42	3,20	1,49
25	18	5,58	3,80	1,08	5,35	3,70	1,19	5,12	3,59	1,29	5,02	3,55	1,33	4,88	3,49	1,39	4,65	3,39	1,50
27	19	5,70	3,99	1,09	5,47	3,89	1,19	5,23	3,79	1,29	5,14	3,75	1,34	5,00	3,70	1,40	4,77	3,60	1,50
30	22	6,04	3,85	1,10	5,81	3,76	1,20	5,58	3,67	1,30	5,49	3,63	1,34	5,35	3,58	1,41	5,11	3,50	1,51
32	24	6,27	3,74	1,10	6,04	3,66	1,21	5,81	3,58	1,31	5,72	3,55	1,35	5,58	3,50	1,41	5,34	3,42	1,52

AFR	16,7

Heating 220-240V 50Hz

A	D											
	-15		-10		-5		0		6		10	
	TC	PI	TC	PI	TC	PI	TC	PI	TC	PI	TC	PI
15	2,86	1,02	3,43	1,07	4,01	1,12	5,39	1,47	6,21	1,54	6,75	1,60
20	2,68	1,04	3,26	1,10	3,83	1,15	5,19	1,50	6,00	1,58	6,54	1,63
22	2,61	1,06	3,19	1,11	3,76	1,16	5,10	1,52	5,92	1,59	6,46	1,65
24	2,54	1,07	3,12	1,12	3,69	1,17	5,02	1,53	5,83	1,61	6,38	1,66
25	2,51	1,07	3,08	1,13	3,66	1,18	4,98	1,54	5,79	1,61	6,33	1,67
27	2,43	1,08	3,01	1,14	3,59	1,19	4,90	1,55	5,71	1,63	6,25	1,68

Notes

1. The capacities are based on the following conditions:
   Corresponding refrigerant piping length: 5.0 m
   Level difference: 0m
2. The bold cells indicate the standard conditions.
   Rated operating frequency [Hz]

Symbols

TC: Total capacity [kW]
PI: Power input [kW]
SHC: Sensible heat capacity [kW]
AFR: Air flow rate [m³/min]
BF: Bypass factor

A Indoor air temperature [°C DB]

B Indoor air temperature [°C WB]

C Outdoor air temperature [°C DB]

D Outdoor air temperature [°C WB]

3D095242

4 Capacity tables

4 - 1 Cooling/Heating Capacity Tables

FTX60KV1B + RX60KV1B

AFR	17,6
BF	0,27

Cooling 220-240V 50Hz

A	B	C																	
		20			25			30			32			35			40		
		TC	SHC	PI	TC	SHC	PI	TC	SHC	PI	TC	SHC	PI	TC	SHC	PI	TC	SHC	PI
20	14	6,15	4,35	1,26	5,87	4,20	1,38	5,59	4,05	1,50	5,48	4,00	1,55	5,31	3,91	1,63	5,03	3,77	1,75
22	16	6,42	4,27	1,27	6,14	4,13	1,39	5,86	4,00	1,51	5,75	3,94	1,56	5,59	3,86	1,63	5,31	3,73	1,75
25	18	6,70	4,44	1,28	6,42	4,31	1,40	6,14	4,18	1,52	6,03	4,13	1,57	5,86	4,05	1,64	5,58	3,93	1,76
27	19	6,84	4,65	1,28	6,56	4,52	1,40	6,28	4,40	1,52	6,17	4,35	1,57	6,00	4,28	1,64	5,72	4,16	1,77
30	22	7,25	4,47	1,29	6,97	4,36	1,41	6,69	4,25	1,53	6,58	4,21	1,58	6,41	4,14	1,65	6,14	4,04	1,78
32	24	7,53	4,34	1,30	7,25	4,24	1,42	6,97	4,14	1,54	6,86	4,10	1,59	6,69	4,04	1,66	6,41	3,94	1,78

AFR	18,9

Heating 220-240V 50Hz

A	D											
	-15		-10		-5		0		6		10	
	TC	PI	TC	PI	TC	PI	TC	PI	TC	PI	TC	PI
15	3,33	1,24	4,01	1,31	4,68	1,37	6,29	1,79	7,24	1,89	7,87	1,95
20	3,13	1,28	3,80	1,34	4,47	1,40	6,05	1,83	7,00	1,93	7,63	1,99
22	3,05	1,29	3,72	1,35	4,39	1,42	5,95	1,85	6,90	1,95	7,54	2,01
24	2,96	1,30	3,64	1,37	4,31	1,43	5,86	1,87	6,81	1,96	7,44	2,03
25	2,92	1,31	3,59	1,37	4,27	1,44	5,81	1,88	6,76	1,97	7,39	2,04
27	2,84	1,32	3,51	1,39	4,18	1,45	5,71	1,89	6,66	1,99	7,29	2,05

Notes

1. The capacities are based on the following conditions:
   Corresponding refrigerant piping length: 5.0 m
   Level difference: 0m
2. The bold cells indicate the standard conditions.
   Rated operating frequency [Hz]

Symbols

TC: Total capacity [kW]
PI: Power input [kW]
SHC: Sensible heat capacity [kW]
AFR: Air flow rate [m³/min]
BF: Bypass factor

A Indoor air temperature [°C DB]

B Indoor air temperature [°C WB]

C Outdoor air temperature [°C DB]

D Outdoor air temperature [°C WB]

3D095243

5 Dimensional drawings

5 - 1 Dimensional Drawings

RX20-35K

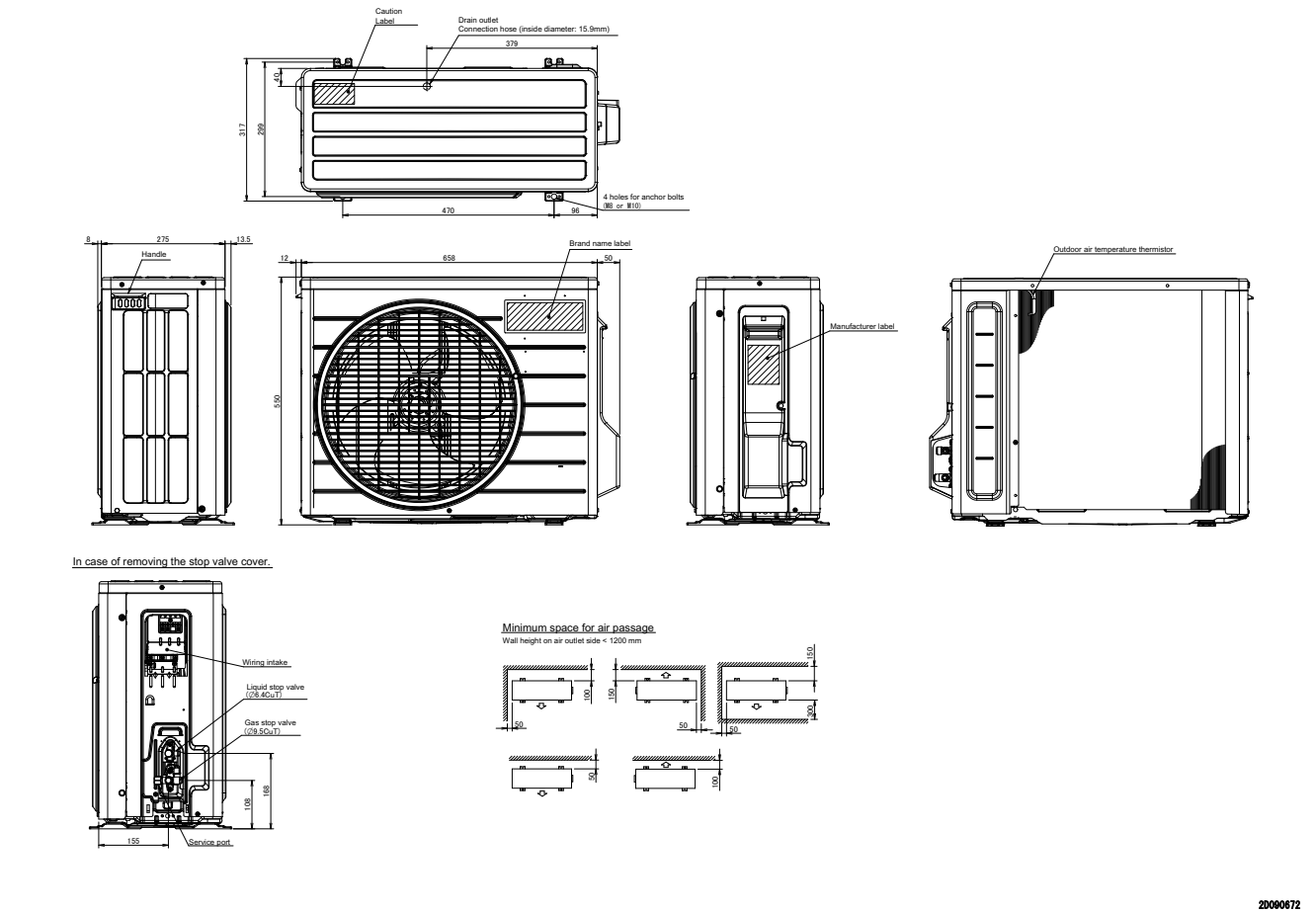

RX50-60K

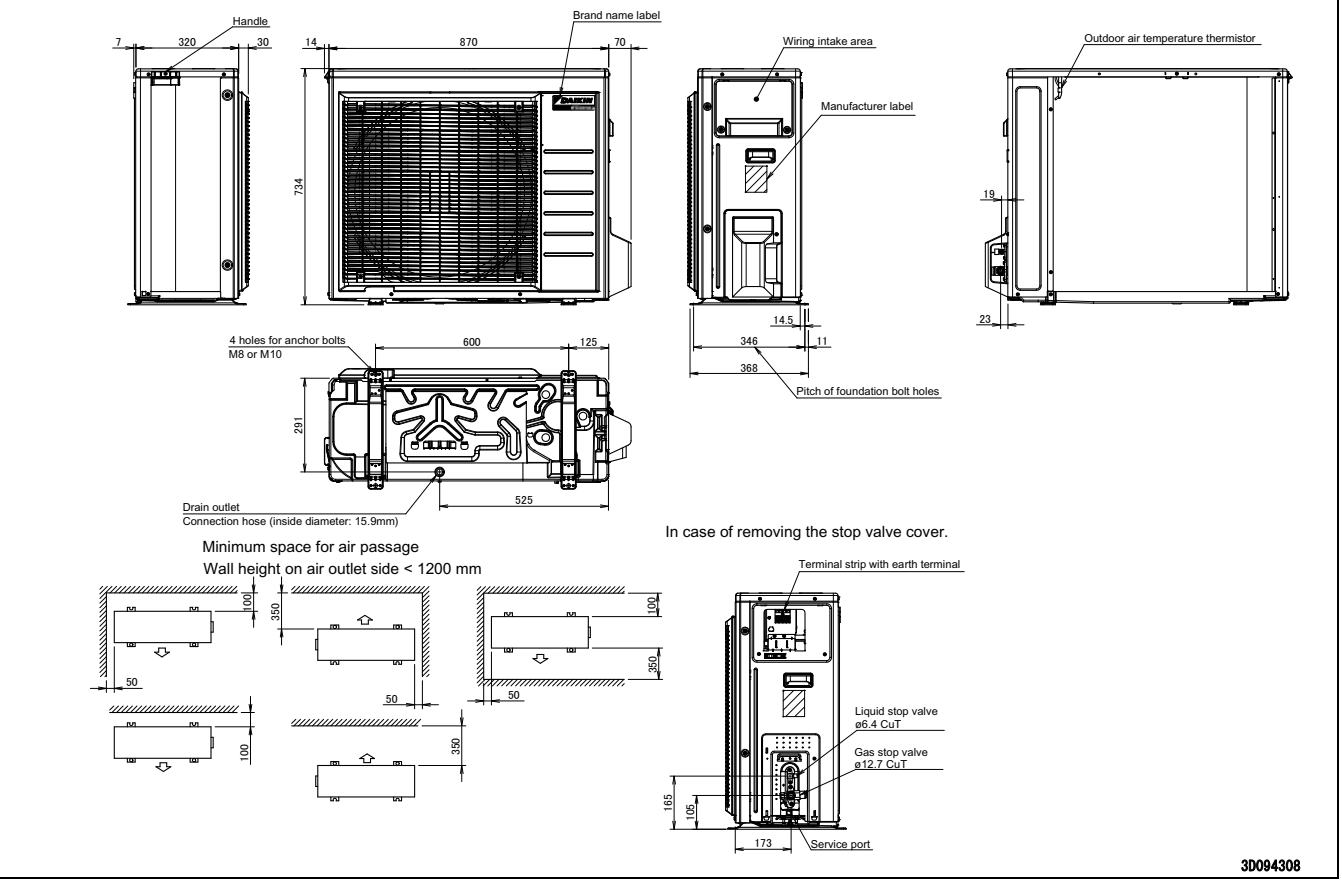

6 Centre of gravity

6 - 1 Centre of Gravity

RX20-25K

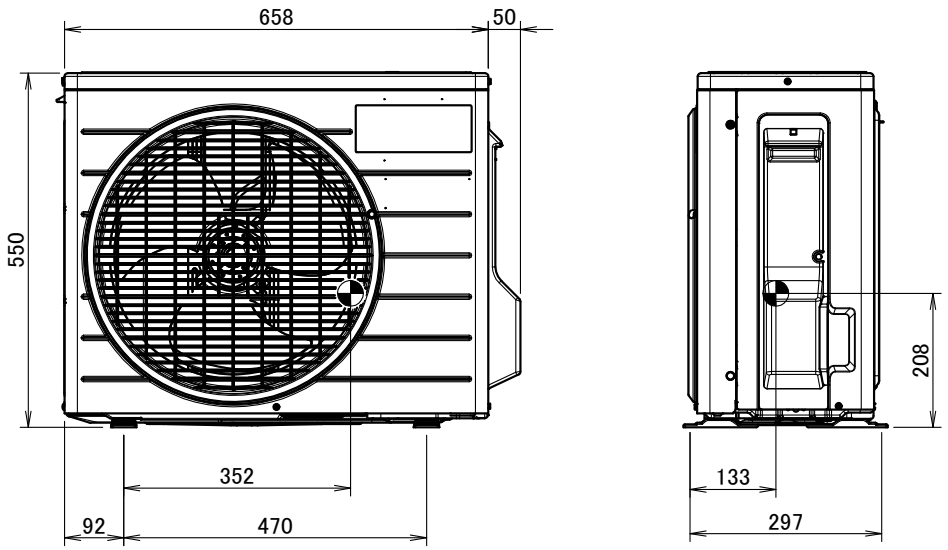

4D092001

RX35K

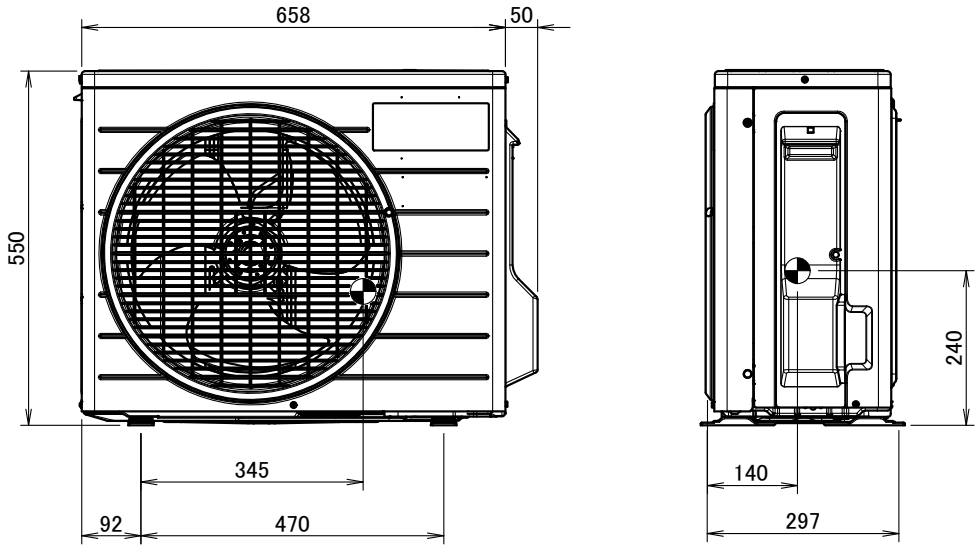

4D092003

6 Centre of gravity

6 - 1 Centre of Gravity

RX50-60K

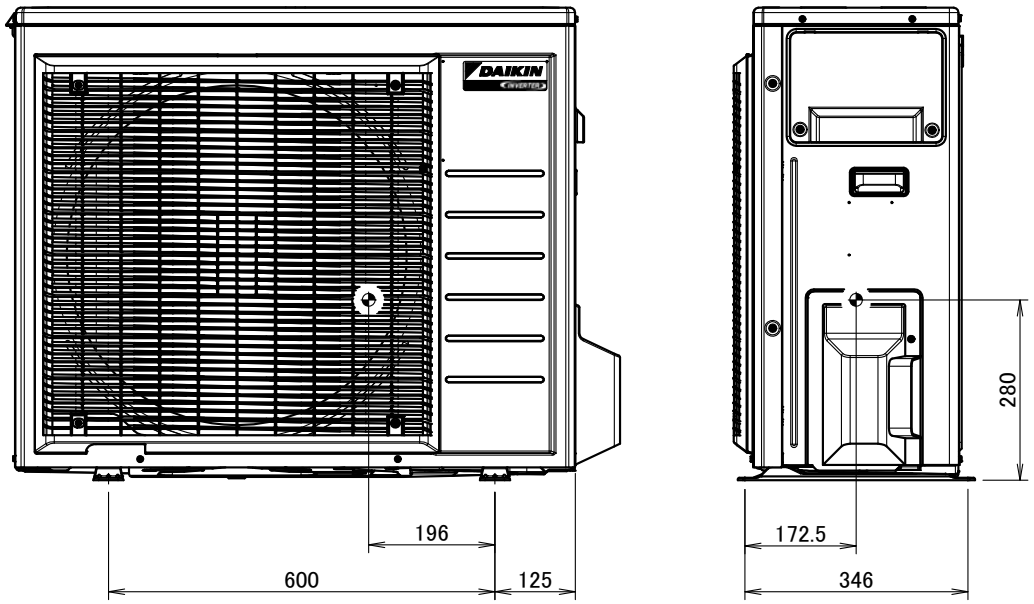

4D094436

7 Piping diagrams

7 - 1 Piping Diagrams

RX20-25K

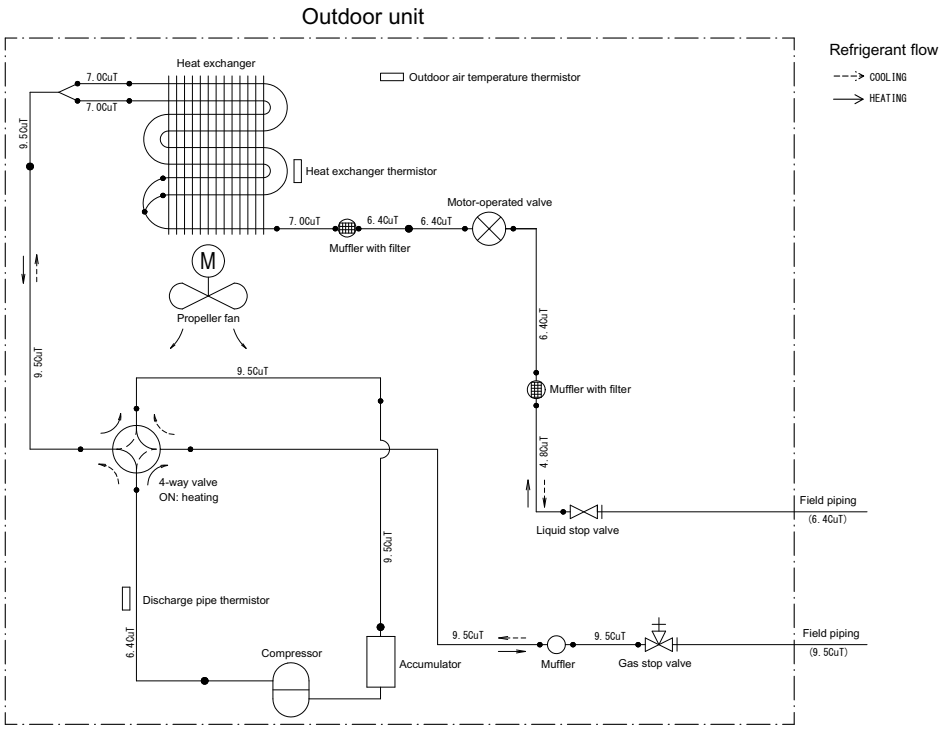

3D090673

RX35K

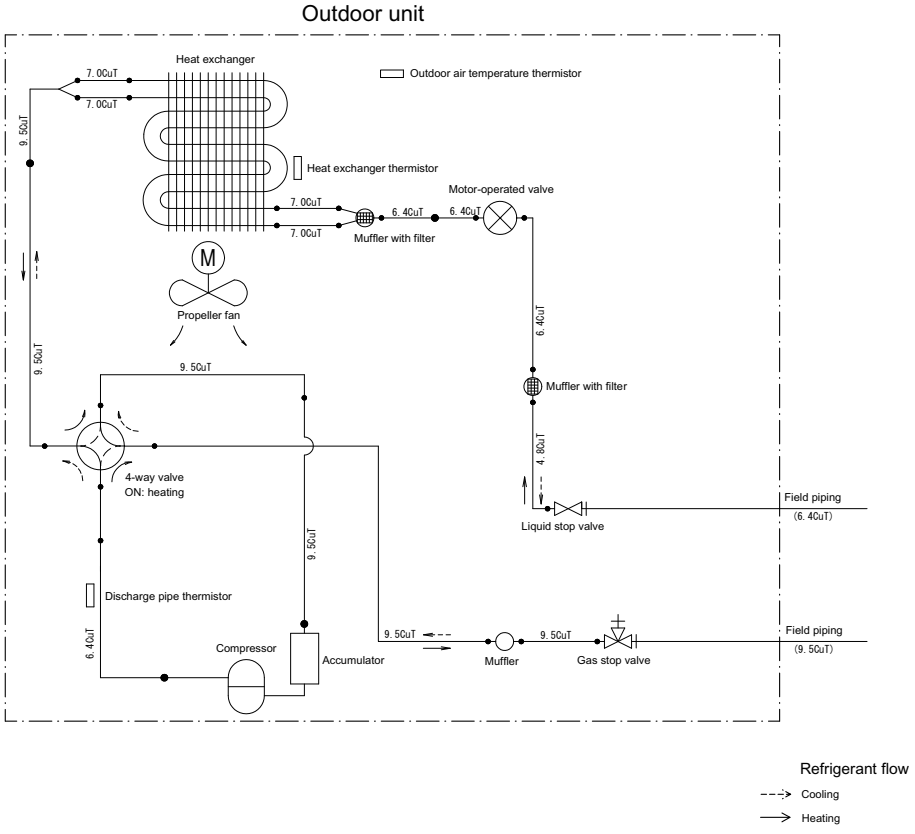

3D090674

7 Piping diagrams

7 - 1 Piping Diagrams

RX50K

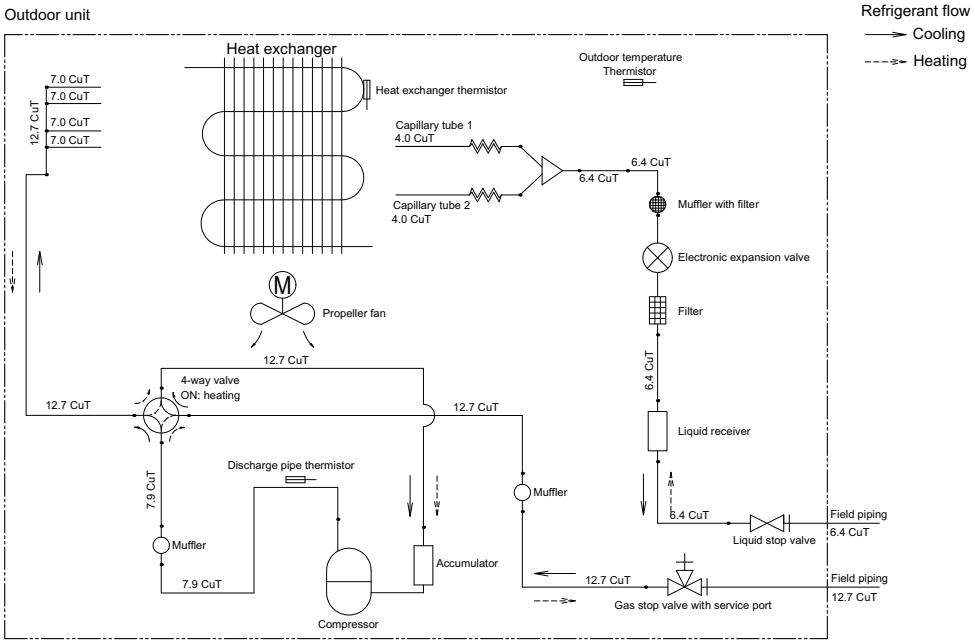

3D094281

RX60K

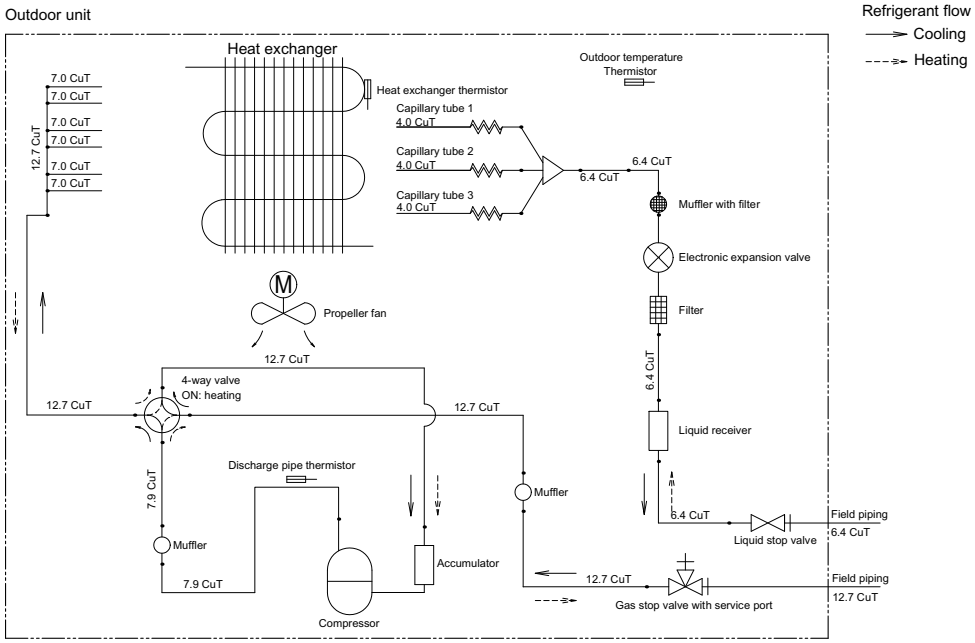

3D094282

8 Wiring diagrams

8 - 1 Wiring Diagrams - Single Phase

RX20-35K

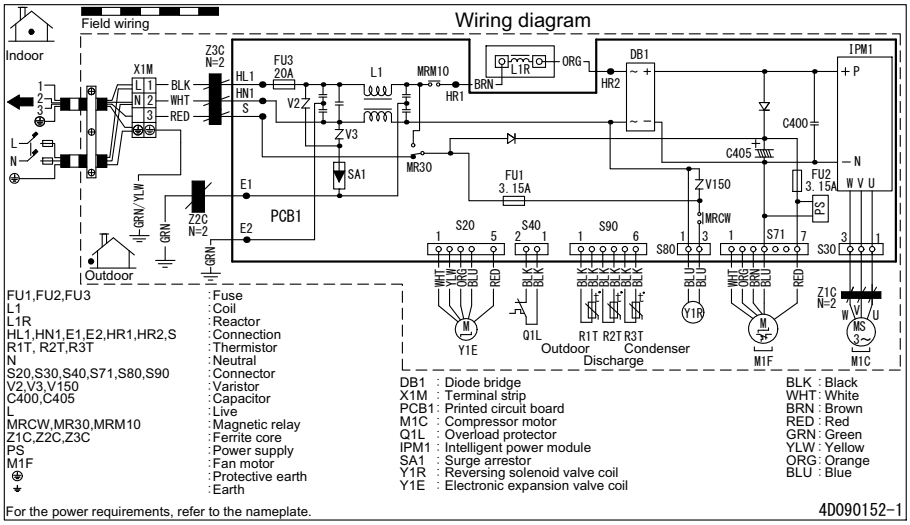

Notes

1. Size: length 80 X width 140.
2. Refer to purchasing specification AS303002, unless otherwise specified.

4D090152

RX50-60K

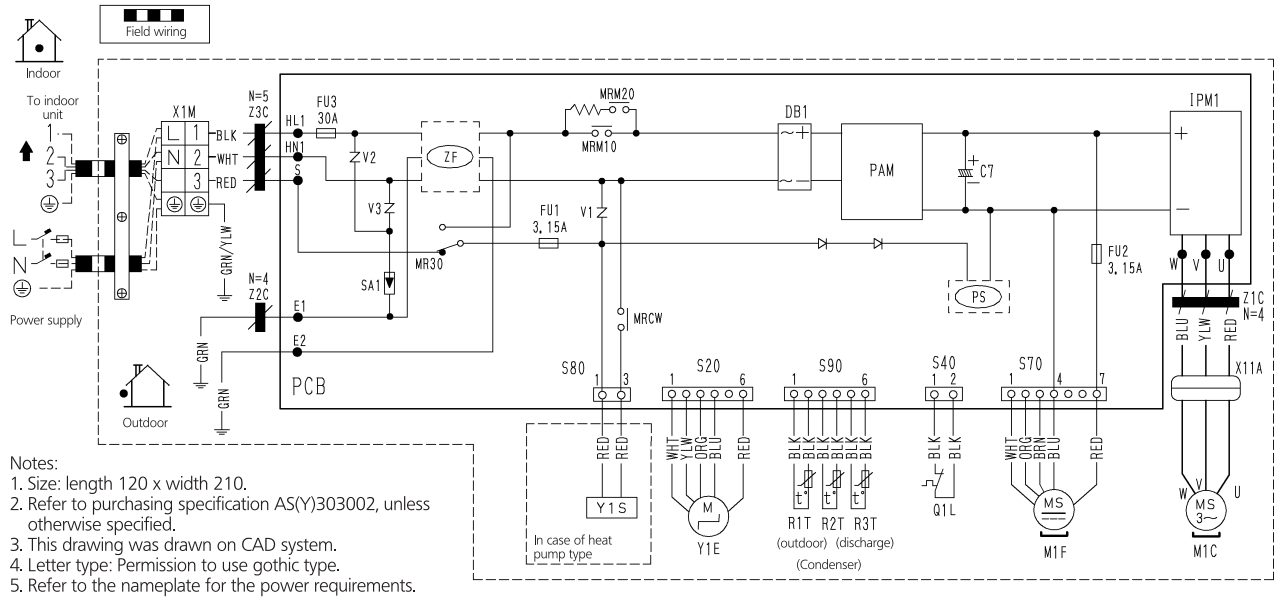

Notes:
1. Size: length 120 x width 210.
2. Refer to purchasing specification AS(Y)303002, unless otherwise specified.
3. This drawing was drawn on CAD system.
4. Letter type: Permission to use gothic type.
5. Refer to the nameplate for the power requirements.

C7	: Capacitor			SA1	: Surge absorber
DB1	: Diode bridge			V1,V2,V3	: Varistor
FU1,FU2,FU3	: Fuse			X1M	: Terminal block
IPM1	: Intelligent power module	PAM	: Pulse amplitude modulation	Y1E	: Electronic expansion valve coil
L	: Live	PCB	: Printed circuit board	Y1S	: Reversing solenoide valve coil
N	: Neutral	PS	: Switching power supply	Z1C,Z2C,Z3C	: Ferrite core
M1C	: Compressor motor	Q1L	: Overload protector	ZF	: Noise filter
M1F	: Fan motor	R1T,R2T,R3T	: Thermistor		: Protective earth
MRM10,MRM20,		S20,S40,S70			: Earth
MR30,MRCW	: Magnetic relay	S80,S90,X11A	: Connector		

3D093353

9 Sound data

9 - 1 Sound Pressure Spectrum

RX20K

Cooling mode

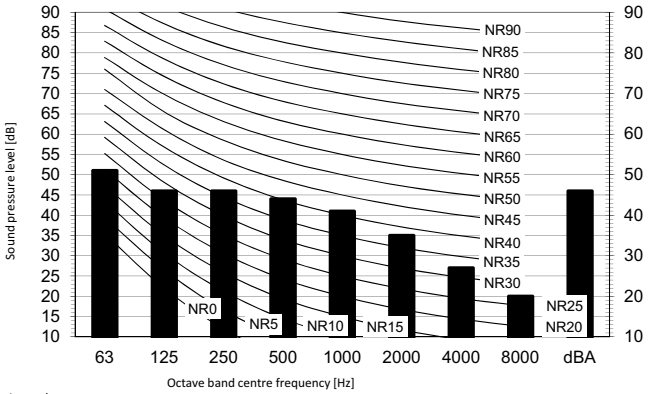

Heating mode

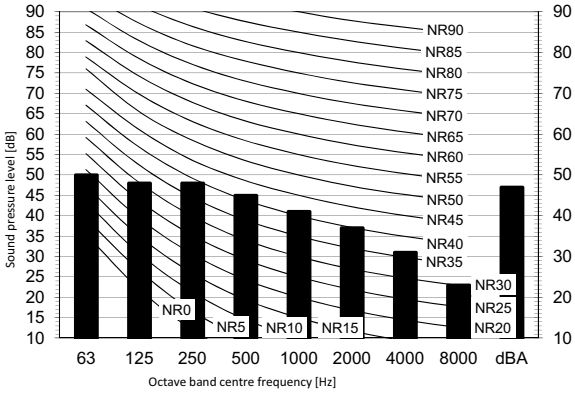

Legend

dBA = A-weighted sound pressure level (A scale according to IEC).

A Scale

B High-tap

Low-tap

Location of microphone

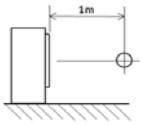

Cooling	Total dB
A	B
dBA	46

Heating	Total dB
A	B
dBA	47

Notes

1. Operating conditions: power source 220-240 V/220 V 50/60 Hz; JIS standard
2. Background noise already taken into account.
3. Operating noise varies depending on operation and ambient conditions.
4. The operation noise measuring method is in accordance with JISC9612.
5. Measuring location: anechoic chamber

3D092072A

RX25K

Cooling mode

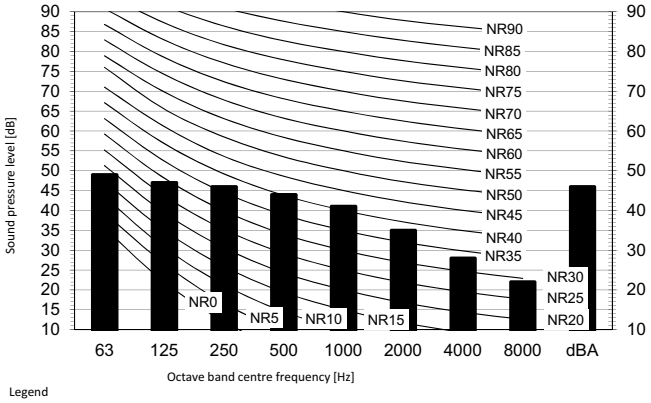

Heating mode

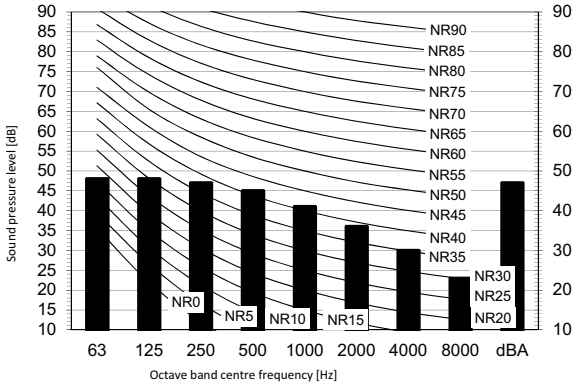

Legend

dBA = A-weighted sound pressure level (A scale according to IEC).

A Scale

B High-tap

Low-tap

Location of microphone

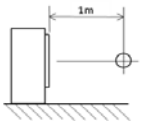

Cooling	Total dB
A	B
dBA	46

Heating	Total dB
A	B
dBA	47

Notes

1. Operating conditions: power source 220-240 V/220 V 50/60 Hz; JIS standard
2. Background noise already taken into account.
3. Operating noise varies depending on operation and ambient conditions.
4. The operation noise measuring method is in accordance with JISC9612.
5. Measuring location: anechoic chamber

3D092073A

9 Sound data

9 - 1 Sound Pressure Spectrum

RX35K

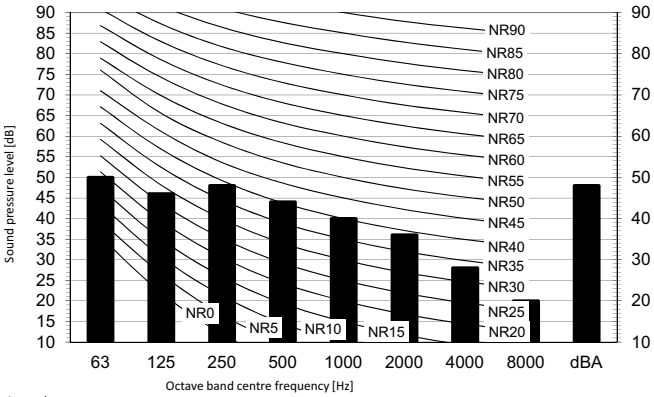

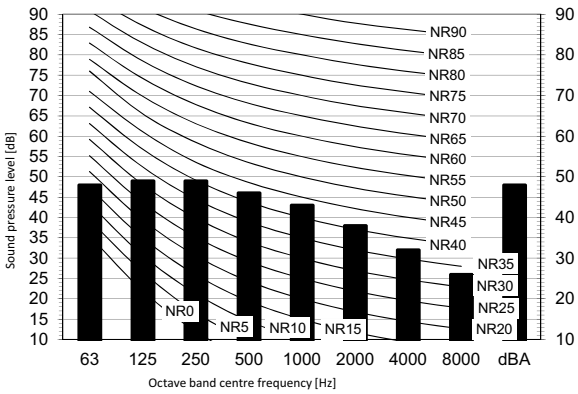

Legend

dBA = A-weighted sound pressure level (A scale according to IEC).

A Scale

B High-tap

Low-tap

Location of microphone

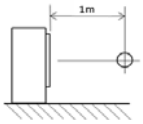

Cooling	Total dB
A	B
dBA	48

Heating	Total dB
A	B
dBA	48

Notes

1. Operating conditions: power source 220-240 V/220 V 50/60 Hz; JIS standard
2. Background noise already taken into account.
3. Operating noise varies depending on operation and ambient conditions.
4. The operation noise measuring method is in accordance with JISC9612.
5. Measuring location: anechoic chamber

3D092074A

RX50K

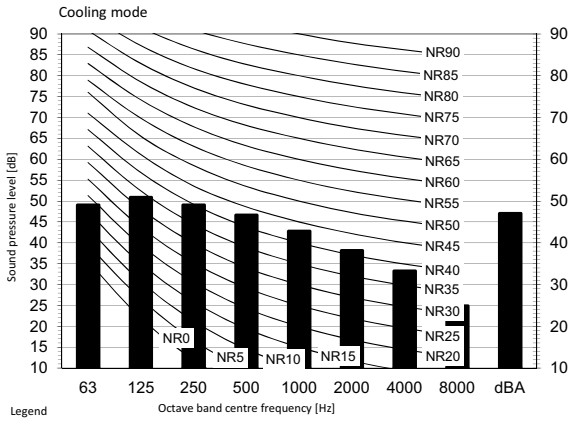

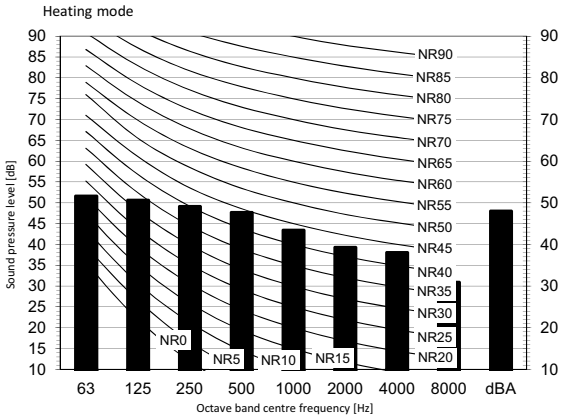

Legend

dBA = A-weighted sound pressure level (A scale according to IEC).

A Scale

B High-tap

Low-tap

Location of microphone

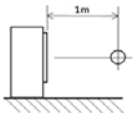

The operation noise measuring method is in accordance with JISC9612.

Measuring location: anechoic chamber

Cooling	Total dB
A	B
dBA	47

Background noise already taken into account.

Operating conditions: power source 220-240 V/220 V 50/60 Hz; JIS standard

Heating	Total dB
A	B
dBA	48

Background noise already taken into account.

Operating conditions: power source 220-240 V/220 V 50/60 Hz; JIS standard

Notes

1 Operating noise varies depending on operation and ambient conditions.

3D095162

9 Sound data

9 - 1 Sound Pressure Spectrum

RX60K

Cooling mode

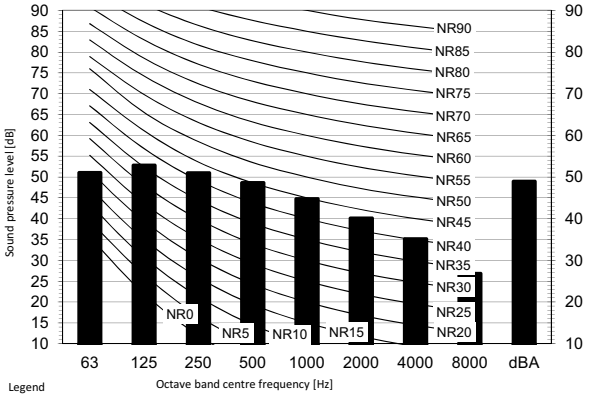

Heating mode

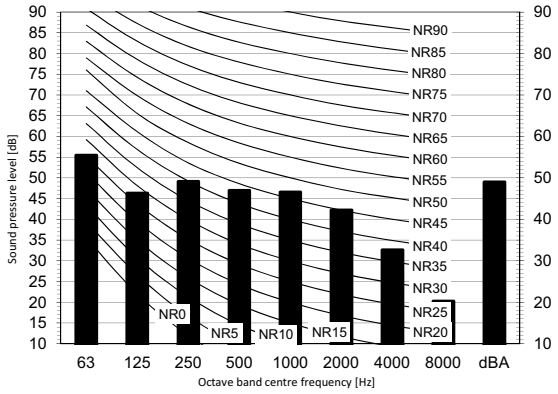

Legend

dBA = A-weighted sound pressure level (A scale according to IEC).

A Scale

B High-tap

Low-tap

Location of microphone

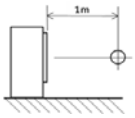

The operation noise measuring method is in accordance with JISC9612.

Measuring location: anechoic chamber

Cooling Total dB

A	B
dBA	49

Background noise already taken into account.

Operating conditions: power source 220-240 V/220 V 50/60 Hz; JIS standard

Heating Total dB

A	B
dBA	49

Background noise already taken into account.

Operating conditions: power source 220-240 V/220 V 50/60 Hz; JIS standard

Notes

1 Operating noise varies depending on operation and ambient conditions.

3D095163

10 Operation range

10 - 1 Operation Range

RX20-35K

Cooling

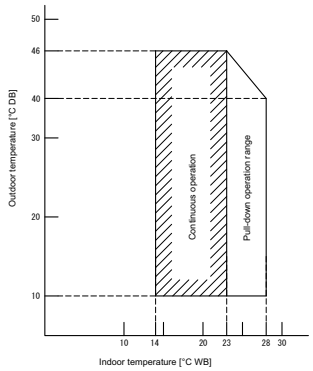

The values above are for connecting with the following indoor unit types:

FTX20J3V1B, FTX25J3V1B, FTX35J3V1B

Cooling

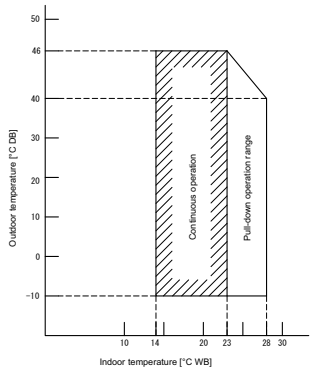

The values above are for connecting with the following indoor unit types:

FTX20KV1B, FTX25KV1B, FTX35KV1B

Heating

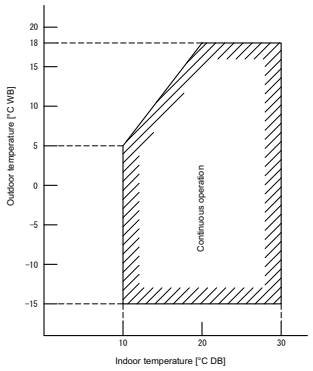

Notes

1. The graphs is based on the following conditions.
   Corresponding refrigerant piping length: 5 m
   Level difference: 0m
   Air flow rate High

3D090678B

RX50-60K

Cooling

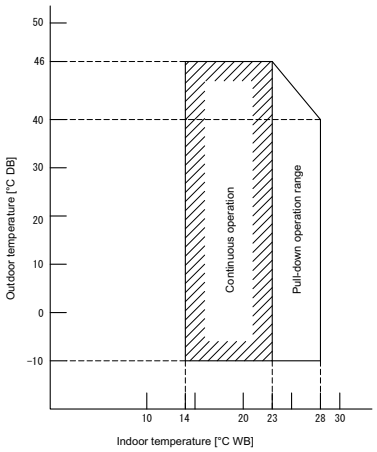

Heating

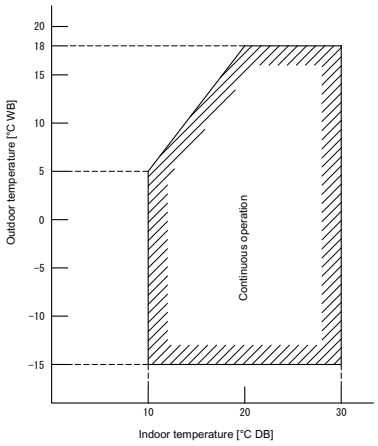

Notes

1. The graphs is based on the following conditions.
   Corresponding refrigerant piping length: 5 m
   Level difference: 0m
   Air flow rate High

3D094149A

Daikin Europe N.V. participates in the Eurovent Certification programme for Liquid Chilling Packages (LCP), Air handling units (AHU), Fan coil units (FCU) and variable refrigerant flow systems (VRF) Check ongoing validity of certificate online: www.eurovent-certification.com or using: www.certiflash.com

The present leaflet is drawn up by way of information only and does not constitute an offer binding upon Daikin Europe N.V.. Daikin Europe N.V. has compiled the content of this leaflet to the best of its knowledge. No express or implied warranty is given for the completeness, accuracy, reliability or fitness for particular purpose of its content and the products and services presented therein. Specifications are subject to change without prior notice. Daikin Europe N.V. explicitly rejects any liability for any direct or indirect damage, in the broadest sense, arising from or related to the use and/or interpretation of this leaflet. All content is copyrighted by Daikin Europe N.V.

BARCODE

Daikin products are distributed by:

EEDEN15-100 03/15 Copyright Daikin
The present publication supersedes EEDEN14-100

DAIKIN EUROPE N.V. Naamloze Vennootschap - Zandvoordestraat 300, B-8400 Oostende - Belgium - www.daikin.eu - BE 0412 120 336 - RPR Oostende