ESiEN09-06

Service Manual

ERQ Condensing Unit Three Phase

ERQ 125/200/250 A7W1B
EKEQD/F/MCBV3 (control box)
EKEXV 50/63/80/100/125/140/200/250

www.daikin.eu

DAIKIN

ESiEN09-06

Service Manual

ERQ Condensing Unit Three Phase

ERQ 125/200/250 A7W1B
EKEQD/F/MCBV3 (control box)
EKEXV 50/63/80/100/125/140/200/250

www.daikin.eu

1. Introduction v
1.1 Safety Cautions v

Part 1 General Information 1

1. Model Names of Outdoor Unit, Control Box and Expansion Valve Kit 2
1.1 Outdoor Units 2
1.2 Control Box 3
1.3 Expansion Valve Kit 4
2. Combination Table 5

Part 2 Specifications 7

1. Specifications 8
1.1 Outdoor Units 8

Part 3 Refrigerant Circuit 11

1. Refrigerant Circuit 12
1.1 ERQ 125 A7W1B 12
1.2 ERQ 200 A7W1B 14
1.3 ERQ 250 A7W1B 16
2. Functional Parts Layout 18
2.1 ERQ 125 A7W1B 18
2.2 ERQ 200 A7W1B 19
2.3 ERQ 250 A7W1B 20

Part 4 Function 21

1. Function general 22
1.1 Symbol 22
1.2 Operation Mode 23
2. Basic Control 24
2.1 Normal Operation 24
2.2 Compressor PI Control 25
2.3 Step Control of Outdoor Unit Fans 27
2.4 Outdoor Unit Fan Control in Cooling Operation 28
3. Special Control 29
3.1 Startup Control 29
3.2 Oil Return Operation 30
3.3 Defrosting Operation 32
3.4 Pump-down Residual Operation 33
3.5 Standby 34
3.6 Stopping Operation 35
4. Protection Control 36
4.1 High Pressure Protection Control 36
4.2 Low Pressure Protection Control 37
4.3 Discharge Pipe Protection Control 38
4.4 Inverter Protection Control 39
4.5 STD Compressor Overload Protection 40
4.6 Injection Control (only for ERQ 125 A7W1B) 40
5. Other Control 41
5.1 Emergency Operation (only for ERQ 250 A7W1B) 41

5.2 Demand Operation 43
5.3 Heating Operation Prohibition 43
6. Outline of Control 44
6.1 Thermostat Sensor in Remote Control (only for Z-control) 44
6.2 .....Hot Start Control (In Heating Operation Only)45
6.3 Freeze Prevention 46
6.4 Low Outdoor Air Temperature Protection Control 47

Part 5 Control Box EKEQ - CBV3 49

1. Different Systems with their Control Boxes 50
1.1 System A: PAIR.....50
1.2 System B: MULTI 52
2. X, Y, Z Control.....55
2.1 X-Control 55
2.2 Y-Control 56
2.3 Z-Control 57
3. Wiring Diagram of Control Box.....58
3.1 D-box.....58
3.2 F-box 59
4. Attention Points 60
5. System A: EKEQF & EKEQD-box: Installation and Operation Manual.61
6. System B: EKEQM-box: Installation and Operation Manual 76

Part 6 Test Operation 89

1. Test Operation 90
1.1 Installation Process 90
1.2 Procedure and Outline 91
1.3 Operation When Power is Turned On 104
2. Outdoor Unit PC Board Layout 105
3. Field Setting 106
3.1 Field Setting from Remote Control 106
3.2 Field Setting from Outdoor Unit.....114

Part 7 Installation and Operation Manual 137

Part 8 Troubleshooting 169

1. Symptom-based Troubleshooting 171
2. Troubleshooting by Remote Control 174
2.1 The INSPECTION / TEST Button.....174
2.2 Self-diagnosis by Wired Remote Control 175
2.3 Remote Control Service Mode 176
2.4 Remote Control Self-Diagnosis Function 178
3. Troubleshooting by Indication on the Remote Control 185
3.1 “A0” AHU: Error of External Protection Device.....185
3.2 “A1” AHU: PC Board Defect 186
3.3 “A3” AHU: Malfunction of Drain Level Control System (S1L).....187
3.4 “A6” AHU: Fan Motor (M1F) Lock, Overload.....189
3.5 “A9” AHU: Malfunction of Moving Part of Electronic Expansion Valve (Y1E).190

3.6 “AF” AHU: Drain Level above Limit 192
3.7 “AJ” AHU: Malfunction of Capacity Determination Device 193
3.8 “C4” AHU: Malfunction of Thermistor (R2T) for Heat Exchanger 194
3.9 “C5” AHU: Malfunction of Thermistor (R3T) for Gas Pipes 195
3.10 “C9” AHU: Malfunction of Thermistor (R1T) for Suction Air 196
3.11 “CJ” AHU: Malfunction of Thermostat Sensor in Remote Control 197
3.12 “E1” Outdoor Unit: PC Board Defect 198
3.13 “E3” Outdoor Unit: Actuation of High Pressure Switch 199
3.14 “E4” Outdoor Unit: Actuation of Low Pressure Sensor 201
3.15 “E5” Outdoor Unit: Inverter Compressor Motor Lock.....203
3.16 “E6” Outdoor Unit: STD Compressor Motor Overcurrent/Lock.....205
3.17 “E7” Outdoor Unit: Malfunction of Outdoor Unit Fan Motor 206
3.18 “E9” Outdoor Unit: Malfunction of Moving Part of Electronic Expansion Valve (Y1E, Y2E) 209
3.19 “F3” Outdoor Unit: Abnormal Discharge Pipe Temperature 211
3.20 “F6” Outdoor Unit: Refrigerant Overcharged.....212
3.21 “H7” Outdoor Unit: Abnormal Outdoor Fan Motor Signal 213
3.22 “H9” Outdoor Unit: Malfunction of Thermistor (R1T) for Outdoor Air....214
3.23 “J2” Outdoor Unit: Current Sensor Malfunction 215
3.24 “J3” Outdoor Unit: Malfunction of Discharge Pipe Thermistor (R3, R31~33T) 216
3.25 “J5” Outdoor Unit: Malfunction of Thermistor (R2T), (R7T) for Suction Pipe 217
3.26 “J6” Outdoor Unit: Malfunction of Thermistor (R4T) for Outdoor Unit Heat Exchanger 218
3.27 “J7” Outdoor Unit: Malfunction of Liquid Pipe Thermistor (R6T) 219
3.28 “J9” Outdoor Unit: Malfunction of Subcooling Heat Exchanger Gas Pipe Thermistor (R5T) 220
3.29 “JA” Outdoor Unit: Malfunction of High Pressure Sensor.....221
3.30 “JC” Outdoor Unit: Malfunction of Low Pressure Sensor 222
3.31 “L4” Outdoor Unit: Malfunction of Inverter Radiating Fin Temperature Rise 223
3.32 “L5” Outdoor Unit: Inverter Compressor Abnormal 225
3.33 “L8” Outdoor Unit: Inverter Current Abnormal 227
3.34 “L9” Outdoor Unit: Inverter Start up Error.....229
3.35 “LC” Outdoor Unit: Malfunction of Transmission Between Inverter and Control PC Board 231
3.36 “P1” Outdoor Unit: Inverter Over-Ripple Protection.....234
3.37 “P4” Outdoor Unit: Malfunction of Inverter Radiating Fin Temperature Rise Sensor 235
3.38 “PJ” Outdoor Unit: Faulty Field Setting after Replacing Main PC Board or Faulty Combination of PC Board.....237
3.39 “UO” Outdoor Unit: Low Pressure Drop Due to Refrigerant Shortage or Electronic Expansion Valve Failure.....238
3.40 “U1” Reverse Phase, Open Phase.....239
3.41 “U2” Outdoor Unit: Power Supply Insufficient or Instantaneous Failure .240
3.42 “U3” Outdoor Unit: Check Operation not Executed 243
3.43 “U4” Malfunction of Transmission Between AHUs 244
3.44 “U5” AHU: Malfunction of Transmission Between Remote Control and AHU.246
3.45 “U9” AHU: Malfunction of Transmission Between AHU and Outdoor Units in the Same System 247
3.46 “UA” Improper Combination of AHU and Outdoor Units, AHUs and Remote Control 248
3.47 “UF” System is not Set yet 250
3.48 “UH” Malfunction of System, Refrigerant System Address Undefined .251

4. Troubleshooting (OP: Unified ON/OFF Controller) 253
4.1 Operation Lamp Blinks 253

Part 9 Appendix.....259

1. Piping Diagrams 260
1.1 Outdoor Unit 260
2. Wiring Diagrams for Reference 263
2.1 Outdoor Unit 263
2.2 Field Wiring 266
3. List of Electrical and Functional Parts 267
3.1 Outdoor Unit 267
4. Option List 269
5. Thermistor Resistance / Temperature Characteristics 270
6. Pressure Sensor 272
7. Method of Checking The Inverter's Power Transistors and Diode Modules 273

Part 10 Precautions for New Refrigerant (R-410A) 275

1. Precautions for New Refrigerant (R-410A) 276
1.1 Outline 276
1.2 Refrigerant Cylinders.....278
1.3 Service Tools.....279

Index i

Drawings & Flow Charts iii

1. Introduction

1.1 Safety Cautions

Cautions and Warnings

- Be sure to read the following safety cautions before conducting repair work.
- The caution items are classified into “ ⚠ **Warning**” and “ ⚠ **Caution**”. The “ ⚠ **Warning**” items are especially important since they can lead to death or serious injury if they are not followed closely. The “ ⚠ **Caution**” items can also lead to serious accidents under some conditions if they are not followed. Therefore, be sure to observe all the safety caution items described below.
- About the pictograms

△ This symbol indicates an item for which caution must be exercised.
The pictogram shows the item to which attention must be paid.

◯ This symbol indicates a prohibited action.
The prohibited item or action is shown inside or near the symbol.

● This symbol indicates an action that must be taken, or an instruction.
The instruction is shown inside or near the symbol.

- After the repair work is complete, be sure to conduct a test operation to ensure that the equipment operates normally, and explain the cautions for operating the product to the customer

1.1.1 Caution in Repair

⚠ **Warning**	
Be sure to disconnect the power cable plug from the plug socket before disassembling the equipment for a repair. Working on the equipment that is connected to a power supply can cause an electrical shook. If it is necessary to supply power to the equipment to conduct the repair or inspecting the circuits, do not touch any electrically charged sections of the equipment.	
If the refrigerant gas discharges during the repair work, do not touch the discharging refrigerant gas. The refrigerant gas can cause frostbite.	
When disconnecting the suction or discharge pipe of the compressor at the welded section, release the refrigerant gas completely at a well-ventilated place first. If there is a gas remaining inside the compressor, the refrigerant gas or refrigerating machine oil discharges when the pipe is disconnected, and it can cause injury.	
If the refrigerant gas leaks during the repair work, ventilate the area. The refrigerant gas can generate toxic gases when it contacts flames.	
The step-up capacitor supplies high-voltage electricity to the electrical components of the outdoor unit. Be sure to discharge the capacitor completely before conducting repair work. A charged capacitor can cause an electrical shock.	
Do not start or stop the air conditioner operation by plugging or unplugging the power cable plug. Plugging or unplugging the power cable plug to operate the equipment can cause an electrical shock or fire.	

Caution	
Do not repair the electrical components with wet hands. Working on the equipment with wet hands can cause an electrical shock.	
Do not clean the air conditioner by splashing water. Washing the unit with water can cause an electrical shock.	
Be sure to provide the grounding when repairing the equipment in a humid or wet place, to avoid electrical shocks.	
Be sure to turn off the power switch and unplug the power cable when cleaning the equipment. The internal fan rotates at a high speed, and cause injury.	
Do not tilt the unit when removing it. The water inside the unit can spill and wet the furniture and floor.	
Be sure to check that the refrigerating cycle section has cooled down sufficiently before conducting repair work. Working on the unit when the refrigerating cycle section is hot can cause burns.	
Use the welder in a well-ventilated place. Using the welder in an enclosed room can cause oxygen deficiency.	

1.1.2 Cautions Regarding Products after Repair

Warning	
Be sure to use parts listed in the service parts list of the applicable model and appropriate tools to conduct repair work. Never attempt to modify the equipment. The use of inappropriate parts or tools can cause an electrical shock, excessive heat generation or fire.	
When relocating the equipment, make sure that the new installation site has sufficient strength to withstand the weight of the equipment. If the installation site does not have sufficient strength and if the installation work is not conducted securely, the equipment can fall and cause injury.	
Be sure to install the product correctly by using the provided standard installation frame. Incorrect use of the installation frame and improper installation can cause the equipment to fall, resulting in injury.	For integral units only
Be sure to install the product securely in the installation frame mounted on a window frame. If the unit is not securely mounted, it can fall and cause injury.	For integral units only
Be sure to use an exclusive power circuit for the equipment, and follow the technical standards related to the electrical equipment, the internal wiring regulations and the instruction manual for installation when conducting electrical work. Insufficient power circuit capacity and improper electrical work can cause an electrical shock or fire.	

Warning	
Be sure to use the specified cable to connect between the AHU and outdoor units. Make the connections securely and route the cable properly so that there is no force pulling the cable at the connection terminals. Improper connections can cause excessive heat generation or fire.	
When connecting the cable between the AHU and outdoor units, make sure that the terminal cover does not lift off or dismount because of the cable. If the cover is not mounted properly, the terminal connection section can cause an electrical shock, excessive heat generation or fire.	
Do not damage or modify the power cable. Damaged or modified power cable can cause an electrical shock or fire. Placing heavy items on the power cable, and heating or pulling the power cable can damage the cable.	
Do not mix air or gas other than the specified refrigerant (R-410A) in the refrigerant system. If air enters the refrigerating system, an excessively high pressure results, causing equipment damage and injury.	
If the refrigerant gas leaks, be sure to locate the leak and repair it before charging the refrigerant. After charging refrigerant, make sure that there is no refrigerant leak. If the leak cannot be located and the repair work must be stopped, be sure to perform pump-down and close the service valve, to prevent the refrigerant gas from leaking into the room. The refrigerant gas itself is harmless, but it can generate toxic gases when it contacts flames, such as fan and other heaters, stoves and ranges.	
When replacing the coin battery in the remote control, be sure to disposed of the old battery to prevent children from swallowing it. If a child swallows the coin battery, see a doctor immediately.	

Caution	
Installation of a leakage breaker is necessary in some cases depending on the conditions of the installation site, to prevent electrical shocks.	
Do not install the equipment in a place where there is a possibility of combustible gas leaks. If a combustible gas leaks and remains around the unit, it can cause a fire.	
Be sure to install the packing and seal on the installation frame properly. If the packing and seal are not installed properly, water can enter the room and wet the furniture and floor.	For integral units only

1.1.3 Inspection after Repair

Warning	
Check to make sure that the power cable plug is not dirty or loose, then insert the plug into a power outlet all the way. If the plug has dust or loose connection, it can cause an electrical shock or fire.	
If the power cable and lead wires have scratches or deteriorated, be sure to replace them. Damaged cable and wires can cause an electrical shock, excessive heat generation or fire.	
Do not use a joined power cable or extension cable, or share the same power outlet with other electrical appliances, since it can cause an electrical shock, excessive heat generation or fire.	

Caution	
Check to see if the parts and wires are mounted and connected properly, and if the connections at the soldered or crimped terminals are secure. Improper installation and connections can cause excessive heat generation, fire or an electrical shock.	
If the installation platform or frame has corroded, replace it. Corroded installation platform or frame can cause the unit to fall, resulting in injury.	
Check the grounding, and repair it if the equipment is not properly grounded. Improper grounding can cause an electrical shock.	
Be sure to measure the insulation resistance after the repair, and make sure that the resistance is 1 Mohm or higher. Faulty insulation can cause an electrical shock.	
Be sure to check the drainage of the AHU after the repair. Faulty drainage can cause the water to enter the room and wet the furniture and floor.	

1.1.4 Using Icons

Icons are used to attract the attention of the reader to specific information. The meaning of each icon is described in the table below:

1.1.5 Using Icons List

Icon	Type of Information	Description
Note:	Note	A “note” provides information that is not indispensable, but may nevertheless be valuable to the reader, such as tips and tricks.
Caution	Caution	A “caution” is used when there is danger that the reader, through incorrect manipulation, may damage equipment, loose data, get an unexpected result or has to restart (part of) a procedure.
Warning	Warning	A “warning” is used when there is danger of personal injury.
	Reference	A “reference” guides the reader to other places in this binder or in this manual, where he/she will find additional information on a specific topic.

Part 1
General Information

1. Model Names of Outdoor Unit, Control Box and Expansion Valve Kit....2
   1.1 Outdoor Units 2
   1.2 Control Box.....3
   1.3 Expansion Valve Kit 4
2. Combination Table 5

1. Model Names of Outdoor Unit, Control Box and Expansion Valve Kit

1.1 Outdoor Units

Outlook

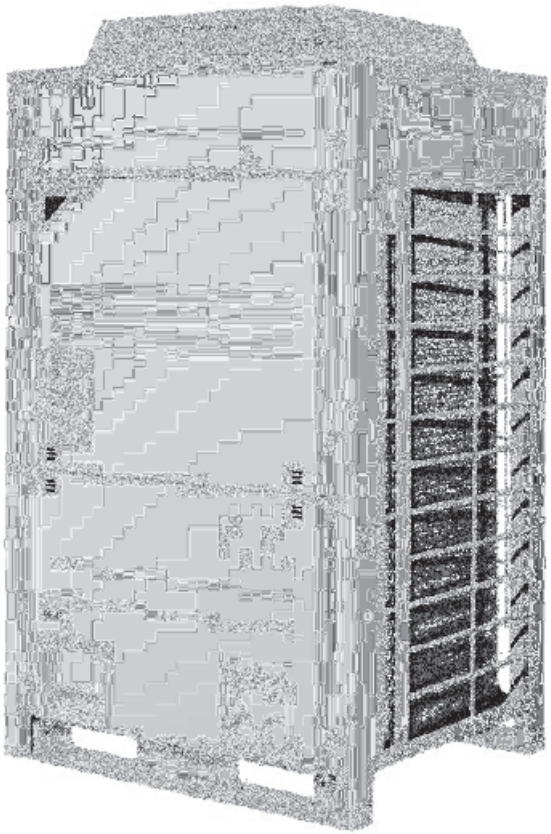

Model name

Series	Model Name				Power Supply
Inverter Heat Pump	ERQ	125A	200A	250A	W1B

W1: 3 phase 380~415V, 50Hz

1.2 Control Box

Outlook

Types

We distinguish 3 types of control boxes:

- EKEQD: Z-control
- EKEQF: X,Y-control
- EKEQM: Z-control (only with VRV outdoor unit, no ERQ)

Control type X
Control of air temperature (T_d, T_s or T_r) by means of external device (DDC controller).
Control type Y
Control of evaporating and condensing temperature (T_e, T_c) by Daikin control (no DDC needed).
Control type Z
Control of air temperature (T_s or T_r) by Daikin control (no DDC needed).

Legend:

T_d	Discharge air control
T_s	Suction air control
T_r	Room air control
T_e	Evaporating temperature control
T_c	Condensing temperature control
AHU	Air handling unit
DDC	Digital controller

1.3 Expansion Valve Kit

Outlook

Expansion valve kit installation drawing:

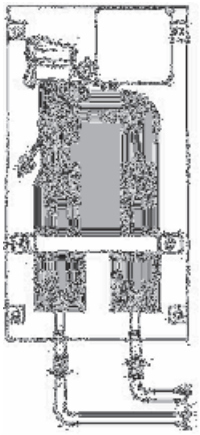

Model name

Limits for outdoor unit (expansion valve kit).

Outdoor unit (class)	EKEXV kit
125	EKEXV63~140
200	EKEXV100~250
250	EKEXV125~250

Depending on the heat exchanger, a connectable EKEXV (expansion valve kit) must be selected to these limitations.

	Allowed heat exchanger volume (dm^3)		Allowed heat exchanger capacity (kW)	
EKEXV class	Minimum	Maximum	Minimum	Maximum
63	1.66	2.08	6.3	7.8
80	2.09	2.64	7.9	9.9
100	2.65	3.30	10.0	12.3
125	3.31	4.12	12.4	15.4
140	4.13	4.62	15.5	17.6
200	4.63	6.60	17.7	24.6
250	6.61	8.25	24.7	30.8

Saturated suction temperature (SST) = 6°C, SH (superheat) = 5 K, air temperature = 27°C DB / 19°C WB.

2. Combination Table

		Control box		Expansion valve kit						
Outdoor unit		EKEQDCBV3	EKEQFCBV3	EKEXV63	EKEXV80	EKEXV100	EKEXV125	EKEXV140	EKEXV200	EKEXV250
three phase	ERQ125	P	P	P	P	P	P	P	-	-
	ERQ200	P	P	-	-	P	P	P	P	P
	ERQ250	P	P	-	-	-	P	P	P	P

Heat pump

P: Pair: Combination depending on AHU heat exchanger volume and capacity.

	Allowed heat exchanger volume (dm^3)		Allowed heat exchanger capacity (kW)	
EKEXV class	Minimum	Maximum	Minimum	Maximum
63	1.66	2.08	6.3	7.8
80	2.09	2.64	7.9	9.9
100	2.65	3.3	10	12.3
125	3.31	4.12	12.4	15.4
140	4.13	4.62	15.5	17.6
200	4.63	6.6	17.7	24.6
250	6.61	8.25	24.7	30.8

Saturated suction temperature (SST) = 6°C, SH (superheat) = 5 K, air temperature = 27°C DB / 19°C WB.

Note: If conflicting result occurs, capacity selection has priority over volume.

Part 2
Specifications

1. Specifications 8
1.1 Outdoor Units 8

1. Specifications

1.1 Outdoor Units

Heat Pump 50Hz Standard Series ERQ 125/200/250 A7W1B

TECHNICAL SPECIFICATIONS				ERQ125A7W1B	ERQ200A7W1B	ERQ250A7W1B
Nominal capacity	Cooling		kW	14,0	22,4	28,0
	Heating		kW	16,0	25,0	31,5
COP	Cooling			3,98	4,29	3,77
	Heating			4,00	4,50	4,09
Capacity range			HP	5	8	10
Nominal input	Cooling		kW	3,52	5,22	7,42
	Heating		kW	4,00	5,56	7,70
PED category				2		
Casing	Colour			Daikin white		
	Material			Painted galvanised steel		
Dimensions	Unit	Height	mm	1680		
		Width	mm	635	930	
		Depth	mm	765		
	Packing	Height	mm	1855		
		Width	mm	796	1055	
		Depth	mm	860		
Weight	Unit		kg	159	187	240
	Packed unit		kg	182	217	273
Packing information	Carton		kg	3,8	4,02	
	Wood		kg	19,15	20,85	
	Plastic		kg	0,215	0,265	
Heat exchanger	Specifications	Length	mm	1483	1778	
		Nr of rows		54		
		Fin pitch		2		
		Nr of passes		8	18	
		Face area	m²	1,762	2,112	
		Nr of stages		2		
		Empty tubeplate hole		0		
	Tube type			HI-XSS (8)		
	Fin	Type		Non-symmetric waffle louvre		
		Treatment		Hydrophylic and anti corrosion resistant		
Fan	Type			Propeller		
	Quantity			1		
	Air flow rate (nominal at 230V)	Cooling	m³/min	95	171	185
		Heating	m³/min	95	171	185
	External static pressure		Pa	78 Pa in high static pressure		
	Discharge direction			Vertical		
	Motor	Quantity		1		
		Model		Brushless DC		
		Speed	rpm			
		Output	W	350	750	
		Speed (nominal) Cooling	rpm			
		Speed (nominal) Heating	rpm			
Compressor	Quantity			1		2
	Motor	Quantity		1		
		Model		Inverter		
		Speed	rpm	6300	7980	6300
		Motor output	kW	2,8	3,8	1,2
		Type		Hermetically sealed scroll compressor		
		Crankcase heater	W	33		
		Quantity		0		1
		Model				ON - OFF
		Speed	rpm			2900
		Motor output	kW			4,5
		Type				Hermetically sealed scroll compressor
		Crankcase heater	W			33

TECHNICAL SPECIFICATIONS				ERQ125A7W1B	ERQ200A7W1B	ERQ250A7W1B
Operation range	Cooling	Min	°CDB	-5		
		Max	°CDB	43		
	Heating	Min	°CWB	-20		
		Max	°CWB	15		
Sound level (nominal)	Sound power		dBA	72	78	
	Sound pressure		dBA	54	57	58
Refrigerant	Type			R-410A		
	Charge		kg	6,2	7,7	8,4
	Control			Electronic expansion valve		
	Nr of circuits			1		
Refrigerant oil	Type			Synthetic (ether) oil		
	Charged volume		l	1,7	2,1	4,3
Piping connections	Liquid	Type		Brazing connection		
		Diameter (OD)	mm	9,52		
	Gas	Type		Brazing connection		
		Diameter (OD)	mm	15,9	19,1	22,2
	Discharge gas	Type				
		Diameter (OD)	mm			
	Drain	Quantity				
		Diameter (OD)	mm			
	Heat insulation			Both liquid and gas		
	Max total length		m	55		
Defrost method				Reversed cycle		
Defrost control				Sensor for outdoor heat exchanger temperature		
Capacity control method				Inverter controlled		
Capacity control [%]				~ 100		
Safety devices				High pressure switch		
				Fan driver overload protector		
				Overcurrent relay		
				Inverter overload protector		
				PC board fuse		
Standard accessories	Item			Installation manual		
	Quantity			1		
Standard accessories	Item			Operation manual		
	Quantity			1		
Standard accessories	Item			Connection pipes		
	Quantity			4		
Notes				Nominal cooling capacities are based on: indoor temperature: 27°CDB/19°CWB, outdoor temperature: 35°CDB, equivalent refrigerant piping: 7,5m, level difference: 0m.		
				Nominal heating capacities are based on: indoor temperature: 20°CDB, outdoor temperature: 7°CDB/6°CWB, equivalent refrigerant piping: 7,5m, level difference: 0m.		
				Sound power level is an absolute value that a sound generates.		
				Sound pressure level is a relative value, depending on the distance and acoustic environment. For more details, please refer to sound level drawings.		
				Sound values are measured in a semi-anechoic room.		

ELECTRICAL SPECIFICATIONS				ERQ125A7W1B	ERQ200A7W1B	ERQ250A7W1B
Power supply	Name			W1		
	Phase			3N~		
	Frequency		Hz	50		
	Voltage		V	400		
Current	Nominal running current (RLA)	Cooling	A	5,1	7,5	11,3
		Heating	A	5,8	8,2	11,1
	Starting current (MSC)		A			74
	Zmax		Ω	-	0,27	
	Minimum Ssc value		kVA	-	889	842
	Min circuit amps (MCA)		A	11,9	18,5	21,6
	Max fuse amps (MFA)		A	16	25	
	Total overcurrent amps (TOCA)		A	15,6	16,5	31,5
	Full load amps (FLA)		A	0,4	0,7	0,9
Voltage range			V	400 ±10%		
Wiring connections	For power supply	Quantity		5		
		Remark		Earth wire included		
	For connection with indoor	Quantity		2		
		Remark		F1 - F2		
Power supply intake				Both AHU and outdoor unit		

ELECTRICAL SPECIFICATIONS	ERQ125A7W1B	ERQ200A7W1B	ERQ250A7W1B
Notes	(1) European/international technical standard setting the limits for voltage changers, voltage fluctuations and flicker in public low-voltage supply systems for equipment with rated ≤ 75A. (2) European/international technical standard setting the limits for harmonic currents produced by equipment connected to public low-voltage system with input current > 16A and ≤ 75A per phase. (3) Short-circuit power. (4) System impedance.		

Notes:

- MFA is used to select the circuit breaker and the ground fault circuit interrupter (earth leakage circuit breaker).
- MSC means the maximum current during start up of the compressor.
- Maximum allowable voltage range variation between phases is 2%.
- RLA is based on following conditions: indoor temperature: 27°CDB/19°CWB, outdoor temperature: 35°CDB.
- Select wire size based on the value of MCA or TOCA.
- TOCA means the total value of each OC set.
- Voltage range: units are suitable for use on electrical systems where voltage supplied to unit terminal is not below or above listed range limits.
- FLA means the full load amps of the fan motor.
- In accordance with EN/IEC 61000-3-11 (1), respectively EN/IEC 61000-3-12 (2), it may be necessary to consult the distribution network operator to ensure that the equipment is connected only to a supply with Zsys (4) ≤ Zmax, respectively Ssc (3) ≥ minimum Ssc value.

Part 3
Refrigerant Circuit

1. Refrigerant Circuit 12
   1.1 ERQ 125 A7W1B 12
   1.2 ERQ 200 A7W1B 14
   1.3 ERQ 250 A7W1B 16
2. Functional Parts Layout 18
   2.1 ERQ 125 A7W1B 18
   2.2 ERQ 200 A7W1B 19
   2.3 ERQ 250 A7W1B 20

1. Refrigerant Circuit

1.1 ERQ 125 A7W1B

No. in refrigerant system diagram	Symbol	Name	Major Function
A	M1C	Inverter compressor (INV)	Inverter compressor is operated on frequencies between 52Hz and 188Hz by using the inverter. The number of operating steps is as follows when Inverter compressor is operated. RXYQ5P: 18 steps
D	M1F	Inverter fan	Since the system is of air heat exchanging type, the fan is operated at 9-step rotation speed by using the inverter.
E	Y1E	Electronic expansion valve (Main: EV1)	While in heating operation, PI control is applied to keep the outlet superheated degree of air heat exchanger constant.
G	Y1S	Solenoid valve (Hot gas: SVP)	Used to prevent the low pressure from transient falling.
J	Y2S	Solenoid valve (Oil return: SVO)	Used to return oil from the accumulator to the compressor.
K	Y4S	Solenoid valve (Injection) SVT	Used to cool the compressor by injecting refrigerant when the compressor discharge temperature is high.
M	Y3S	4-way valve	Used to switch the operation mode between cooling and heating.
N	S1NPH	High pressure sensor	Used to detect high pressure.
O	S1NPL	Low pressure sensor	Used to detect low pressure.
P	S1PH	HP pressure switch (For INV compressor)	In order to prevent the increase of high pressure when a malfunction occurs, this switch is activated at high pressure of 4.0 MPa or more to stop the compressor operation.
T	—	Pressure regulating valve 1	This valve opens at a pressure of 4.0 MPa for prevention of pressure increase, thus resulting in no damage of functional parts due to the increase of pressure in transportation or storage.
W	—	Capillary tube	Used to return the refrigerating oil separated through the oil separator to the compressor.
1	R1T	Thermistor (Outdoor air: Ta)	Used to detect outdoor temperature, correct discharge pipe temperature, and others.
2	R2T	Thermistor (Suction pipe: Ts)	Used to detect suction pipe temperature.
3	R3T	Thermistor (INV discharge pipe: Tdi)	Used to detect discharge pipe temperature, make the temperature protection control of compressor, and others.
4	R4T	Thermistor (Heat exchanger deicer: Tb)	Used to detect liquid pipe temperature of air heat exchanger, determine defrosting operation, and others.
5	R6T	Thermistor (Liquid pipe Tl)	Used to detect liquid pipe temperature.
6	R7T	Thermistor (Accumulator inlet Ts1)	Used to detect gas pipe temperature at the accumulator inlet. Keep the suction superheated degree constant in heating operation, and others.

ERQ 125 A7W1B

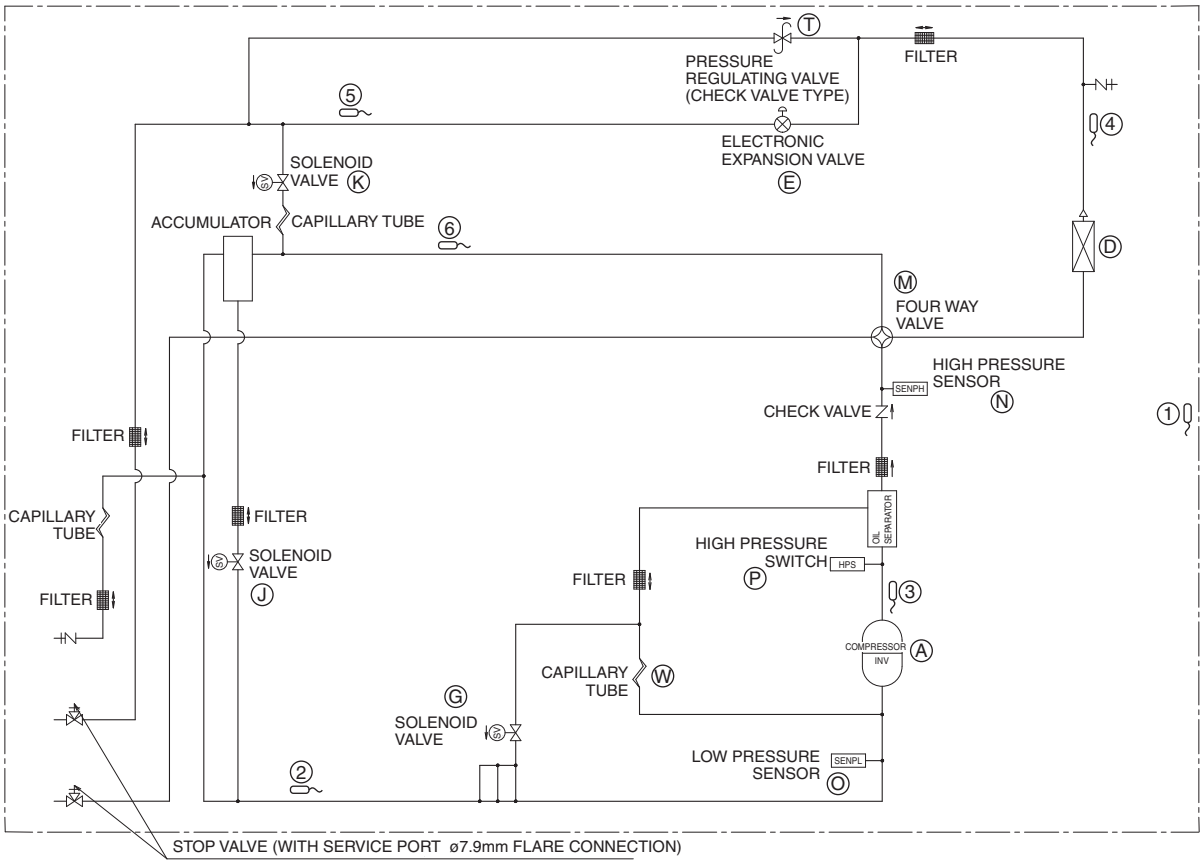

3D050782

1.2 ERQ 200 A7W1B

No. in refrigerant system diagram	Symbol	Name	Major Function
A	M1C	Inverter compressor (INV)	Inverter compressor is operated on frequencies between 52Hz and 266Hz by using the inverter, while Standard compressor is operated with commercial power supply only. The number of operating steps is as follows when Inverter compressor is operated in combination with Standard compressor. RXYQ8P: 24 steps
D	M1F	Inverter fan	Since the system is of air heat exchanging type, the fan is operated at 9-step rotation speed by using the inverter.
E	Y1E	Electronic expansion valve (Main: EV1)	While in heating operation, PI control is applied to keep the outlet superheated degree of air heat exchanger constant.
F	Y2E	Electronic expansion valve (Subcool: EV2)	PI control is applied to keep the outlet superheated degree of subcooling heat exchanger constant.
G	Y1S	Solenoid valve (Hot gas: SVP)	Used to prevent the low pressure from transient falling.
J	Y2S	Solenoid valve (Oil return: SVO)	Used to return oil from the accumulator to the compressor.
M	Y3S	4-way valve	Used to switch the operation mode between cooling and heating.
N	S1NPH	High pressure sensor	Used to detect high pressure.
O	S1NPL	Low pressure sensor	Used to detect low pressure.
P	S1PH	HP pressure switch (For INV compressor)	In order to prevent the increase of high pressure when a malfunction occurs, this switch is activated at high pressure of 4.0 MPa or more to stop the compressor operation.
T	—	Pressure regulating valve (Liquid pipe)	This valve opens at a pressure of 4.0 MPa for prevention of pressure increase, thus resulting in no damage of functional parts due to the increase of pressure in transportation or storage.
V	—	Subcooling heat exchanger	Used to subcool liquid refrigerant from the electronic expansion valve (cooling) or AHUs (heating).
W	—	Capillary tube	Used to return the refrigerating oil separated through the oil separator to the INV compressor.
1	R1T	Thermistor (Outdoor air: Ta)	Used to detect outdoor temperature, correct discharge pipe temperature, and others.
2	R2T	Thermistor (Suction pipe: Ts)	Used to detect suction pipe temperature.
3	R3T	Thermistor (INV discharge pipe: Tdi)	Used to detect discharge pipe temperature, make the temperature protection control of compressor, and others.
4	R4T	Thermistor (Heat exchanger deicer: Tb)	Used to detect liquid pipe temperature of air heat exchanger, determine defrosting operation, and others.
5	R5T	Thermistor (Subcooling heat exchanger gas pipe: Tsh)	Used to detect gas pipe temperature on the evaporation side of subcooling heat exchanger, keep the superheated degree at the outlet of subcooling heat exchanger constant, and others.
6	R6T	Thermistor (Receiver outlet liquid pipe: Tl)	Used to detect receiver outlet liquid pipe temperature.
7	R7T	Thermistor (Accumulator inlet)	Used to detect gas pipe temperature at the accumulator inlet. Keep the suction superheated degree constant in heating operation, and others.

ERQ 200 A7W1B

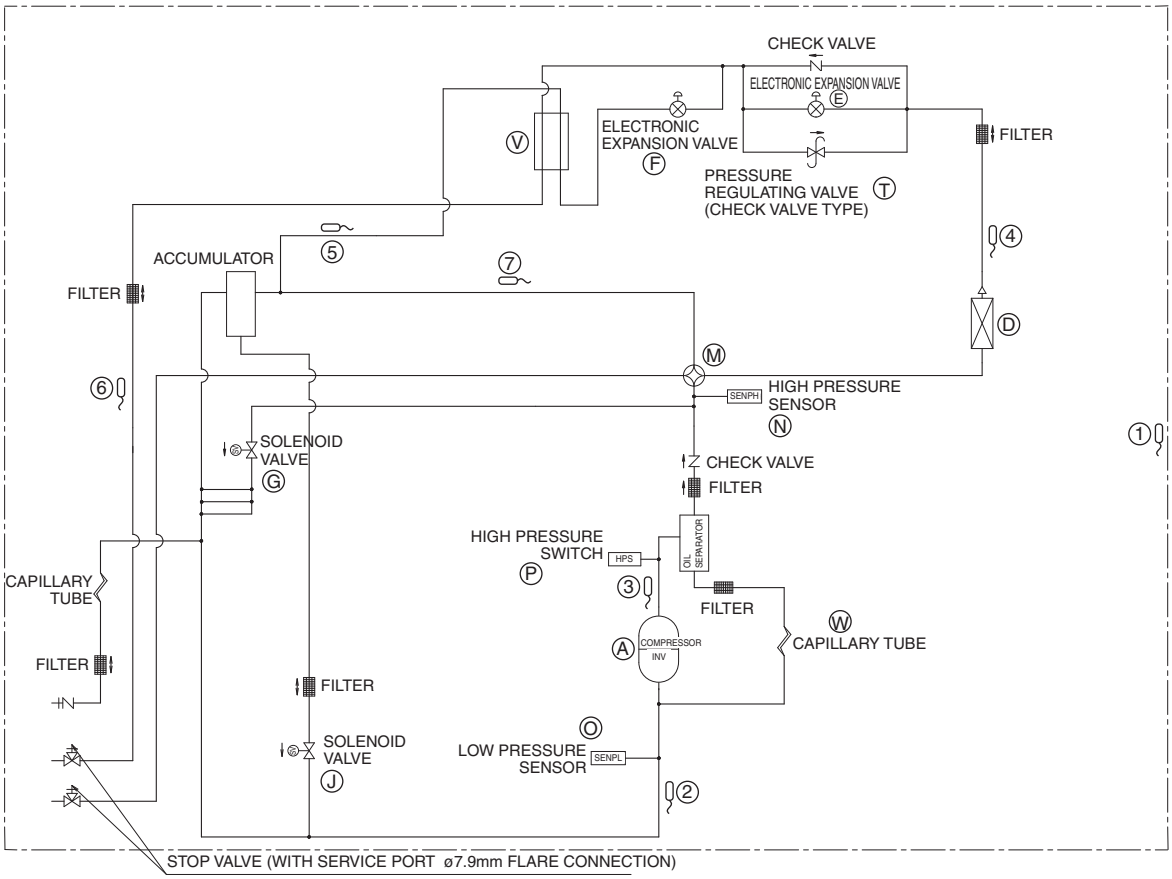

3D050783

1.3 ERQ 250 A7W1B

No. in refrigerant system diagram	Symbol	Name	Major Function
A	M1C	Inverter compressor (INV)	Inverter compressor is operated on frequencies between 52Hz and 210Hz by using the inverter, while Standard compressor is operated with commercial power supply only. The number of operating steps is as follows when Inverter compressor is operated in combination with Standard compressor. RXYQ10, 12P: 37 steps
B	M2C	Standard compressor 1 (STD1)	
D	M1F	Inverter fan	Since the system is of air heat exchanging type, the fan is operated at 9-step rotation speed by using the inverter.
E	Y1E	Electronic expansion valve (Main: EV1)	While in heating operation, PI control is applied to keep the outlet superheated degree of air heat exchanger constant.
F	Y2E	Electronic expansion valve (Subcool: EV3)	PI control is applied to keep the outlet superheated degree of subcooling heat exchanger constant.
G	Y1S	Solenoid valve (Hot gas: SVP)	Used to prevent the low pressure from transient falling.
J	Y2S	Solenoid valve (Oil return: SVO)	Used to return oil from the accumulator to the compressor.
M	Y3S	4-way valve	Used to switch the operation mode between cooling and heating.
N	S1NPH	High pressure sensor	Used to detect high pressure.
O	S1NPL	Low pressure sensor	Used to detect low pressure.
P	S1PH	HP pressure switch (For INV compressor)	In order to prevent the increase of high pressure when a malfunction occurs, this switch is activated at high pressure of 4.0 MPa or more to stop the compressor operation.
Q	S2PH	HP pressure switch (For STD compressor 1)	
U	—	Pressure regulating valve (Liquid pipe)	This valve opens at a pressure of 4.0 MPa for prevention of pressure increase, thus resulting in no damage of functional parts due to the increase of pressure in transportation or storage.
V	—	Subcooling heat exchanger	Used to subcool liquid refrigerant from the electronic expansion valve (cooling) or AHUs (heating).
W	—	Capillary tube	Used to return the refrigerating oil separated through the oil separator to the INV compressor.
X	—	Capillary tube	Used to return the refrigerating oil separated through the oil separator to the STD1 compressor.
1	R1T	Thermistor (Outdoor air: Ta)	Used to detect outdoor temperature, correct discharge pipe temperature, and others.
2	R2T	Thermistor (Suction pipe: Ts)	Used to detect suction pipe temperature.
3	R31T	Thermistor (INV discharge pipe: Tdi)	Used to detect discharge pipe temperature, make the temperature protection control of compressor, and others.
4	R32T	Thermistor (STD1 discharge pipe: Tds1)	
5	R4T	Thermistor (Heat exchanger deicer: Tb)	Used to detect liquid pipe temperature of air heat exchanger, determine defrosting operation, and others.
6	R5T	Thermistor (Subcooling heat exchanger gas pipe: Tsh)	Used to detect gas pipe temperature on the evaporation side of subcooling heat exchanger, keep the superheated degree at the outlet of subcooling heat exchanger constant, and others.
7	R6T	Thermistor (Liquid pipe: Tl)	Used to detect liquid pipe temperature.
8	R7T	Thermistor (Accumulator inlet)	Used to detect gas pipe temperature at the accumulator inlet. Keep the suction superheated degree constant in heating operation, and others.

ERQ 250 A7W1B

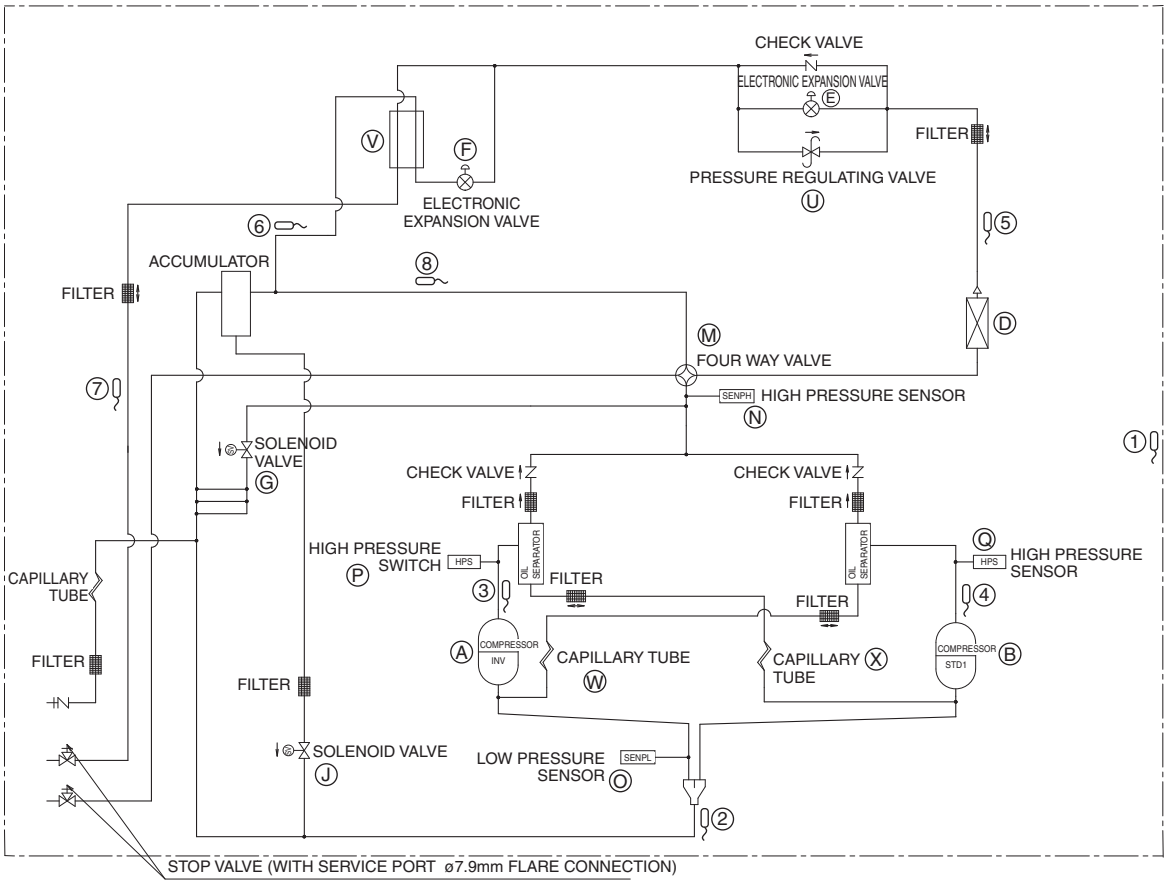

3D050784

2. Functional Parts Layout

2.1 ERQ 125 A7W1B

Plan

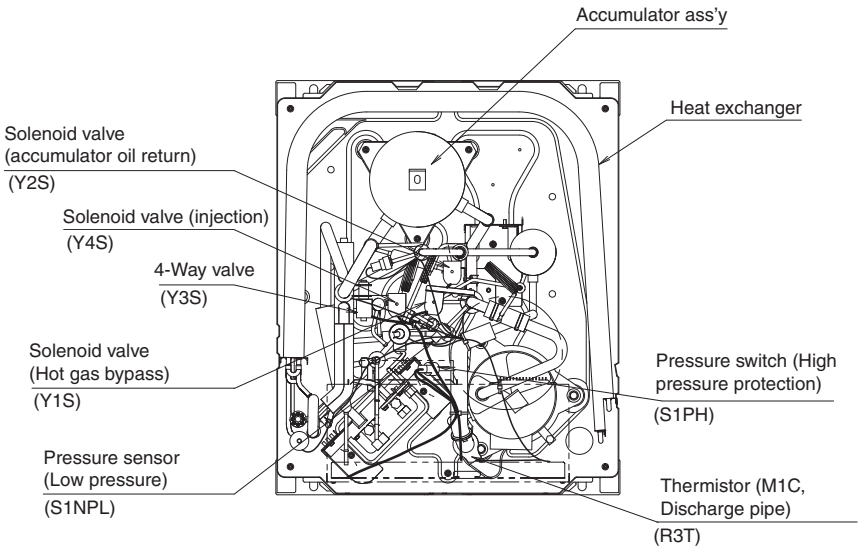

Front View

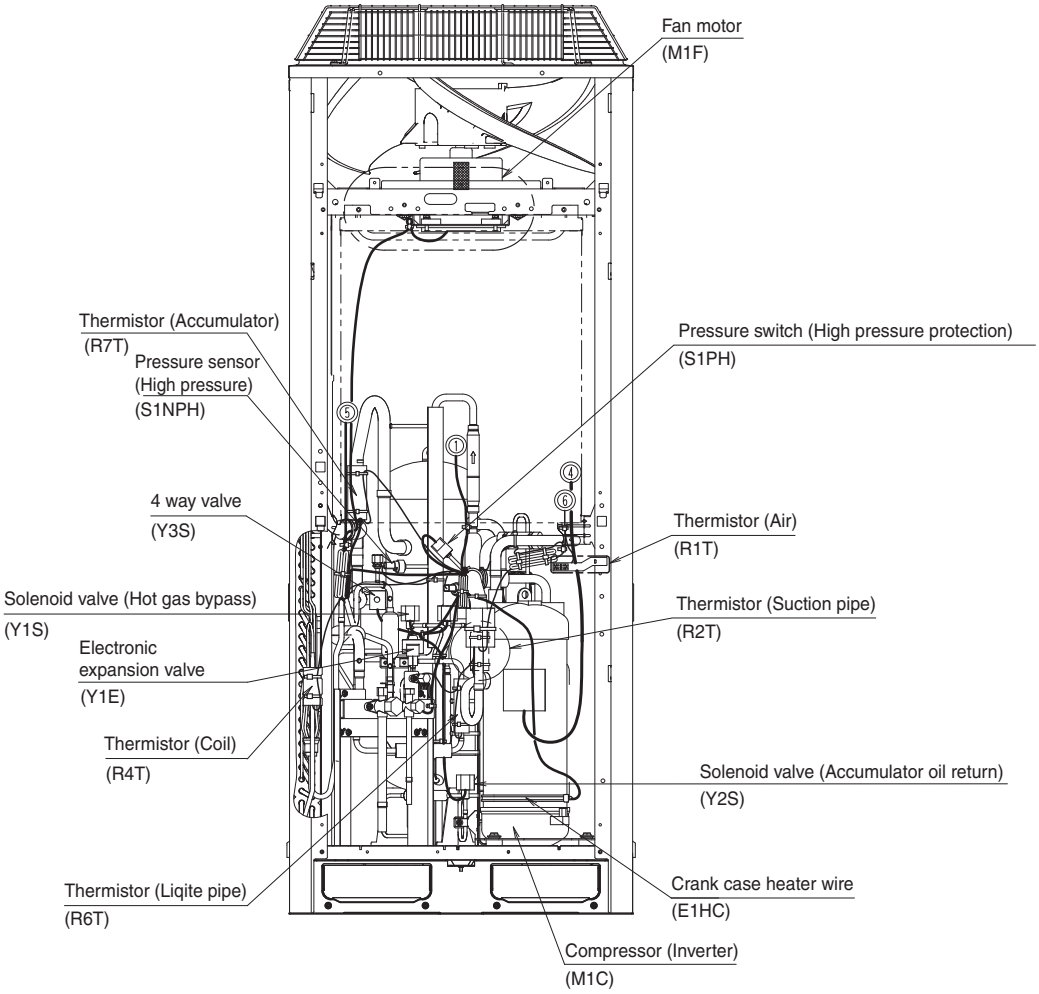

2.2 ERQ 200 A7W1B

Plan

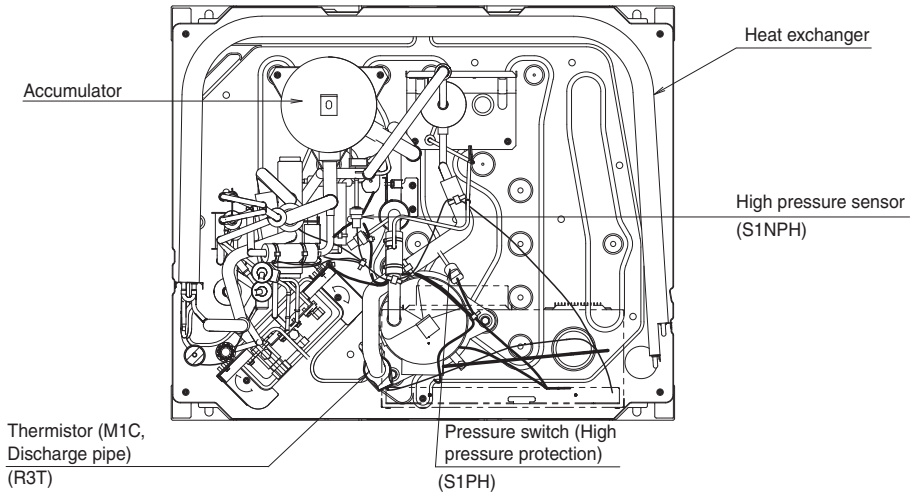

Front View

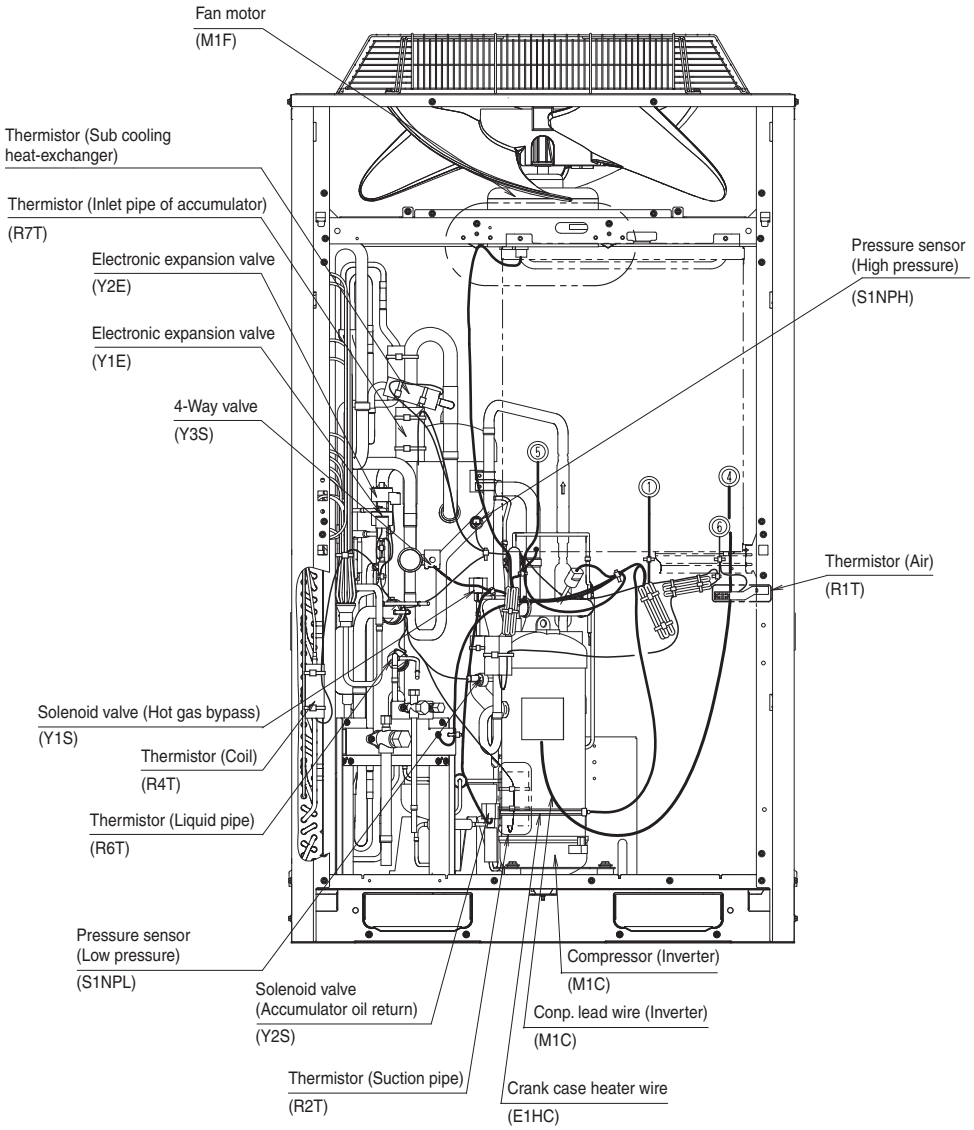

2.3 ERQ 250 A7W1B

Plan

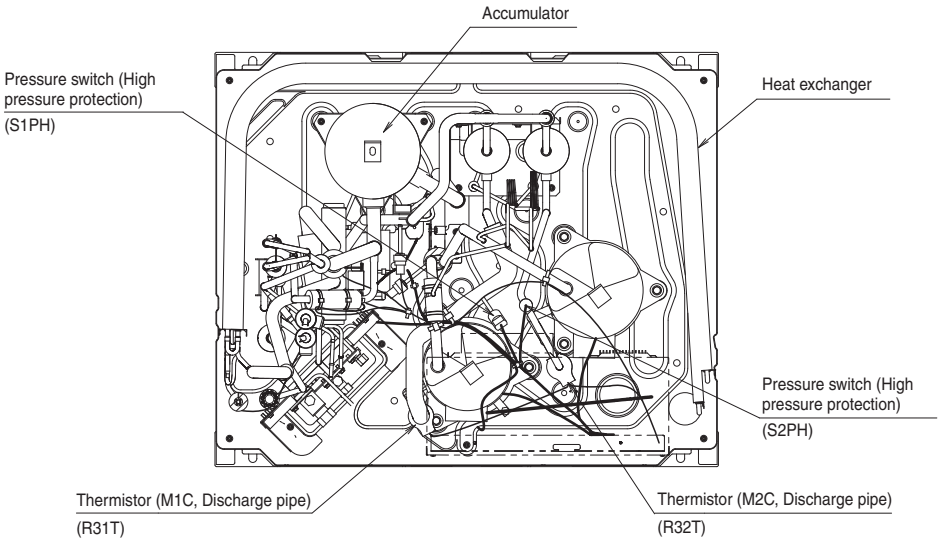

Front View

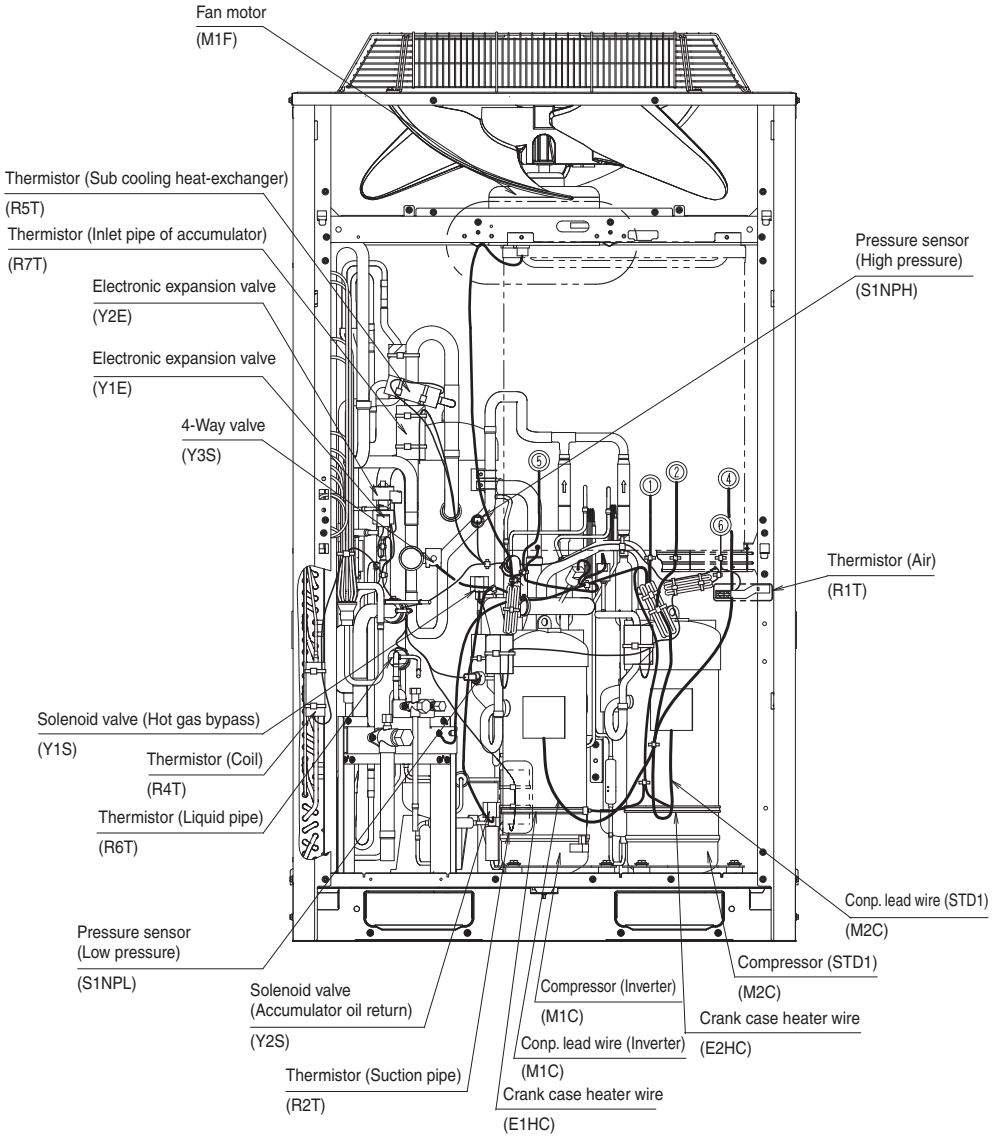

Part 4
Function

1. Function general 22
1.1 Symbol 22
1.2 Operation Mode.....23
2. Basic Control.....24
2.1 Normal Operation 24
2.2 Compressor PI Control.....25
2.3 Step Control of Outdoor Unit Fans 27
2.4 Outdoor Unit Fan Control in Cooling Operation 28
3. Special Control.....29
3.1 Startup Control 29
3.2 Oil Return Operation 30
3.3 Defrosting Operation 32
3.4 Pump-down Residual Operation 33
3.5 Standby 34
3.6 Stopping Operation 35
4. Protection Control 36
4.1 High Pressure Protection Control.....36
4.2 Low Pressure Protection Control.....37
4.3 Discharge Pipe Protection Control 38
4.4 Inverter Protection Control 39
4.5 STD Compressor Overload Protection.....40
4.6 Injection Control (only for ERQ 125 A7W1B) 40
5. Other Control.....41
5.1 Emergency Operation (only for ERQ 250 A7W1B) 41
5.2 Demand Operation 43
5.3 Heating Operation Prohibition 43
6. Outline of Control 44
6.1 Thermostat Sensor in Remote Control (only for Z-control) 44
6.2 Hot Start Control (In Heating Operation Only).....45
6.3 Freeze Prevention 46
6.4 Low Outdoor Air Temperature Protection Control 47

1. Function general

1.1 Symbol

Symbol	Electric symbol	Description or function
20S1	Y3S	Four way valve (Energize during heating)
DSH	–	Discharge pipe superheated degree
DSHi	–	Discharge pipe superheat of inverter compressor
DSHs	–	Discharge pipe superheat of standard compressor
EV	–	Opening of electronic expansion valve
EV1	Y1E	Electronic expansion valve for main heat exchanger
EV2	Y2E	Electronic expansion valve for sub-coolig heat exchanger
HTDi	–	Value of INV compressor discharge pipe temperature (R31T) compensated with outdoor air temperature
HTDs	–	Value of STD compressor discharge pipe temperature (R32T, R33T) compensated with outdoor air temperature
Pc	S1NPH	Value detected by high pressure sensor
Pe	S1NPL	Value detected by low pressure sensor
SH	–	Evaporator outlet superheat
SHS	–	Target evaporator outlet superheat
SVO	Y2S	Solenoid valve for oil return
SVP	Y1S	Solenoid valve for hot gas bypass
SVT	Y4S	Solenoid valve for injection
Ta	R1T (A1P)	Outdoor air temperature
Tb	R4T	Heat exchanger outlet temperature at cooling
Ts2	R2T	Suction pipe temperature detected with the suction pipe thermistor (R2T)
Tsh	R5T (–)	Temperature detected with the subcooling heat exchanger outlet thermistor (R5T)
Tc	–	High pressure equivalent saturation temperature
TcS	–	Target temperature of Tc
Te	–	Low pressure equivalent saturation temperature
TeS	–	Target temperature of Te
Tfin	R1T	Inverter fin temperature
Tl	R6T	Liquid pipe temperature detected with the liquid pipe thermistor (R6T)
Tp	–	Calculated value of compressor port temperature
Ts1	R7T	Suction pipe temperature detected with the accumulator inlet thermistor

1.2 Operation Mode

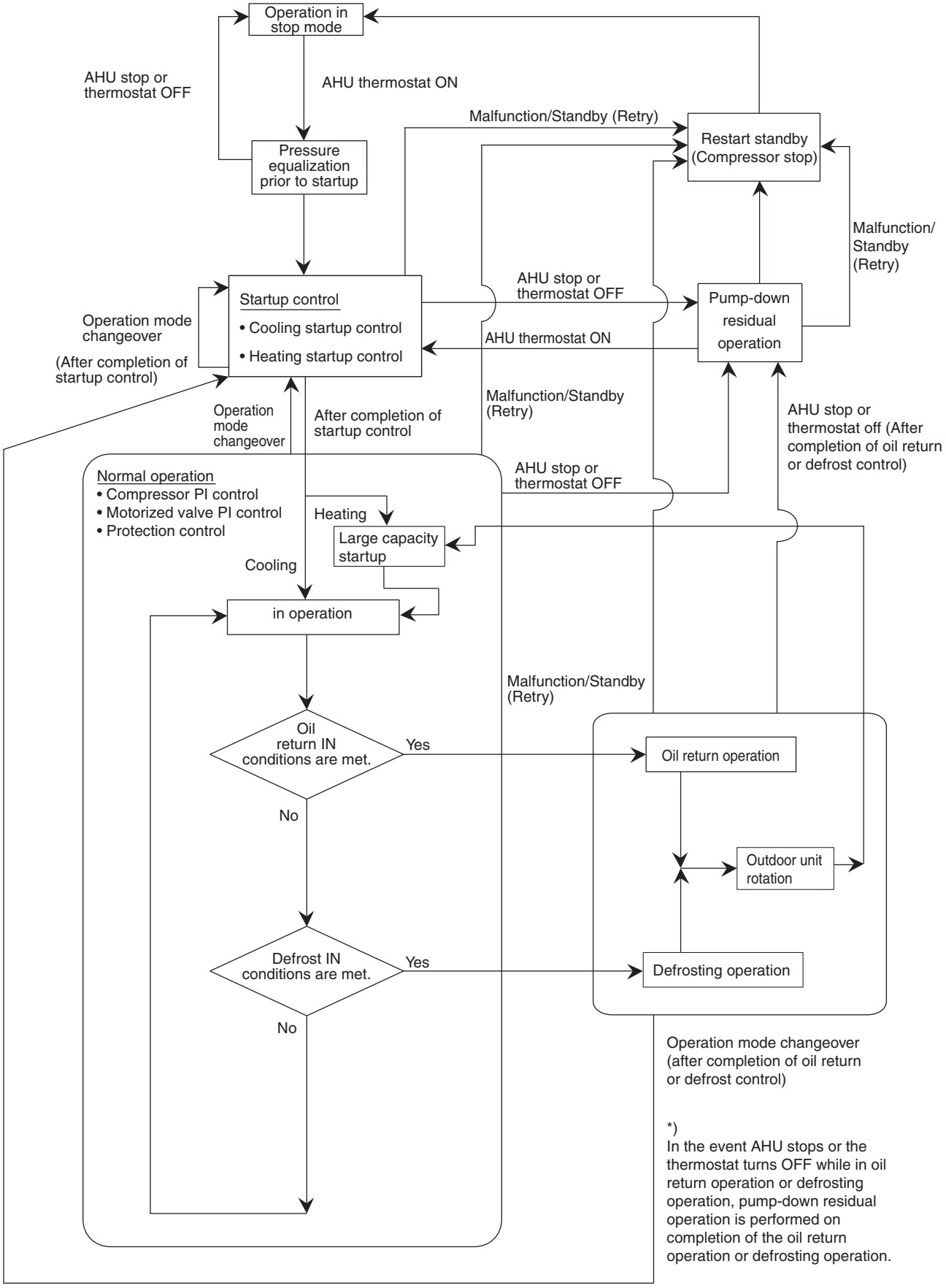

2. Basic Control

2.1 Normal Operation

2.1.1 List of Functions in Normal Operation

Part Name	Symbol	(Electric Symbol)	Function of Functional Part	
			Normal Cooling	Normal Heating
Compressor	—	(M1C, M2C)	PI control, High pressure protection, Low pressure protection, Td protection, INV protection,	PI control, High pressure protection, Low pressure protection, Td protection, INV protection,
Outdoor unit fan		(M1F)	Cooling fan control	Step 7 or 8
Four way valve	20S1	(Y1R)	OFF	ON
Main motorized valve	EV1	(Y1E)	480 pls	PI control
Subcool heat exchanger electronic expansion valve	EV2	(Y2E)	PI control	PI control
Hot gas bypass valve	SVP	(Y1S)	OFF	Energized when the system is set to low pressure control mode
Accumulator oil return valve	SV0	(Y2S)	ON	ON

AHU actuator		Normal cooling	Normal heating
Fan	Thermostat ON unit	ON	ON
	Stopping unit	OFF	OFF

2.2 Compressor PI Control

2.2.1 For Z-Control

Carries out the compressor capacity PI control to maintain Te at constant during cooling operation and Tc at constant during heating operation to ensure stable unit performance.

[Cooling operation]

Controls compressor capacity to adjust Te to achieve target value (TeS).

Te set value (Make this setting while in Setting mode 2.)

Te : Low pressure equivalent saturation temperature (°C)

TeS : Target Te value (Varies depending on Te setting, operating frequency, etc.)

Te setting

L	M (Normal) (factory setting)	H
3	6	9

[Heating operation]

Controls compressor capacity to adjust Tc to achieve target value (TcS).

Te set value (Make this setting while in Setting mode 2.)

Tc : High pressure equivalent saturation temperature (°C)

TcS : Target Tc value (Varies depending on Tc setting, operating frequency, etc.)

Tc setting

L	M (Normal) (factory setting)	H
43	46	49

2.2.2 For X-, Y-Control

See chapter “Field Setting”.

■ Compressor Step Control

Compressor operations vary with the following steps.

Stand-alone installation

ERQ 125

STEP No.	INV
1	52 Hz
2	56 Hz
3	62 Hz
4	68 Hz
5	74 Hz
6	80 Hz
7	88 Hz
8	96 Hz
9	104 Hz
10	110 Hz
11	116 Hz
12	124 Hz
13	132 Hz
14	144 Hz
15	158 Hz
16	166 Hz
17	176 Hz
18	188 Hz

ERQ 200

STEP No.	INV
1	52 Hz
2	56 Hz
3	62 Hz
4	68 Hz
5	74 Hz
6	80 Hz
7	88 Hz
8	96 Hz
9	104 Hz
10	110 Hz
11	116 Hz
12	124 Hz
13	132 Hz
14	144 Hz
15	158 Hz
16	166 Hz
17	176 Hz
18	188 Hz
19	202 Hz
20	210 Hz
21	218 Hz
22	232 Hz
23	248 Hz
24	266 Hz

ERQ 250

STEP No.	INV	STD1
1	52 Hz	OFF
2	56 Hz	OFF
3	62 Hz	OFF
4	68 Hz	OFF
5	74 Hz	OFF
6	80 Hz	OFF
7	88 Hz	OFF
8	96 Hz	OFF
9	104 Hz	OFF
10	110 Hz	OFF
11	116 Hz	OFF
12	124 Hz	OFF
13	132 Hz	OFF
14	144 Hz	OFF
15	158 Hz	OFF
16	166 Hz	OFF
17	176 Hz	OFF
18	188 Hz	OFF
19	202 Hz	OFF
20	210 Hz	OFF
21	52 Hz	ON
22	62 Hz	ON
23	68 Hz	ON
24	74 Hz	ON
25	80 Hz	ON
26	88 Hz	ON
27	96 Hz	ON
28	104 Hz	ON
29	116 Hz	ON
30	124 Hz	ON
31	132 Hz	ON
32	144 Hz	ON
33	158 Hz	ON
34	176 Hz	ON
35	188 Hz	ON
36	202 Hz	ON
37	210 Hz	ON

Notes:

1. INV : Inverter compressor
   STD1 : Standard compressor 1
2. Depending on the operating conditions of compressors, the compressors may run in patterns other than those aforementioned.

2.3 Step Control of Outdoor Unit Fans

Used to control the revolutions of outdoor unit fans in the steps listed in table below, according to condition changes.

STEP No.	Fan revolutions (rpm)		
	ERQ 125	ERQ 200	ERQ 250
0	0	0	0
1	285	350	350
2	315	370	370
3	360	400	400
4	450	450	460
5	570	540	560
6	710	670	680
7	Cooling: 951 Heating: 941	760	Cooling: 821 Heating: 800
8	Cooling: 951 Heating: 941	Cooling: 796 Heating: 780	Cooling: 821 Heating: 800

* Figures listed above are all those controlled while in standard mode, which vary when the system is set to high static pressure or capacity precedence mode.

2.4 Outdoor Unit Fan Control in Cooling Operation

While in cooling operation, if the outdoor temperature is low, this mode provides high-pressure control using the outdoor unit fan to retain appropriate liquid pressure, thus ensuring refrigerant circulation rate to be supplied to AHU.

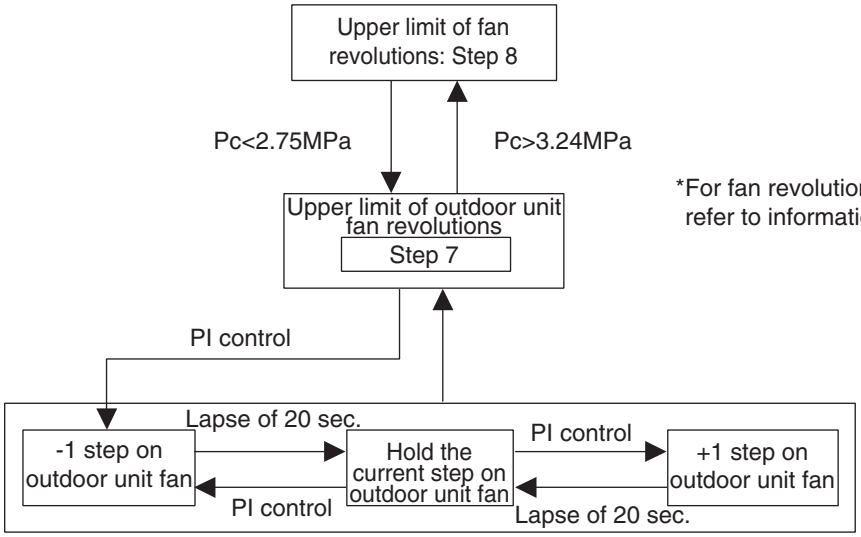

*For fan revolutions in each step, refer to information on page 107.

3. Special Control

3.1 Startup Control

This control is used to equalize the pressure in the front and back of the compressor prior to the startup of the compressor, thus reducing startup loads. Furthermore, the inverter is turned ON to charge the capacitor.
In addition, to avoid stresses to the compressor due to oil return or else after the startup, the following control is made and the position of the four way valve is also determined. To position the four way valve, the master and slave units simultaneously start up.

3.1.1 Startup Control in Cooling Operation

Thermostat ON

	Pressure equalization control prior to startup	Startup control	
		STEP1	STEP2
Compressor	0 Hz	52 Hz + OFF + OFF	124 Hz + OFF + OFF +2 steps/20 sec. (until Pc - Pe>0.39MPa is achieved)
Outdoor unit fan	STEP4	Ta<20°C: OFF Ta≥20°C: STEP4	+1 step/15 sec. (when Pc>2.16MPa) -1 step/15 sec. (when Pc<1.77MPa)
Four way valve (20S1)	Holds	OFF	OFF
Main motorized valve (EV1)	0 pls	480 pls	480 pls
Subcooling motorized valve (EV2) (RXYQ8~)	0 pls	0 pls	0 pls
Hot gas bypass valve (SVP)	OFF	OFF	OFF
Accumulator oil return valve (SVO)	OFF	OFF	OFF
Injection (SVT) (RXYQ5P model)	OFF	OFF	OFF
Ending conditions	A lapse of one minute	A lapse of 10 sec.	OR • A lapse of 130 sec. • Pc - Pe>0.39MPa

3.1.2 Startup Control in Heating Operation

Thermostat ON

	Pressure equalization control prior to startup	Startup control	
		STEP1	STEP2
Compressor	0 Hz	52 Hz + OFF + OFF	124 Hz + OFF + OFF +2 steps/20 sec. (until Pc - Pe>0.39MPa is achieved)
Outdoor unit fan	STEP4	STEP8	STEP8
Four way valve	Holds	ON	ON
Main motorized valve (EV1)	0 pls	0 pls	0 pls
Subcooling motorized valve (EV2) (RXYQ8~)	0 pls	0 pls	0 pls
Hot gas bypass valve (SVP)	OFF	OFF	OFF
Accumulator oil return valve (SVO)	OFF	OFF	OFF
Injection (SVT) (RXYQ5P model)	OFF	OFF	OFF
Ending conditions	A lapse of one minute	A lapse of 10 sec.	OR • A lapse of 130 sec. • Pc>2.70MPa • Pc-Pe>0.39MPa

3.2 Oil Return Operation

In order to prevent the compressor from running out of oil, the oil return operation is conducted to recover oil flown out from the compressor to the system side.

3.2.1 Oil Return Operation in Cooling Operation

[Start conditions]

Referring to the set conditions for the following items, start the oil return operation in cooling.

- Cumulative oil feed rate
- Timer setting (Make this setting so as to start the oil return operation when the initial cumulative operating time reaches two hours after power supply is turned ON and then every eight hours.)

Furthermore, the cumulative oil feed rate is computed from Tc, Te, and compressor loads.

Outdoor unit actuator	Oil return preparation operation	Oil return operation	Post-oil-return operation
Compressor	Take the current step as the upper limit.	5 HP: 52 Hz (→ Low pressure constant control) Other model: 52 Hz + ON + ON (→ Low pressure constant control) ↓ Maintain number of compressors in oil return preparation operation ON	Same as the “oil return operation” mode.
Outdoor unit fan	Fan control (Normal cooling)	Fan control (Normal cooling)	Fan control (Normal cooling)
Four way valve	OFF	OFF	OFF
Main motorized valve (EV1)	480 pls	480 pls	480 pls
Subcooling motorized valve (EV2)	SH control	0 pls	0 pls
Hot gas bypass valve (SVP)	OFF	OFF	OFF
Accumulator oil return valve (SVO)	ON	ON	ON
Ending conditions	20 sec.	or • 3 min. • Ts - Te<5°C	or • 3 min. • Pe<0.6MPa • HTdi>110°C

AHU actuator		Cooling oil return operation
Fan	Thermostat ON unit	ON
	Stopping unit	OFF

3.2.2 Oil Return Operation in Heating Operation

Outdoor Unit Actuator	Oil return preparation operation	Oil return operation	Post-oil-return operation
Compressor	Upper limit control	176 Hz + ON + ON	124 Hz + OFF + OFF 2-steps increase/20sec. till Pc - Pe>0.4 MPa
Outdoor unit fan	STEP7 or STEP8	OFF	STEP8
Four way valve	ON	OFF	ON
Main motorized valve (EV1)	SH control → 480 pls	480 pls	55 pls
Subcooling motorized valve (EV2)	SH control	0 pls	0 pls
Hot gas bypass valve (SVP)	OFF	OFF	OFF
Accumulator oil return valve (SVO)	ON	ON	ON
Injection (SVT) (RXYQ5P model only)	OFF	OFF	OFF
Ending conditions	170 sec.	or • 4 min. • Ts - Te<5°C	or • 10 sec. • Pc - Pe>0.4MPa

AHU actuator		Heating oil return operation
Fan	Thermostat ON unit	Field setting
	Stopping unit	OFF

3.3 Defrosting Operation

To defrost the outdoor unit heat exchanger while in Evaporator, the defrost operation is conducted to recover the heating capacity.

[Start conditions]

Referring to the set conditions for the following items, start the defrosting operation.

• Heat transfer coefficient of the outdoor unit heat exchanger
• Heat exchange temperature (Tb)
• Timer (Set to two hours at minimum.)

Furthermore, the heat transfer coefficient of the outdoor unit Evaporator is computed from Tc, Te, and compressor loads.

Outdoor unit actuator	Defrost preparation operation	Defrost operation	Post Defrost operation
Compressor	Upper limit control	176 Hz + ON + ON	124 Hz + OFF + OFF 2-steps increase/20sec. till Pc - Pe>0.4 MPa
Outdoor unit fan	STEP7 or STEP8	OFF	STEP8
Four way valve	ON	OFF	ON
Main motorized valve (EV1)	SH control → 480 pls	480 pls	55 pls
Subcooling motorized valve (EV2)	0 pls	0 pls	0 pls
Hot gas bypass valve (SVP)	OFF	OFF	OFF
Accumulator oil return valve (SVO)	ON	ON	ON
Injection (SVT) (RXYQ5P model only)	OFF	OFF	OFF
Ending conditions	170 sec.	or • 10 min. • Tb>11°C	or • 10 sec. • Pc - Pe>0.4MPa

* In the case of multi-outdoor-unit system,
Master unit: Performs the operations listed in the table above.
Slave units: Operating units perform the operations listed in the table above.
Non-operating units perform the operations listed in the table above from the Defrost operation.
(Non-operating unit stops during “Defrost preparation operation”.)

* Actuators are based on RXYQ14~18P.

AHU actuator		During defrost
Fan	Thermostat ON unit	Field setting
	Stopping unit	OFF

3.4 Pump-down Residual Operation

3.4.1 Pump-down Residual Operation in Cooling Operation

If the liquid refrigerant stays in the Evaporator at the startup of a compressor, this liquid refrigerant enters the compressor, thus resulting in diluted oil in the compressor and then degraded lubrication performance. Consequently, in order to recover the refrigerant in the Evaporator while the compressor stops, the pump-down residual operation is conducted.

Actuator	Master unit operation
Compressor	124 Hz + OFF + OFF
Outdoor unit fan	Fan control
Four way valve	OFF
Main motorized valve (EV1)	480 pls
Subcooling motorized valve (EV2)	0 pls
Hot gas bypass valve (SVP)	OFF
Accumulator oil return valve (SVO)	ON
Ending conditions	5 min.

3.4.2 Pump-down Residual Operation in Heating Operation

Actuator	Master unit operation
Compressor	124 Hz + OFF + OFF
Outdoor unit fan	STEP7
Four way valve	ON
Main motorized valve (EV1)	0 pls
Subcooling motorized valve (EV2)	0 pls
Hot gas bypass valve (SVP)	OFF
Accumulator oil return valve (SVO)	ON
Ending conditions	3 min.

3.5 Standby

3.5.1 Restart Standby

Used to forcedly stop the compressor for a period of 3 minutes, in order to prevent the frequent ON/OFF of the compressor and equalize the pressure within the refrigerant system.

Actuator	Operation
Compressor	OFF
Outdoor unit fan	Ta>30°C: STEP4 Ta≤ 30°C: OFF
Four way valve	Holds
Main motorized valve (EV1)	0 pls
Subcooling motorized (EV2)	0 pls
Hot gas bypass valve (SVP)	OFF
Accumulator oil return valve (SVO)	OFF
Injection (SVT) (ERQ 125 A7W1B model)	OFF
Ending conditions	3 min.

3.5.2 Crankcase Heater Control

In order to prevent the refrigerant from melting in the compressor oil in the stopped mode, this mode is used to control the crankcase heater.

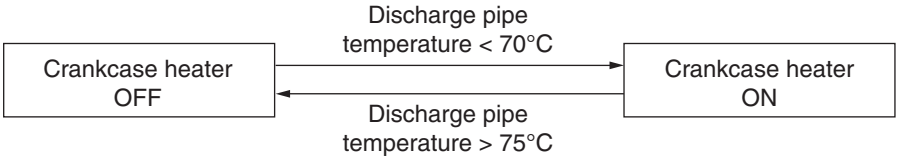

3.6 Stopping Operation

3.6.1 When System is in Stop Mode (Normal operation stop)

This mode is used to define actuator operations when the system stops.

Actuator	Operation
Compressor	OFF
Outdoor unit fan	OFF
Four way valve	Holds
Main motorized valve (EV1)	0 pls
Subcooling motorized valve (EV2)	0 pls
Hot gas bypass valve (SVP)	OFF
Accumulator oil return valve (SVO)	OFF
Injection (SVT) (ERQ 125 model only)	OFF
Ending conditions	AHU thermostat is turned ON.

3.6.2 Stop due to Malfunction

In order to protect compressors, if any of the following items has an abnormal value, the system will make "stop with thermostat OFF" and the malfunction will be determined according to the number of retry times.

Item	Judgment Criteria	Malfunction Code
1. Abnormal low pressure level	0.07MPa	E4
2. Abnormal high pressure level	4.0MPa	E3
3. Abnormal discharge pipe temperature level	135°C	F3
4. Abnormal power supply voltage	Reverse-phase power supply	U1
5. Abnormal inverter current level	16.1A: 260 sec.	L8
6. Abnormal radiator fin temperature level	93°C	L4

4. Protection Control

4.1 High Pressure Protection Control

This high pressure protection control is used to prevent the activation of protection devices due to abnormal increase of high pressure and to protect compressors against the transient increase of high pressure.

[In cooling operation]

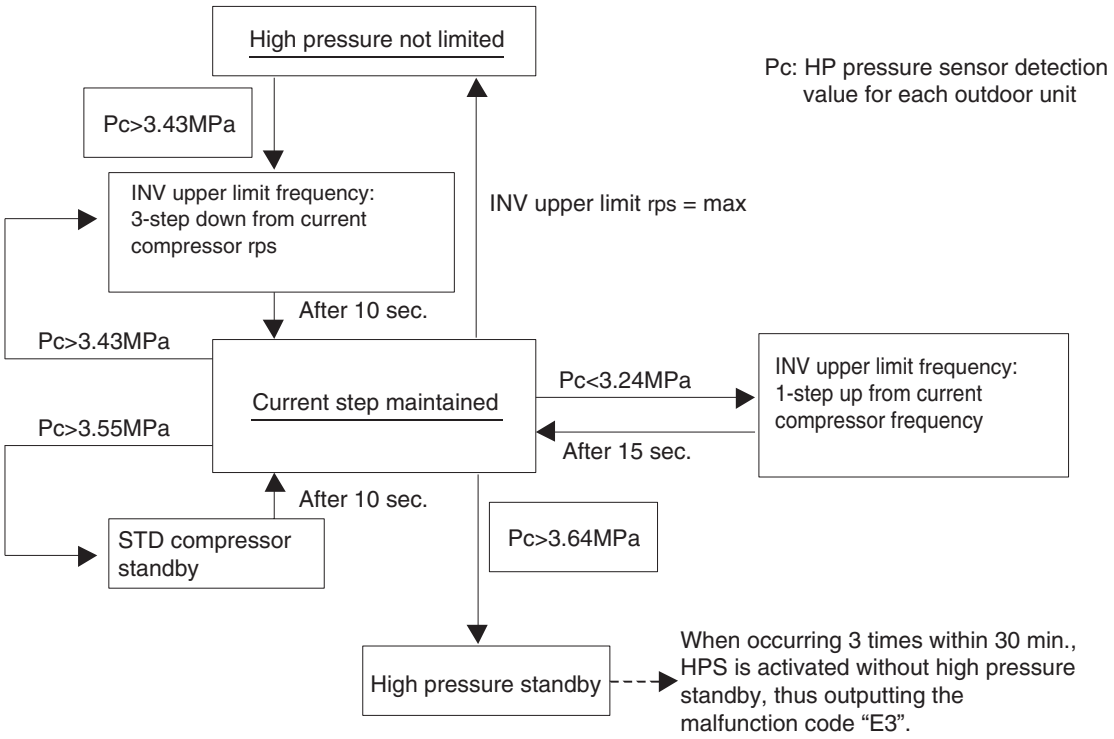

[In heating operation]

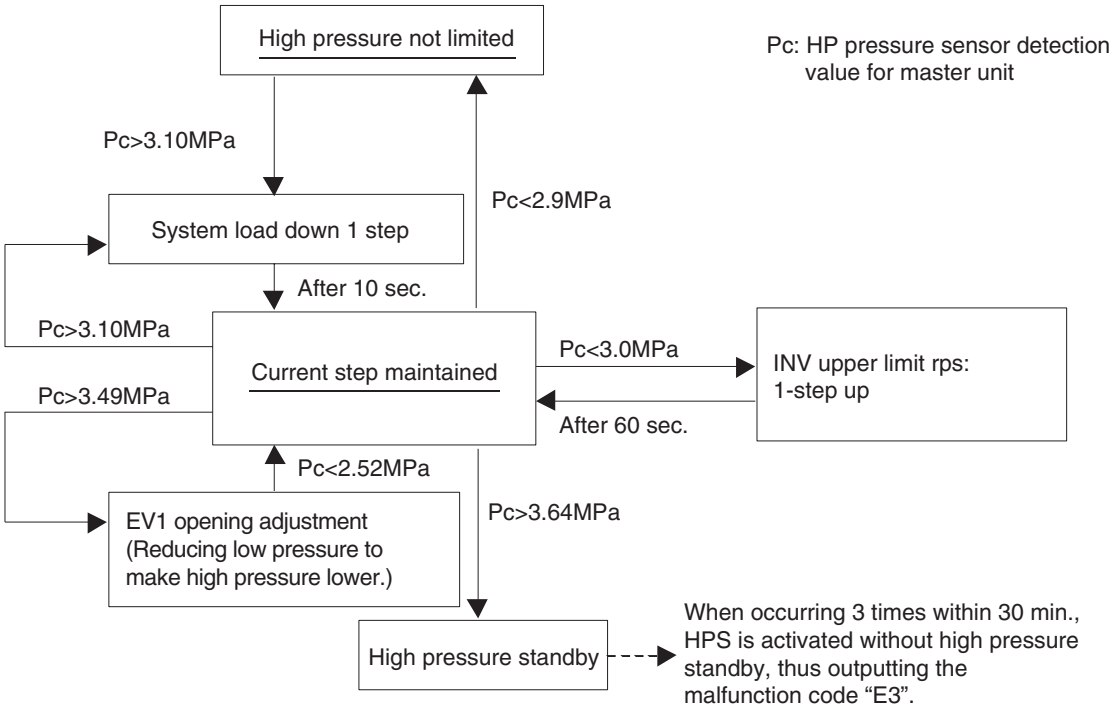

4.2 Low Pressure Protection Control

This low pressure protection control is used to protect compressors against the transient decrease of low pressure.

[In cooling operation]

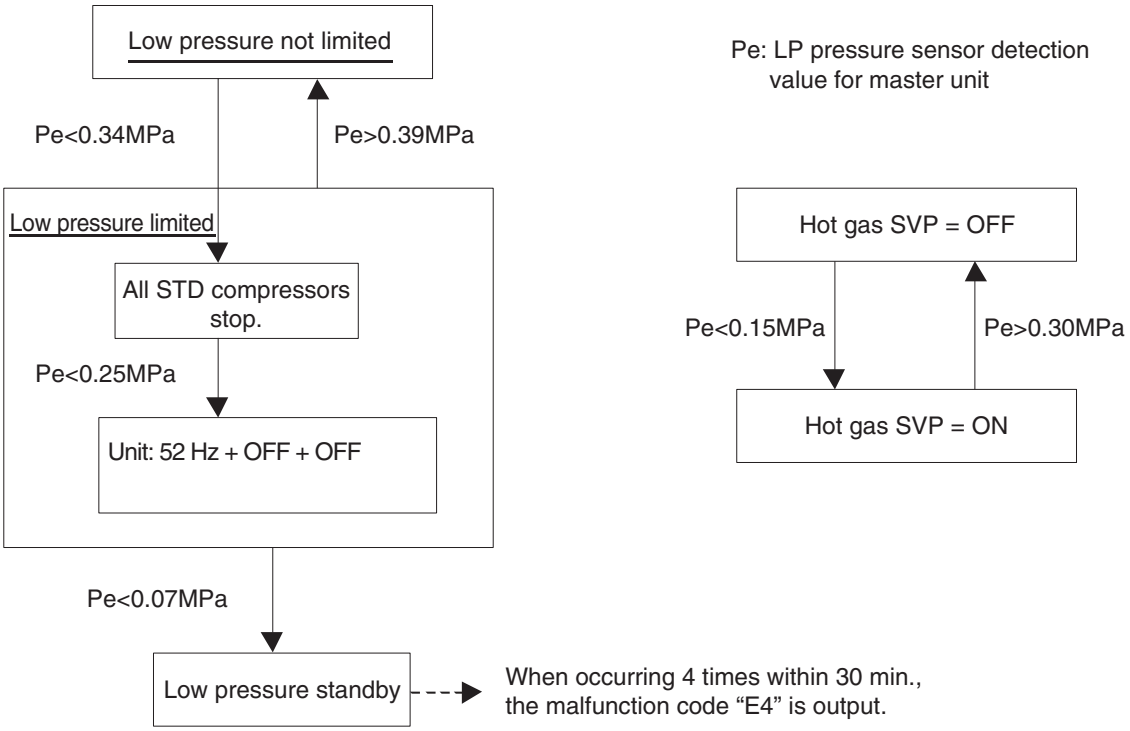

[In heating operation]

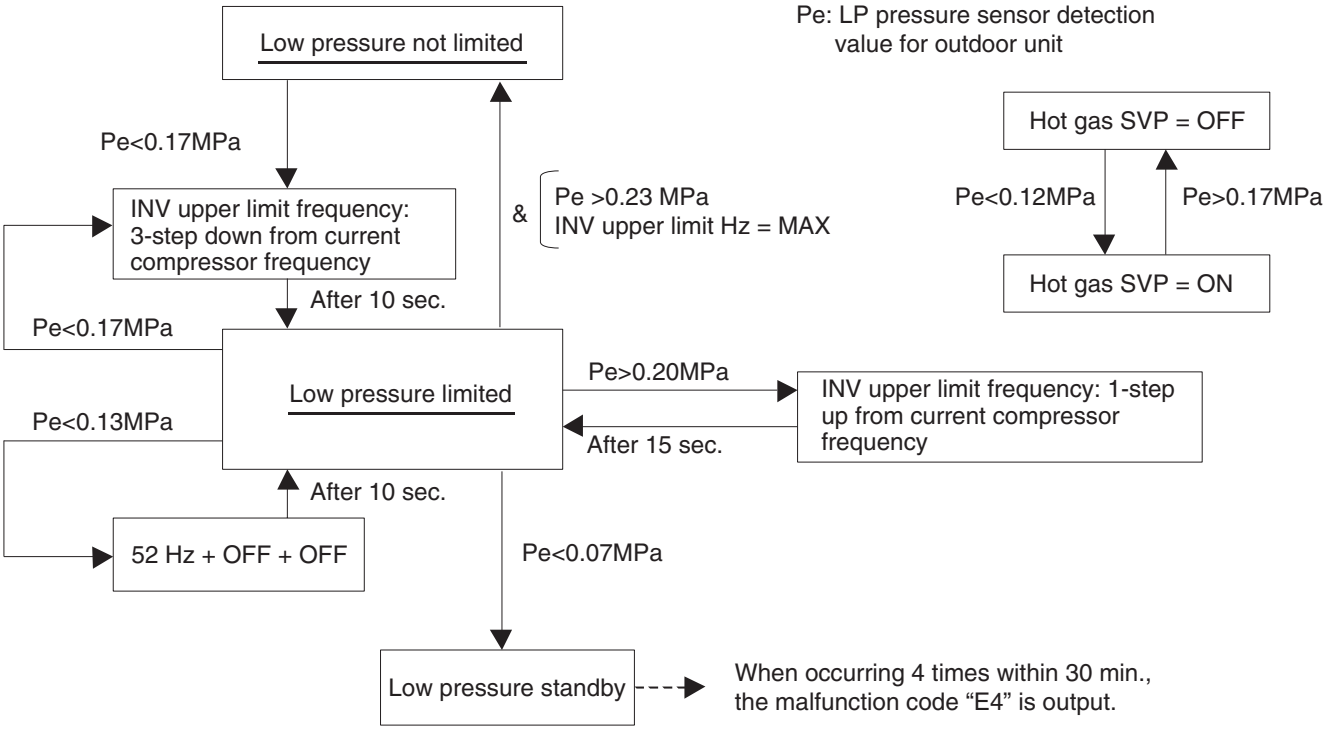

4.3 Discharge Pipe Protection Control

This discharge pipe protection control is used to protect the compressor internal temperature against a malfunction or transient increase of discharge pipe temperature.

[INV compressor]

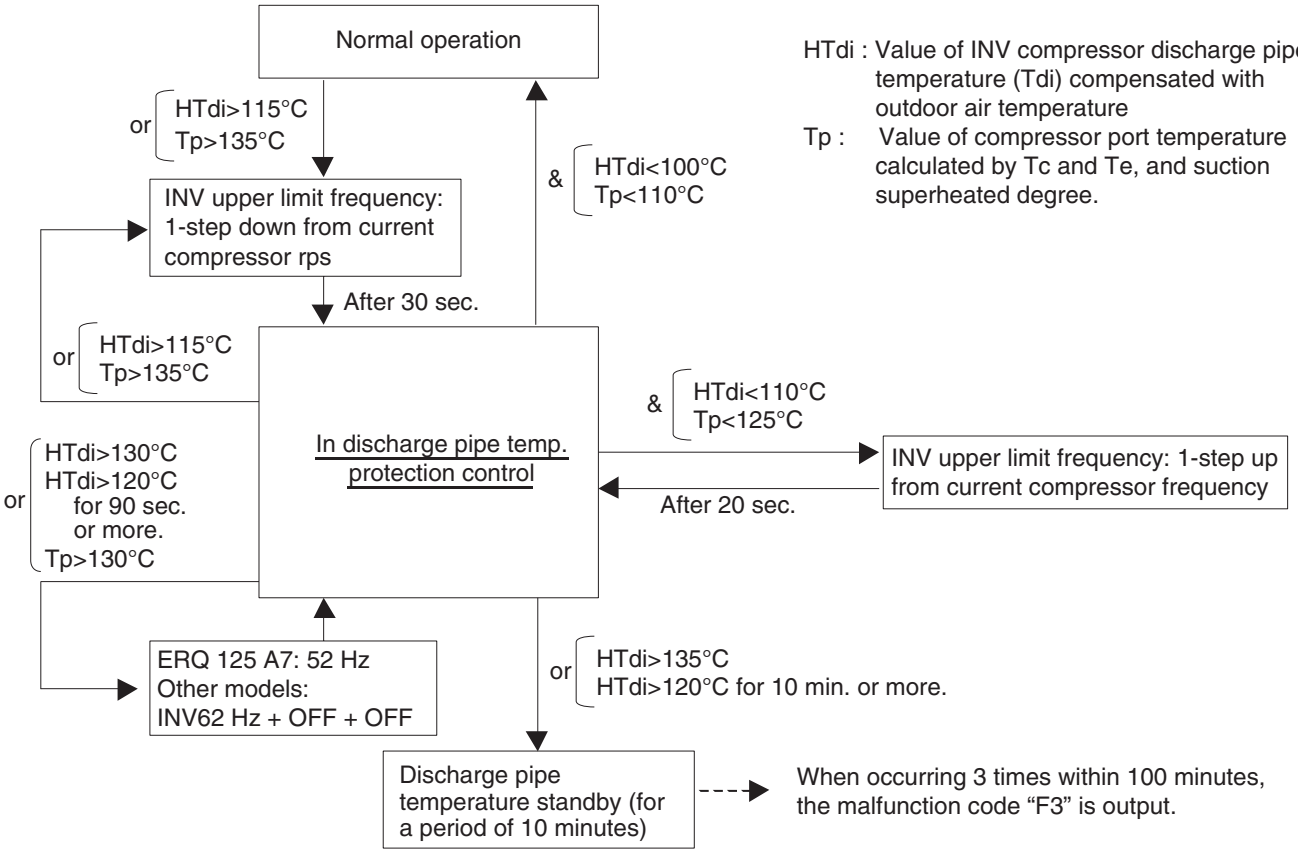

[STD compressor]

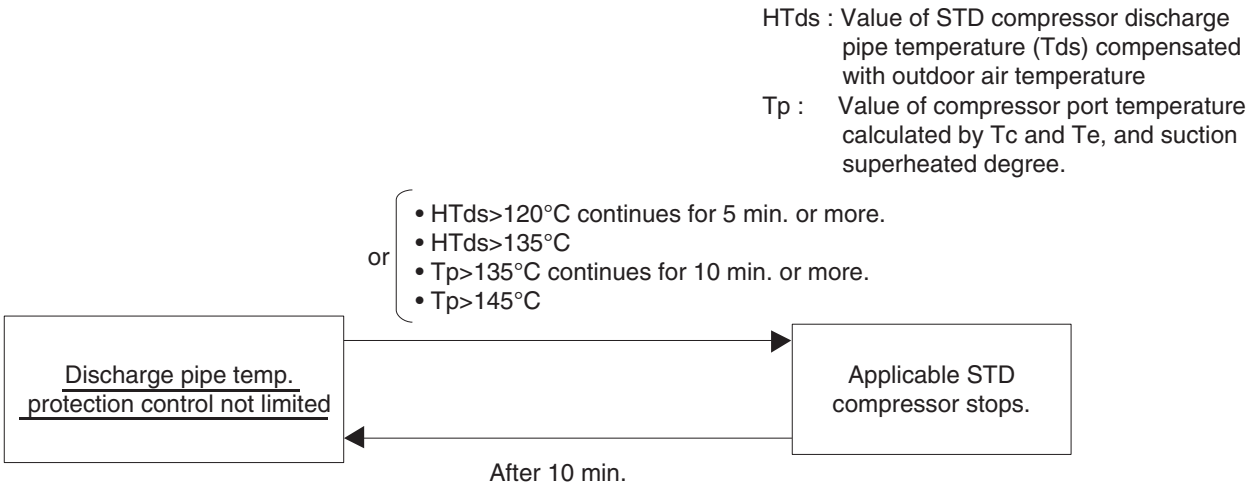

4.4 Inverter Protection Control

Inverter current protection control and inverter fin temperature control are performed to prevent tripping due to a malfunction, or transient inverter overcurrent, and fin temperature increase.

[Inverter overcurrent protection control]

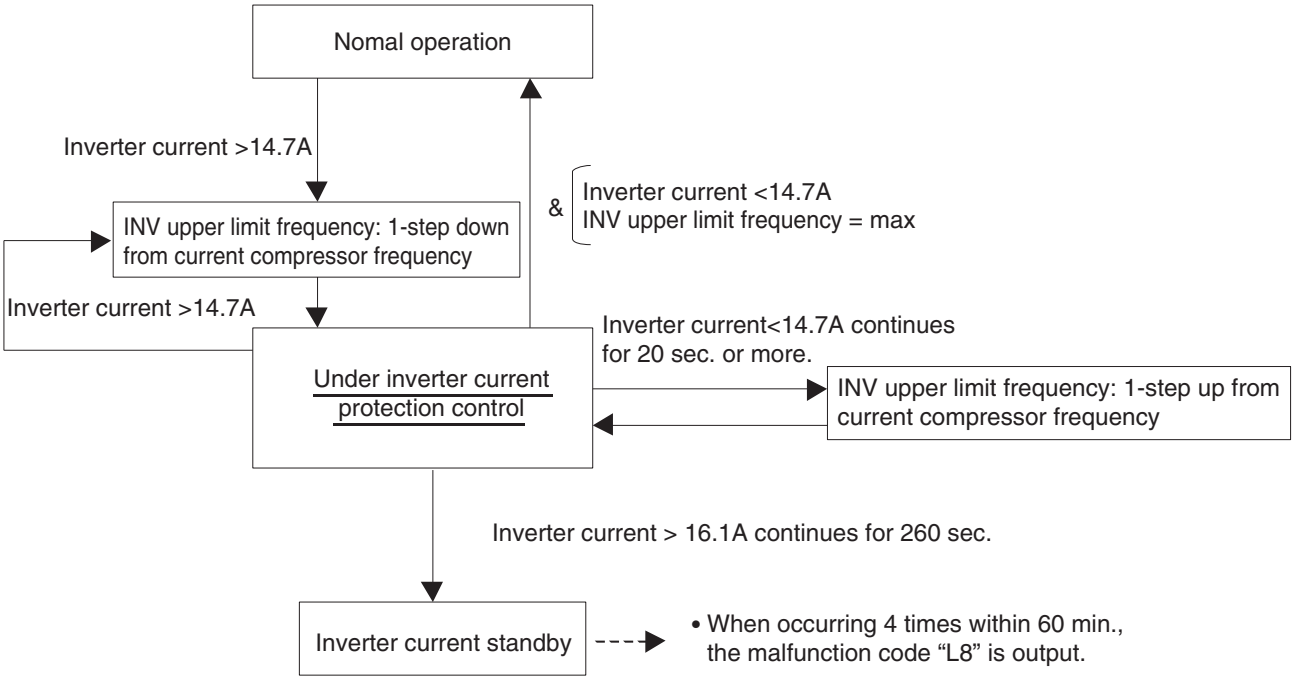

[Inverter fin temperature control]

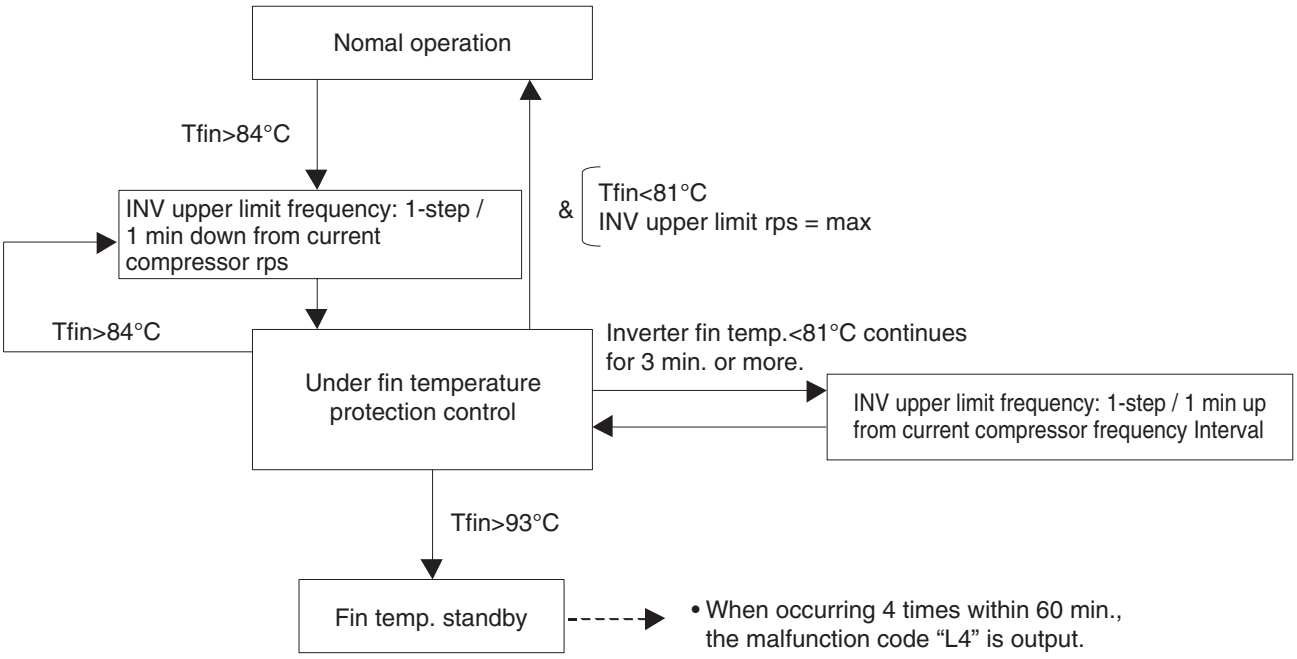

4.5 STD Compressor Overload Protection

This control is used to prevent abnormal heating due to overcurrent to the compressor resulting from failures of STD compressor such as locking.

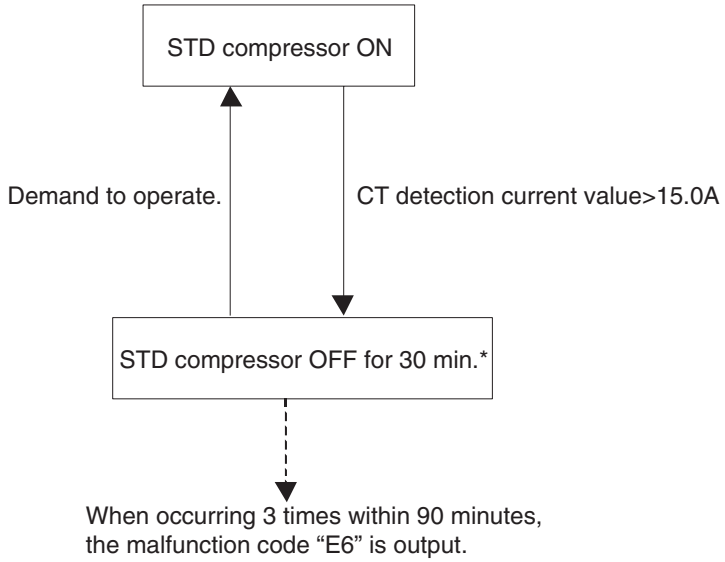

*If the power supply is reset while in operation prohibition mode, the prohibition timer will continue counting when the power supply is turned ON.

4.6 Injection Control (only for ERQ 125 A7W1B)

For transitional rise in discharge pipe temperature, have the liquid refrigerant flow into the suction side to reduce the discharge pipe temperature for the compressor protection.

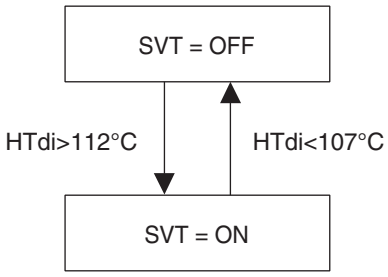

HTdi: Correction value of the discharge pipe temperature on the INV compressor.

5. Other Control

5.1 Emergency Operation (only for ERQ 250 A7W1B)

If the compressor cannot operate, this control inhibits any applicable compressor or outdoor unit from operating to perform emergency operation only with the operative compressor or outdoor unit.

Caution

In order to disable the compressor operation due to a failure or else, be sure to do so in emergency operation mode.
NEVER attempt to disconnect power supply wires from magnetic contactors or else. (Doing so will operate compressors in combination that disables oil equalization between the compressors, thus resulting in malfunctions of other normal compressors.)

5.1.1 Restrictions for Emergency Operation

- In the case of system with 1 outdoor unit installed, only when thermostats of AHUs having a capacity of 50% or more of the outdoor unit capacity turn ON, the emergency operation is functional. (If the total capacity of units with thermostat ON is small, the outdoor unit cannot operate.)
- If the emergency operation is set while the outdoor unit is in operation, the outdoor unit stops once after pump-down residual operation (a maximum of 5 minutes elapsed).

5.1.2 Principle

[Set the system to operation prohibition mode by compressor]

- In order to set an INV compressor to operation prohibition mode, set No. 42 of Setting mode 2 to "EMERGENCY OPERATION".

LED display (○:ON ●:OFF ◑:Blink)
H1P — — — — H7P

(Procedure)
(1) Press and hold the MODE button (BS1) for a period of 5 seconds or more. ○●●●●●●
(2) Press the SET button (BS2) 42 times. ○○●○●○● (Factory set)
(3) Press the RETURN button (BS3) once. ○●●●●●◑
(4) Press the SET button (BS2) once. ○●●●●◑●
(5) Press the RETURN button (BS3) twice. ○●●●●●●
(6) Press the MODE button (BS1) once. ●●○●●●●

- In order to set STD1 compressor to operation prohibition mode, set No. 19 of Setting mode 2 to "STD1 OPERATION PROHIBITION". (ERQ 250 A7W1B)

LED display (○:ON ●:OFF ◑:Blink)
H1P — — — — H7P

(Procedure)
(1) Press and hold the MODE button (BS1) for a period of 5 seconds or more. ○●●●●●●
(2) Press the SET button (BS2) 19 times. ○●○●●○○
(3) Press the RETURN button (BS3) once. ○●●●●●● (Factory set)
(4) Press the SET button (BS2) once. ○●●●●◑●
(5) Press the RETURN button (BS3) twice. ○●●●●●●
(6) Press the MODE button (BS1) once. ●●○●●●●

5.2 Demand Operation

In order to save the power consumption, the capacity of outdoor unit is saved with control forcibly by using “Demand 1 Setting” or “Demand 2 Setting”.
To operate the unit with this mode, additional setting of “Continuous Demand Setting” or external input by external control adapter is required.

Set item	Condition	Content
Demand 1	Mode 1	The compressor operates at approx. 60% or less of rating.
	Mode 2	The compressor operates at approx. 70% or less of rating.
	Mode 3	The compressor operates at approx. 80% or less of rating.
Demand 2	—	The compressor operates at approx. 40% or less of rating.

5.3 Heating Operation Prohibition

Heating operation is prohibited above 24°C ambient temperature.

6. Outline of Control

6.1 Thermostat Sensor in Remote Control (only for Z-control)

Temperature is controlled by both the thermostat sensor in remote control and air suction thermostat in the AHU. (This is however limited to when the field setting for the thermostat sensor in remote control is set to “Use.”)

Cooling

If there is a significant difference in the preset temperature and the suction temperature, fine adjustment control is carried out using a body thermostat sensor, or using the sensor in the remote control near the position of the user when the suction temperature is near the preset temperature.

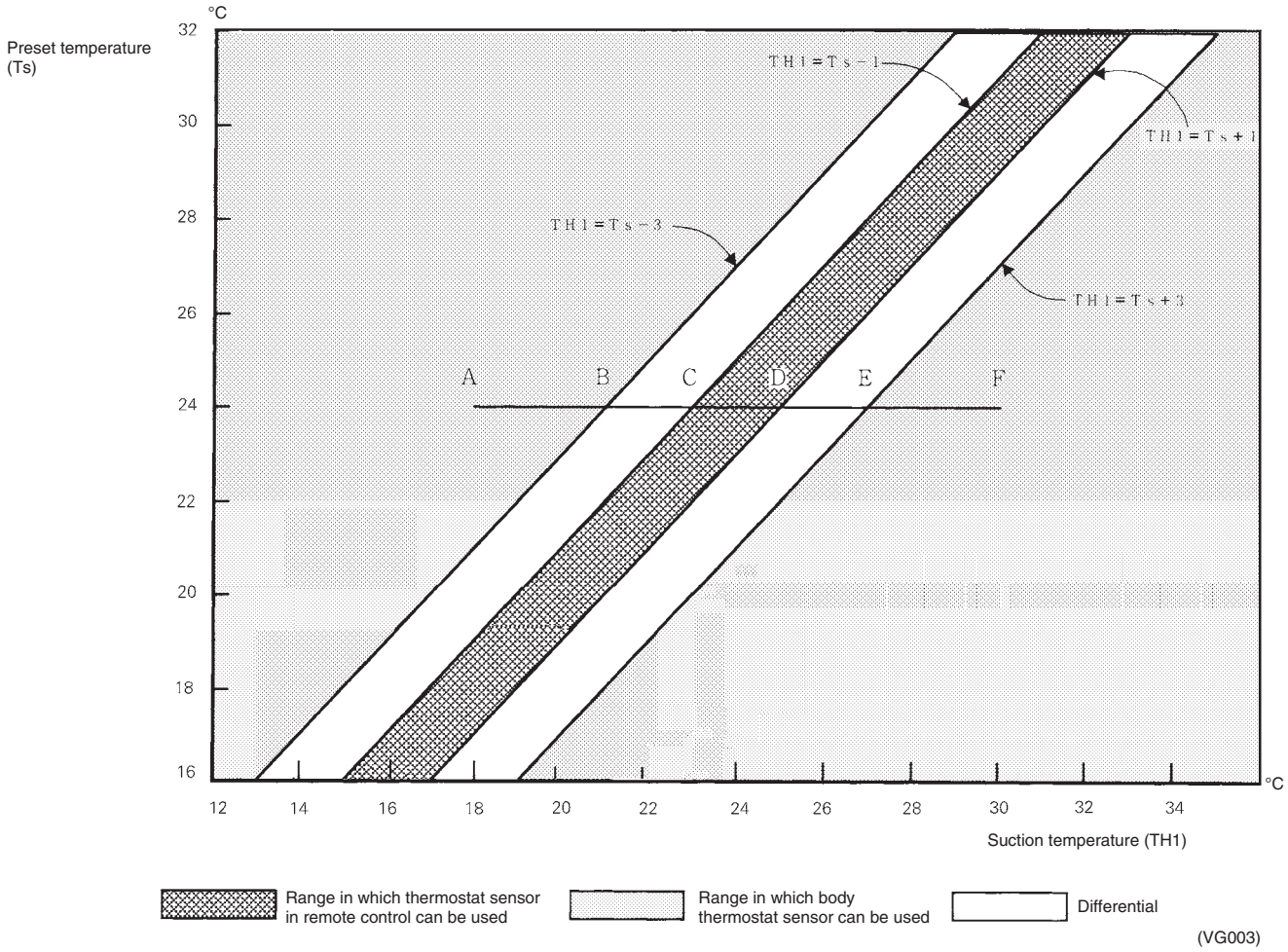

■ **Ex: When cooling**

Assuming the preset temperature in the figure above is 24°C, and the suction temperature has changed from 18°C to 30°C (A → F):

Body thermostat sensor is used for temperatures from 18°C to 23°C (A → C).
Remote control thermostat sensor is used for temperatures from 23°C to 27°C (C → E).
Body thermostat sensor is used for temperatures from 27°C to 30°C (E → F).

And, assuming suction temperature has changed from 30°C to 18°C (F → A):

Body thermostat sensor is used for temperatures from 30°C to 25°C (F → D).
Remote control thermostat sensor is used for temperatures from 25°C to 21°C (D → B).
Body thermostat sensor is used for temperatures from 21°C to 18°C (B → A).

Heating

When heating, the hot air rises to the top of the room, resulting in the temperature being lower near the floor where the occupants are. When controlling by body thermostat sensor only, the unit may therefore be turned off by the thermostat before the lower part of the room reaches the preset temperature. The temperature can be controlled so the lower part of the room where the occupants are doesn't become cold by widening the range in which thermostat sensor in remote control can be used so that suction temperature is higher than the preset temperature.

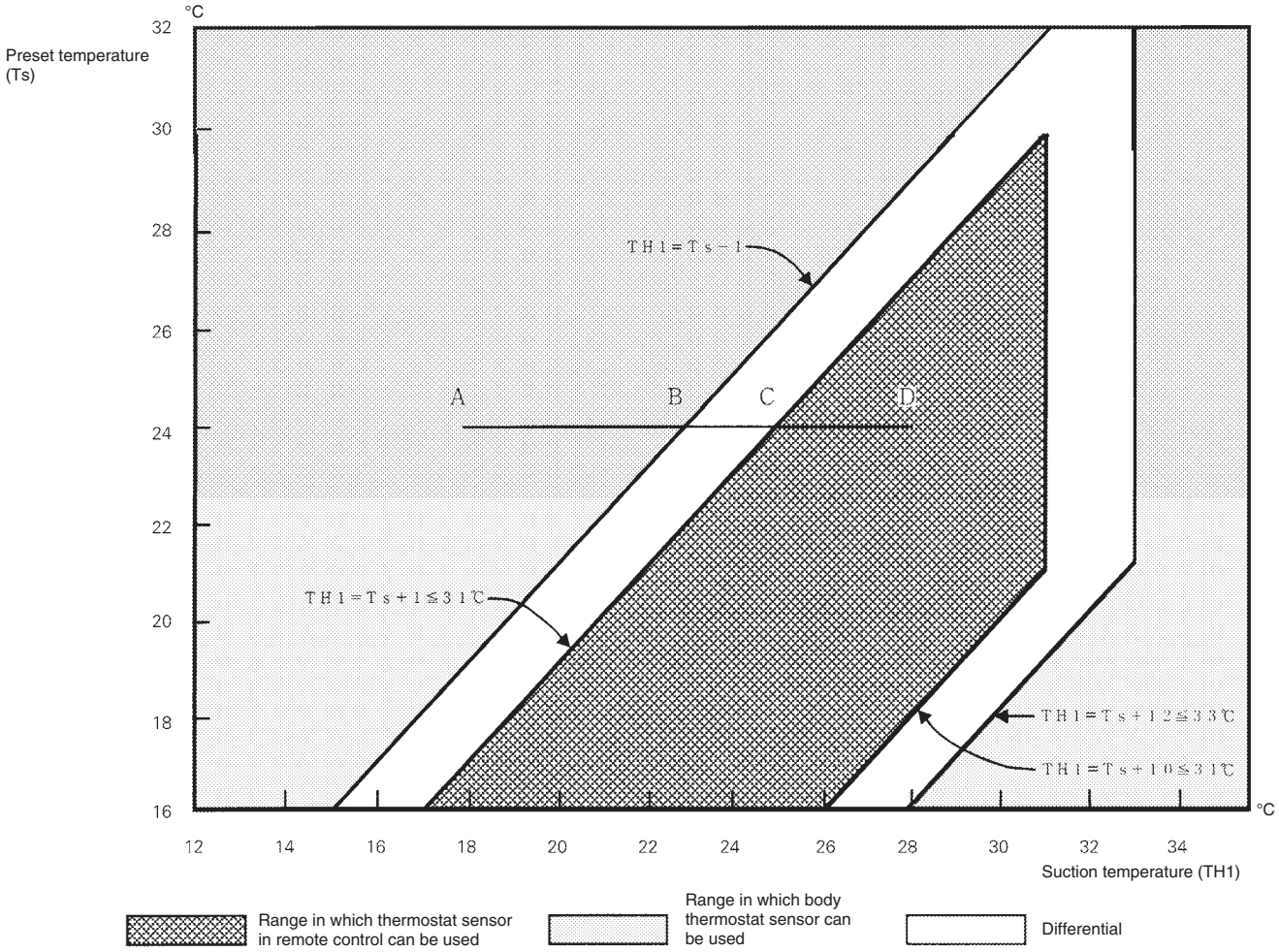

(V2769)

- **Ex: When heating Assuming the preset temperature in the figure above is 24°C, and the suction temperature has changed from 18°C to 28°C (A → D):**

Body thermostat sensor is used for temperatures from 18°C to 25°C (A → C).
Remote control thermostat sensor is used for temperatures from 25°C to 28°C (C → D).

And, assuming suction temperature has changed from 28°C to 18°C (D → A):
Remote control thermostat sensor is used for temperatures from 28°C to 23°C (D → B).
Body thermostat sensor is used for temperatures from 23°C to 18°C (B → A).

6.2 Hot Start Control (In Heating Operation Only)

At startup with thermostat ON or after the completion of defrosting in heating operation, the AHU fan is controlled to prevent cold air from blasting out and ensure startup capacity.
[Detail of operation]
For more information refer to the chapter "Field Setting".

6.3 Freeze Prevention

Freeze Prevention by Off Cycle (AHU)

When the temperature detected by liquid pipe temperature thermistor (R2T) of the AHU heat exchanger drops too low, the unit enters freeze prevention operation in accordance with the following conditions, and is also set in accordance with the conditions given below.

Conditions for starting freeze prevention: Temperature is -1°C or less for total of 40 min., or temperature is -5°C or less for total of 10 min.
Conditions for stopping freeze prevention: Temperature is +7°C or more for 10 min. continuously

Ex: Case where temperature is -5°C or less for total of 10 min.

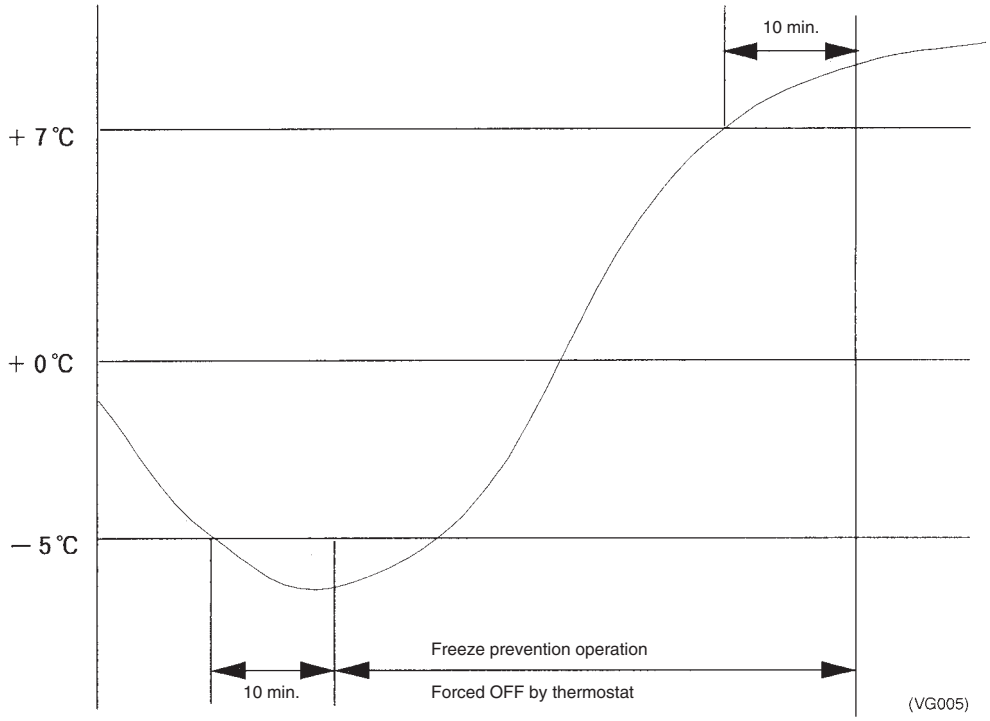

6.4 Low Outdoor Air Temperature Protection Control

Objective

In cooling (or fan operation) or heating, if outdoor air is low in temperature, stop the fan forcibly.

Details

[Cooling and fan operation]
Turn OFF the fan for a period of 60 minutes at a suction temperature of 5°C or lower.
In order to monitor the outdoor air temperature, however, turn ON the fan for a period of one minute and turn OFF the fan again at a temperature of 5°C or lower after the said timer completes the operative period.
Reset the 60-minute timer when the fan stops running.

[Heating]
Turn OFF the fan for a period of 60 minutes at a suction temperature of –5°C or lower.
In order to monitor the outdoor air temperature, however, turn ON the fan for a period of one minute and turn OFF the fan again at a temperature of –5°C or lower after the said timer completes the operative period.
Reset the 60-minute timer when the fan stops running.
* The thermostat will not turn ON in one minute due to the temperature while the fan stops.

- This control shall be disabled at test run both in cooling and heating. (The test run shall be conducted first.)

Part 5
Control Box EKEQ - CBV3

1. Different Systems with their Control Boxes 50
   1.1 System A: PAIR 50
   1.2 System B: MULTI 52
2. X, Y, Z Control 55
   2.1 X-Control 55
   2.2 Y-Control 56
   2.3 Z-Control 57
3. Wiring Diagram of Control Box 58
   3.1 D-box 58
   3.2 F-box 59
4. Attention Points 60
5. System A: EKEQF & EKEQD-box: Installation and Operation Manual 61
6. System B: EKEQM-box: Installation and Operation Manual 76

1. Different Systems with their Control Boxes

For steering a field supply AHU by an outdoor inverter heat pump, 2 systems can be used:

- System A: PAIR application (ERQ-outdoor)
- System B: MULTI application (VRV-outdoor)

1.1 System A: PAIR

System A = PAIR : ERQ + EXV-Kit

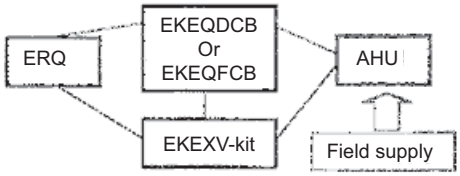

Pair application here means 1 outdoor unit + 1 AHU.
In pair application, there's the choice between 2 control boxes: EKEQD or EKEQF.

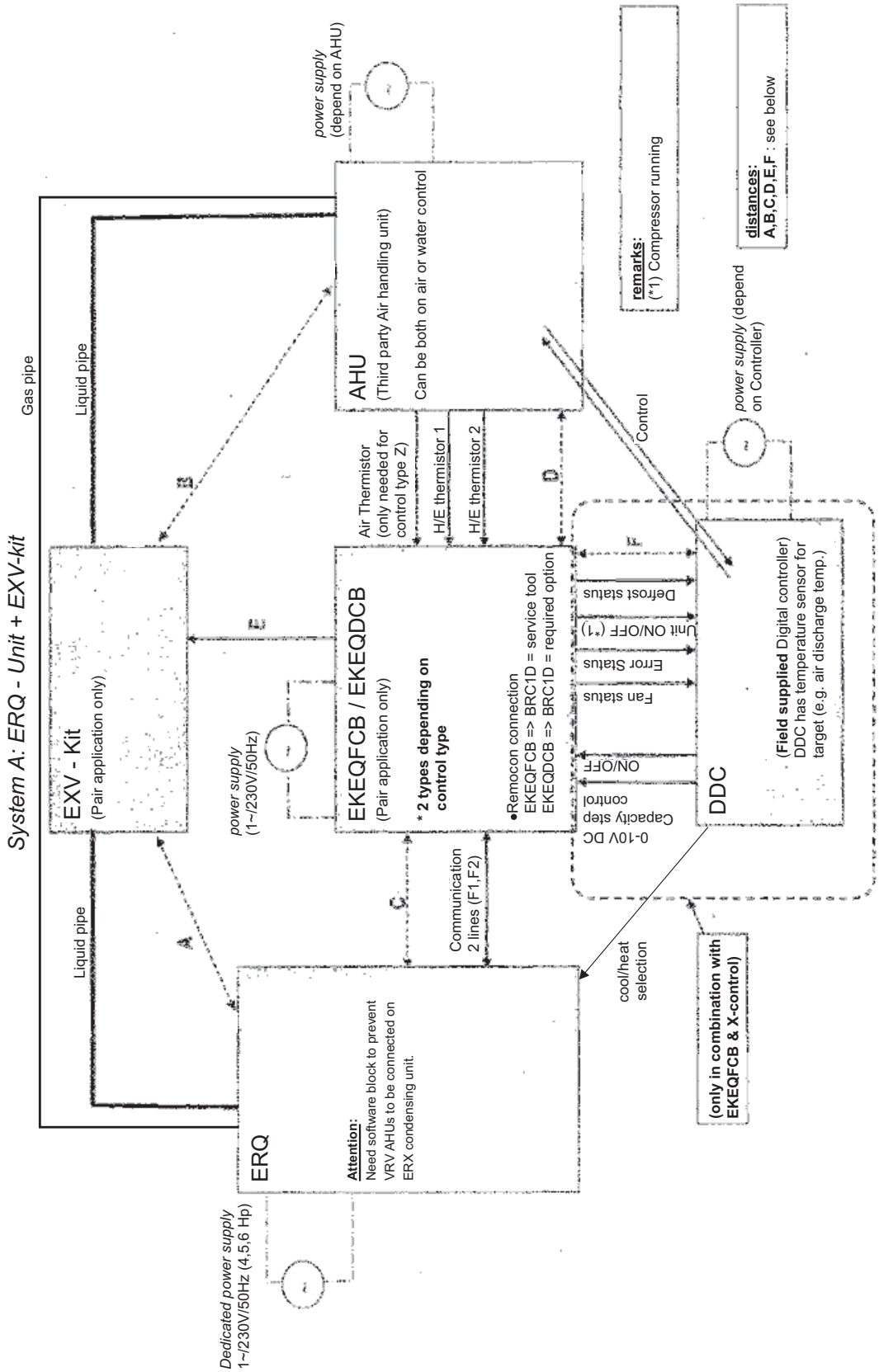
System A: ERQ - Unit + EXV-kit
Gas pipe
Liquid pipe
Liquid pipe
EXV - Kit
(Pair application only)
power supply
(depend on AHU)
AHU
(Third party Air handling unit)
Can be both on air or water control
Air Thermistor
(only needed for
control type Z)
H/E thermistor 1
H/E thermistor 2
power supply
(1~/230V/50Hz)
EKEQFCB / EKEQDCB
(Pair application only)
* 2 types depending on
control type
•Remocon connection
EKEQFCB => BRC1D = service tool
EKEQDCB => BRC1D = required option
Control
Defrost status
Unit ON/OFF (*1)
Error Status
Fan status
ON/OFF
0-10V DC
Capacity step
control
DDC
(Field supplied Digital controller)
DDC has temperature sensor for
target (e.g. air discharge temp.)
power supply (depend
on Controller)
remarks:
(*1) Compressor running
distances:
A,B,C,D,E,F : see below
Communication
2 lines (F1,F2)
cool/heat
selection
(only in combination with
EKEQFCB & X-control)
ERQ
Attention:
Need software block to prevent
VRV AHUs to be connected on
ERX condensing unit.
Dedicated power supply
1~/230V/50Hz (4,5,6 Hp)
A
B
C
D
E
F

Allowable lengths and heights

System A:

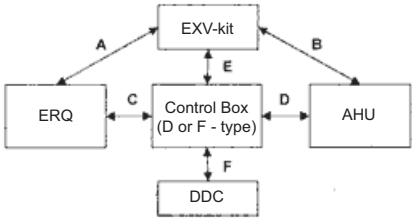

Allowable height:

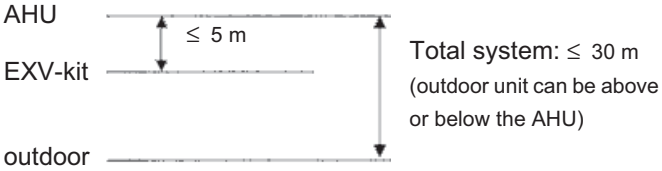

		Piping		Communication			
		A	B	C	D	E	F
ERQ 3 phase	125	length: 5 < A ≤ 50 m	length: ≤ 5 m	≤ 100 m	≤ 20 m	≤ 20 m	depend on DDC
	200						
	250						

1.2 System B: MULTI

Only for combining VRV + AHU + indoors. No ERQ!

System B = MULTI (suction control) : VRV + EXV-Kit

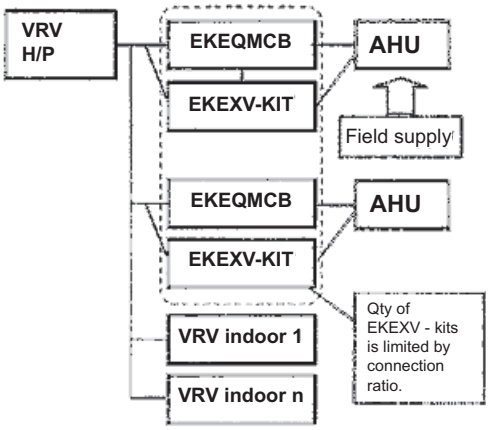

Multi application with VRV means the ability to combine 1 outdoor unit + several AHU, as well as VRV indoors (minimum 1 is required). The required control box for this application is EKEQM.

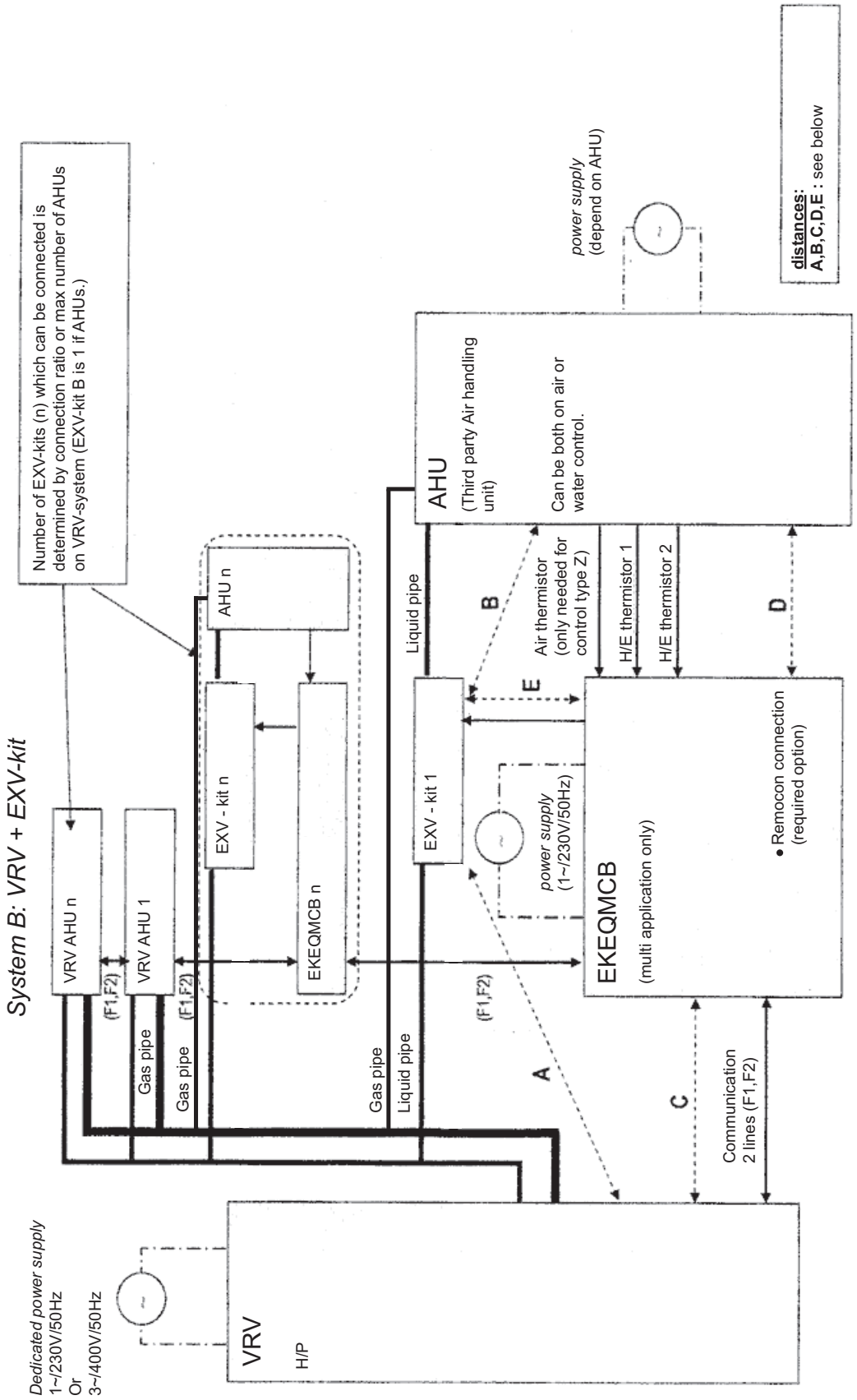
System B: VRV + EXV-kit
Number of EXV-kits (n) which can be connected is determined by connection ratio or max number of AHUs on VRV-system (EXV-kit B is 1 if AHUs.)
VRV AHU n
VRV AHU 1
(F1,F2)
(F1,F2)
Gas pipe
Gas pipe
AHU n
EXV - kit n
EKEQMCB n
Gas pipe
Liquid pipe
Liquid pipe
EXV - kit 1
(F1,F2)
power supply
(1~/230V/50Hz)
A
B
E
AHU
(Third party Air handling unit)
Can be both on air or water control.
Air thermistor
(only needed for control type Z)
H/E thermistor 1
H/E thermistor 2
power supply
(depend on AHU)
D
distances:
A,B,C,D,E : see below
EKEQMCB
(multi application only)
• Remocon connection
(required option)
C
Communication
2 lines (F1,F2)
Dedicated power supply
1~/230V/50Hz
Or
3~/400V/50Hz
VRV
H/P

Allowable lengths and heights

System B:

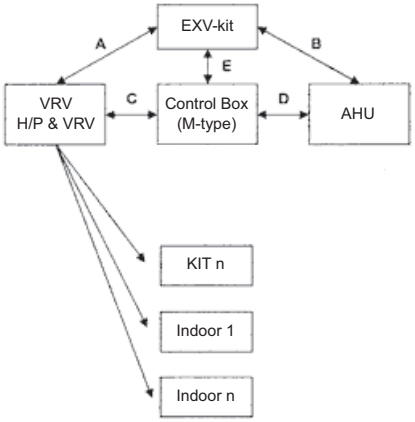

Allowable height:

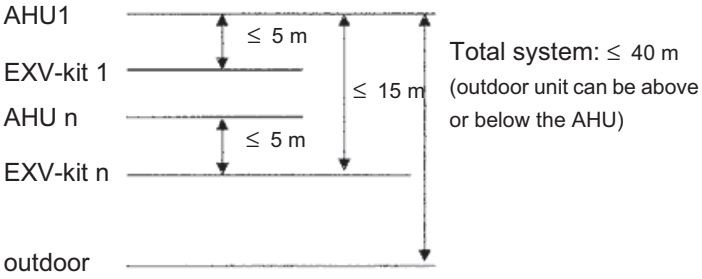

	Piping		Communication		
	A + B	B	C	D	E
VRV	consider same as 1 indoor unit	length: ≤ 5 m	follow std. VRV wiring length policy	≤ 50 m	≤ 50 m

Connection ratio: 50-110%

2. X, Y, Z Control

The D, F, M boxes have different types of control, giving the ability to control different temperatures (Td, Ts, Tr, Te or Tc).

Schematic:

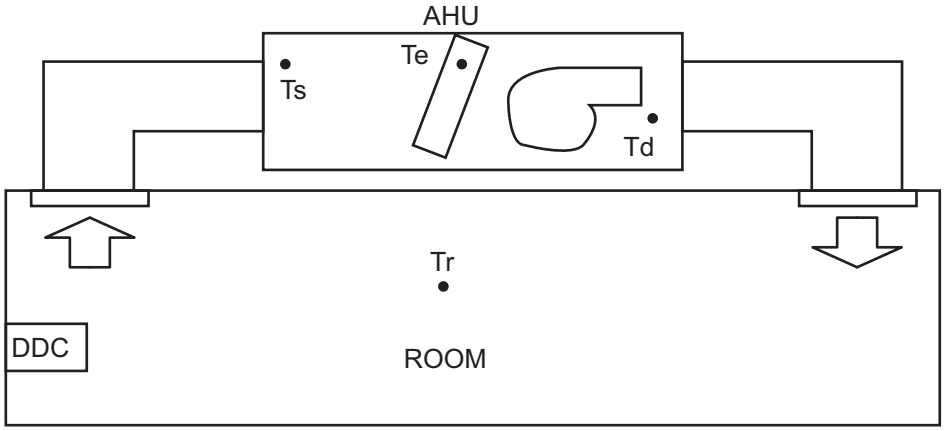

Legend:

T_d	Discharge air control
T_s	Suction air control
T_r	Room air control
T_e	Evaporating temperature control
T_c	Condensing temperature control
AHU	Air handling unit
DDC	Digital controller

EKEQD: Z-control
EKEQF: X, Y-control
EKEQM: Z-control

2.1 X-Control

Control of air temperature (Td, Ts or Tr) by means of an external device (DDC controller, 0-10V control).

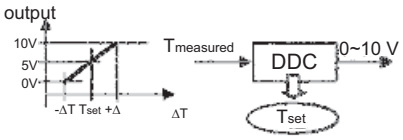

$\Delta T = T_{set} - T_{measured}$
$T_{measured} = T_d$, T_s or T_r

Components for control:
- DDC (field supply)
- Air thermistor (field supply)
- BRC1D (only for servicing)

++ Possibility for Td control
Flexibility in applications
-- Higher cost (DDC needed)

In case of X-control, a DDC-controller is needed to operate the unit. This DDC-controller is field supply but in order to connect it to our ERQ-system, it is required that it emits a 0-10 VDC signal towards the control box.

2.1.1 Different levels

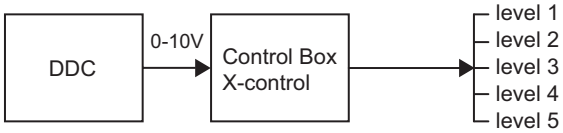

Inside the control box, this 0-10 VDC signal is converted into a voltage level.

The output voltage increase gives the voltage at which the level increases.
The output voltage decrease gives the voltage at which the level decreases.

	Output level	Level 1	Level 2	Level 3	Level 4	Level 5
DDC	Output voltage increasing	1.8 -->	3.8 -->	6.8 -->	8.8 -->	
	Output voltage decreasing	1.2 <--	3.2 <--	6.2 <--	8.2 <--	

Example:
Room temperature = 20°C, set temperature = 25°C. Heating operation: DDC controller, calculates the difference and sends a 3 VDC signal (fictive value) to the control box. This is between 1,8 and 3,8 so in level 2. When the room temperature rises to 23°C, the DDC controller detects a smaller temperature difference and will send out a higher signal, ex. 5 VDC. The output voltage has increased so you have to use the highest line, indicating that you are now in level 3. When the window is opened, the room temperature drops and the difference with the set temperature is higher. The DDC sends a 1 V signal. According to the “output voltage decreasing” line, we are now in level 1.

2.1.2 Refrigerant target temperature

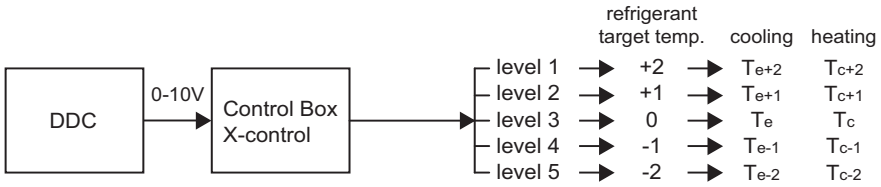

Example, continued:
3 VDC = level 2, thus meaning an increase of the refrigerant target temperature. In heating mode, this means Tc + 1°C. Logically, the room temperature will rise so at the next signal, we are in level 3, where Tc is kept even.

		Cooling	Heating
ΔT < 0	level 1 + level 2	DDC asks less capacity	DDC asks more capacity
ΔT = 0	level 3	no change	no change
ΔT > 0	level 4 + level 5	DDC asks more capacity	DDC asks less capacity

ΔT = room temp. - set temp.

2.2 Y-Control

Control of evaporating and condensing temperature (Te and Tc) by Daikin control (no DDC needed).

Fixed Te or Tc
Te = user setting: -3 ~ 10°C
Tc = user setting: 43 ~ 49°C

Components for control:
- BRC1D (only for servicing)

++ Low cost
No BRC needed
-- No air temperature control

With Y-control, there is no external input to change Te/Tc value. Their values can only be changed by local setup with a Daikin remote control (during installation). We refer to the chapter “Field Setting” for further information.

2.3 Z-Control

Control of air temperature (Ts or Tr) by Daikin control (no DDC needed).

Components for control:
- Air thermistor (Daikin)
- BRC1D (Daikin)
- KRP4A (Daikin option, remote on/off)

++ Low cost
-- BRC needed
No possibility for Td control

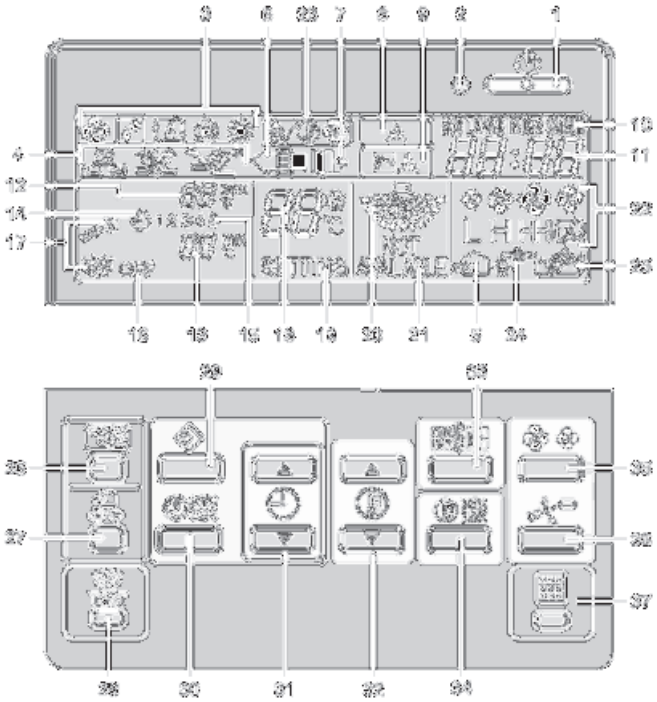

Item	Name	User	Z	BP	M	BM
1	On/off button	Customer	0	0	0	0
28	Inspection/test operation button	Installer	0	0	0	0
29	Programming button	Installer	0	0	0	0
30	Schedule timer button	Customer	0	0	0	0
31	Time adjust buttons	Customer	0	0	0	0
32	Temperature adjust buttons	Customer	0	0	0	0
33	Operation change/min-max button	Customer	0	0	0	0
34	Setpoint/limit button	Customer	0	0	0	0
35	Fan speed button	Customer	x	0	x	x
36	Air flow direction adjust button	Customer	x	x	x	x
37	Air filter cleaning time icon reset button	Customer	x	0	x	x

3. Wiring Diagram of Control Box

3.1 D-box

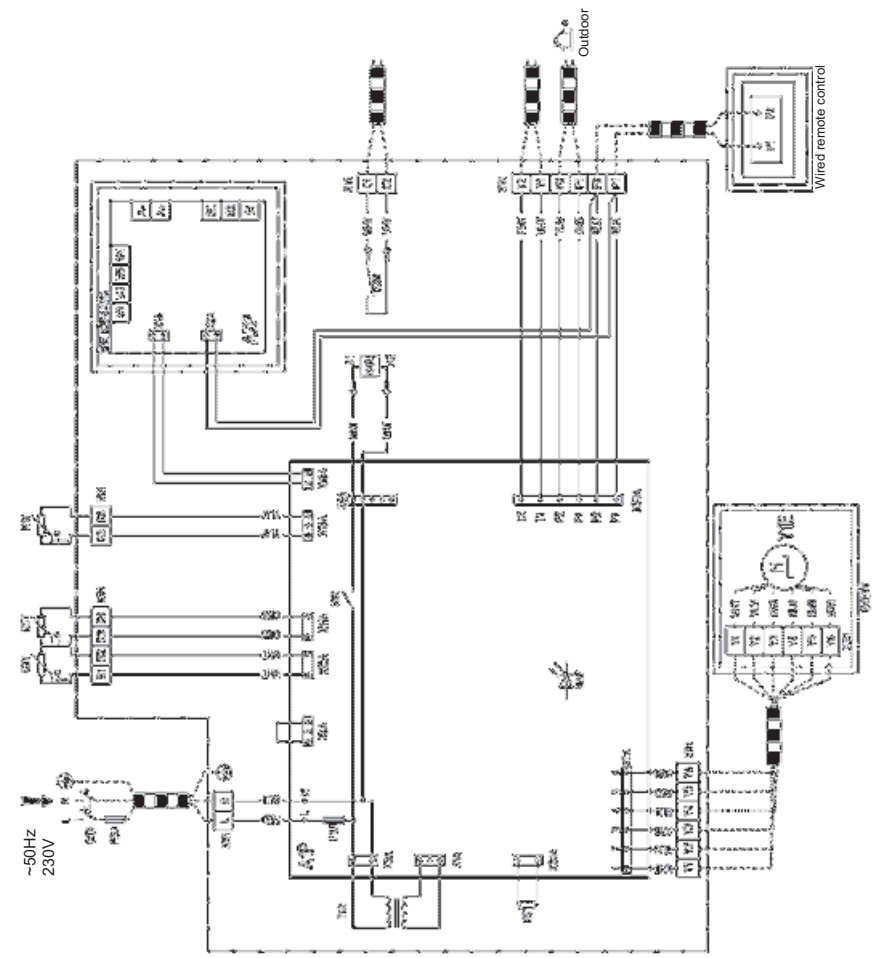

EKEQDCB

A1P : Printed circuit board
A2P : Printed circuit board (Option KRP4)
F1U : Fuse (250V, F5A) (A1P)
F3U : Field fuse
HAP : Light emitting diode (service monitor green)
K1R : Magnetic relay
K4R : Magnetic relay (Fan) AC
Q1DI : Earth leakage breaker
R7 : Capacity adapter
R1T : Thermistor (Air)
R2T : Thermistor (Liquid)
R3T : Thermistor (Gas)
T1R : Transformer (220V/21.8V)
X1M : Terminal block
X2M : Terminal block
X1M-R1/R2 : Thermistor Fluid
X1M-R3/R4 : Thermistor Gas
X1M-R5/R6 : Thermistor Air
X1M-Y1~6 : Expansion valve
X1M-Y7/Y8 : Output Pump ON/OFF
X1M-P1/P2 : Communication remote control
X1M-F1/F2 : Communication outdoor
X1M-T1/T2 : Input: ON/OFF
Y1E : Electronic expansion valve

1 Use copper conductors only.
2 BLK: Black / WHT: White / RED: Red / BLU: Blue / BRN: Brown / GRY: Grey / GRN: Green / ORG: Orange / PINK: Pink / YLW: Yellow

L : Live
N : Neutral
: Connector
: Wire clamp
: Protective earth (Screw)
: Seperate component
: Optional accessory
: Field wiring

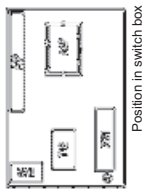

3.2 F-box

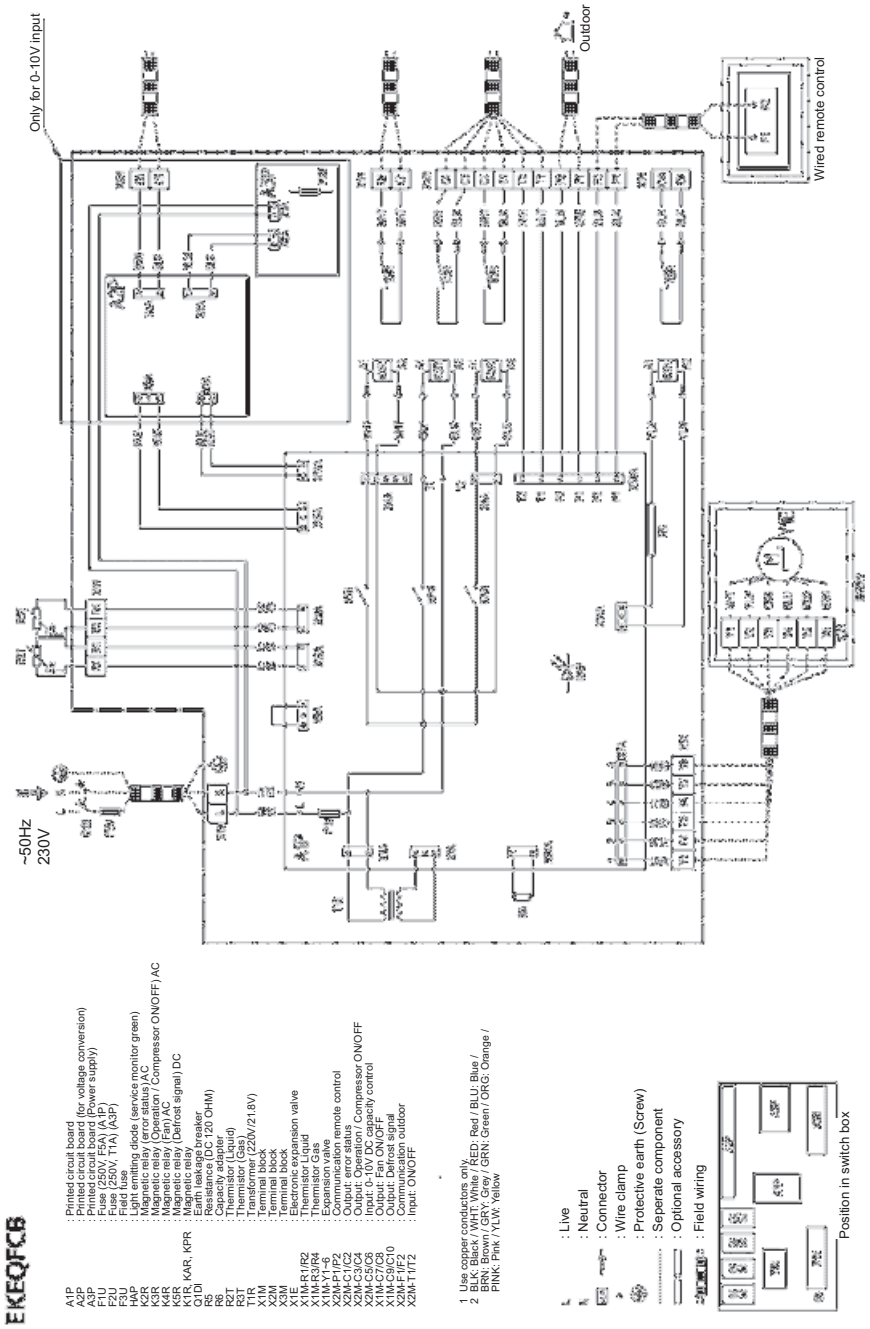
Only for 0-10V input
Outdoor
Wired remote control
~50Hz
230V
EKEQFCB
A1P : Printed circuit board
A2P : Printed circuit board (for voltage conversion)
A3P : Printed circuit board (Power supply)
F1U : Fuse (250V, T1A) (A1P)
F2U : Fuse (250V, T1A) (A3P)
F3U : Field fuse
H4P : Light emitting diode (service monitor green)
K1R : Magnetic relay (Error status AC)
K3R : Magnetic relay (Operation / Compressor ON/OFF) AC
K4R : Magnetic relay (Fan) AC
K5R, KAR, KPR : Magnetic relay (Defrost signal) DC
Q1DI : Earth leakage breaker
R5 : Resistance (DC 120 OHM)
R6 : Capacity adapter
R2T : Thermistor (Liquid)
R3T : Thermistor (Gas)
T1R : Transformer (220V/21.8V)
X1M : Terminal block
X2M : Terminal block
X3M : Terminal block
X1E : Electronic expansion valve
X1M-R1/R2 : Thermistor Liquid
X1M-R3/R4 : Thermistor Gas
X1M-Y1/Y2 : Electronic valve
X2M-P1/P2 : Communication remote control
X2M-C1/C2 : Output: error status
X2M-C3/C4 : Output: Operation / Compressor ON/OFF
X2M-C5/C6 : Input: 0-10V DC capacity control
X1M-C7/C8 : Output: Fan ON/OFF
X1M-C9/C10 : Output: Defrost signal
X2M-F1/F2 : Communication outdoor
X2M-T1/T2 : Input: ON/OFF
1 Use copper conductors only.
2 BLK: Black / WHT: White / RED: Red / BLU: Blue / BRN: Brown / GRY: Grey / GRN: Green / ORG: Orange / PINK: Pink / YLW: Yellow
L : Live
N : Neutral
: Connector
: Wire clamp
: Protective earth (Screw)
: Seperate component
: Optional acessory
: Field wiring
Position in switch box

4. Attention Points

- Do not forget to place the capacity setting adapter. Otherwise, you'll get UA or PJ error. All capacity setting adapters are delivered with the control box.
- Polarity of the C5/C6-contact (F-box, X-control) C5 = ”-”, C6 = ”+”

5. System A: EKEQF & EKEQD-box: Installation and Operation Manual

INSTALLATION AND OPERATION MANUAL

Option kit for combination of Daikin condensing units with field supplied air handling units

Installation and operation manual Option kit for combination of Daikin condensing units with field supplied air handling units	**English**
Installations- und Bedienungsanleitung Erweiterungsbausatz für die Verbindung von Daikin-Verflüssigern mit bauseitigen Luftbehandlungsgeräten	**Deutsch**
Manuel d'installation et d'utilisation Kit d'options pour combinaison de groupes condenseur Daikin et unités de traitement de l'air non fournies	**Français**
Montagehandleiding en gebruiksaanwijzing Optiekit voor combinatie van condensorunits van Daikin met lokaal geleverde luchtbehandelingsunits	**Nederlands**
Manual de instalación y operación Kit de opciones para la combinación de unidades de condensación Daikin con unidades de tratamiento de aire suministradas	**Español**
Manuale di installazione e d'uso Kit opzioni per la combinazione di unità di condensazione Daikin con unità per il trattamento dell'aria non in dotazione	**Italiano**
Manual de instalação e de funcionamento Kit de opções para combinação de unidades de condensação Daikin com unidades de tratamento de ar existentes no local	**Portugues**
Инструкция по монтажу и эксплуатации Комплект дополнительного оборудования для подключения конденсаторных агрегатов Daikin к приобретаемым на внутреннем рынке	**русский**
Instrukcja montażu i instrukcja obsługi Zestaw opcji dla agregatów skraplających Daikin w konfiguracji z centralami klimatyzacyjnymi dostarczanymi osobno	**polski**

EKEQFCBV3
EKEQDCBV3

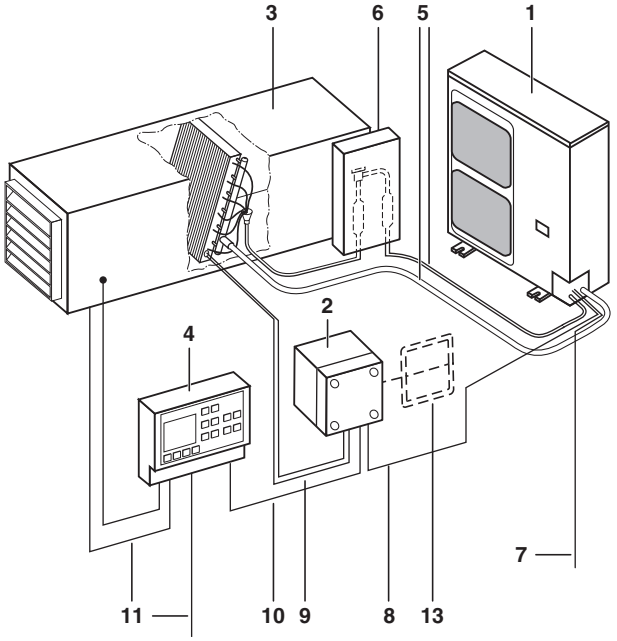

1 EKEQFCBV3

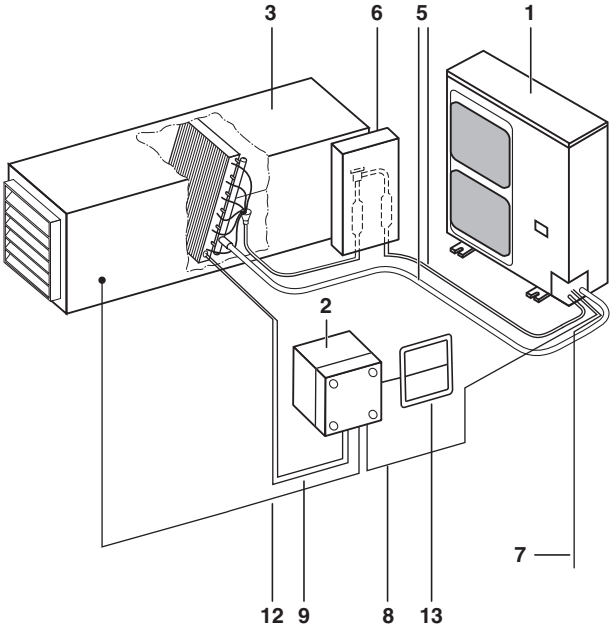

2 EKEQDCBV3

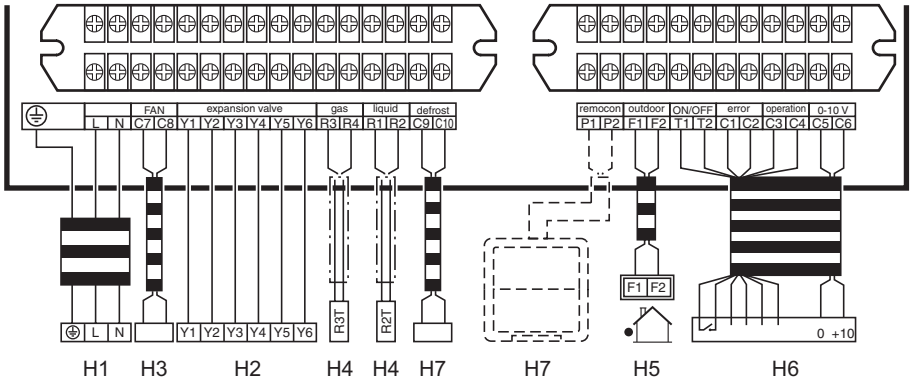

3 EKEQFCBV3

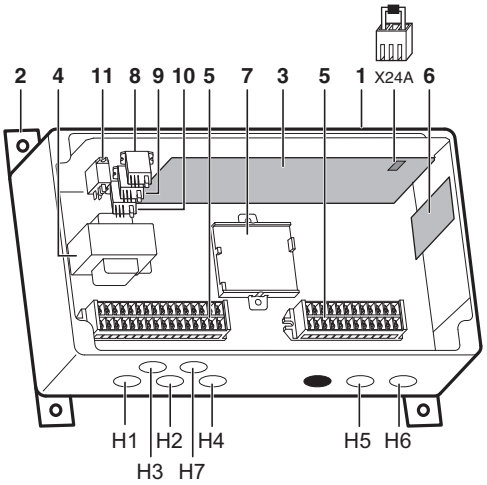

4 EKEQFCBV3

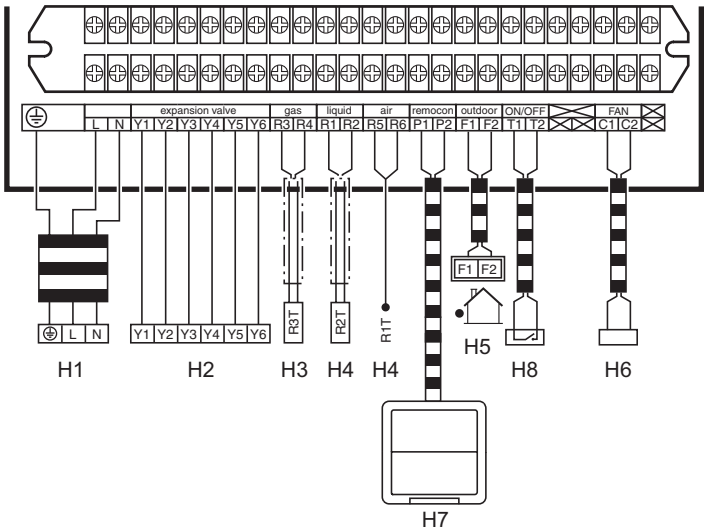

5 EKEQDCBV3

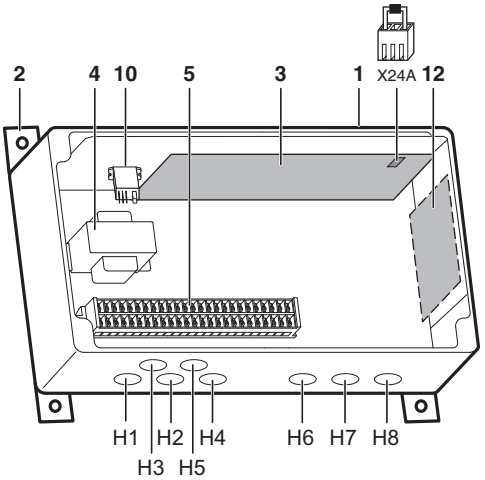

6 EKEQDCBV3

CONTENTS

Page

Introduction ***64***

Installation ***65***

Accessories 65

Name and function of parts 65

Before installation 65

Selecting the installation site 66

Valve kit installation 67

Installation of the electrical control box 68

Electric wiring work 68

Installation of thermistors 71

Refrigerant piping work 72

Test operation 72

Operation and maintenance ***72***

What to do before operation 72

Operation and display signals 74

Troubleshooting 74

Maintenance 75

Disposal requirements 75

READ THESE INSTRUCTIONS CAREFULLY BEFORE INSTALLATION AND OPERATION.

IMPROPER INSTALLATION OR ATTACHMENT OF EQUIPMENT OR ACCESSORIES COULD RESULT IN ELECTRIC SHOCK, SHORT-CIRCUIT, LEAKS, FIRE OR OTHER DAMAGE TO THE EQUIPMENT. BE SURE ONLY TO USE ACCESSORIES MADE BY DAIKIN WHICH ARE SPECIFICALLY DESIGNED FOR USE WITH THE EQUIPMENT AND HAVE THEM INSTALLED BY A PROFESSIONAL.

IF UNSURE OF INSTALLATION PROCEDURES OR USE, ALWAYS CONTACT YOUR DAIKIN DEALER FOR ADVICE AND INFORMATION.

The English text is the original instruction. Other languages are translations of the original instructions.

INTRODUCTION

- Do only use this system in combination with a field supplied air handling unit. Do not connect this system to other indoor units.
- Only optional controls as listed in the optional accessories list can be used.

We distinguish 2 different control boxes, each with its own application and installation requirements.

- EKEQFCB control box (2 possible operation modes)
  - Operation with 0–10 V input to control the capacity
    An external controller is needed to control the capacity. For details of the necessary functions of the external controller refer to paragraph "Operation with 0–10 V capacity control". It can be used to control the room temperature or air discharge temperature.
  - Operation with fixed T_e/T_c temperature control
    This system operates on a fixed evaporating temperature.
- EKEQDCB control box
  The system will operate as a standard indoor unit to control the room temperature. This system does not require a specific external controller.
- Do NOT connect the system to DIII-net devices:
  - intelligent touch Controller
  - intelligent Manager
  - DMS-IF
  - BACnet Gateway
  - ...

  This could result in malfunction or breakdown of the total system.
- This equipment is not designed for year-round cooling applications with low indoor humidity conditions, such as Electronic Data Processing rooms.
- This appliance is not intended for use by persons, including children, with reduced physical, sensory or mental capabilities, or lack of experience and knowledge, unless they have been given supervision or instruction concerning use of the appliance by a person responsible for their safety.
  Children should be supervised to ensure that they do not play with the appliance.

INSTALLATION

- For installation of the air handling unit, refer to the air handling unit installation manual.
- Never operate the air conditioner with the discharge pipe thermistor (R3T), suction pipe thermistor (R2T) and pressure sensors (S1NPH, S1NPL) removed. Such operation may burn out the compressor.
- The equipment is not intended for use in a potentially explosive atmosphere.

ACCESSORIES

		EKEQFCB	EKEQDCB
Thermistor (R1T)		—	1
Thermistor (R3T/R2T) (2.5 m cable)		2	
Insulation sheet		2	
Rubber sheet		2	
Wire to wire splice		4	6
Installation and operation manual		1	
Screw nut		7	8
Tie wrap		6	
Capacity setting adapter		7	
Stopper (closing cup)		2	—

Obligatory accessory

	EKEQFCB	EKEQDCB
Expansion valve kit	EKEXV	

Refer to chapter "Valve kit installation" on page 67 for installation instructions.

Optional accessories

		EKEQFCB	EKEQDCB
Remote control		1(*)	1

(*) Not required for operation, only useful accessory tool for service and installation.

NAME AND FUNCTION OF PARTS (See figure 1 and figure 2)

Parts and components

1 Outdoor unit

2 Control box (EKEQFCB / EKEQDCB)

3 Air handling unit (field supply)

4 Controller (field supply)

5 Field piping (field supply)

6 Expansion valve kit

Wiring connections

7 Outdoor unit power supply

8 Control box wiring
(Power supply and communication between control box and outdoor unit)

9 Air handling unit thermistors

10 Communication between controller and control box

11 Power supply and control wiring for air handling unit and controller (power supply is separate from the outdoor unit)

12 Air thermistor control for air handling unit

13 Remote control (--------- = for service only)

BEFORE INSTALLATION

Cautions for selection of the air handling unit

See table below for applicable units.

Select the air handling unit (field supply) according to the technical data and limitations mentioned below.

The design pressure of the air handling unit is at least 40 bar.

Lifetime of the outdoor unit, operation range or operation reliability may be influenced if you neglect these limitations.

Limits for outdoor unit (expansion valve kit)

Outdoor unit (class)	EKEXV kit
100	EKEXV63~125
125	EKEXV63~140
140	EKEXV80~140

Outdoor unit (class)	EKEXV kit
200	EKEXV100~250
250	EKEXV125~250

Depending on the heat exchanger, a connectable EKEXV (expansion valve kit) must be selected to these limitations.

EKEXV class	Allowed heat exchanger volume (dm^3)		Allowed heat exchanger capacity (kW)	
	Minimum	Maximum	Minimum	Maximum
63	1.66	2.08	6.3	7.8
80	2.09	2.64	7.9	9.9
100	2.65	3.30	10.0	12.3
125	3.31	4.12	12.4	15.4
140	4.13	4.62	15.5	17.6
200	4.63	6.60	17.7	24.6
250	6.61	8.25	24.7	30.8

Saturated suction temperature (SST) = 6°C, SH (superheat) = 5 K, air temperature = 27°C DB / 19°C WB.

1 Selecting the condensing unit

Depending on necessary capacity of the combination an outdoor unit needs to be selected (see "Engineering databook" for capacity).

- Each outdoor unit can be connected to a range of air handling units.
- The range is determined by the allowed expansion valve kits.

2 Selecting the expansion valve

The corresponding expansion valve needs to be selected for your air handling unit. Select the expansion valve according to the above limitations.

NOTE

- If conflicting result, capacity selection has priority over volume.
- The expansion valve is an electronic type, it is controlled by the thermistors that are added in the circuit. Each expansion valve can control a range of air handling units sizes.
- The selected air handling unit must be designed for R410A.
- Extraneous substances (including mineral oils or moisture) must be prevented from getting mixed into the system.
- SST: saturated suction temperature at exit of air handling unit.

3 Selecting the capacity setting adapter (see accessories)

- The corresponding capacity setting adapter needs to be selected depending on the expansion valve.
- Connect the correct selected capacity setting adapter to X24A (A1P). (See figure 4 and figure 6)

EKEXV kit	Capacity setting adapter label (indication)
63	J71
80	J90
100	J112
125	J140

EKEXV kit	Capacity setting adapter label (indication)
140	J160
200	J224
250	J280

For the following items, take special care during construction and check after installation is finished

Tick ✓ when checked	
☐	Are the thermistors fixed firmly? Thermistor may come loose.
☐	Is the freeze-up setting done correctly? The air handling unit may freeze up.
☐	Is the control box fixed firmly? The unit may drop, vibrate or make noise.
☐	Do electrical connections comply with specifications? The unit may malfunction or components may burn out.
☐	Are wiring and piping correct? The unit may malfunction or components may burn out.
☐	Is the unit safely grounded? Dangerous at electric leakage.

Selecting the installation site

This is a class A product. In a domestic environment this product may cause radio interference in which case the user may be required to take adequate measures.

Select an installation site where the following conditions are fulfilled and that meets your customer's approval.

- The option boxes (expansion valve and electrical control box) can be installed inside and outside).
- Do not install the option boxes in or on the outdoor unit.
- Do not put the option boxes in direct sunlight. Direct sunlight will increase the temperature inside the option boxes and may reduce its lifetime and influence its operation.
- Choose a flat and strong mounting surface.
- Operating temperature of the control box is between –10°C and 40°C.
- Keep the space in front of the boxes free for future maintenance.
- Keep air handling unit, power supply wiring and transmission wiring at least 1 m away from televisions and radios. This is to prevent image interference and noise in those electrical appliances. (Noise may be generated depending on the conditions under which the electric wave is generated, even if 1 m is kept.)
- Make sure the control box is installed horizontally. Screw nuts position must be downwards.

Precautions

Do not install or operate the unit in rooms mentioned below.

- Where mineral oil, like cutting oil is present.
- Where the air contains high levels of salt such as air near the ocean.
- Where sulphurous gas is present such as that in areas of hot spring.
- In vehicles or vessels.
- Where voltage fluctuates a lot such as that in factories.
- Where high concentration of vapor or spray are present.
- Where machines generating electromagnetic waves are present.
- Where acidic or alkaline vapor is present.
- The option boxes must be installed with entrances downward.

VALVE KIT INSTALLATION

Mechanical installation

1 Remove the valve kit box cover by unscrewing 4x M5.

2 Drill 4 holes on correct position (measurements as indicated in figure below) and fix the valve kit box securely with 4 screws through the provided holes Ø9 mm.

NOTE

- Make sure that the expansion valve is installed vertically.
- Make sure there is enough free space for future maintenance.

Brazing work

For details, see manual of the outdoor unit.

3 Prepare the inlet/outlet field piping just in front of the connection (do **not** braze yet).

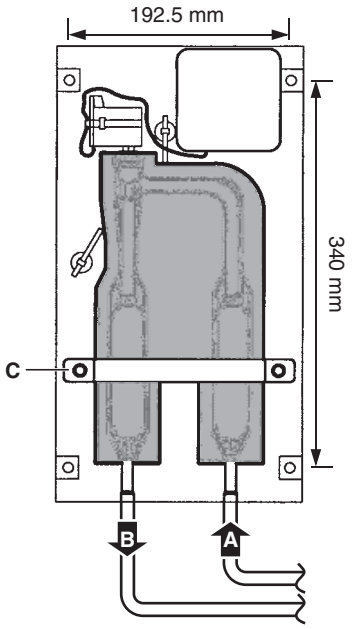

A	Inlet coming from the outdoor unit
B	Outlet to air handling unit
C	Pipe fixing clamp

4 Remove the pipe fixing clamp (C) by unscrewing 2x M5.

5 Remove the upper and lower pipe insulations.

6 Braze the field piping.

- Make sure to cool the filters and valve body with a wet cloth and make sure the body temperature does not exceed 120°C during brazing.
- Make sure that the other parts such as electrical box, tie wraps and wires are protected from direct brazing flames during brazing.

7 After brazing, put the lower pipe insulation back in place and close it with the upper insulation cover (after pealing off the liner).

8 Secure the pipe fixing clamp (C) in place again (2x M5).

9 Make sure that field pipes are fully insulated.

Field pipe insulation must reach up to the insulation you have put back in place as per procedure step 7. Make sure that there is no gap between both ends in order to avoid condensation dripping (finish the connection with tape eventually).

Cautions for brazing

- Be sure to carry out a nitrogen blow when brazing.
  Brazing without carrying out nitrogen replacement or releasing nitrogen into the piping will create large quantities of oxidized film on the inside of the pipes, adversely affecting valves and compressors in the refrigerating system and preventing normal operation.
- When brazing while inserting nitrogen into the piping, nitrogen must be set to 0.02 MPa with a pressure-reducing valve (=just enough so that it can be felt on the skin).

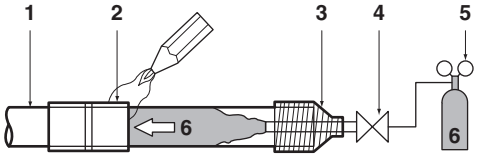

1	Refrigerant piping
2	Part to be brazed
3	Taping
4	Hands valve
5	Pressure-reducing valve
6	Nitrogen

- For details, see manual of the outdoor unit.

Electrical work

1 Open the electrical box cover (A).

2 Push out **ONLY** the second lower wire intake hole (B) from inside to outside. Do not damage the membrane.

3 Pass valve cable (with wires Y1 ... Y6) from the control box through that membrane wire intake hole and connect the cable wires into the terminal connector (C) following instructions as described in step 4. Route the cable out of the valve kit box according to figure below and fix with the tie wrap (D). See "Electric wiring work" on page 68 for more details.

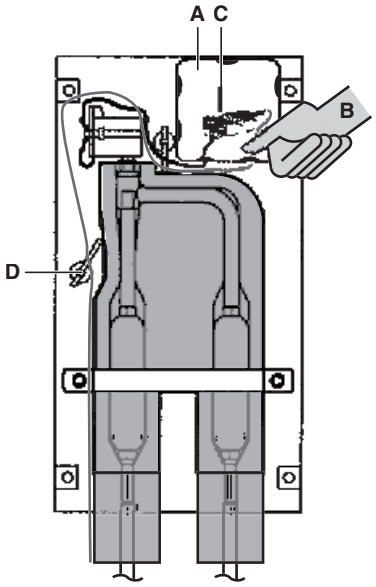

4 Use a small screwdriver and follow indicated instructions for connecting cable wires into the terminal connector according to the wiring diagram.

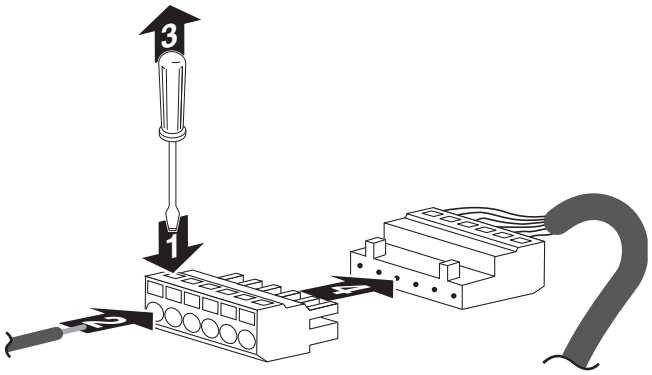

5 Make sure that field wiring and insulation is not squeezed when closing the valve kit box cover.

6 Close the valve kit box cover (4x M5).

INSTALLATION OF THE ELECTRICAL CONTROL BOX (See figure 4 and figure 6)

1 Control box
2 Hanger brackets
3 Main PCB
4 Transformer
5 Terminal
6 PCB (for voltage conversion)
7 PCB (power supply)
8 Magnetic relay (operation / compressor ON/OFF)
9 Magnetic relay (error status)
10 Magnetic relay (fan)
11 Magnetic relay (defrost)
12 Optional PCB (KRP4)

Mechanical installation

1 Fix the control box with its hanger brackets to the mounting surface.
Use 4 screws (for holes of Ø6 mm).

2 Open the lid of the control box.

3 For electrical wiring: refer to paragraph "Electric wiring work" on page 68.

4 Install the screw nuts.

5 Close the unnecessary openings with stoppers (closing cups).

6 Close the lid securely after installation to ensure that the control box is watertight.

ELECTRIC WIRING WORK

- All field supplied parts and materials and electric works must be conform to local codes.
- Use copper wire only.
- All wiring must be performed by an authorized electrician.
- A main switch or other means for disconnection, having a contact separation in all poles, must be incorporated in the fixed wiring in accordance with relevant local and national legislation.
- Refer to the installation manual attached to the outdoor unit for the size of power supply electric wire connected to the outdoor unit, the capacity of the circuit breaker and switch, wiring and wiring instructions.
- Attach the earth leakage circuit breaker and fuse to the power supply line.

Connection of the wires inside the control box

1 For connection to outdoor unit and to controller (field supply):
Pull the wires inside through the screw nut and close the nut firmly in order to ensure a good pull relieve and water protection.

2 The cables require an additional pull-relief. Strap the cable with the installed tie wrap.

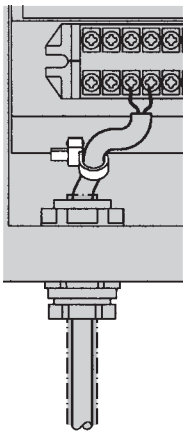

Precautions

- Thermistor cable and remote control wire should be located at least 50 mm away from power supply wires and from wires to the controller. Not following this guideline may result in malfunction due to electrical noise.
- Use only specified wires, and tightly connect wires to the terminals. Keep wiring in neat order so that it does not obstruct other equipment. Incomplete connections could result in overheating, and in worse case electric shock or fire.

Connecting the wiring: EKEQFCBV3

- Connect the wires to the terminal board according to the wiring diagram in figure 3. See figure 4 for wiring intake in the control box. The wiring intake hole indication H1 refers to the H1 cable of the corresponding wiring diagram.

- Connect cables according to specifications of the next table.

Take special precaution for connection to the controller (field supply). Do not miswire the output signals nor the input signal (ON/OFF). This mistake could damage the entire system.

Table connection and application

	Description	Connect to	Type of cable	Cross section (mm^2)(*)	Maximum length (m)	Specifications
L, N, earth	Power supply	Power supply	H05VV-F3G2.5	2.5	—	Power supply 230 V 1~ 50 Hz
Y1~Y6	Expansion valve connection	Expansion valve kit	LIYCY3 x 2 x 0.75	0.75	20	Digital output 12 V DC
R1,R2	Thermistor R2T (liquid pipe)	—	H05VV-F2 x 0.75		Standard 2.5 Maximum 20	Analog input 16 V DC
R3,R4	Thermistor R3T (gas pipe)					
P1,P2	Remote control (optional)				100	Communication line 16 V DC
F1,F2	Communication to outdoor unit	Outdoor unit				
T1,T2	ON/OFF	Controller field supply	LIYCY4 x 2 x 0.75		(†)	Digital input 16 V DC
C1,C2	Error signal					Digital output: voltage free. Maximum 230 V, maximum 0,5 A
C3,C4	Operation signal(‡)					
C5,C6	Capacity step(#)					Analog input: 0–10 V
C7,C8	Fan signal	Air handling unit fan field supply	H05VV-F3G2.5	2.5	—	Digital output: voltage free. Maximum 230 V, maximum 2 A
C9,C10	Defrost signal	Controller field supply	LIYCY4 x 2 x 0.75	0.75	(†)	Digital output: voltage free. Maximum 230 V, maximum 0,5 A

(*) Recommended size (all wiring must comply with local codes).
(†) The maximum length depends on the external device that is connected (controller/relay,....)
(‡) Operation signal: indicates compressor operation.
(#) Only necessary for capacity controlled system.

Wiring diagram

A1P.....Printed circuit board
A2P.....Printed circuit board (for voltage conversion)
A3P.....Printed circuit board (power supply)
F1U.....Fuse (250 V, F5A)(A1P)
F2U.....Fuse (250 V, T1A)(A3P)
F3U.....Field fuse
HAP .....Light emitting diode (service monitor-green)
K2R.....Magnetic relay (error status)
K3R.....Magnetic relay (operation / compressor ON/OFF)
K4R.....Magnetic relay (fan)
K5R.....Magnetic relay (defrost signal)
K1R,KAR,KPR....Magnetic relay
Q1DI .....Earth leakage breaker
R2T.....Thermistor (liquid)
R3T.....Thermistor (gas)
R5.....Resistance (120 Ω)
R6.....Capacity adapter
T1R.....Transformer (220 V/21.8 V)
X1M,X2M,X3M ...Terminal block
Y1E.....Electronic expansion valve
X1M-C7/C8.....Output: fan ON/OFF
X1M-C9/C10.....Output: defrost signal
X1M-R1/R2.....Thermistor liquid
X1M-R3/R4.....Thermistor gas
X1M-Y1~6 .....Expansion valve
X2M-C1/C2.....Output: error status
X2M-C3/C4 ..... Output: operation / compressor ON/OFF
X2M-C5/C6..... Input: 0-10 V DC capacity control
X2M-F1/F2..... Communication outdoor unit
X2M-P1/P2 ..... Communication remote control
X2M-T1/T2..... Input: ON/OFF
..... Field wiring
L..... Live
N ..... Neutral
, ... Connector
..... Wire clamp
..... Protective earth (screw)
..... Separate component
..... Optional accessory
BLK..... Black
BLU..... Blue
BRN ..... Brown
GRN..... Green
GRY ..... Gray
ORG ..... Orange
PNK ..... Pink
RED ..... Red
WHT ..... White
YLW ..... Yellow

Connecting the wiring: EKEQDCBV3

- Connect the wires to the terminal board according to the wiring diagram in figure 5. See figure 6 for wiring intake in the control box. The wiring intake hole indication H1 refers to the H1 cable of the corresponding wiring diagram.
- Connect cables according to specifications of the next table.

Table connection and application

	Description	Connect to	Type of cable	Cross section (mm^2)(*)	Maximum length (m)	Specifications
L, N, earth	Power supply	Power supply	H05VV-F3G2.5	2.5	—	Power supply 230 V 1~ 50 Hz
Y1~Y6	Expansion valve connection	Expansion valve kit	LIYCY3 x 2 x 0.75	0.75	20	Digital output 12 V DC
R1,R2	Thermistor R2T (liquid pipe)	—	H05VV-F2 x 0.75		Standard: 2.5 Max.: 20	Analog input 16 V DC
R3,R4	Thermistor R3T (gas pipe)					
R5,R6	Thermistor R1T (air)					
P1,P2	Remote control				100	Communication line 16 V DC
F1,F2	Communication to outdoor unit	Outdoor unit				
T1,T2	ON/OFF	Controller field supply			—	Digital input 16 V DC
—	Capacity step		LIYCY4 x 2 x 0.75	Optional connection: when the function of the switch box needs to be extended: see KRP4A51 for details of settings and instructions.		
—	Error signal					
—	Operation signal					
C1,C2	Fan signal	Air handling unit fan field supply	H05VV-F3G2.5	2.5	—	Digital output: voltage free. Maximum 230 V, maximum 2 A

(*) Recommended size (all wiring must comply with local codes).

Wiring diagram

A1P ..... Printed circuit board
A2P ..... Printed circuit board (option KRP4)
F1U ..... Fuse (250 V, F5A)(A1P)
F3U ..... Field fuse
HAP..... Light emitting diode (service monitor-green)
K1R ..... Magnetic relay
K4R ..... Magnetic relay (fan)
Q1DI..... Earth leakage breaker
R1T..... Thermistor (air)
R2T ..... Thermistor (liquid)
R3T ..... Thermistor (gas)
R7..... Capacity adapter
T1R ..... Transformer (220 V/21.8 V)
X1M,X3M ..... Terminal block
Y1E ..... Electronic expansion valve
X1M-C1/C2 ..... Output: fan ON/OFF
X1M-F1/F2 ..... Communication outdoor unit
X1M-P1/P2..... Communication remote control
X1M-R1/R2 ..... Thermistor liquid
X1M-R3/R4 ..... Thermistor gas
X1M-R5/R6 ..... Thermistor air
X1M-T1/T2 ..... Input: ON/OFF
X1M-Y1~6 ..... Expansion valve

::▬▬▬:: ..... Field wiring
L ..... Live
N..... Neutral
▭, —▬⊃— ..... Connector
∘ ..... Wire clamp
⏚ ..... Protective earth (screw)
—·— ..... Separate component
═:═ ..... Optional accessory
BLK..... Black
BLU ..... Blue
BRN..... Brown
GRN ..... Green
GRY..... Gray
ORG ..... Orange
PNK..... Pink
RED..... Red
WHT ..... White
YLW..... Yellow

Installation of thermistors

Refrigerant thermistors

Location of the thermistor

A correct installation of the thermistors is required to ensure a good operation:

1. Liquid (R2T)
   Install the thermistor behind the distributor on the coldest pass of the heat exchanger (contact your heat exchanger dealer).
2. Gas (R3T)
   Install the thermistor at the outlet of the heat exchanger as close as possible to the heat exchanger.

Evaluation must be done to check if the air handling unit is protected against freeze-up.

Execute test operation and check for freeze-up.

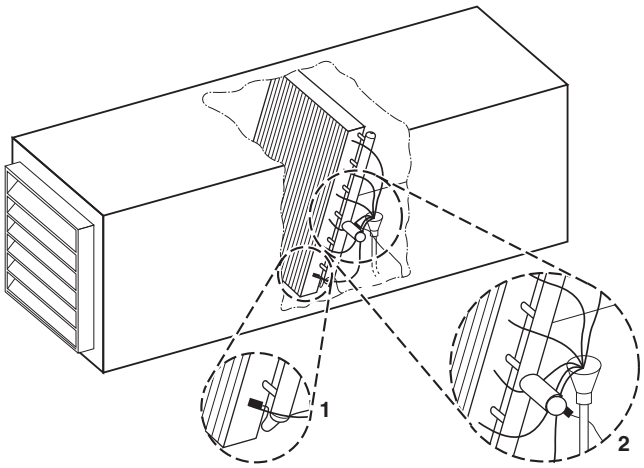

1 Liquid R2T

2 Gas R3T

Installation of the thermistor cable

1 Put the thermistor cable in a separate protective tube.

2 Always add a pull-relief to the thermistor cable to avoid strain on the thermistor cable and loosening of the thermistor. Strain on the thermistor cable or loosening of the thermistor may result in bad contact and incorrect temperature measurement.

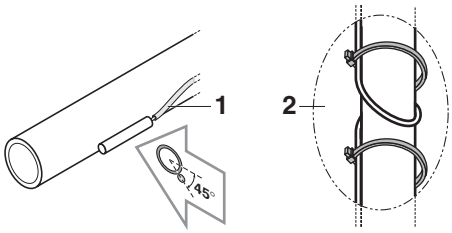

Fixation of the thermistor

- Put the thermistor wire slightly down to avoid water accumulation on top of the thermistor.

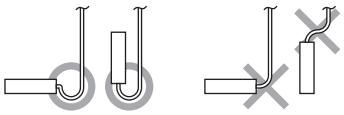

- Make good contact between thermistor and air handling unit. Put the top of the thermistors on the air handling unit, this is the most sensitive point of the thermistor.

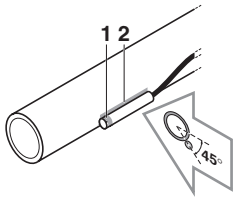

1 Most sensitive point of the thermistor

2 Maximize the contact

1 Fix the thermistor with insulating aluminum tape (field supply) in order to ensure a good heat transference.

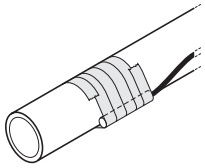

2 Put the supplied piece of rubber around the thermistor (R2T/R3T) in order to avoid loosening of the thermistor after some years.

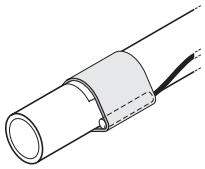

3 Fasten the thermistor with 2 tie wraps.

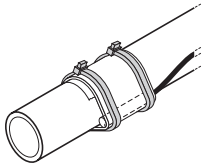

4 Insulate the thermistor with the supplied insulation sheet.

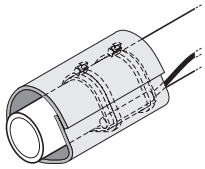

Air thermistor (only for EKEQDCB)

The air thermistor (R1T) can be installed either in the room that needs temperature control or in the suction area of the air handling unit.

NOTE For room temperature control the delivered thermistor (R1T) can be replaced by an optional remote sensor kit KRCS01-1(A) (to be ordered separately).

Installation of longer thermistor cable (R1T/R2T/R3T)

The thermistor is supplied with a standard cable of 2.5 m. This cable can be made longer to up to 20 m.

Install the longer thermistor cable with the delivered wire to wire splices

1. Cut the wire or bundle the remainder of the thermistor cable.
   Keep at least 1 m of the original thermistor cable.
   Do not bundle the cable inside the control box.
2. Strip the wire ±7 mm at both ends and insert these ends into the wire to wire splice.
3. Pinch the splice with the correct crimp tool (pliers).
4. After connection, heat up the shrink-insulation of the wire to wire splice with a shrink-heater to make a water tight connection.
5. Wrap electrical insulation tape around the connection.
6. Put a pull-relief in front of and behind the connection.

- The connection must be made on an accessible location.
- To make the connection waterproof, the connection can also be made in a switch box or connector box.
- The thermistor cable should be located at least 50 mm away from power supply wire. Not following this guideline may result in malfunction due to electrical noise.

Refrigerant piping work

All field piping must be provided by a licensed refrigeration technician and must comply with the relevant local and national codes.

- For refrigerant piping of outdoor unit, refer to the installation manual supplied with the outdoor unit.
- Follow the outdoor unit specifications for additional charging, piping diameter and installation.
- The maximum allowed piping length depends on the connected outdoor model.

Test operation

Before executing "test operation" as well as before operating the unit, you must check the following:

- Refer to the section of "For the following items, take special care during construction and check after installation is finished" on page 66.
- After finishing the construction of refrigerant piping, drain piping and electric wiring, conduct test operation accordingly to protect the unit.
- Open the gas side stop valve.
- Open the liquid side stop valve.

Executing the test operation

1. Close the contact T1/T2 (ON/OFF).
2. Confirm function of the unit according to the manual and check if the air handling unit has collected ice (freeze-up).
   If the unit collects ice: see "Troubleshooting" on page 74.
3. Confirm that the fan of the air handling unit is ON.

- In case of poor distribution in the air handling unit, 1 or more passes of the air handling unit may freeze-up (collect ice) → put the thermistor (R2T) on this position.
- Depending on operation conditions (e.g.: outdoor ambient temperature) it is possible that the settings must be changed after commissioning.

Operation and maintenance

If T1/T2 is applicable:

- Closing the T1/T2 signal starts operation of the air handling unit.
- Opening the T1/T2 signal stops operation of the air handling unit.

What to do before operation

- Before initiating operation, contact your dealer to get the operation manual that corresponds to your system.
- Refer to the dedicated manual of the controller (field supply) and air handling unit (field supply).
- Make sure that the air handling unit fan is ON when the outdoor unit is in normal operation.

Field settings for EKEQDCB

Refer to the installation manuals of both the outdoor unit and the remote control.

Field settings for EKEQFCB

When changing the settings:

1. Make the required settings.
2. Turn power OFF.
3. Remove the remote control after servicing and checking the system in cooling mode. Operating the remote control may disturb the normal operation of the system.
4. Do not change T1/T2 during power failure.
5. Put power of indoor and outdoor unit ON.

Setting the temperature control system

Mode No.	Code No.	Description of setting
13(23)–0	01	Operation with 0–10 V capacity control (= factory setting)
	02	Operation with fixed T_e/T_c temperature control

T_e or SST = evaporating temperature or saturated suction temperature. T_c = condensing temperature.

Operation with 0–10 V capacity control

The 0–10 V input is only used for this system of operation and is the base of the capacity control.

This system needs a field supplied controller with a temperature sensor. The temperature sensor can be used to control any temperature:

- Suction air of the air handling unit
- Room air
- Discharge air of the air handling unit

Program the field supplied controller to generate a 0–10 V signal within conditions as listed. Also refer to the graphic and further data in this paragraph for more details.

- When target temperature is reached: 5 V
- When lower refrigerant temperature is needed: 5–10 V
- When higher refrigerant temperature is needed: 0–5 V

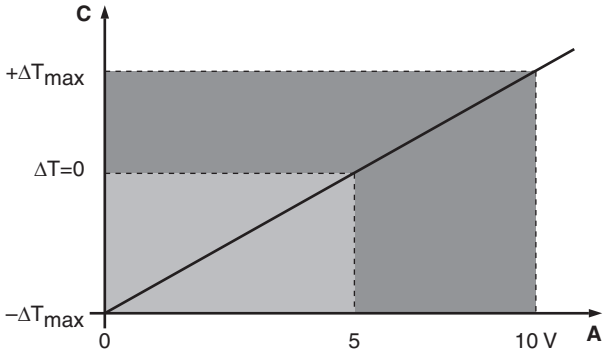

A	Controller voltage output to EKEQFCB
	Capacity increase area
	Capacity decrease area
Voltage output	= linear function with ΔT
ΔT	= [actual measured temperature] – [target temperature] When ΔT=0, the target temperature is reached.
ΔT_{max}	= maximum temperature variation as defined by installation Recommended value for ΔT_{max}=[1°C~5°C].

ΔT (°C)	$-\Delta T_{max}$	0	$+\Delta T_{max}$
Voltage output from controller (field supply)	0 V	5 V	10 V

Operation with fixed T_e/T_c temperature control

The evaporating temperature (T_e)/condensing temperature (T_c) at which the application has to operate can be set by code numbers as listed below.

Mode No.	Code No.	Description of setting(*)
13(23)–1	01	T_e = 3°C
	02	T_e = 4°C
	03	T_e = 5°C
	04	T_e = 6°C (factory setting)
	05	T_e = 7°C
	06	T_e = 8°C
	07	T_e = 9°C
	08	T_e = 10°C
13(23)–2	01	T_c = 43°C
	02	T_c = 44°C
	03	T_c = 45°C
	04	T_c = 46°C (factory setting)
	05	T_c = 47°C
	06	T_c = 48°C
	07	T_c = 49°C

(*) Depending on the operating temperature condition or on selection of the air handling unit, operation or safety activation of the outdoor unit may take priority and actual T_e/T_c will be different from the set T_e/T_c .

Operation setting in case of power failure

Measures must be taken to ensure that after power failure, T1/T2 is according to the setting of your preference. Neglecting this caution will result in improper operation.

Mode No.	Code No.	Description of setting
12(22)–5	01	T1/T2 must be open at power restore.(*)
	02	After power failure, the status of T1/T2 must remain identical to the initial T1/T2 status prior to the power failure.

(*) After power failure, T1/T2 must be changed to open (no cooling/heating requested).

Operation and display signals

For EKEQF only			
Output	C1/C2 error signal	Error: open	Abnormal operation on condenser or control system
			Power failure
		No error: closed (relay activated)	Normal operation
			T1/T2 is open: no error detection anymore
	C3/C4 operation signal	Open	Compressor not operating
		Closed	Compressor operating
	C7/C8 fan output	Open	Fan off
		Closed	Fan on
	C9/C10 defrost output	Open	No defrost operation
		Closed	Defrost operation
Input	C5/C6: capacity step	0–10 V	Only necessary for field setting 13(23)–0 = 01 0–10 V capacity control(*)
	T1/T2(†)	Open	No cooling/heating requested
		Closed	Cooling/heating requested

(*) Refer to paragraph "Operation with 0–10 V capacity control" on page 73.
(†) See field setting 12(22)–5.

For EKEQD only			
Output	C1/C2 fan output	Open	Fan off
		Closed	Fan on
Input	T1/T2(*)	Open	No cooling/heating requested
		Closed	Cooling/heating requested

(*) See field setting 12(22)–5.

- The fan of the air handling unit must operate before cooling operation is required to the outdoor unit.
- When the operation signal is activated, the air handling unit and fan must operate. Failure to this will cause a safety to operate or freezing up of the air handling unit.

Troubleshooting

To set up the system and make trouble shooting possible, it is required to connect the remote control to the option kit.

Not a malfunction of the air conditioner

The system does not operate

- The system does not restart immediately after the cooling/heating is requested.
  If the operation lamp lights, the system is in normal operating condition.
  It does not restart immediately because one of its safety devices actuates to prevent the system from being overloaded. The system will turn on again automatically after 3 minutes.
- The system does not restart immediately after the power supply is turned on.
  Wait 1 minute until the micro computer is prepared for operation.

Trouble shooting

If one of the following malfunctions occurs, take the measures shown below and contact your dealer.

The system must be repaired by a qualified service person.

- If a safety device such as a fuse, a breaker, or an earth leakage breaker frequently actuates, or ON/OFF switch does not properly work.
  Turn off the main power switch.
- If the display TEST, the unit number and the operation lamp flash and the malfunction code appears;
  Notify your dealer and report the malfunction code.

If the system does not operate properly, and none of the above mentioned malfunctions is evident, investigate the system according to the following procedures.

If the system does not operate at all

- Check if there is a power failure.
  Wait until power is restored. If power failure occurs during operation, the system automatically restarts immediately after the power supply recovers.
- Check if the fuse has blown or breaker has been tripped.
  Change the fuse or set the breaker.

If the system stops operating after operation is complete

- Check if the air inlet or outlet of outdoor or air handling unit is blocked by obstacles.
  Remove the obstacle and make it well-ventilated.
- Check if the air filter is clogged.
  Ask a qualified service person to clean the air filter.
- The error signal is given and the system stops.
  If the error resets after 5-10 minutes, the unit safety device was activated but the unit restarted after evaluation time.
  If the error persists, contact your dealer.

If the system operates but it does not sufficiently cool/heat

- Check if the air inlet or outlet of the air handling unit or the outdoor unit is blocked with obstacles.
  Remove the obstacle and make it well-ventilated.
- Check if the air filter is clogged.
  Ask a qualified service person to clean the air filter.
- Check if the doors or the windows are open.
  Shut doors or windows to prevent wind from coming in.
- Check if direct sunlight enters the room.
  Use curtains or blinds.
- Check if there are too many inhabitants in the room.
  Cooling effect decreases if heat gain of the room is too large.
- Check if the heat source of the room is excessive.
  Cooling effect decreases if heat gain of the room is too large.

The air handling unit is freezing up

- The liquid thermistor (R2T) is not put on the coldest position and part of the air handling unit is freezing up.
  Thermistor must be put on the coldest position.
- The thermistor has come loose.
  The thermistor must be fixed.
- The air handling unit fan is not operating continuously.
  When the outdoor unit stops operating, the air handling unit fan must continue operation to melt the ice that was accumulated during outdoor unit operation.
  Ensure that the air handling unit fan keeps operating.

In these cases, contact your dealer.

Maintenance

- Only a qualified service person is allowed to perform maintenance.
- Before obtaining access to terminal devices, all power supply circuits must be interrupted.
- Water or detergent may deteriorate the insulation of electronic components and result in burn-out of these components.

Disposal requirements

Dismantling of the unit, treatment of the refrigerant, of oil and of other parts must be done in accordance with relevant local and national legislation.

Notes

6. System B: EKEQM-box: Installation and Operation Manual

INSTALLATION AND OPERATION MANUAL

Option kit for combination of Daikin condensing units with field supplied air handling units

Installation and operation manual Option kit for combination of Daikin condensing units with field supplied air handling units	**English**
Installations- und Bedienungsanleitung Erweiterungsbausatz für die Verbindung von Daikin-Verflüssigern mit bauseitigen Luftbehandlungsgeräten	**Deutsch**
Manuel d'installation et d'utilisation Kit d’options pour combinaison de groupes condenseur Daikin et unités de traitement de l’air non fournies	**Français**
Montagehandleiding en gebruiksaanwijzing Optiekit voor combinatie van condensorunits van Daikin met lokaal geleverde luchtbehandelingsunits	**Nederlands**
Manual de instalación y operación Kit de opciones para la combinación de unidades de condensación Daikin con unidades de tratamiento de aire suministradas	**Español**
Manuale di installazione e d'uso Kit opzioni per la combinazione di unità di condensazione Daikin con unità per il trattamento dell’aria non in dotazione	**Italiano**
Manual de instalação e de funcionamento Kit de opções para combinação de unidades de condensação Daikin com unidades de tratamento de ar existentes no local	**Portugues**
Инструкция по монтажу и эксплуатации Комплект дополнительного оборудования для подключения конденсаторных агрегатов Daikin к приобретаемым на внутреннем рынке	***русский***
Instrukcja montażu i instrukcja obsługi Zestawy opcji dla agregatów skraplających Daikin w konfiguracji z centralami klimatyzacyjnymi dostarczanymi osobno	**polski**

EKEQMCBV3

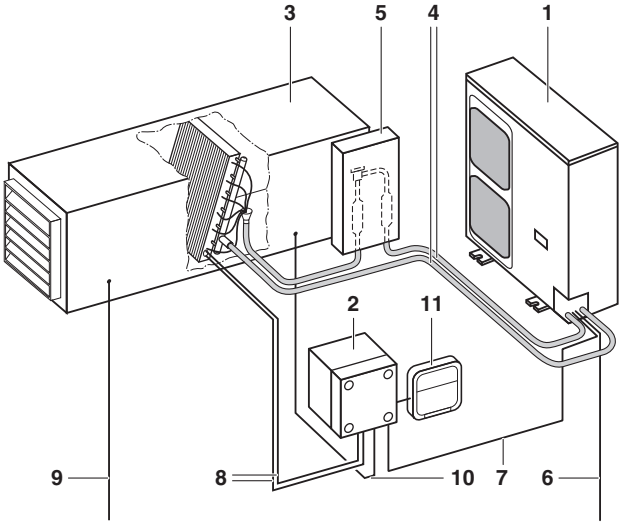
3
5
4
1
2
11
9
8
10
7
6

1

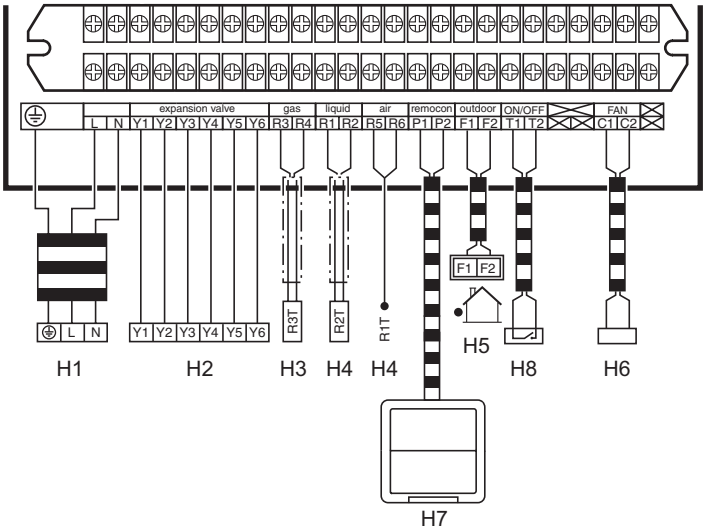
expansion valve
gas
liquid
air
remocon
outdoor
ON/OFF
FAN
L N Y1 Y2 Y3 Y4 Y5 Y6 R3 R4 R1 R2 R5 R6 P1 P2 F1 F2 T1 T2 C1 C2
F1 F2
R3T
R2T
R1T
H1
H2
H3
H4
H4
H5
H8
H6
H7

2

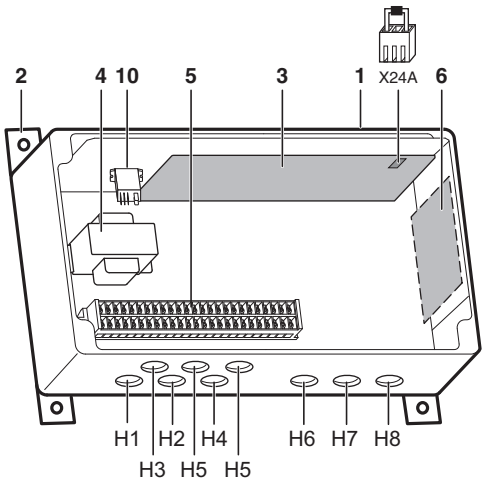
2
4
10
5
3
1
X24A
6
H1
H2
H4
H6
H7
H8
H3
H5
H5

3

NOTES

CONTENTS

Page

Introduction 79
Before installation 79

Installation 80
Accessories 80
Name and function of parts 80
Before installation 80
Selecting the installation site 81
Piping installation 81
Valve kit installation 83
Installation of the electrical control box 84
Electric wiring work 84
Installation of thermistors 86
Refrigerant piping work 87
Test operation 87

Operation and maintenance 87
What to do before operation 87
Operation and display signals 87
Troubleshooting 88
Maintenance 88
Disposal requirements 88

READ THESE INSTRUCTIONS CAREFULLY BEFORE INSTALLATION AND OPERATION.

IMPROPER INSTALLATION OR ATTACHMENT OF EQUIPMENT OR ACCESSORIES COULD RESULT IN ELECTRIC SHOCK, SHORT-CIRCUIT, LEAKS, FIRE OR OTHER DAMAGE TO THE EQUIPMENT. BE SURE ONLY TO USE ACCESSORIES MADE BY DAIKIN WHICH ARE SPECIFICALLY DESIGNED FOR USE WITH THE EQUIPMENT AND HAVE THEM INSTALLED BY A PROFESSIONAL.

IF UNSURE OF INSTALLATION PROCEDURES OR USE, ALWAYS CONTACT YOUR DAIKIN DEALER FOR ADVICE AND INFORMATION.

The English text is the original instruction. Other languages are translations of the original instructions.

INTRODUCTION

- Do only use this system in combination with a field supplied air handling unit. Do not connect this system to other appliances.
- Only optional controls as listed in the optional accessories list can be used.

BEFORE INSTALLATION

The system will operate as a standard indoor unit to control the room temperature. This system does not require a specific external controller but take below cautions into account.

- Multiple outdoor unit connections are not allowed in 1 refrigerant system.
- The automatic refrigerant charging and leak detection function are not possible when the EKEQMCB is used.
- The manufacturer of this outdoor unit has limited responsibility for total performance of the system because performance is determined by the total system. The discharge air may fluctuate depending on selected air handling unit and depending on the installation configuration.
- Do NOT connect the system to DIII-net devices:
  - intelligent touch Controller
  - intelligent Manager
  - DMS-IF
  - BACnet Gateway
  - ...

  This could result in malfunction or breakdown of the total system.
- This equipment is not designed for year-round cooling applications with low indoor humidity conditions, such as Electronic Data Processing rooms.
- This appliance is not intended for use by persons, including children, with reduced physical, sensory or mental capabilities, or lack of experience and knowledge, unless they have been given supervision or instruction concerning use of the appliance by a person responsible for their safety.
  Children should be supervised to ensure that they do not play with the appliance.

INSTALLATION

- For installation of the air handling unit, refer to the air handling unit installation manual.
- Never operate the air conditioner with the discharge pipe thermistor (R3T), suction pipe thermistor (R2T) and pressure sensors (S1NPH, S1NPL) removed. Such operation may burn out the compressor.
- The equipment is not intended for use in a potentially explosive atmosphere.

ACCESSORIES

		Quantity
Thermistor (R1T)		1
Thermistor (R3T/R2T) (2.5 m cable)		2
Insulation sheet		2
Rubber sheet		2
Wire to wire splice		6
Installation and operation manual		1
Screw nut		9
Tie wrap		6
Capacity setting adapter		8
Stopper (closing cup)		1

Obligatory accessory

	EKEQMCB
Expansion valve kit	EKEXV

Refer to chapter "Valve kit installation" for installation instructions.

Optional accessories

		EKEQMCB
Remote control		1

NAME AND FUNCTION OF PARTS (See figure 1)

Parts and components

1 Outdoor unit

2 Control box

3 Air handling unit (field supply)

4 Field piping (field supply)

5 Expansion valve kit

Wiring connections

6 Outdoor unit power supply

7 Control box wiring
(Power supply and communication between control box and outdoor unit)

8 Air handling unit thermistors

9 Power supply and control wiring for air handling unit and controller (power supply is separate from the outdoor unit)

10 Air thermistor control for air handling unit

11 Remote control

BEFORE INSTALLATION

- Refer to the installation manual of the outdoor unit for details on refrigerant piping, additional refrigerant charging, and inter-unit wiring.

Since design pressure is 4 MPa or 40 bar, pipes of larger wall thickness may be required. Refer to paragraph "Selection of piping material" on page 82.

- Precautions for R410A
  - The refrigerant requires strict cautions for keeping the system clean, dry and tight.
    - Clean and dry
      Foreign materials (including mineral oils or moisture) should be prevented from getting mixed into the system.
    - Tight
      Read "Piping installation" on page 81 carefully and follow these procedures correctly.
  - Since R410A is a mixed refrigerant, the required additional refrigerant must be charged in its liquid state. (If the refrigerant is in state of gas, its composition changes and the system will not work properly).
  - The connected air handling units must have heat exchangers designed exclusively for R410A.

Cautions for selection of the air handling unit

Select the air handling unit (field supply) according to the technical data and limitations mentioned in Table 1.

Lifetime of the outdoor unit, operation range or operation reliability may be influenced if you neglect these limitations.

This control box can only be used in heat pump applications.

NOTE

- For maximum number of indoor units, see the outdoor unit specifications.
- If the total capacity of the connected indoor units exceeds the capacity of the outdoor unit, cooling and heating performance may drop when running the indoor units.
  Refer to the section on performance characteristics in the Engineering Data Book for details.
- The capacity class of the air handling unit is determined by the selection of the expansion valve kit according to Table 1.

Depending on the heat exchanger, a connectable EKEXV (expansion valve kit) must be selected to these limitations.

Table 1

EKEXV class	Allowed heat exchanger volume (dm^3)		Allowed heat exchanger capacity (kW)	
	Minimum	Maximum	Minimum	Maximum
50	0.76	1.65	5.0	6.2
63	1.66	2.08	6.3	7.8
80	2.09	2.64	7.9	9.9
100	2.65	3.30	10.0	12.3
125	3.31	4.12	12.4	15.4
140	4.13	4.62	15.5	17.6
200	4.63	6.60	17.7	24.6
250	6.61	8.25	24.7	30.8

Saturated suction temperature (SST) = 6°C, SH (superheat) = 5 K, air temperature = 27°C DB / 19°C WB.

1 The air handling unit can be connected as a standard indoor unit to the outdoor unit. The limitations of connection are determined by the outdoor unit.

Additional limits exist when connecting the EKEQMCB control box. These can be found in the technical data book of the EKEQMCB and in this manual.

2 Selecting the expansion valve

The corresponding expansion valve needs to be selected for your air handling unit. Select the expansion valve according to the above limitations.

NOTE

- If conflicting result, capacity selection has priority over volume.
- The expansion valve is an electronic type, it is controlled by the thermistors that are added in the circuit. Each expansion valve can control a range of air handling units sizes.
- The selected air handling unit must be designed for R410A.
- Extraneous substances (including mineral oils or moisture) must be prevented from getting mixed into the system.
- SST: saturated suction temperature at exit of air handling unit.

3 Selecting the capacity setting adapter (see accessories)

- The corresponding capacity setting adapter needs to be selected depending on the expansion valve.
- Connect the correct selected capacity setting adapter to X24A (A1P). (See figure 3)

EKEXV kit	Capacity setting adapter label (indication)
50	J56
63	J71
80	J90
100	J112

EKEXV kit	Capacity setting adapter label (indication)
125	J140
140	J160
200	J224
250	J280

For the following items, take special care during construction and check after installation is finished

Tick ✓ when checked	
☐	Are the thermistors fixed firmly? Thermistor may come loose.
☐	Is the freeze-up setting done correctly? The air handling unit may freeze up.
☐	Is the control box fixed firmly? The unit may drop, vibrate or make noise.
☐	Do electrical connections comply with specifications? The unit may malfunction or components may burn out.
☐	Are wiring and piping correct? The unit may malfunction or components may burn out.
☐	Is the unit safely grounded? Dangerous at electric leakage.

Selecting the installation site

This is a class A product. In a domestic environment this product may cause radio interference in which case the user may be required to take adequate measures.

Select an installation site where the following conditions are fulfilled and that meets your customer's approval.

- The option boxes (expansion valve and electrical control box) can be installed inside and outside.
- Do not install the option boxes in or on the outdoor unit.
- Do not put the option boxes in direct sunlight. Direct sunlight will increase the temperature inside the option boxes and may reduce its lifetime and influence its operation.
- Choose a flat and strong mounting surface.
- Operating temperature of the control box is between –10°C and 40°C.
- Keep the space in front of the boxes free for future maintenance.
- Keep air handling unit, power supply wiring and transmission wiring at least 1 m away from televisions and radios. This is to prevent image interference and noise in those electrical appliances. (Noise may be generated depending on the conditions under which the electric wave is generated, even if 1 m is kept.)
- Make sure the control box is installed horizontally. Screw nuts position must be downwards.

Precautions

Do not install or operate the unit in rooms mentioned below.

- Where mineral oil, like cutting oil is present.
- Where the air contains high levels of salt such as air near the ocean.
- Where sulphurous gas is present such as that in areas of hot spring.
- In vehicles or vessels.
- Where voltage fluctuates a lot such as that in factories.
- Where high concentration of vapor or spray are present.
- Where machines generating electromagnetic waves are present.
- Where acidic or alkaline vapor is present.
- The option boxes must be installed with entrances downward.

Piping installation

Piping limits

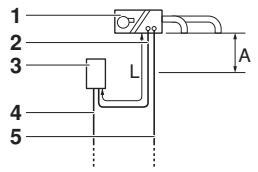

1 Air handling unit
2 Connection pipe from expansion valve kit to air handling unit
3 Valve kit
4 Liquid pipe
5 Gas pipe

	Max (m)
A	–5/+5(*)
L	5

(*) Below or above the valve kit.

L is to be considered as a part of the total maximum piping length. See installation manual of the outdoor unit for piping installation.

Piping connections

Make sure to install gas and liquid pipe diameters in function of the air handling unit capacity class.

Air handling unit capacity class	Gas pipe	Connection pipe Liquid pipe
50	Ø12.7	Ø6.4
63	Ø15.9	Ø9.52
80		
100		
125		
140		
200	Ø19.1	
250	Ø22.2	

Selection of piping material

1. Foreign materials inside pipes (including oils for fabrication) must be 30 mg/10 m or less.
2. Use the following material specification for refrigerant piping:
   - Construction material: phosphoric acid deoxidized seamless copper for refrigerant.
   - Temper grade: use piping with temper grade in function of the pipe diameter as listed in the table below.

Pipe Ø	Temper grade of piping material
≤ 15.9	O
≥ 19.1	1/2H

O = Annealed
1/2H = Half hard

   - The pipe thickness of the refrigerant piping should comply with relevant local and national regulations. The minimal pipe thickness for R410A piping must be in accordance with the table below.

Pipe Ø	Minimal thickness t (mm)
6.4	0.80
9.5	0.80
12.7	0.80
15.9	0.99
19.1	0.80
22.2	0.80

3. In case the required pipe sizes (inch sizes) are not available, it is also allowed to use other diameters (mm sizes), taken the following into account:
   - select the pipe size nearest to the required size.
   - use the suitable adapters for the change-over from inch to mm pipes (field supply).

Cautions for brazing

- Be sure to carry out a nitrogen blow when brazing.
  Brazing without carrying out nitrogen replacement or releasing nitrogen into the piping will create large quantities of oxidized film on the inside of the pipes, adversely affecting valves and compressors in the refrigerating system and preventing normal operation.
- When brazing while inserting nitrogen into the piping, nitrogen must be set to 0.02 MPa with a pressure-reducing valve (=just enough so that it can be felt on the skin).

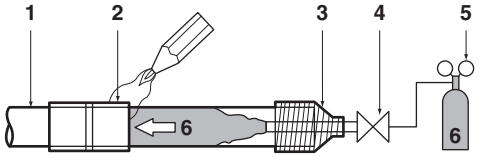

1 Refrigerant piping
2 Part to be brazed
3 Taping
4 Hands valve
5 Pressure-reducing valve
6 Nitrogen

- For details, see manual of the outdoor unit.

VALVE KIT INSTALLATION

Mechanical installation

1 Remove the valve kit box cover by unscrewing 4x M5.

2 Drill 4 holes on correct position (measurements as indicated in figure below) and fix the valve kit box securely with 4 screws through the provided holes Ø9 mm.

NOTE

- Make sure that the expansion valve is installed vertically.
- Make sure there is enough free space for future maintenance.

Brazing work

For details, see manual of the outdoor unit.

3 Prepare the inlet/outlet field piping just in front of the connection (do **not** braze yet).

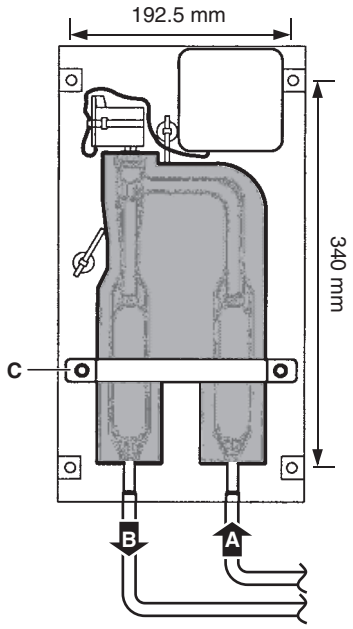

A	Inlet coming from the outdoor unit
B	Outlet to air handling unit
C	Pipe fixing clamp

4 Remove the pipe fixing clamp (C) by unscrewing 2x M5.

5 Remove the upper and lower pipe insulations.

6 Braze the field piping.

- Make sure to cool the filters and valve body with a wet cloth and make sure the body temperature does not exceed 120°C during brazing.
- Make sure that the other parts such as electrical box, tie wraps and wires are protected from direct brazing flames during brazing.

7 After brazing, put the lower pipe insulation back in place and close it with the upper insulation cover (after pealing off the liner).

8 Secure the pipe fixing clamp (C) in place again (2x M5).

9 Make sure that field pipes are fully insulated.

Field pipe insulation must reach up to the insulation you have put back in place as per procedure step 7. Make sure that there is no gap between both ends in order to avoid condensation dripping (finish the connection with tape eventually).

Electrical work

1 Open the electrical box cover (A).

2 Push out **ONLY** the second lower wire intake hole (B) from inside to outside. Do not damage the membrane.

3 Pass valve cable (with wires Y1 ... Y6) from the control box through that membrane wire intake hole and connect the cable wires into the terminal connector (C) following instructions as described in step 4. Route the cable out of the valve kit box according to figure below and fix with the tie wrap (D). See "Electric wiring work" on page 84 for more details.

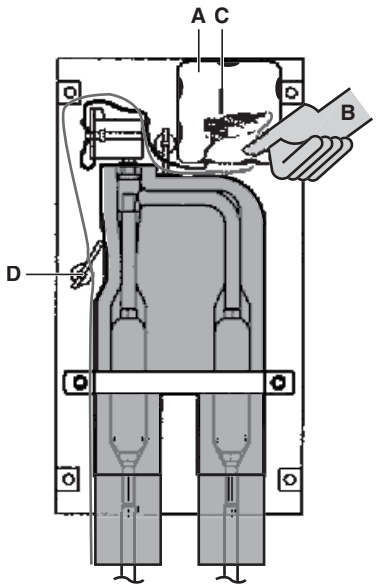

4 Use a small screwdriver and follow indicated instructions for connecting cable wires into the terminal connector according to the wiring diagram.

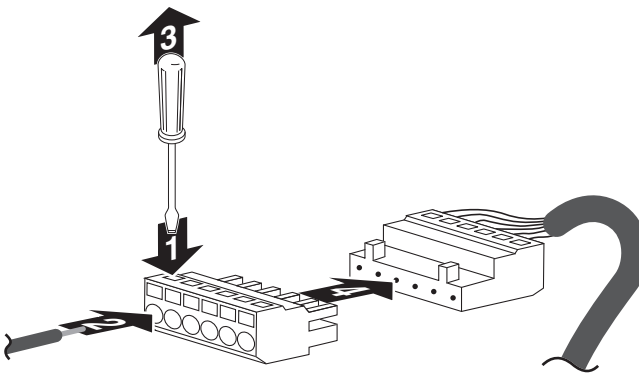

5 Make sure that field wiring and insulation is not squeezed when closing the valve kit box cover.

6 Close the valve kit box cover (4x M5).

Installation of the electrical control box (See figure 3)

1 Control box
2 Hanger brackets
3 Main PCB
4 Transformer
5 Terminal
6 Optional PCB (KRP4)

Mechanical installation

1 Fix the control box with its hanger brackets to the mounting surface.
Use 4 screws (for holes of Ø6 mm).

2 Open the lid of the control box.

3 For electrical wiring: refer to paragraph "Electric wiring work" on page 84.

4 Install the screw nuts.

5 Close the unnecessary openings with stoppers (closing cups).

6 Close the lid securely after installation to ensure that the control box is watertight.

Electric wiring work

- All field supplied parts and materials and electric works must be conform to local codes.
- Use copper wire only.
- All wiring must be performed by an authorized electrician.
- A main switch or other means for disconnection, having a contact separation in all poles, must be incorporated in the fixed wiring in accordance with relevant local and national legislation.
- Refer to the installation manual attached to the outdoor unit for the size of power supply electric wire connected to the outdoor unit, the capacity of the circuit breaker and switch, wiring and wiring instructions.
- Attach the earth leakage circuit breaker and fuse to the power supply line.

Connection of the wires inside the control box

1 For connection to outdoor unit and to controller (field supply):
Pull the wires inside through the screw nut and close the nut firmly in order to ensure a good pull relieve and water protection.

2 The cables require an additional pull-relief. Strap the cable with the installed tie wrap.

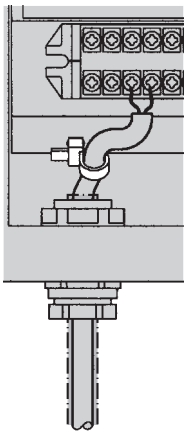

Precautions

- Thermistor cable and remote control wire should be located at least 50 mm away from power supply wires and from wires to the controller. Not following this guideline may result in malfunction due to electrical noise.
- Use only specified wires, and tightly connect wires to the terminals. Keep wiring in neat order so that it does not obstruct other equipment. Incomplete connections could result in overheating, and in worse case electric shock or fire.

Connecting the wiring: EKEQMCBV3

- Connect the wires to the terminal board according to the wiring diagram in figure 2. See figure 3 for wiring intake in the control box. The wiring intake hole indication H1 refers to the H1 cable of the corresponding wiring diagram. There are 2 wiring intake holes to allow for branching of the communication wire.
- Connect cables according to specifications of the next table.

Table connection and application

	Description	Connect to	Type of cable	Cross section (mm^2)(*)	Maximum length (m)	Specifications
L, N, earth	Power supply	Power supply	H05VV-F3G2.5	2.5	—	Power supply 230 V 1~ 50 Hz
Y1~Y6	Expansion valve connection	Expansion valve kit	LIYCY3 x 2 x 0.75	0.75	20	Digital output 12 V DC
R1,R2	Thermistor R2T (liquid pipe)	—	H05VV-F2 x 0.75		Standard: 2.5 Max.: 20	Analog input 16 V DC
R3,R4	Thermistor R3T (gas pipe)					
R5,R6	Thermistor R1T (air)					
P1,P2	Remote control				100	Communication line 16 V DC
F1,F2	Communication to outdoor unit	Outdoor unit				
T1,T2	ON/OFF	Controller field supply			—	Digital input 16 V DC
—	Capacity step		LIYCY4 x 2 x 0.75	Optional connection: when the function of the switch box needs to be extended: see KRP4A51 for details of settings and instructions.		
—	Error signal					
—	Operation signal					
C1,C2	Fan signal	Air handling unit fan field supply	H05VV-F3G2.5	2.5	—	Digital output: voltage free. Maximum 230 V, maximum 2 A

(*) Recommended size (all wiring must comply with local codes).

Wiring diagram

A1P.....Printed circuit board
A2P.....Printed circuit board (option KRP4)
F1U.....Fuse (250 V, F5A)(A1P)
F3U.....Field fuse
HAP .....Light emitting diode (service monitor-green)
K1R.....Magnetic relay
K4R.....Magnetic relay (fan)
Q1DI .....Earth leakage breaker
R1T .....Thermistor (air)
R2T.....Thermistor (liquid)
R3T.....Thermistor (gas)
R7 .....Capacity adapter
T1R.....Transformer (220 V/21.8 V)
X1M,X3M.....Terminal block
Y1E.....Electronic expansion valve
X1M-C1/C2.....Output: fan ON/OFF
X1M-F1/F2.....Communication outdoor unit
X1M-P1/P2 .....Communication remote control
X1M-R1/R2.....Thermistor liquid
X1M-R3/R4.....Thermistor gas
X1M-R5/R6.....Thermistor air
X1M-T1/T2.....Input: ON/OFF
X1M-Y1~6 .....Expansion valve

::■■■■:: ..... Field wiring
L..... Live
N ..... Neutral
, ... Connector
∘ ..... Wire clamp
..... Protective earth (screw)
—·— ..... Separate component
═:═ ..... Optional accessory
BLK..... Black
BLU..... Blue
BRN ..... Brown
GRN..... Green
GRY ..... Gray
ORG ..... Orange
PNK ..... Pink
RED ..... Red
WHT ..... White
YLW ..... Yellow

Installation of thermistors

Refrigerant thermistors

Location of the thermistor

A correct installation of the thermistors is required to ensure a good operation:

1. Liquid (R2T)
   Install the thermistor behind the distributor on the coldest pass of the heat exchanger (contact your heat exchanger dealer).
2. Gas (R3T)
   Install the thermistor at the outlet of the heat exchanger as close as possible to the heat exchanger.

Evaluation must be done to check if the air handling unit is protected against freeze-up.

Execute test operation and check for freeze-up.

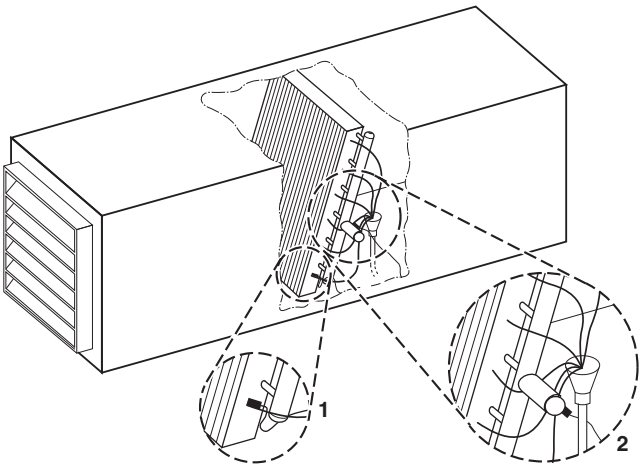

1 Liquid R2T

2 Gas R3T

Installation of the thermistor cable

1 Put the thermistor cable in a separate protective tube.

2 Always add a pull-relief to the thermistor cable to avoid strain on the thermistor cable and loosening of the thermistor. Strain on the thermistor cable or loosening of the thermistor may result in bad contact and incorrect temperature measurement.

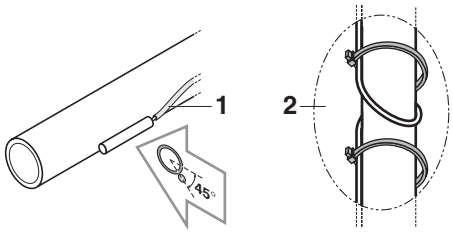

Fixation of the thermistor

- Put the thermistor wire slightly down to avoid water accumulation on top of the thermistor.

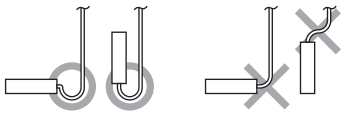

- Make good contact between thermistor and air handling unit. Put the top of the thermistors on the air handling unit, this is the most sensitive point of the thermistor.

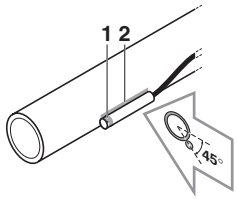

1 Most sensitive point of the thermistor

2 Maximize the contact

1 Fix the thermistor with insulating aluminum tape (field supply) in order to ensure a good heat transference.

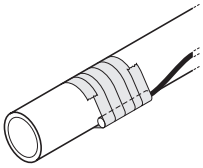

2 Put the supplied piece of rubber around the thermistor (R2T/R3T) in order to avoid loosening of the thermistor after some years.

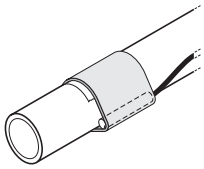

3 Fasten the thermistor with 2 tie wraps.

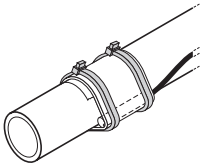

4 Insulate the thermistor with the supplied insulation sheet.

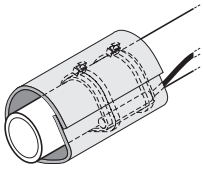

Air thermistor

The air thermistor (R1T) can be installed either in the room that needs temperature control or in the suction area of the air handling unit.

NOTE For room temperature control the delivered thermistor (R1T) can be replaced by an optional remote sensor kit KRCS01-1(A) (to be ordered separately).

Installation of longer thermistor cable (R1T/R2T/R3T)

The thermistor is supplied with a standard cable of 2.5 m. This cable can be made longer to up to 20 m.

Install the longer thermistor cable with the delivered wire to wire splices

1. Cut the wire or bundle the remainder of the thermistor cable.
   Keep at least 1 m of the original thermistor cable.
   Do not bundle the cable inside the control box.
2. Strip the wire ±7 mm at both ends and insert these ends into the wire to wire splice.
3. Pinch the splice with the correct crimp tool (pliers).
4. After connection, heat up the shrink-insulation of the wire to wire splice with a shrink-heater to make a water tight connection.
5. Wrap electrical insulation tape around the connection.
6. Put a pull-relief in front of and behind the connection.

- The connection must be made on an accessible location.
- To make the connection waterproof, the connection can also be made in a switch box or connector box.
- The thermistor cable should be located at least 50 mm away from power supply wire. Not following this guideline may result in malfunction due to electrical noise.

REFRIGERANT PIPING WORK

All field piping must be provided by a licensed refrigeration technician and must comply with the relevant local and national codes.

- For refrigerant piping of outdoor unit, refer to the installation manual supplied with the outdoor unit.
- Follow the outdoor unit specifications for additional charging, piping diameter and installation.
- The maximum allowed piping length depends on the connected outdoor model.

TEST OPERATION

Before executing "test operation" as well as before operating the unit, you must check the following:

- Refer to the section of "For the following items, take special care during construction and check after installation is finished" on page 81.
- After finishing the construction of refrigerant piping, drain piping and electric wiring, conduct test operation accordingly to protect the unit.
- Open the gas side stop valve.
- Open the liquid side stop valve.

Executing the test operation

1. Close the contact T1/T2 (ON/OFF).
2. Confirm function of the unit according to the manual and check if the air handling unit has collected ice (freeze-up).
   If the unit collects ice: see "Troubleshooting" on page 88.
3. Confirm that the fan of the air handling unit is ON.

- In case of poor distribution in the air handling unit, 1 or more passes of the air handling unit may freeze-up (collect ice) → put the thermistor (R2T) on this position.
- Depending on operation conditions (e.g.: outdoor ambient temperature) it is possible that the settings must be changed after commissioning.

OPERATION AND MAINTENANCE

If T1/T2 is applicable:

- Closing the T1/T2 signal starts operation of the air handling unit.
- Opening the T1/T2 signal stops operation of the air handling unit.

WHAT TO DO BEFORE OPERATION

- Before initiating operation, contact your dealer to get the operation manual that corresponds to your system.
- Refer to the dedicated manual of the controller (field supply) and air handling unit (field supply).
- Make sure that the air handling unit fan is ON when the outdoor unit is in normal operation.

Field settings for EKEQMCB

Refer to the installation manuals of both the outdoor unit and the remote control.

Operation setting in case of power failure

Measures must be taken to ensure that after power failure, T1/T2 is according to the setting of your preference. Neglecting this caution will result in improper operation.

Mode No.	Code No.	Description of setting
12(22)–5	01	T1/T2 must be open at power restore.(*)
	02	After power failure, the status of T1/T2 must remain identical to the initial T1/T2 status prior to the power failure.

(*) After power failure, T1/T2 must be changed to open (no cooling/heating requested).

OPERATION AND DISPLAY SIGNALS

Input	T1/T2(*)	Open	No cooling/heating requested
		Closed	Cooling/heating requested

(*) See field setting 12(22)–5.

NOTE

- See the remote control display for output.
- See optional kit KRP4A51 for additional possible signals.

When the operation signal is activated, the air handling unit and fan must operate. Failure to this will cause a safety to operate or freezing up of the air handling unit.

TROUBLESHOOTING

To set up the system and make trouble shooting possible, it is required to connect the remote control to the option kit.

Not a malfunction of the air conditioner

The system does not operate

- The system does not restart immediately after the cooling/heating is requested.
  If the operation lamp lights, the system is in normal operating condition.
  It does not restart immediately because one of its safety devices actuates to prevent the system from being overloaded. The system will turn on again automatically after 3 minutes.
- The system does not restart immediately after the power supply is turned on.
  Wait 1 minute until the micro computer is prepared for operation.

Trouble shooting

If one of the following malfunctions occurs, take the measures shown below and contact your dealer.

The system must be repaired by a qualified service person.

- If a safety device such as a fuse, a breaker, or an earth leakage breaker frequently actuates, or ON/OFF switch does not properly work.
  Turn off the main power switch.
- If the display TEST, the unit number and the operation lamp flash and the malfunction code appears;
  Notify your dealer and report the malfunction code.

If the system does not operate properly, and none of the above mentioned malfunctions is evident, investigate the system according to the following procedures.

If the system does not operate at all

- Check if there is a power failure.
  Wait until power is restored. If power failure occurs during operation, the system automatically restarts immediately after the power supply recovers.
- Check if the fuse has blown or breaker has been tripped.
  Change the fuse or set the breaker.

If the system stops operating after operation is complete

- Check if the air inlet or outlet of outdoor or air handling unit is blocked by obstacles.
  Remove the obstacle and make it well-ventilated.
- Check if the air filter is clogged.
  Ask a qualified service person to clean the air filter.
- The error signal is given and the system stops.
  If the error resets after 5-10 minutes, the unit safety device was activated but the unit restarted after evaluation time.
  If the error persists, contact your dealer.

If the system operates but it does not sufficiently cool/heat

- Check if the air inlet or outlet of the air handling unit or the outdoor unit is blocked with obstacles.
  Remove the obstacle and make it well-ventilated.
- Check if the air filter is clogged.
  Ask a qualified service person to clean the air filter.
- Check if the doors or the windows are open.
  Shut doors or windows to prevent wind from coming in.
- Check if direct sunlight enters the room.
  Use curtains or blinds.
- Check if there are too many inhabitants in the room.
  Cooling effect decreases if heat gain of the room is too large.
- Check if the heat source of the room is excessive.
  Cooling effect decreases if heat gain of the room is too large.

The air handling unit is freezing up

- The liquid thermistor (R2T) is not put on the coldest position and part of the air handling unit is freezing up.
  Thermistor must be put on the coldest position.
- The thermistor has come loose.
  The thermistor must be fixed.
- The air handling unit fan is not operating continuously.
  When the outdoor unit stops operating, the air handling unit fan must continue operation to melt the ice that was accumulated during outdoor unit operation.
  Ensure that the air handling unit fan keeps operating.

In these cases, contact your dealer.

MAINTENANCE

- Only a qualified service person is allowed to perform maintenance.
- Before obtaining access to terminal devices, all power supply circuits must be interrupted.
- Water or detergent may deteriorate the insulation of electronic components and result in burn-out of these components.

DISPOSAL REQUIREMENTS

Dismantling of the unit, treatment of the refrigerant, of oil and of other parts must be done in accordance with relevant local and national legislation.

Part 6
Test Operation

1. Test Operation 90
   1.1 Installation Process 90
   1.2 Procedure and Outline 91
   1.3 Operation When Power is Turned On 104
2. Outdoor Unit PC Board Layout 105
3. Field Setting 106
   3.1 Field Setting from Remote Control 106
   3.2 Field Setting from Outdoor Unit 114

1. Test Operation

1.1 Installation Process

Below Figure shows the installation process. Install in the order of the steps shown.

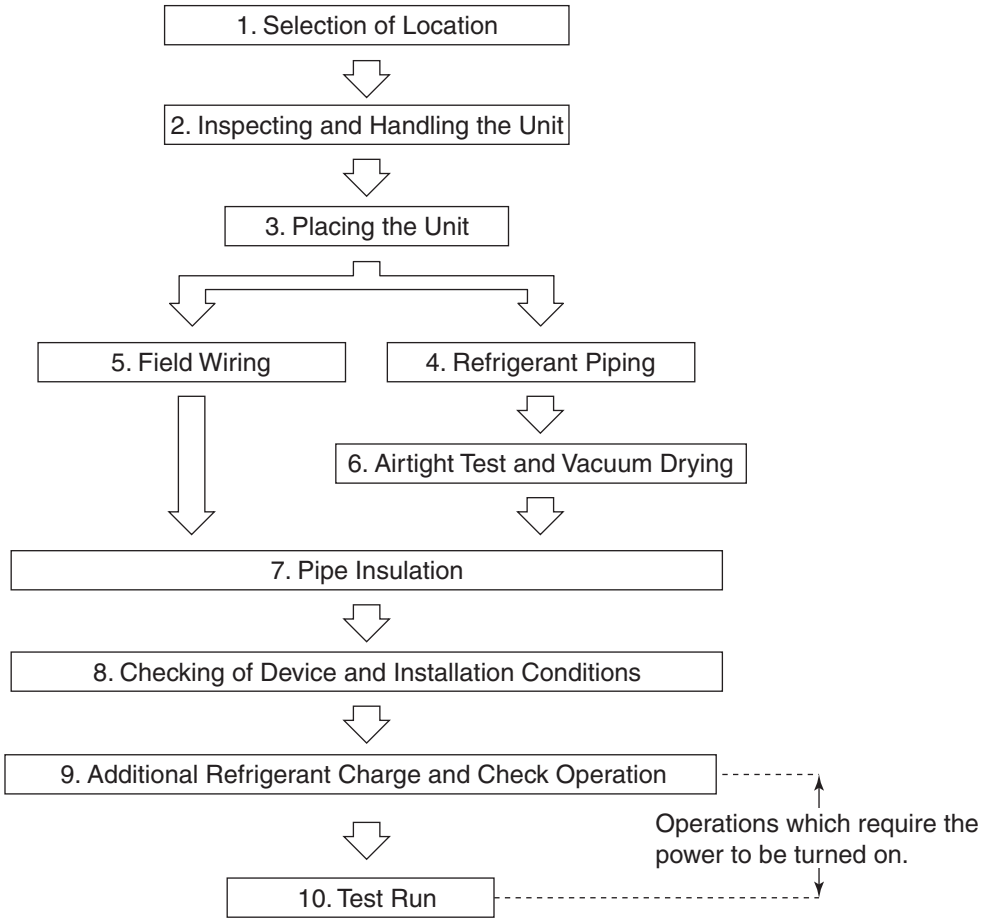

1.2 Procedure and Outline

Follow the following procedure to conduct the initial test operation after installation.

1.2.1 Check work prior to turn power supply on

Check the below items.
- Power wiring
- Control transmission wiring between units
- Earth wire

⇩

○ Is the wiring performed as specified?
○ Is the designated wire used?
○ Is the wiring screw of wiring not loose?
○ Is the grounding work completed?
○ Is the insulation of the main power supply circuit deteriorated?
Use a 500V megger tester to measure the insulation. (*1)
- Do not use a megger tester for other circuits than 380V (or 415V) circuit.

*1:Measure to be taken against decreased insulation resistance in the compressor
If the compressor is left to stand for an extended period of time after the refrigerant charge with the stop valve open and the power supply OFF, the refrigerant may be mixed in the compressor, thus decreasing the insulation resistance.
Heat the compressor as shown on the right and then recheck the insulation.

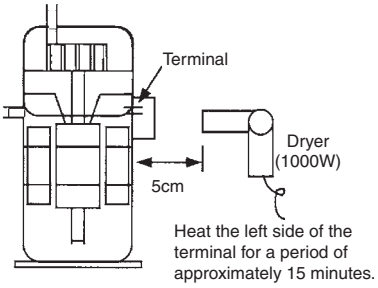

Check on refrigerant piping / insulation materials

⇩

○ Is the pipe size proper?
○ Is the pipe insulation material installed securely?
Liquid and gas pipes need to be insulated. (Otherwise causes water leak.)

Check airtight test and vacuum drying.

⇩

○ Have the airtight test and the vacuum drying been conducted according to the procedure in the Installation Manual?

Check on amount of refrigerant charge

⇩

○ Is a proper quantity of refrigerant refilled?
The following two methods are available for refilling of the refrigerant.
(1) Use the automatic refrigerant refilling function.
(2) Calculate a refrigerant refilling quantity.

Check the stop valves for conditions.

○ Check to be sure the stop valves are under the following conditions.

Liquid-side stop valve	Gas-side stop valve
Open	Open

1.2.2 Turn power on

Turn outdoor unit and AHU power on.

○ Be sure to turn the power on 6 hours before starting operation to protect compressors. (to power on clankcase heater)

Check the LED display of the outdoor unit PC board.

○ Check to be sure the transmission is normal.
The transmission is normal if the LEDs display conditions as shown in table below.

LED display ○ON ●OFF ◑Blinking

LED display (Default status before delivery)	Micro-computer operation monitor	MODE	TEST	COOL / HEAT select			Low noise	Demand	Multi
				IND	MASTER	SLAVE			
	HAP	H1P	H2P	H3P	H4P	H5P	H6P	H7P	H8P
One outdoor unit installed	◑	●	●	○	●	●	●	●	●

Make field settings with outdoor unit PC board.

Conduct check operations.

The check operations shown below will be automatically initiated.

- Check for erroneous wirings
- Check for failure to open stop valves
- Check for excessive refrigerant refilling
- Automatic judgment of piping length

Check for normal operation.

○ Before starting the normal operation after the completion of check operations, make sure AHU and outdoor unit normally operate.

1.2.3 Air Tight Test and Vacuum Drying

Note:

- Always use nitrogen gas for the airtightness test.
- Absolutely do not open the shutoff valve until the main power circuit insulation measurement has been completed. (measuring after the shutoff valve is opened will cause the insulation value to drop.)

1.2.3.1 Preparations

<Needed tools>

Gauge manifold Charge hose valve	• To prevent entry of any impurities and insure sufficient pressure resistance, always use the special tools dedicated for R-410A. • Use charge hose that have pushing stick for connecting to service port of shutoff valves or refrigerant charge port.
Vacuum pump	• The vacuum pump for vacuum drying should be able to lower the pressure to –100.7kPa (5 Torr –755mm Hg). • Take care the pump oil never flow backward into the refrigerant pipe during the pump stops.

<The system for air tight test and vacuum drying>

- Referring to figure 28, connect an nitrogen tank, refrigerant tank, and a vacuum pump to the outdoor unit.
- The shutoff valve and valve A~C in figure 28 should be open or closed as shown in the table below.

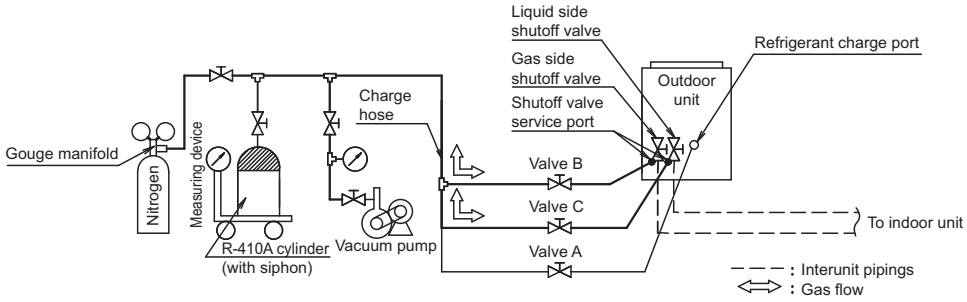

fig. 28

of valve A, B and C and shutoff valves	Valve			shutoff valve	
	A	B	C	Liquid side	Gas side
Air tight test, Vacuum drying (Close valve A and shutoff valves certainly. Otherwise the refrigerant in the unit are released.)	Close	Open	Open	Close	Close

Note:

- The airtightness test and vacuum drying should be done using the liquid side and gas side shutoff valve service ports.
  See the [R-410A] Label attached to the front plate of the outdoor unit for details on the location of the service port (see figure at right).
- See **[Shutoff valve operation procedure]** for details on handling the shutoff valve.
- The refrigerant charge port is connected to unit pipe.
  When shipped, the unit contains refrigerant, so use caution when attaching the charge hose.

1.2.3.2 Air Tight Test and Vacuum Drying Method

After finished piping work, carry out air tight test and vacuum drying.

<Air tight test>

Pressurize the liquid and gas pipes to 4.0MPa (40bar) (do not pressurize more than 4.0MPa (40bar)). If the pressure does not drop within 24 hours, the system passes the test.
If there is a pressure drop, check for leaks, make repairs, and perform the airtight test again.

<Vacuum drying>

Evacuate the system from the liquid and gas pipes by using a vacuum pump for more than 2 hours and bring the system to –100.7kPa or less. After keeping the system under that condition for more than 1 hour, check if the vacuum gauge rises or not. If it rises, the system may either contain moisture inside or have leaks.

Note:

- **If moisture might enter the piping, follow belows.**
  (I.e., if doing work during the rainy season, if the actual work takes long enough that condensation may form on the inside of the pipes, if rain might enter the pipes during work, etc.)

1. After performing the vacuum drying for two hours, pressurize to 0.05 MPa (i.e., vacuum breakdown) with nitrogen gas, then depressurize down to –100.7 kPa for an hour using the vacuum pump (vacuum drying).
2. If the pressure does not reach –100.7 kPa even after depressurizing for at least two hours, repeat the vacuum breakdown - vacuum drying process.

After vacuum drying, maintain the vacuum for an hour and make sure the pressure does not rise by monitoring with a vacuum gauge.

1.2.4 Additional Refrigerant Charge and Check Operation

Maximum piping length is 55 m. For calculation of additional refrigerant charge, we refer to the installation manual.

1.2.4.1 Before Working

[About the refrigerant cylinder]

Check whether the cylinder has a siphon pipe before charging and place the cylinder so that the refrigerant is charged in liquid form. (See the figure below.)

With siphon pipe	
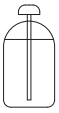	Stand the cylinder upright and charge. (The siphon pipe goes all the way inside, so the cylinder does not need be put upside-down charge in liquid form.)
Other tanks	
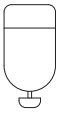	Stand the cylinder upside-down and charge.

Caution

- Always use the proper refrigerant (R-410A). If charged with the refrigerant containing an improper material, it may cause an explosion or accident.
- R-410A is a mixed refrigerant, so charging it as a gas will cause the refrigerant composition to change, which may prevent normal operation.

[Shutoff Valve Operation Procedure]

When operating the shutoff valve, follow the procedure instructed below.

Note:

- Do not open the shutoff valve until “1.2.1 Check work prior to turn power supply on” in page 91 are completed. If the shutoff valve is left open without turning on the power, it may cause refrigerant to buildup in the compressor, leading insulation degradation.
- Be sure to use the correct tools.
- The shutoff valve is not a back-seat type. If forced it to open, it might break the valve body.
- When using a service port, use the charge hose.
- After tightening the cap, make sure no refrigerant gas is leaking.

[Tightening torque]

The sizes of the shutoff valves on each model and the tightening torque for each size are listed in the table below.

<Size of Shutoff Valve>

	5HP type	8HP type	10HP type	12HP type	14HP type	16HP type	18HP type
Liquid side shutoff valve	ϕ 9.5 The 12HP type corresponds to the 12.7-diameter onsite piping using the included piping.				ϕ 12.7 The 18HP type corresponds to the 15.9-diameter onsite piping using the accessory pipe.		
Gas side shutoff valve	ϕ 15.9	ϕ 19.1	ϕ 25.4 The 10HP type corresponds to the 22.2-diameter onsite piping using the accessory pipe. The 12 ~ 18HP type corresponds to the 28.6-diameter onsite piping using the accessory pipe.				

<Tightening torque>

Shutoff valve size	Tightening torque N·m (Turn clockwise to close)			
	Shaft (valve body)		Cap (valve lid)	Service port
ϕ 9.5	5.4 - 6.6	Hexagonal wrench 4 mm	13.5 - 16.5	11.5 - 13.9
ϕ 12.7	8.1 - 9.9		18.0 - 22.0	
ϕ 15.9	13.5 - 16.5	Hexagonal wrench 6 mm	22.5 - 27.5	
ϕ 19.1	27.0 - 33.0	Hexagonal wrench 8 mm		
ϕ 25.4				

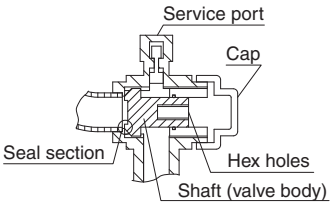

fig 34

[To open]

1. Remove the cap and turn the shaft counterclockwise with the hexagon wrench (JISB4648).
2. Turn it until the shaft stops.
3. Make sure to tighten the cap securely.
   (For the tightening torque, refer to the item <Tightening Torque>.)

[To close]

1. Remove the cap and turn the shaft clockwise with the hexagon wrench (JISB4648).
2. Securely tighten the valve until the shaft contacts the main body seal.
3. Make sure to tighten the cap securely.
   (For the tightening torque, refer to the item <Tightening Torque>.)

1.2.4.2 Procedure of Adding Refrigerant Charging and Check Operation

Warning **Electric Shock Warning**

- Make sure to close the EL. COMPO. BOX lid before turning on the power when performing the refrigerant charging operation.
- Perform the setting on the PC-board (A1P) of the outdoor unit and check the LED display after the power is on via the inspection door which is in the EL. COMPO. BOX lid.
- Use an insulated rod to operate the push buttons via the EL. COMPO. BOX's inspection door.
  There is a risk of electric shock if you touch any live parts, since this operation must be performed with the power on.

Caution

- Make sure to use the protect tool (protective groves and goggles) when charging the refrigerant.
- Due to a danger of liquid hammer, the refrigerant must not be charged over the allowable maximum amount when charging the refrigerant.
- Do not perform the refrigerant charging operation under working for the AHU.
- When opening the front panel, make sure to take caution to the fan rotation during the working.
  After the outdoor unit stops operating, the fan may keep rotation for a while.

Note:

- If operation is performed within 12 minutes after the AHU and outdoor units are turned on, H2P will be lit on and the compressor will not operate.
- In order to ensure uniform refrigerant distribution, it may take up to around 10 minutes for the compressor to start up after the unit starting operating. This is not a malfunction.

<About refrigerant charging>

- The refrigerant charge port is connected to the piping inside the unit.
  When the unit is shipped from the factory, the unit's internal piping is already charged with refrigerant, so be careful when connecting the charge hose.
- After adding the refrigerant, make sure to close the lid of the refrigerant charging port.
  The tightening torque for the lid is 11.5 to 13.9 Nm.
- See [Shutoff valve operation procedure] in 1.2.4.1 for details on how to handle shutoff valves.
- When done or when pausing the refrigerant charging operation, close the valve of the refrigerant tank immediately. If the tank is left with the valve open, the amount of refrigerant which is properly charged may be off the point. More refrigerant may be charged by any remaining pressure after the machine is stopped.

<About check operation>

- Make sure to perform the check operation after installation. Otherwise, the malfunction code "U3" will be displayed and normal operation cannot be performed.
  And the failure of "Check of miswiring" may also cause abnormal operation. Performance may drop due to the failure of "Judgment of piping length".
- The check operation cannot be performed in recovery or other service modes.

1. Make sure the following works are complete in accordance with the installation manual.
   - Piping work
   - Wiring work
   - Air tight test
   - Vacuum drying
   - Installation work for AHU
2. Calculate the "additional charging amount" using the installation manual.

3. Open the valve C (See the figure 31. The valve A, B and the liquid and gas side shutout valve must be left closed), and charge the refrigerant of the “additional charging amount” from the liquid side shutout valve service port.
   If the “additional charging amount” was charged fully, close the valve C and go to step 5.
   If the “additional charging amount” was not charged fully, go to step 4.

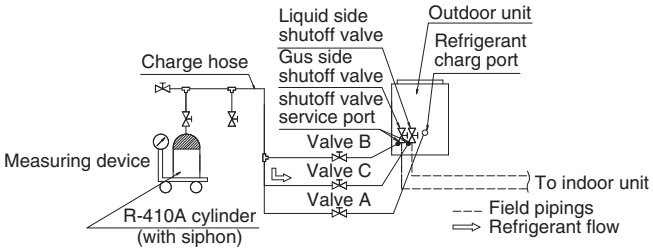

fig 31

4. Perform the refrigerant charging operation following [Refrigerant charging operation procedure], and charge the remaining refrigerant of the “additional charging amount”. For performing the refrigerant charging operation the push button on the PC-board (A1P) of outdoor unit are use. (See the figure 32) In addition, the refrigerant are charged from the refrigerant charge port via the valve A.
   For operating the push button and opening and closing the valve, follow the work procedure.

Note:
The refrigerant will be charged about 22kg in one hour at outdoor temp. 30°C DB (6kg at 0°C DB).

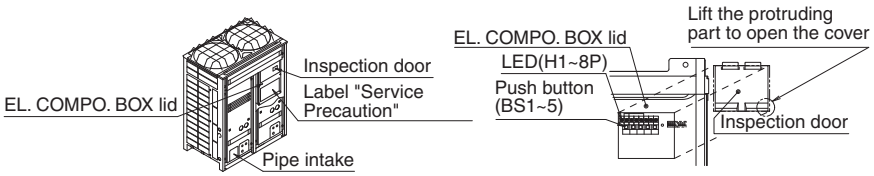

fig 32

[Refrigerant Charging Operation Procedure]

STEP1 Open the liquid and gas side shutoff valves (The valve A~C must be closed. The valve A~C means the valves in the figure 33.)

[Display of normal system]

LED display (Default status of shipped)	SERV. MONI-TOR	MODE	TEST/ HWL	C/H SELECTOR			L.N.O.P	DE-MAND	MULTI
				IND	MASTER	SLAVE			
	HAP	H1P	H2P	H3P	H4P	H5P	H6P	H7P	H8P
Single system	◐	●	●	☼	●	●	●	●	●

LED display: ●...OFF, ☼...ON, ◐...Blinking

STEP2 If necessary, set the field setting by using the dip switch on the outdoor unit PC-board(A1P).

STEP3 • Close the EL. COMPO. BOX lid and all front panel except on the side of the EL. COMPO. BOX (*1) and turn the power to the outdoor unit and all connected AHU. (*2)

• After H2P stop blinking (about 12 minutes after turning on the power), check LED displays as shown in the table [Display of normal system] and the system is normal state.
If H2P is blinking, check the malfunction code in the remote control, and correct the malfunction in accordance with [Remote control display malfunction code] in page 100.

(*1) Lead the refrigerant charge hose etc from the pipe intake. All front panels must be closed at the procedure (9).

(*2) • If you perform the refrigerant charging operation within the refrigerant system that have
the power off unit, the operation cannot finish properly.
For confirming the number of the outdoor and AHUs with the power on, see [How to check how many units are connected] in chapter 1.2.4.1. In case of a multi system,
turn on the power to all outdoor units in the refrigerant system.

• To energize the crankcase heater, make sure to turn on for 6 hours before starting operation.

STEP4 Start the additional refrigerant charge operation.
(About the system settings for additional refrigerant charge operation, refer to the [Service Precaution] label attached on the EL. COMPO. BOX lid in the outdoor unit.)
Open valve A immediately after starting the compressor.

STEP5 Close the valve A if the “additional charging amount” of refrigerant was charged, and push the RETURN button (BS3) once.

STEP6 Record the charging amount on the accessory “REQUEST FOR THE INDICATION” label and attach it to the back side of the front panel.

5. After completing the additional refrigerant charging perform the check operation following below

NOTE:

- For check operation, the following work will be performed.
  - Check of shutoff valve opening
  - Check of miswiring
  - Judgment of piping length
  - Check of refrigerant overcharge
- It takes about 40 minutes to complete the check operation.

[Check Operation Procedure]

STEP1 Make the onsite setting as needed using the dip switches on the outdoor unit PC-board (A1P) with the power off

STEP2 Close the EL. COMPO. BOX lid and all front panels except as the side of the EL. COMPO. BOX and turn on the power to the outdoor unit and all connected AHUs. (Be sure to turn the power on at least 6 hours before operation in order to have power running to the crank case heater.)

STEP3 Check the LED display on the outdoor unit PC-board (A1P) is as shown in the table below and transmission is normal.

LED display (Default status of shipped)	SERV. MONI-TOR	MODE	TEST/ HWL	C/H SELECTOR			L.N.O.P	DE-MAND	MULTI
				IND	MASTER	SLAVE			
	HAP	H1P	H2P	H3P	H4P	H5P	H6P	H7P	H8P
Single system	◑	●	●	☼	●	●	●	●	●

LED display: ●...OFF, ☼...ON, ◑...Blinking

STEP4 Make the onsite settings as needed using the push button (BS1-BS5) on the outdoor unit PC-board (A1P) with the power on.

STEP5 Perform the check operation following the Check Operation Method of the [Service Precautions] label on the EL. COMPO. BOX lid. The system operation for about 40 minutes and automatically stops the check operation.
If the malfunction code is not displayed in the remote control after the system stop, check operation is completed. Normal operation will be possible after 5 minutes. If the malfunction code is displayed in the remote control, correct the malfunction following [Remote control displays malfunction code] and perform the check operation again.

[Remote control displays malfunction code]

Malfunction code	Installation error	Remedial action
E3, E4 F3, F6 UF	The shutoff valve of the outdoor unit is left closed.	Open the shutoff valve.
U1	The phases of the power to the outdoor unit is reversed.	Exchange two of the three phases (L1, L2, L3) to make a proper connection.
U1 U4 LC	No power is supplied to an outdoor or AHU (including phase interruption).	Make sure the power source wire is properly connected to the outdoor unit and revise if necessary.
UF	There is conflict on the connection of transmission wiring in the system.	Check if the refrigerant piping line and the transmission wiring are consistent with each other.
E3 F6 UF	Refrigerant overcharge.	Recalculate the additional amount refrigerant from the piping length and correct the refrigerant charge level by recovering any excessive refrigerant with a refrigerant recovery machine.
E4 F3	Insufficient refrigerant.	• Check if the additional refrigerant charge has been finished correctly. • Recalculate the additional amount refrigerant from the piping length and add the adequate amount.
U7, U4 UF, UH	If the outdoor unit terminal is connected when there is one outdoor unit installed.	Remove the line from the outdoor multi terminals (Q1 and Q2).

If any malfunction codes other than the above are displayed, check the service manual for how to respond.

1.2.5 Onsite Settings

1.2.5.1 Onsite Settings with the Power Off

If the COOL/HEAT selector was connected to the outdoor unit, set the dip switch (DS1) on the outdoor unit PC-board (A1P) to “ON” (it is set to “OFF” when shipped from the factory).
For the position of the dip switch (DS1), see the “Service Precautions” label (see at right) which is attached to the EL. COMPO. BOX lid.

Warning **Electric Shock Warning**

Never perform with the power on.
There is a serious risk of electric shock if any live part is touched.

1.2.5.2 Onsite Settings with the Power On

Use the push button switches (BS1 through BS5) on the outdoor unit PC-board (A1P) to make the necessary onsite settings.
See the “Service Precautions” label on the EL. COMPO. BOX lid for details on the positions and operating method of the push button switches and on the onsite setting.
Make sure to record the setting on the accessory “REQUEST FOR THE INDICATION” label.

Warning **Electric Shock Warning**

Use an insulated rod to operate the push buttons via the inspection door of EL. COMPO. BOX lid.
There is a risk of electric shock if you touch any live parts, since this operation must be performed with the power on.

1.2.6 Test Run

1.2.6.1 Before Test Run

- Make sure the following works are completed in accordance with the installation manual.
  - ■Piping work
  - ■Wiring work
  - ■Air tight test
  - ■Vacuum drying
  - ■Additional refrigerant charge
- Check that all work for the AHU is finished and there is no danger to operate.

1.2.6.2 Test Run

After check operation is completed, operate the unit normally and check the following.

(1) Make sure the AHU and outdoor units are operating normally.

(2) Operate the AHU and make sure the corresponding outdoor unit is also operating.

(3) Check to see if cold (or hot) air is coming out from the AHU.

NOTE:

- Heating is not possible if the outdoor temperature is 24°C or higher. Refer to the Operation manual.
- If a knocking sound can be heard in the liquid compression of the compressor, stop the unit immediately and then energize the crank case heater for a sufficient length of time before restarting the operation.
- Once stopping, the compressor will not restart in about 5 minutes even if the On/Off button of the remote control is pushed.
- When the system operation is stopped by the remote control, the outdoor units may continue operating for further 5 minutes at maximum.
- The outdoor unit fan may rotate at low speeds if the Night-time low noise setting or the External low noise level setting is made, but this is not a malfunction.

1.2.6.3 Checks after Test Run

Perform the following checks after the test run is complete.

- Record the contents of field setting.
  → Record them on the accessory “REQUEST FOR THE INDICATION” label.
  And attach the label on the back side of the front panel.
- Record the installation date.
  → Record the installation date on the accessory “REQUEST FOR THE INDICATION” label in accordance with the IEC60335-2-40.
  And attach the label on the back side of the front panel.

NOTE:
After the test run, when handing the unit over to the customer, make sure the EL.COMPO.BOX lid, the inspection door, and the unit casing are all attached.

1.3 Operation When Power is Turned On

1.3.1 When Turning On Power First Time

The unit cannot be run for up to 12 minutes to automatically set the master power and address.

Status

Outdoor unit	Test lamp H2P .... Blinks Can also be set during operation described above.
AHU	If ON button is pushed during operation described above, the "UH" malfunction indicator blinks. (Returns to normal when automatic setting is complete.)

1.3.2 When Turning On Power The Second Time and Subsequent

Tap the RESET button on the outdoor unit PC board. Operation becomes possible for about 2 minutes. If you do not push the RESET button, the unit cannot be run for up to 10 minutes to automatically set master power.

Status

Outdoor unit	Test lamp H2P .... Blinks Can also be set during operation described above.
AHU	If ON button is pushed during operation described above, the operation lamp lights but the compressor does not operate. (Returns to normal when automatic setting is complete.)

1.3.3 When an AHU or Outdoor unit Has Been Added, or AHU or Outdoor Unit PC Board Has Been Changed

Be sure to push and hold the RESET button for 5 seconds. If not, the addition cannot be recognized. In this case, the unit cannot be run for up to 12 minutes to automatically set the address.

Status

Outdoor unit	Test lamp H2P .... ON Can also be set during operation described above.
AHU	If ON button is pushed during operation described above, the "UH" or "U4" malfunction indicator blinks. (Returns to normal when automatic setting is complete.)

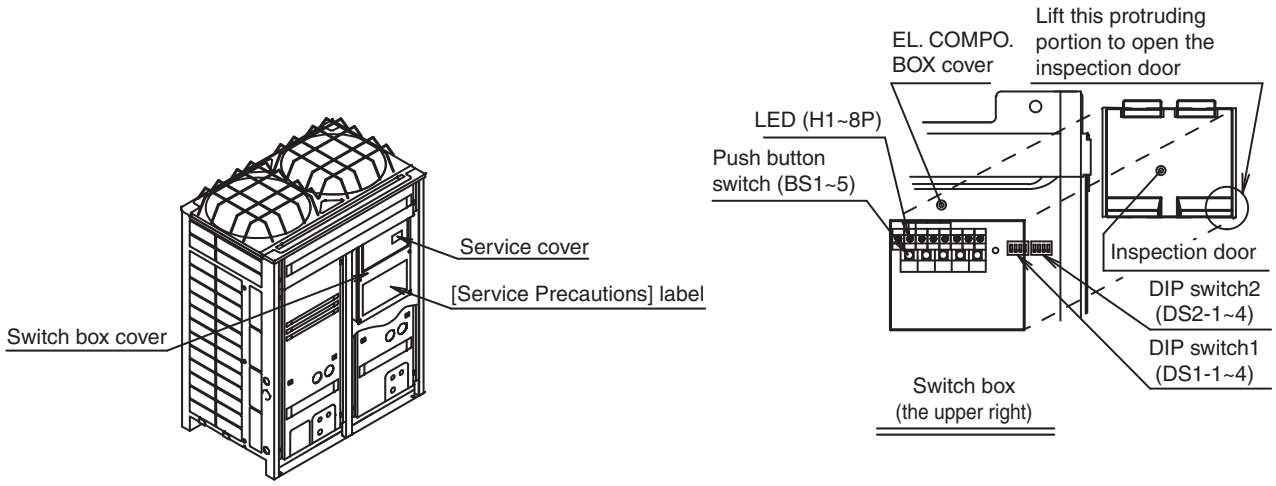

Caution **When the 400 volt power supply is applyed to "N" phase by mistake, replace Inverter P.C.B (A2P) and control transformer (T1R, T2R) in switch box together.**

(V0847)

2. Outdoor Unit PC Board Layout

Outdoor unit PC board

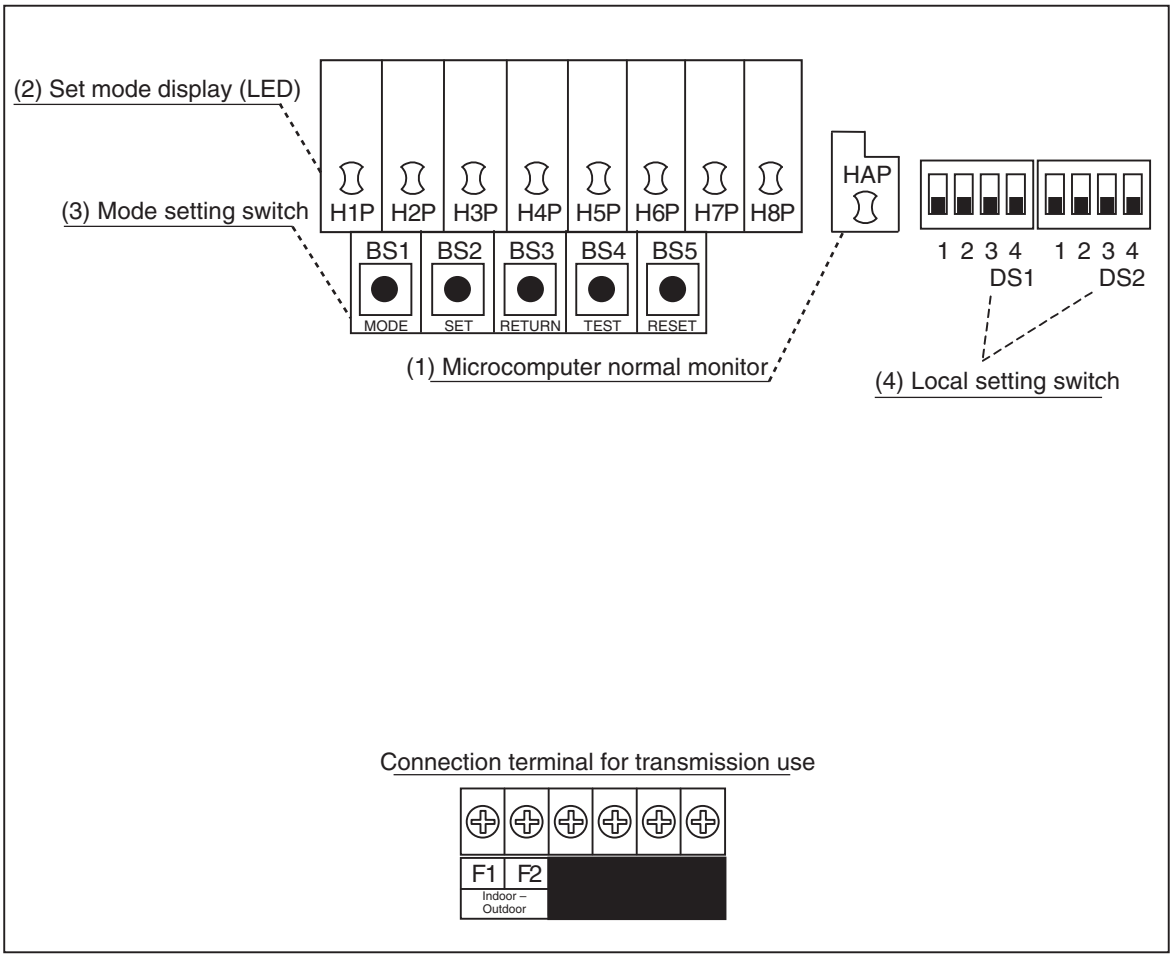

(V3054)

(1) Microcomputer normal monitor
This monitor blinks while in normal operation, and turns on or off when a malfunction occurs.

(2) Set mode display (LED)
LEDs display mode according to the setting.

(3) Mode setting switch
Used to change mode.

(4) Local setting switch
Used to make field settings.

3. Field Setting

3.1 Field Setting from Remote Control

Individual function of AHU can be changed from the remote control. At the time of installation or after service inspection / repair, make the local setting in accordance with the following description.
Wrong setting may cause malfunction.

3.1.1 Wired Remote Control

BRC1D528

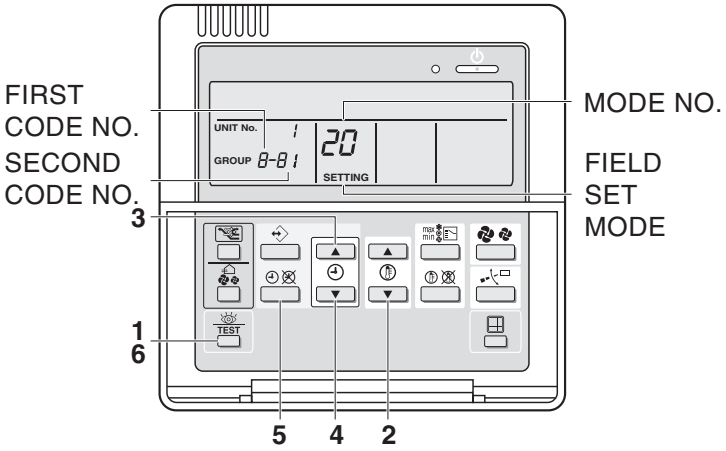

1. When in the normal mode, press the " TEST " button for a minimum of four seconds, and the FIELD SET MODE is entered.
2. Select the desired MODE NO. with the " " button.
3. Push the " " upper button and select FIRST CODE NO.
4. Push the " " lower button and select the SECOND CODE NO.
5. Push the " " button once and the present settings are SET.
6. Push the " TEST " button to return to the NORMAL MODE.

Notes :

1. Do not make any settings not given in the table.
2. Not displayed if the AHU is not equipped with that function.
3. When returning to the normal mode, "88" may be displayed in the LCD in order for the remote control to initialize itself.

3.1.2 Simplified Remote Control

BRC2A51
BRC2C51

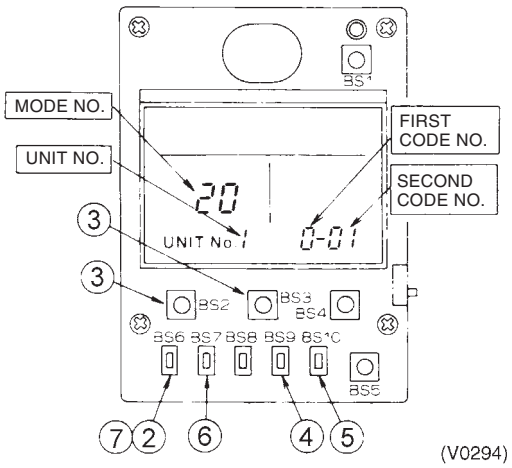

1. Remove the upper part of remote control.
2. When in the normal mode, press the [BS6] BUTTON (②) (field set), and the FIELD SET MODE is entered.
3. Select the desired MODE No. with the [BS2] BUTTON (③) (temperature setting ▲) and the [BS3] BUTTON (③) (temperature setting ▼).
4. Push the [BS9] BUTTON (④) (set A) and select FIRST CODE NO.
5. Push the [BS10] BUTTON (⑤) (set B) and select SECOND CODE NO.
6. Push the [BS7] BUTTON (⑥) (set/cancel) once and the present settings are SET.
7. Push the [BS6] BUTTON (⑦) (field set) to return to the NORMAL MODE.

3.1.3 Field Settings - Overview

Note : In the table below, the factory settings are indicated in bold.

Mode n°	Setting	Contents	Second Code n°				Remark
			00	01	02	03	
20 (10)	4	Renewal of target refrigerant control (x-control) (s)		**60**	120	180	1)
	8	System setting		**hp**	c/o	h/o	
22 (12)	3	Fan at thermo off (heating)		ON	ON	**OFF**	
	5	Auto-restart after power failure		T1T2 open at power restore	T1T2 stays identical to status prior to power failure		
23 (13)	0	Control setting EKEQF-box		**x-control**	y-control		
	1	Target refrigerant temperature setting T_e (y-control, cooling)		5	6	7	**1)**
	2	Target refrigerant temperature setting T_c (y-control, heating)		43	44	45	**1)**
	6	Hot start B (min)		0	1	**3**	1)
	7	Hot start A (°C)		34	37	40	**1)**
	8	Fan at defrost & oil return (heating)		**OFF**	ON	ON	
51	0	ΔT_c control (x-control)	30-55	35-55	40-55	43-55	**1)**
	1	ΔT_e control (x-control)	-7-20	-3-20	0-20	3-20	**1)**
	2	Thermo off (y-control, heating) B (min), C (min)	2-3	4-3	6-3	8-3	**1)**
	5	Thermo on (x-control) E (min)	**3**	5	10		
	6	Thermo off (x-control) B (min), C (min)	3-3	**5-3**	7-3	--	1)
	7	Thermo on (x-control, cooling) D (level)	1	--	2	--	**1)**
	8	Thermo off (x-control, cooling) A (level)	**1**	1 or 2			
	9	Thermo off (x-control, heating) A (level)	**5**				1)
	b	Thermo on (x-control, cooling) D (level)	1	**2**	3	4	1)

Remark 1) more settings possible, see “Field Settings”.

3.1.4 Field Settings - Details

(1) System Setting

The ERQ is a heat pump but can be limited to “cooling only” or “heating only” by a setting.

Mode n°	Setting switch n°	Setting position n°	Setting
20 (10)	8	**01**	Heat pump
		02	Cooling only
		03	Heating only

(2) Control Setting for EKEQF-Box

With the EKEQF-box, 2 types of control are possible:

- x-control: with DDC-controller
- y-control: no DDC-controller.

For more information about x-, y-control, refer to “Part 5 Control Box EKEQ - CBV3”.

Mode n°	Setting switch n°	Setting position n°	Setting
23 (13)	0	**01**	x-control
		02	y-control

(3) Indoor Fan Control

In cooling and fan only mode, the indoor fan is in ON-mode when the unit is working.
In heating, different situations are possible.

Mode n°	Setting switch n°	Setting position n°	Setting
22 (12)	3	01	Fan ON at thermo off
		02	Fan ON at thermo off
		03	Fan OFF at thermo off
23 (13)	8	**01**	Fan OFF at defrost and oil return
		02	Fan ON at defrost and oil return
		03	Fan ON at defrost and oil return

Fan off during thermo off and fan on during defrost/oil return will result in fan on during thermo off.

(4) Hot Start

During hot start, fan on is carried out when T_c is A°C or after B minutes.

Mode n°	Setting switch n°	Setting position n°	Setting
23 (13)	7	01	A = 34°C
		02	A = 37°C
		03	A = 40°C
		04	A = 43°C
	6	01	B = 0 min
		02	B = 1 min
		03	B = 3 min
		04	B = 5 min

(5) Thermostat Control

(5.1) X-control

■ **Thermo off**

When the DDC controller maintains level A for more than B minutes, and the thermostat is on, thermo off is carried out for at least C minutes. After C minutes, thermostat on-conditions are checked.

Mode n° setting	Setting switch n°	Setting position n°	Setting
51	8	**00**	level A = 1 (cooling)
		01	level A = 1 or 2 (cooling)
	6	00	B = 3 min, C = 3 min
		01	B = 5 min, C = 3 min
		02	B = 7 min, C = 3 min
		03	--
		04	B = 3 min, C = 5 min
		05	B = 5 min, C = 5 min
		06	B = 7 min, C = 5 min
		07	--
		08	B = 3 min, C = 10 min
		09	B = 5 min, C = 10 min
		10	B = 7 min, C = 10 min
	9	**00**	level A = 5 (heating)
		04	level A = 4 or 5 (heating)

■ **Thermo on**

When the DDC controller reaches level D or higher (lower for heating) and the thermostat is off for at least C minutes (refer to thermo off conditions), thermostat on is carried out for at least E minutes.

Mode n° setting	Setting switch n°	Setting position n°	Setting
51	7	00	D = level 1 (cooling)
		02	D = level 2 (cooling)
		04	D = level 3 (cooling)
		06	D = level 4 (cooling)
		08	D = level 5 (cooling)
	5	**00**	E = 3 min
		01	E = 5 min
		02	E = 10 min
	b	00	D = level 1 (heating)
		01	D = level 2 (heating)
		02	D = level 3 (heating)
		03	D = level 4 (heating)
		04	D = level 5 (heating)

(5.2) Y-control

Cooling: $T_{e\ set} - T_{e\ real} = A$
If A > B for C minutes, thermo off is applied for C minutes.
Heating: $T_{c\ real} - T_{c\ set} = A$
If A > B for C minutes, thermo off is applied for C minutes.

After C minutes, the units starts to operate.

Mode n° setting	Setting switch n°	Setting position n°	Setting	
			B (°C)	C (min)
51	2	00	2	3
		01	4	3
		02	6	3
		03	8	3
		04	2	5
		05	4	5
		06	6	5
		07	8	5
		08	2	7
		09	4	7
		10	6	7
		11	8	7
		12	2	10
		13	4	10
		14	6	10
		15	8	10

(5.3) Z-control

Standard Daikin thermostat on/off control.

(6) Target Refrigerant Temperature Setting

(6.1) X-control

■ **Cooling: Upper & lower limit of T_e can be chosen**

Mode n° setting	Setting switch n°	Setting position n°	Setting	
			Lower limit T_e (°C)	Upper limit T_e (°C)
51	1	00	-7	20
		01	-3	20
		02	0	20
		03	3	20
		04	-7	15
		05	-3	15
		06	0	15
		07	3	15
		08	-7	10
		09	-3	10
		10	0	10
		11	3	10
		12	-7	8
		13	-3	8
		14	0	8
		15	3	8

■ **Heating: Upper & lower limit of T_c can be chosen**

Mode n° setting	Setting switch n°	Setting position n°	Setting	
			Lower limit T_c (°C)	Upper limit T_c (°C)
51	0	00	30	55
		01	35	55
		02	40	55
		03	43	55
		04	30	50
		05	35	50
		06	40	50
		07	43	50
		08	30	49
		09	35	49
		10	40	49
		11	43	49
		12	30	45
		13	35	45
		14	40	45
		15	43	45

(6.2) Y-control

Since there is no external input to change the T_e/T_c value, their values can only be changed by local setup by means of the Daikin remote control (during installation).
Cooling: T_e setting
Heating: T_c setting

Mode n° setting	Setting switch n°	Setting position n°	Setting
23 (13)	1	01	T_e = 5°C
		02	T_e = 6°C
		03	T_e = 7°C
		04	T_e = 8°C
		05	T_e = 9°C
		06	T_e = 10°C
		07	T_e = 11°C
		08	T_e = 12°C
	2	01	T_c = 43°C
		02	T_c = 44°C
		03	T_c = 45°C
		04	T_c = 46°C
		05	T_c = 47°C
		06	T_c = 48°C
		07	T_c = 49°C

(7) Renewal of Target Refrigerant Temperature (X-control)

When a level of the main pcb is updated, the T_e/T_c value of the outdoor is updated simultaneously, otherwise the T_e/T_c value remains constant.
When the DDC level remains constant for A seconds, a level update is executed in the main pcb.

Mode n° setting	Setting switch n°	Setting position n°	Setting
20 (10)	4	**01**	A = 60 sec
		02	A = 120 sec
		03	A = 180 sec
		04	A = 240 sec

3.1.5 Setting of Operation Control Mode from Remote Control (Local Setting)

The operation control mode is compatible with a variety of controls and operations by limiting the functions of the operation remote control. Furthermore, operations such as remote control ON/OFF can be limited in accordance with the combination conditions.

3.2 Field Setting from Outdoor Unit

3.2.1 Field Setting from Outdoor Unit

■ **List of Field Setting Items**

This following section indicates the list of field setting items. For the lists of dip switch contents, Setting mode 1, and Setting mode 2, refer to information in tables shown on the following page onward.

For setting items of (*1), refer to detailed information provided on page 106 onward.

Setting item			Content and objective of setting	Overview of setting procedure
Function setting	1	Setting of COOL/ HEAT selection (*1)	■ COOL/HEAT selection methods are possible to select from the following (1) Control by each outdoor unit using the Daikin remote control (2) Control by each outdoor unit using the COOL/HEAT selection remote control	■ In order to use the COOL/HEAT selection remote control, set the DS1-1 on the outdoor unit PC board to OUT.
	2	Setting of low noise operation (*1)	A. Use external input to step down the upper limit of the fan (factory set to Step 8), providing low noise level. (1) Mode 1: Step 6 or lower (2) Mode 2: Step 5 or lower (3) Mode 3: Step 4 or lower	■ Use the "External control adapter for outdoor unit". KRP 58 Set to "External control adapter for outdoor unit" with No. 12 of "Setting mode 2" and select the mode with No. 25. If necessary, set the "Capacity priority setting" to ON with No. 29.
			B. The low noise operation aforementioned is enabled in nighttime automatic low noise operation mode. Start time: Possible to select in the range of 20:00 to 24:00 hours. End time: Possible to select in the range of 06:00 to 08:00 hours. (Use the said time as a guide since the start time and the end time are estimated according to outdoor temperatures.)	■ Make this setting while in "Setting mode 2". Select a mode with No. 22 of "Setting mode 2". Select the start time with No. 26 and the end time with No. 27. If necessary, set the "Capacity priority setting" to ON with No. 29.
	3	Setting of demand operation (*1)	■ Used to place limits on the compressor operating frequency to control the upper limit of power consumption. (1) Mode 1 of Demand 1: 60% or less of rating (2) Mode 2 of Demand 1: 70% or less of rating (3) Mode 3 of Demand 1: 80% or less of rating (4) Demand 2: 40% or less of rating	■ For setting with the use of "external control adapter": Set the system to "External control adapter for outdoor unit" with No. 12 of Setting mode 2" and select the mode with No. 30.
				■ For setting only in "Setting mode 2": Set the system to Normal demand mode with No. 32 of "Setting mode 2" and select the mode with No. 30.
	6	Setting of high static pressure	■ Make this setting to operate a system with diffuser duct while in high static pressure mode. (Use this setting mode when shields are installed on upper floors or balconies.) * In order to mount the diffuser duct, remove the cover from the outdoor unit fan.	■ Set No. 18 of "Setting mode 2" to ON.

Setting item			Content and objective of setting	Overview of setting procedure
Service setting	1	AHU fan forced operation	■ Used to operate the AHU in the stopped state in forced operation mode.	■ Set No. 5 of "Setting mode 2" to AHU forced fan.
	2	AHU forced operation	■ Used to operate the AHU in forced operation mode.	■ Set No. 6 of "Setting mode 2" to AHU forced operation mode.
	3	Change of targeted evaporating temperature (in cooling) Z-control	■ In cooling operation, used to change the targeted evaporating temperature for compressor capacity control.	■ Select high side or low side with No. 8 of "Setting mode 2".
	4	Change of targeted condensing temperature (in heating) Z-control	■ In heating operation, used to change the targeted condensing temperature for compressor capacity control.	■ Select high side or low side with No. 9 of "Setting mode 2".
	5	Setting of defrost selection	■ Used to change a temperature at which the defrost operation is initiated, thus making the initiation easy or hard.	■ Select fast side or slow side with No. 10 of "Setting mode 2".
	6	Setting of sequential startup	■ Used to start units not in sequence but simultaneously.	■ Set No. 11 of "Setting mode 2" to NONE.
	7	Emergency operation (*1)	■ If the compressor has a failure, used to prohibit the operation of compressor(s) concerned or outdoor unit(s) concerned and to conduct emergency operation of the system only with operable compressor(s) or outdoor unit(s).	■ Make this setting while in "Setting mode 2". For system with a single outdoor unit: Set with No. 19 or 42.
	8	Additional refrigerant charging (*1)	■ If a necessary amount of refrigerant cannot be charged due to the stop of outdoor unit, operate the outdoor unit and then refill refrigerant.	■ Set No. 20 of "Setting mode 2" to ON and then charge refrigerant.
	9	Refrigerant recovery mode (*1)	■ Used to recover refrigerant on site. With operations of AHU and outdoor units prohibited, fully open the expansion valve of the AHU and outdoor units.	■ Set No. 21 of "Setting mode 2" to ON.
	10	Vacuuming mode (*1)	■ Used to conduct vacuuming on site. Fully open the expansion valves of the AHU and outdoor units, and energize part of solenoid valves. Use a vacuum pump to conduct vacuuming.	■ Set No. 21 of "Setting mode 2" to ON.
	12	Power transistor check mode	■ Used for the troubleshooting of DC compressors. Inverter waveform output makes it possible to judge whether a malfunction results from the compressor or the PC board.	■ Set No. 28 of "Setting mode 2" to ON.
	13	Setting of model with spare PC board	■ In order to replace the PC board by a spare one, be sure to make model setting.	■ For this setting, set the DS2-2, -3, and-4 switches on the PC board to the model concerned.

For setting items of (*1), refer to detailed information provided on previous page.

■ Setting by dip switches

Using dip switches on the PC board enables field setting shown below. However, make no changes of factory settings except for DS1-1.

Dipswitch		Setting item	Description
No.	Setting		
DS1-1	ON	Cool / Heat select	Used to set cool / heat select by Cool/Heat selector equipped with outdoor unit.
	OFF (Factory set)		
DS1-2 ~DS1-4	ON	Not used	Do not change the factory settings.
	OFF (Factory set)		
DS2-1 ~4	ON	Not used	Do not change the factory settings.
	OFF (Factory set)		

Setting at replacement by spare PC board

Caution

DIP switch Setting after changing the main P.C.Board(A1P) to spare parts P.C.B.

After the replacement by the spare PC board, be sure to make settings shown below.

When you change the main P.C.Board(A1P) to spare parts P.C.B., please carry out the following setting.

Initial conditions of dip switches

DIP Switch Detail

DS No.	Item	Contents	
DS1-1	Cool/Heat change over setting	ON	COOL/HEAT setting is made with the use of a Cool/Heat selector mounted to the outdoor unit.
		OFF (Factory setting of spare PC board)	COOL/HEAT setting is not made with the use of a Cool/Heat selector mounted to the outdoor unit.
DS1-2	Power supply specification	ON	200V class (220V)
		OFF (Factory setting of spare PC board)	400V class (380V)
DS1-3	Cooling only/Heat-pump setting	ON	Cooling only setting
		OFF (Factory setting of spare PC board)	Heat pump setting
DS1-4	Unit allocation setting	ON	Make the following settings according to allocation of unit. (All models are set to OFF at factory.)
DS2-1		OFF (Factory setting of spare PC board)	

	Domestic Japan	Overseas General	Europe
DS1-4	OFF	OFF	ON
DS2-1	OFF	ON	OFF

DS No.	Item	Contents
DS2-2	Model setting	Make the following settings according to models of outdoor units. (All models are set to OFF at factory.)
DS2-3		
DS2-4		

	ERQ 125	ERQ 200	ERQ 250
DS2-2	OFF	OFF	ON
DS2-3	OFF	ON	ON
DS2-4	OFF	OFF	OFF

∗ If the DS1-1~1-4, DS2-2~2-4 setting has not been carried out, error code “UA” are displayed and unit can not be operated.

Refer “DS1-1~4, DS2-1~4 setting detail” on next page.

“Detail of DS1-1~4, DS2-1~4 setting” (for Overseas general)

Unit	Setting method (■ represents the position of switches)	
HEAT PUMP(5HP) ERQ 125	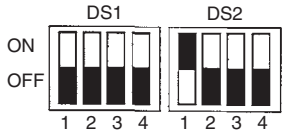	Set DS2-1 to ON.
HEAT PUMP(8HP) ERQ 200	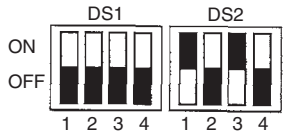	Set DS2-1 and DS2-3 to ON.
HEAT PUMP(10HP) ERQ 250	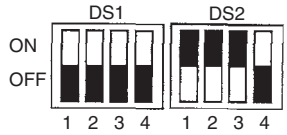	Set DS2-1, DS2-2 and DS2-3 to ON.

■ **Setting by pushbutton switches**

The following settings are made by pushbutton switches on PC board.

LED display

	MODE H1P	TEST H2P	COOL/HEAT select			Low noise H6P	Demand H7P	Multi H8P
			IND H3P	MASTER H4P	SLAVE H5P			
Single-outdoor-unit system	●	●	☼	●	●	●	●	●

(Factory setting)

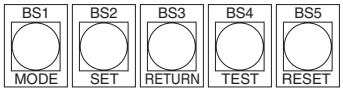

(V2760)

There are the following three setting modes.

① **Setting mode 1 (H1P off)**

Initial status (when normal): Used to select the cool/heat setting. Also indicates during “abnormal”, “low noise control” and “demand control”.

② **Setting mode 2 (H1P on)**

Used to modify the operating status and to set program addresses, etc. Usually used in servicing the system.

③ **Monitor mode (H1P blinks)**

Used to check the program made in Setting mode 2.

■ **Mode changing procedure 1**

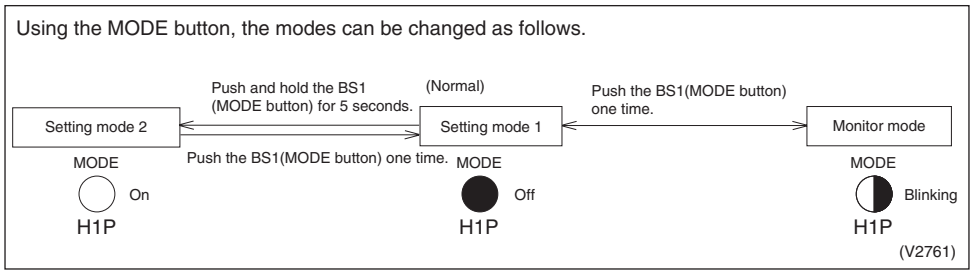

■ **Mode changing procedure 2**

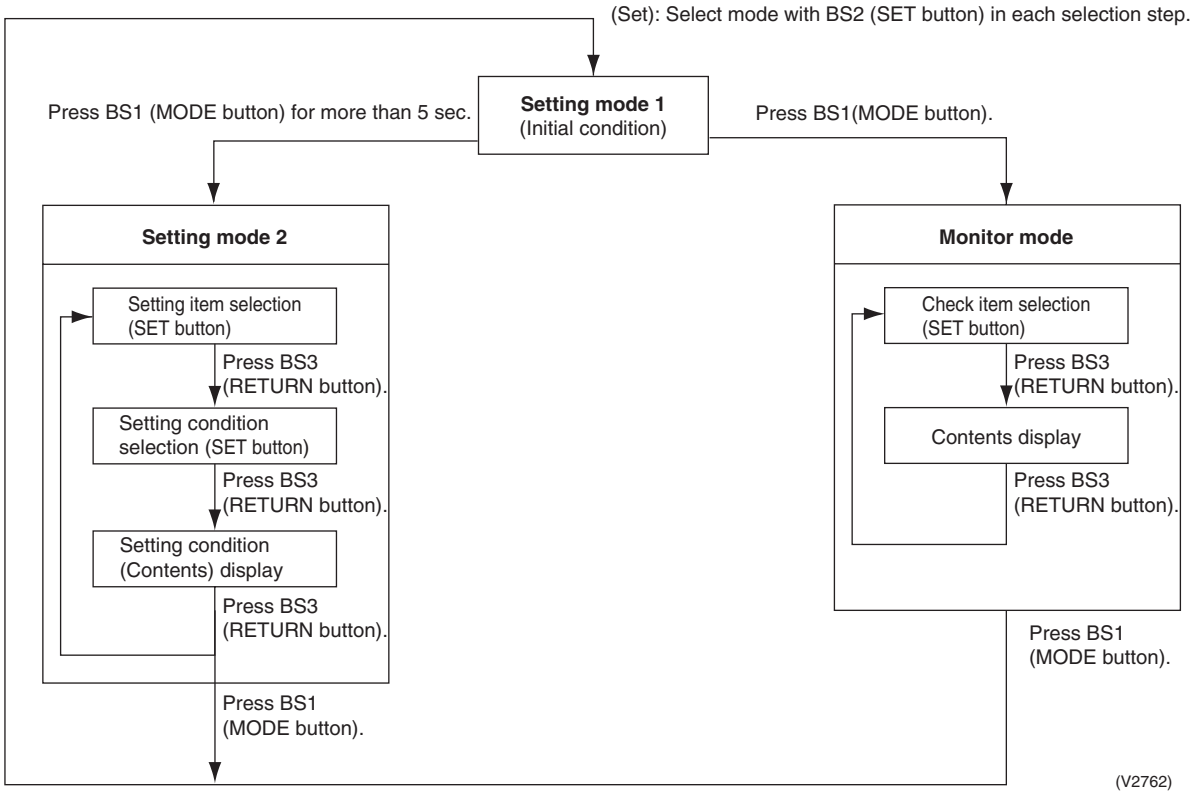

a. “Setting mode 1”

This mode is used to set and check the following items.

1. Set items ····· In order to make COOL/HEAT selection in a batch of outdoor unit group, change the setting.
   - COOL/HEAT selection (IND) ····· Used to select COOL or HEAT by individual outdoor unit (factory set).
2. Check items ····· The following items can be checked.
   (1) Current operating conditions (Normal / Abnormal / In check operation)
   (2) Setting conditions of COOL/HEAT selection (Individual / Batch master / Batch slave)
   (3) Low noise operating conditions (In normal operation / In low noise operation)
   (4) Demand operating conditions (In normal operation / In demand operation)

Procedure for changing COOL/HEAT selection setting

Normally, “Setting mode 1” is set. In case of other status, push MODE (BS1) button one time and set to “Setting mode 1”.

Push the SET (BS2) button to set the blinking of LED to any of conditions shown on the right.

☼ ON
● OFF
☼ Blink

Setting (displaying) item	MODE H1P	TEST H2P	COOL/HEAT select			Low noise H6P	Demand H7P
			IND H3P	MASTER H4P	SLAVE H5P		
For selection by individual outdoor unit (factory set)	●	●	☼	●	●	●	●

Push the RETURN (BS3) button to determine the setting.

Pushing the RETURN (BS3) button will return the system to the initial condition of "Setting mode 1".

Procedure for checking check items

The system is normally set to "Setting mode 1".
Should the system be set to any mode other than that, push the MODE (BS1) button to set the system to "Setting mode 1".

Check the system for each condition through LED displays. (Refer to information in table on the right.)

MODE H1P	TEST H2P	COOL/HEAT select			Low noise H6P	Demand H7P
		IND H3P	MASTER H4P	SLAVE H5P		
●	●	☼	●	●	●	●

Current operating conditions
●Normal ☼Abnormal
☼In preparation or in check operation

Setting of COO/HEAT selection
☼●●By individual outdoor unit
●☼●In a batch of outdoor unit group with master unit
●●☼In a batch of outdoor unit group with slave unit

Low noise operating conditions
●In normal operation
☼In low noise operation

Demand operating conditions
●In normal operation
☼In demand operation

Pushing the RETURN (BS3) button will bring the system to the initial state of "Setting mode 1".

(V2763)

b. “Setting mode 2”

Push and hold the MODE (BS1) button for 5 seconds and set to “Setting mode 2”.

<Selection of setting items>

Push the SET (BS2) button and set the LED display to a setting item shown in the table on the right.
↓
Push the RETURN (BS3) button and decide the item. (The present setting condition is blinked.)

<Selection of setting conditions>

Push the SET (BS2) button and set to the setting condition you want.
↓
Push the RETURN (BS3) button and decide the condition.

Push the RETURN (BS3) button and set to the initial status of “Setting mode 2”.

∗ If you become unsure of how to proceed, push the MODE (BS1) button and return to setting mode 1.

(V2764)

No.	Setting item	Description
0	Digital pressure gauge kit display	Used to make setting of contents to display on the digital pressure gauges (e.g. pressure sensors and temperature sensors)
1	Cool/heat unified address	Sets address for cool/heat unified operation.
2	Low noise/demand address	Address for low noise/demand operation
3	Test operation settings	Used to conduct test operation without making changes to the PCB and replacing the refrigerant, after the completion of maintenance.
5	AHU forced fan	Allows forced operation of AHU fan while unit is stopped.
6	AHU forced operation	Allows forced operation of AHU.
10	Defrost changeover setting	Changes the temperature condition for defrost and sets to quick defrost or slow defrost.
12	External low noise setting / Demand setting	Reception of external low noise or demand signal
18	High static pressure setting	Make this setting in the case of operating in high static pressure mode with diffuser duct mounted. (In order to mount the diffuser duct, remove the cover from the outdoor unit fan.)
19	Emergency operation (STD compressor operation prohibited) ! only for ERQ 250	Used to operate system only with inverter compressor when STD compressor malfunctions. This is a temporary operation extremely impairing comfortable environment. Therefore, prompt replacement of the compressor is required. (This operation, however, is not set with ERQ 125, 200.)
20	Additional refrigerant charge operation setting	Carries out additional refrigerant charge operation.
21	Refrigerant recovery/ vacuuming mode setting	Sets to refrigerant recovery or vacuuming mode.
22	Night-time low noise setting	Sets automatic nighttime low noise operation in a simple way. The operating time is based on “Starting set” and “Ending set”.
25	Setting of external low noise level	Sets low noise level when the low noise signal is input from outside.
26	Night-time low noise operation start setting	Sets starting time of nighttime low noise operation. (Night-time low noise setting is also required.)
27	Night-time low noise operation end setting	Sets ending time of nighttime low noise operation. (Night-time low noise setting is also required.)
28	Power transistor check mode ∗Check after disconnection of compressor wires	Used for trouble diagnosis of DC compressor. Since the waveform of inverter is output without wiring to the compressor, it is convenient to probe whether the trouble comes from the compressor or PC board.
29	Capacity precedence setting	If the capacity control is required, the low noise control is automatically released by this setting during carrying out low noise operation and nighttime low noise operation.
30	Demand setting 1	Changes target value of power consumption when demand control 1 is input.
32	Normal demand setting	Normally enables demand control 1 without external input. (Effective to prevent a problem that circuit breaker of small capacity is shut down due to large load.)

No.	Setting item	Description
35	Setting of difference in elevation for the outdoor unit	Make the setting when the outdoor unit is installed 40 m or more below the AHU.
38	Emergency operation	Used to temporarily prohibit the applicable outdoor unit from operating should there be any faulty part. Since the comfortable environment is extremely impaired, prompt replacement of the part is required.
42	Emergency operation (prohibition of INV compressor operation)	If the INV compressor has a failure, used to run the system only with STD compressor. This is a temporary running of the system until the compressor is replaced, thus making comfort extremely worse. Therefore, it is recommended to replace the compressor as soon as possible. (Be noted this setting is not available on model ERQ 125.)

No.	Setting item display								Setting condition display
	Setting item	MODE H1P	TEST H2P	C/H selection			Low noise H6P	Demand H7P	✻ Factory set
				IND H3P	Master H4P	Slave H5P			
0	Digital pressure gauge kit display	☼	●	●	●	●	●	●	Address / Binary number (4 digits): 0 ☼●●●●●● 1 ☼●●●●●☼ ~ 15 ☼●●☼☼☼☼
1	Cool / Heat Unified address	☼	●	●	●	●	●	☼	Address / Binary number (6 digits): 0 ☼●●●●●● ✻ 1 ☼●●●●●☼ ~ 31 ☼●☼☼☼☼☼
2	Low noise/demand address	☼	●	●	●	●	☼	●	Address / Binary number (6 digits): 0 ☼●●●●●● ✻ 1 ☼●●●●●☼ ~ 31 ☼●☼☼☼☼☼
3	Test operation (Refer to the description on page 180)	☼	●	●	●	●	☼	☼	Test operation: ON ☼●●●●●☼ Test operation: OFF ☼●●●●☼● ✻
5	AHU forced fan	☼	●	●	●	☼	●	☼	Normal operation ☼●●●●●☼ ✻ Indoor forced fan H ☼●●●●☼●
6	AHU forced operation	☼	●	●	●	☼	☼	●	Normal operation ☼●●●●●☼ ✻ Indoor forced operation ☼●●●●☼●
10	Defrost changeover setting	☼	●	●	☼	●	☼	●	Quick defrost ☼●●●☼●● Normal (factory setting) ☼●●●●☼● ✻ Slow defrost ☼●●●●●☼
12	External low noise/ demand setting	☼	●	●	☼	☼	●	●	External low noise/demand: NO ☼●●●●●☼ ✻ External low noise/demand: YES ☼●●●●☼●
18	High static pressure setting	☼	●	☼	●	●	☼	●	High static pressure setting: OFF ☼●●●●●☼ ✻ High static pressure setting: ON ☼●●●●☼●
19	Emergency operation (STD compressor is inhibited to operate.)	☼	●	☼	●	●	☼	☼	OFF ☼●●●●●● ✻ STD 1, 2 operation: Inhibited ☼●●●●●☼ STD 2 operation: Inhibited ☼●●●●☼●
20	Additional refrigerant charging operation setting	☼	●	☼	●	☼	●	●	Refrigerant charging: OFF ☼●●●●●☼ ✻ Refrigerant charging: ON ☼●●●●☼●
21	Refrigerant recovery/vacuuming mode setting	☼	●	☼	●	☼	●	☼	Refrigerant recovery / vacuuming: OFF ☼●●●●●☼ ✻ Refrigerant recovery / vacuuming: ON ☼●●●●☼●
22	Night-time low noise setting	☼	●	☼	●	☼	☼	●	OFF ☼●●●●●● ✻ Level 1 (outdoor fan with 6 step or lower) ☼●●●●●☼ Level 2 (outdoor fan with 5 step or lower) ☼●●●●☼● Level 3 (outdoor fan with 4 step or lower) ☼●●●●☼☼

No.	Setting item display								Setting condition display
	Setting item	MODE H1P	TEST H2P	C/H selection			Low noise H6P	Demand H7P	✻ Factory set
				IND H3P	Master H4P	Slave H5P			
25	Low noise setting	☼	●	☼	☼	●	●	☼	Level 1 (outdoor fan with 6 step or lower) ☼●●●●●☼ Level 2 (outdoor fan with 5 step or lower) ☼●●●●☼● ✻ Level 3 (outdoor fan with 4 step or lower) ☼●●●☼●●
26	Night-time low noise operation start setting	☼	●	☼	☼	●	☼	●	About 20:00 ☼●●●●●☼ About 22:00 (factory setting) ☼●●●●☼●✻ About 24:00 ☼●●●☼●●
27	Night-time low noise operation end setting	☼	●	☼	☼	●	☼	☼	About 6:00 ☼●●●●●☼ About 7:00 ☼●●●●☼● About 8:00 (factory setting) ☼●●●☼●● ✻
28	Power transistor check mode	☼	●	☼	☼	☼	●	●	OFF ☼●●●●●☼ ✻ ON ☼●●●●☼●
29	Capacity precedence setting	☼	●	☼	☼	☼	●	☼	OFF ☼●●●●●☼ ✻ ON ☼●●●●☼●
30	Demand setting 1	☼	●	☼	☼	☼	☼	●	60 % demand ☼●●●●●☼ 70 % demand ☼●●●●☼● ✻ 80 % demand ☼●●●☼●●
32	Normal demand setting	☼	☼	●	●	●	●	●	OFF ☼●●●●●☼ ✻ ON ☼●●●●☼●
35	Setting of difference in elevation for the outdoor unit	☼	☼	●	●	●	☼	☼	Normal ☼●●●●●● 65 m or less ☼●●●☼☼● 90 m or less ☼●●●☼☼☼
38	Emergency operation	☼	☼	●	●	☼	☼	●	OFF ☼●●●●●☼ ✻ Master unit operation: Inhibited ☼●●●●☼●
42	Emergency operation (prohibition of INV compressor operation)	☼	☼	●	☼	●	☼	●	Normal operation ☼●●●●●☼ ✻ Emergency operation (prohibition of INV compressor operation) ☼●●●●☼●

c. Monitor mode

To enter the monitor mode, push the MODE (BS1) button when in “Setting mode 1”.

<Selection of setting item>

Push the SET (BS2) button and set the LED display to a setting item.

<Confirmation on setting contents>

Push the RETURN (BS3) button to display different data of set items.

Push the RETURN (BS3) button and switches to the initial status of “Monitor mode”.

∗ Push the MODE (BS1) button and returns to “Setting mode 1”.

(V2765)

No.	Setting item	LED display							Data display
		H1P	H2P	H3P	H4P	H5P	H6P	H7P	
0	Various settings	◑	●	●	●	●	●	●	Lower 4 digits
1	C/H unified address	◑	●	●	●	●	●	☼	Lower 6 digits
2	Low noise/demand address	◑	●	●	●	●	☼	●	
3	Not used	◑	●	●	●	●	☼	☼	
4	Airnet address	◑	●	●	●	☼	●	●	
5	Number of connected AHUs	◑	●	●	●	☼	●	☼	
6	Number of connected BS units	◑	●	●	●	☼	☼	●	
7	Number of connected zone units (excluding outdoor and BS unit)	◑	●	●	●	☼	☼	☼	
8	Number of outdoor units	◑	●	●	☼	●	●	●	
9	Number of connected BS units	◑	●	●	☼	●	●	☼	Lower 4 digits: upper
10	Number of connected BS units	◑	●	●	☼	●	☼	●	Lower 4 digits: lower
11	Number of zone units (excluding outdoor and BS unit)	◑	●	●	☼	●	☼	☼	Lower 6 digits
12	Number of terminal blocks	◑	●	●	☼	☼	●	●	Lower 4 digits: upper
13	Number of terminal blocks	◑	●	●	☼	☼	●	☼	Lower 4 digits: lower
14	Contents of malfunction (the latest)	◑	●	●	☼	☼	☼	●	Malfunction code table Refer page 181.
15	Contents of malfunction (1 cycle before)	◑	●	●	☼	☼	☼	☼	
16	Contents of malfunction (2 cycle before)	◑	●	☼	●	●	●	●	
20	Contents of retry (the latest)	◑	●	☼	●	☼	●	●	
21	Contents of retry (1 cycle before)	◑	●	☼	●	☼	●	☼	
22	Contents of retry (2 cycle before)	◑	●	☼	●	☼	☼	●	
25	Number of multi connection outdoor units	◑	●	☼	☼	●	●	☼	Lower 6 digits

The numbers in the "No." column represent the number of times to press the SET (BS2) button.

Setting item 0 Display contents of “Number of units for various settings”

EMG operation / backup operation setting	ON	◑	●	●	☼	●	●	●
	OFF	◑	●	●	●	●	●	●
Defrost select setting	Short	◑	●	●	●	☼	●	●
	Medium	◑	●	●	●	◑	●	●
	Long	◑	●	●	●	●	●	●
Te setting	H	◑	●	●	●	●	☼	●
	M	◑	●	●	●	●	◑	●
	L	◑	●	●	●	●	●	●
Tc setting	H	◑	●	●	●	●	●	☼
	M	◑	●	●	●	●	●	◑
	L	◑	●	●	●	●	●	●

Push the SET button and match with the LEDs No. 1 - 15, push the RETURN button, and confirm the data for each setting.

★ Data such as addresses and number of units is expressed as binary numbers; the two ways of expressing are as follows:

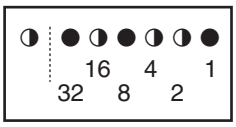

The No. 1 cool/heat unified address is expressed as a binary number consisting of the lower 6 digits. (0 - 63)

In ① the address is 010110 (binary number), which translates to 16 + 4 + 2 = 22 (base 10 number). In other words, the address is 22.

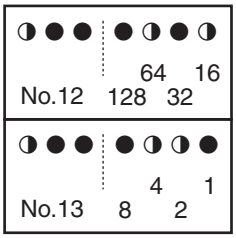

The number of terminal blocks for No. 12 and 13 is expressed as an 8-digit binary number, which is the combination of four upper, and four lower digits for No. 12 and 13 respectively. (0 - 128)
In ② the address for No. 12 is 0101, the address for No. 13 is 0110, and the combination of the two is 01010110 (binary number), which translates to 64 + 16 + 4 + 2 = 86 (base 10 number). In other words, the number of terminal block is 86.

★ See the preceding page for a list of data, etc. for No. 0 - 25.

3.2.2 Cool / Heat Mode Switching

There are the following 2 cool/heat switching modes.

① Set cool/heat separately for each outdoor unit system by AHU remote control (only for Z-control).

② Set cool/heat separately for each outdoor unit system by cool/heat selector (X, Y and Z-control).

① Set Cool / Heat for Outdoor Unit System by AHU Remote Control

- ◆ Set outdoor unit PC board DS1-1 to IN (factory set).
- ◆ Set cool/heat switching to IND (individual) for “Setting mode 1” (factory set).

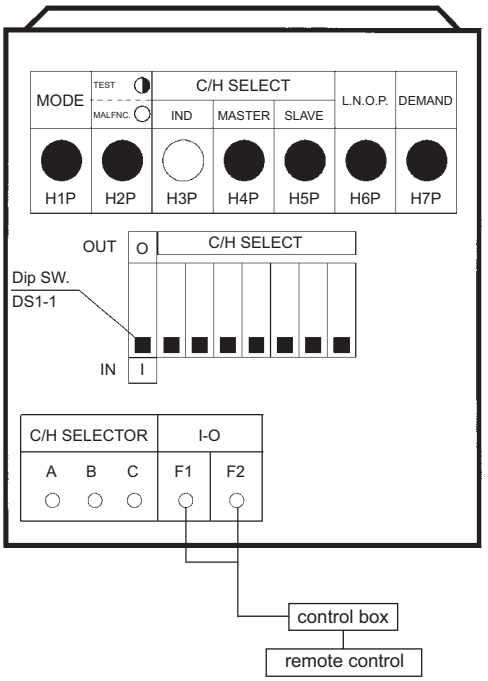

(V3058)

② **Set Cool / Heat for Outdoor Unit System by Cool / Heat Selector**

- ◆ Set outdoor unit PC board DS1-1 to OUT (factory set).
- ◆ Set cool/heat switching to IND (individual) for “Setting mode 1” (factory set).

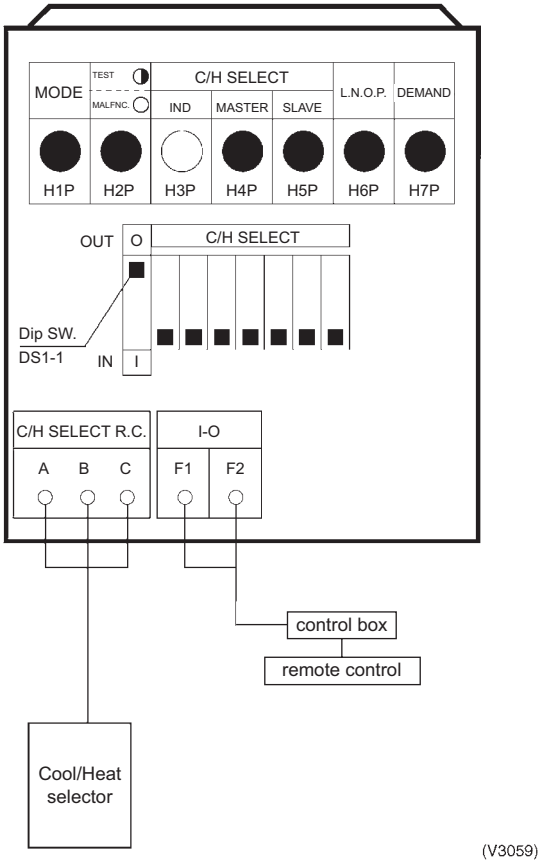

3.2.3 Setting of Low Noise Operation and Demand Operation

Setting of Low Noise Operation

By connecting the external contact input to the low noise input of the outdoor unit external control adapter (optional), you can lower operating noise.
Be aware that this setting may cause a slight capacity drop.

Setting	Content
Mode 1	Set the outdoor unit fan to Step 6 or lower.
Mode 2	Set the outdoor unit fan to Step 5 or lower.
Mode 3	Set the outdoor unit fan to Step 4 or lower.

A. When the low noise operation is carried out by external instructions (with the use of the external control adapter for outdoor unit)

1. While in "Setting mode 2", set the setting condition for set item No. 12 (Setting of external low noise/demand operation) to "YES".
2. If necessary, while in "Setting mode 2", select the setting condition (i.e., "Mode 1", "Mode 2", or "Mode 3") for set item No. 25 (Setting of external low noise level).
3. If necessary, while in "Setting mode 2", set the setting condition for the set item No. 29 (Setting of capacity precedence) to "ON".
   (If the condition is set to "ON", when the air-conditioning load reaches a high level, the low noise operation command will be ignored to put the system into normal operation mode.)

B. When the low noise operation is carried out automatically at night (The external control adapter for outdoor unit is not required)

1. While in "Setting mode 2", select the setting condition (i.e., "Mode 1", "Mode 2", or "Mode 3") for set item No. 22 (Setting of nighttime low noise level).
2. If necessary, while in "Setting mode 2", select the setting condition (i.e., "20:00", "22:00", or "24:00") for set item No. 26 (Setting of start time of nighttime low noise operation).
   (Use the start time as a guide since it is estimated according to outdoor temperatures.)
3. If necessary, while in "Setting mode 2", select the setting condition (i.e., "06:00", "07:00", or "08:00") for set item No. 27 (Setting of end time of nighttime low noise operation).
   (Use the end time as a guide since it is estimated according to outdoor temperatures.)
4. If necessary, while in "Setting mode 2", set the setting condition for set item No. 29 (Setting of capacity precedence) to "ON".
   (If the condition is set to "ON", when the air-conditioning load reaches a high level, the system will be put into normal operation mode even during nighttime.)

Image of operation in the case of A

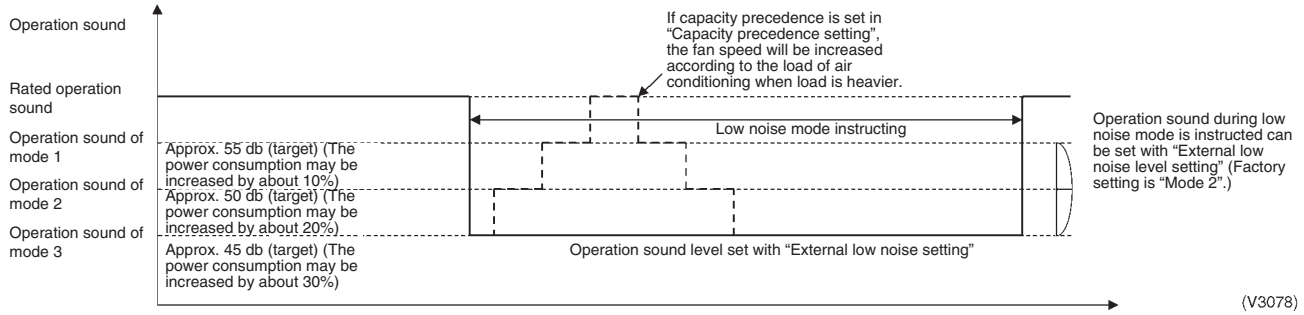

Image of operation in the case of B

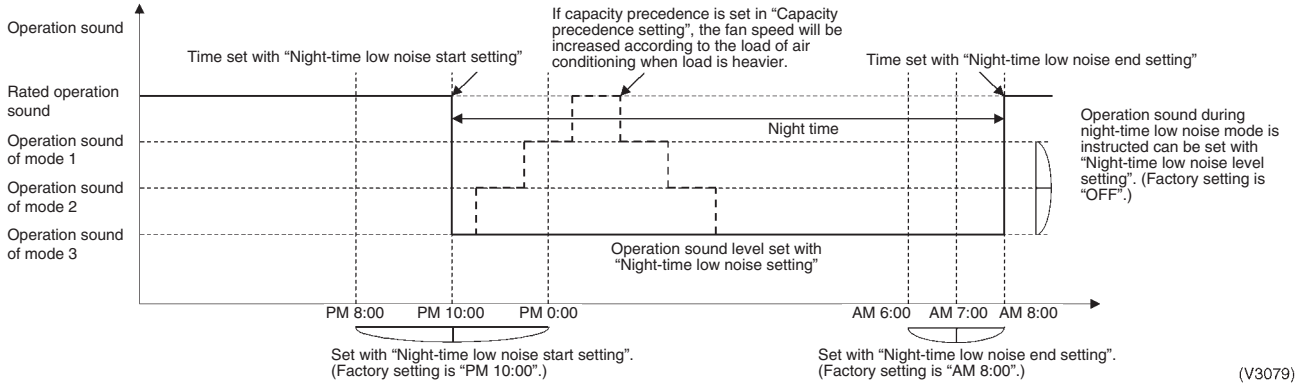

Image of operation in the case of A and B

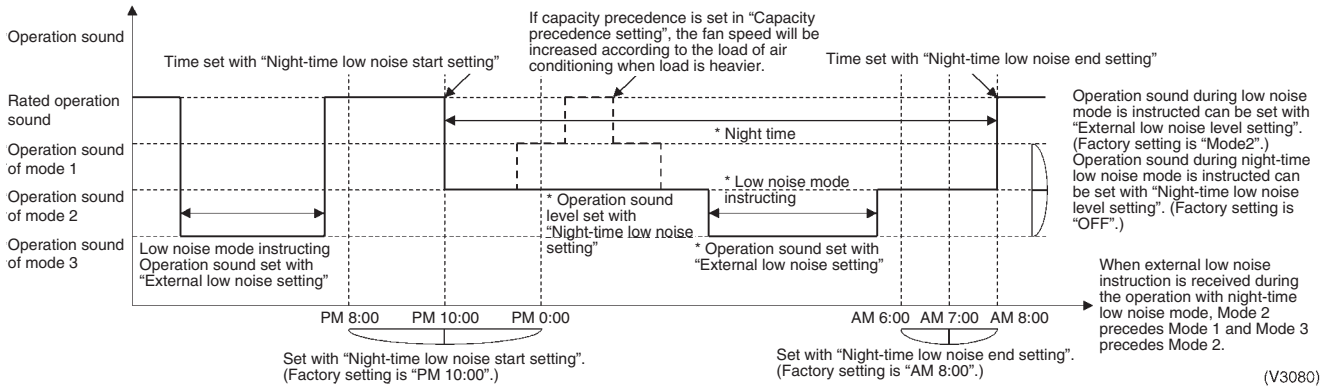

Setting of Demand Operation

By connecting the external contact input to the demand input of the outdoor unit external control adapter (optional), the power consumption of unit operation can be saved suppressing the compressor operating condition.

Set item	Condition	Content
Demand 1	Mode 1	The compressor operates at approx. 60% or less of rating.
	Mode 2	The compressor operates at approx. 70% or less of rating.
	Mode 3	The compressor operates at approx. 80% or less of rating.
Demand 2	—	The compressor operates at approx. 40% or less of rating.

A. When the demand operation is carried out by external instructions (with the use of the external control adapter for outdoor unit).

1. While in "Setting mode 2", set the setting condition for set item No. 12 (Setting of external low noise/demand operation) to "YES".
2. If necessary, while in "Setting mode 2", select the set item No. 30 (Setting of Demand 1 level) and then set the setting condition to targeted mode.

B. When the normal demand operation is carried out. (Use of the external control adapter for outdoor unit is not required.)

1. While in "Setting mode 2", make setting of the set item No. 32 (Setting of constant demand) to "ON".
2. While in "Setting mode 2", select the set item No. 30 (Setting of Demand 1 level) and then set the setting condition to targeted mode.

Image of operation in the case of A

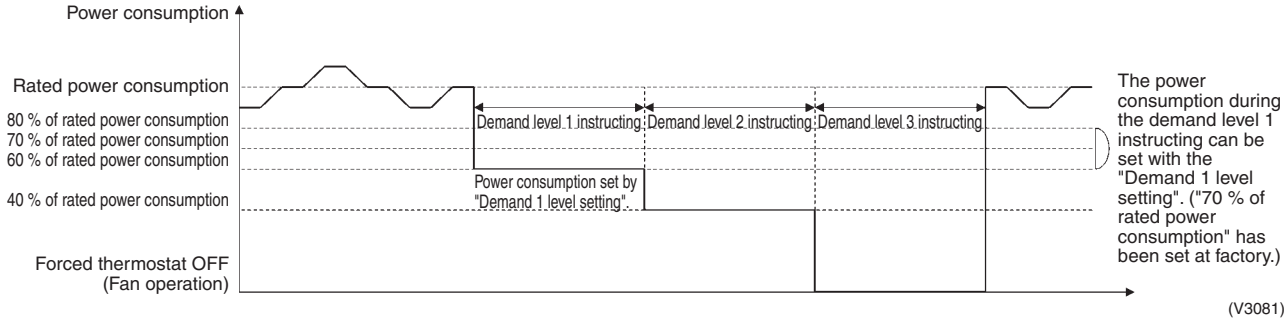

Image of operation in the case of B

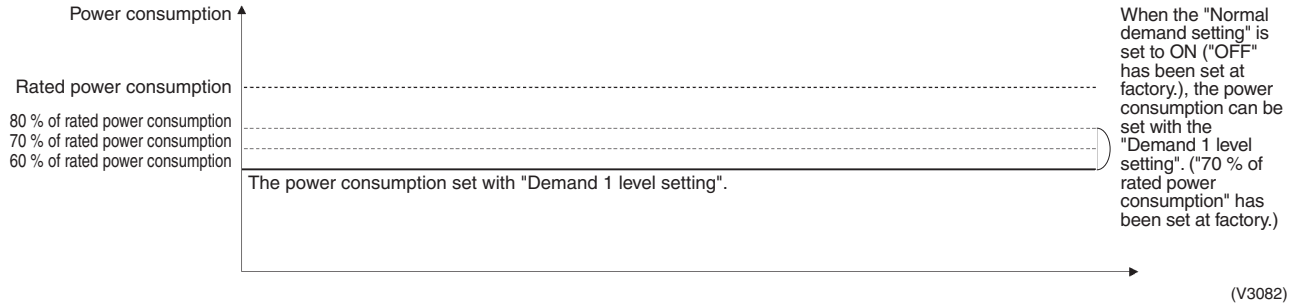

Image of operation in the case of A and B

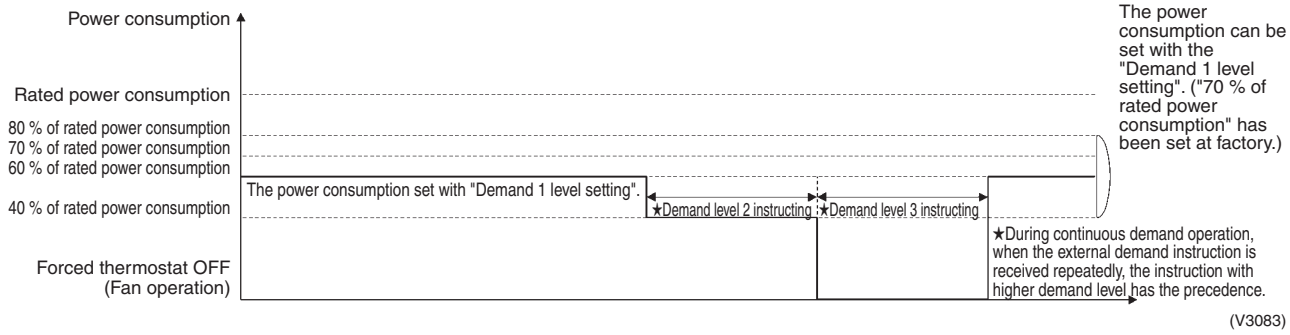

Detailed Setting Procedure of Low Noise Operation and Demand Control

1. Setting mode 1 (H1P off)

① In setting mode 2, push the BS1 (MODE button) one time. → Setting mode 2 is entered and H1P lights.
During the setting mode 1 is displayed, “In low noise operation” and “In demand control” are displayed.

2. Setting mode 2 (H1P on)

① In setting 1, push and hold the BS1 (MODE button) for more than 5 seconds. → Setting mode 2 is entered and H1P lights.
② Push the BS2 (SET button) several times and match the LED display with the Setting No. you want.
③ Push the BS3 (RETURN button) one time, and the present setting content is displayed.
→ Push the BS2 (SET button) several times and match the LED display with the setting content (as shown below) you want.
④ Push the BS3 (RETURN button) two times. → Returns to ①.
⑤ Push the BS1 (MODE button) one time. → Returns to the setting mode 1 and turns H1P off.

○: ON ●: OFF ☼: Blink

Setting No.	Setting contents	① Setting No. indication							② Setting No. indication							Setting contents	③ Setting contents indication (Initial setting)						
		H1P	H2P	H3P	H4P	H5P	H6P	H7P	H1P	H2P	H3P	H4P	H5P	H6P	H7P		H1P	H2P	H3P	H4P	H5P	H6P	H7P
12	External low noise / Demand setting	○	●	●	●	●	●	●	○	●	●	○	○	●	●	NO (Factory setting)	○	●	●	●	●	●	☼
																YES	○	●	●	●	●	☼	●
22	Night-time low noise setting								○	●	○	●	○	○	●	OFF (Factory setting)	○	●	●	●	●	●	●
																Mode 1	○	●	●	●	●	●	☼
																Mode 2	○	●	●	●	●	☼	●
																Mode 3	○	●	●	●	●	☼	☼
25	External low noise setting								○	●	○	○	●	●	○	Mode 1	○	●	●	●	●	●	☼
																Mode 2 (Factory setting)	○	●	●	●	●	☼	●
																Mode 3	○	●	●	●	☼	●	●
26	Night-time low noise start setting								○	●	○	○	●	○	●	PM 8:00	○	●	●	●	●	●	☼
																PM 10:00 (Factory setting)	○	●	●	●	●	☼	●
																PM 0:00	○	●	●	●	☼	●	●
27	Night-time low noise end setting								○	●	○	○	●	○	○	AM 6:00	○	●	●	●	●	●	☼
																AM 7:00	○	●	●	●	●	☼	●
																AM 8:00 (Factory setting)	○	●	●	●	☼	●	●
29	Capacity precedence setting								○	●	○	○	○	●	○	Low noise precedence (Factory setting)	○	●	●	●	●	●	☼
																Capacity precedence	○	●	●	●	●	☼	●
30	Demand setting 1								○	●	○	○	○	○	●	60 % of rated power consumption	○	●	●	●	●	●	☼
																70 % of rated power consumption (Factory setting)	○	●	●	●	●	☼	●
																80 % of rated power consumption	○	●	●	●	☼	●	●
32	Normal demand setting								○	●	●	●	●	●	●	OFF (Factory setting)	○	●	●	●	●	●	☼
																ON	○	●	●	●	●	☼	●

Setting mode indication section Setting No. indication section Set contents indication section

3.2.4 Setting of Refrigerant Recovery Mode

When carrying out the refrigerant collection on site, fully open the respective expansion valve. All unit operation is prohibited.

[Operation procedure]

① In **setting mode 2** with units in stop mode, set “Refrigerant Recovery / Vacuuming mode” to ON. The respective expansion valve of the units are fully opened. (H2P turns to display “TEST OPERATION” (blinks), “TEST OPERATION” is displayed on the remote control, and the all outdoor unit operation is prohibited.
After setting, do not cancel “Setting Mode 2” until completion of refrigerant recovery operation.

② Collect the refrigerant using a refrigerant recovery unit. (See the instruction attached to the refrigerant recovery unit for more detal.)

③ Press Mode button “BS1” once and reset “Setting Mode 2”.

3.2.5 Setting of Vacuuming Mode

In order to perform vacuuming operation at site, fully open the expansion valves of the units and turn on some solenoid valves.

[Operating procedure]

① With **Setting Mode 2** while the unit stops, set “Refrigerant recovery / Vacuuming mode” to ON. The expansion valves of the units fully open and some of solenoid valves open.
(H2P blinks to indicate the test operation, and the remote control displays "Test Operation", thus prohibiting operation.)
After setting, do not cancel “Setting Mode 2” until completion of Vacuuming operation.

② Use the vacuum pump to perform vacuuming operation.

③ Press Mode button “BS1” once and reset “Setting Mode 2”.

3.2.6 Check Operation Detail

CHECK OPERATION FUNCTION

(Press the MODE button BS1 once and set to SETTING MODE 1 (H1P: OFF))

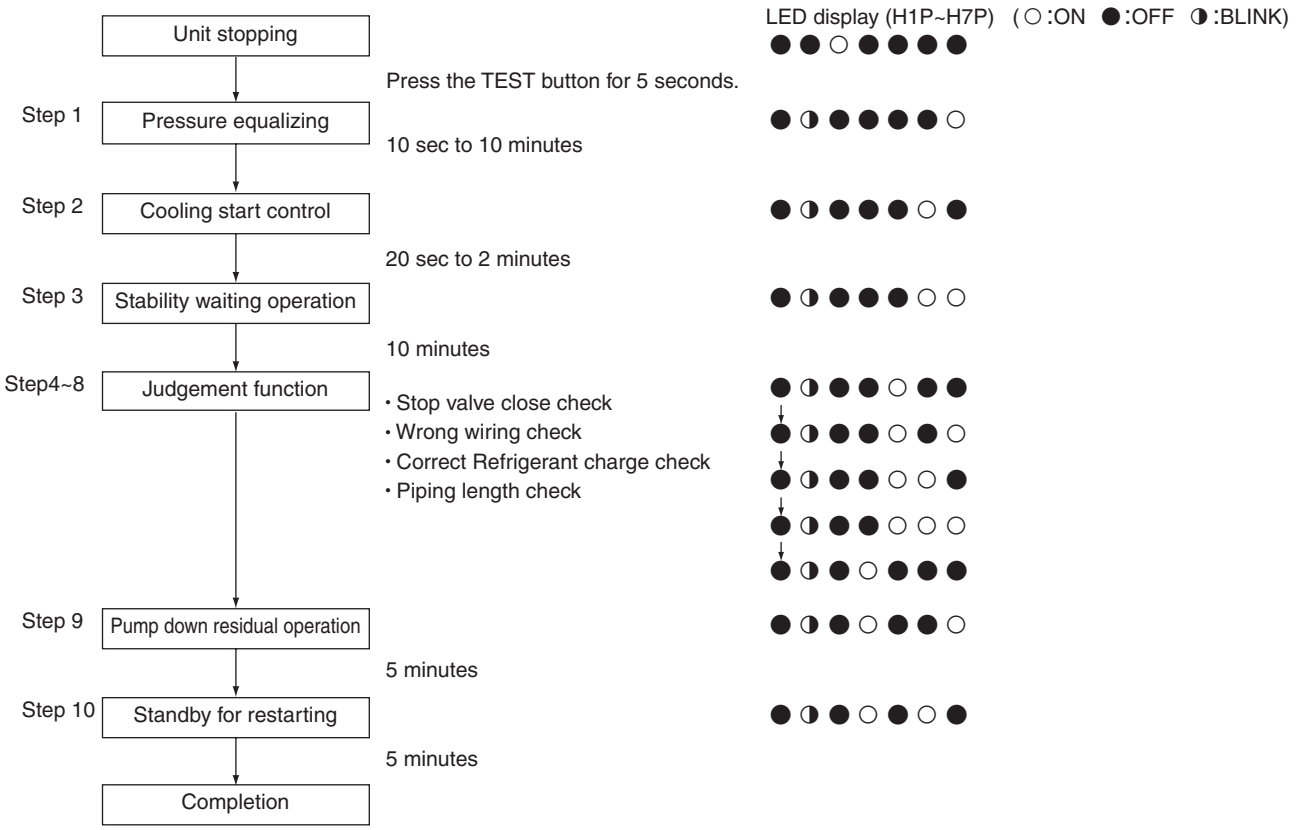

Part 7
Installation and Operation Manual

INSTALLATION MANUAL

Inverter condensing unit

Installation manual Inverter condensing unit	English
Installationsanleitung Invertierer Verflüssiger	Deutsch
Manuel d'installation Groupe condenseur à inverter	Français
Montagehandleiding Condensorunit met inverter	Nederlands
Manual de instalación Unidad condensadora Inverter	Español
Manuale d'installazione Unità di condensazione a inverter	Italiano
Manual de instalação Unidade de condensação com inversor	Portugues
Инструкция по монтажу Инверторный конденсаторный агрегат	русский
Instrukcja montażu Skraplacz typu Inverter	polski

ERQ125A7W1B
ERQ200A7W1B
ERQ250A7W1B

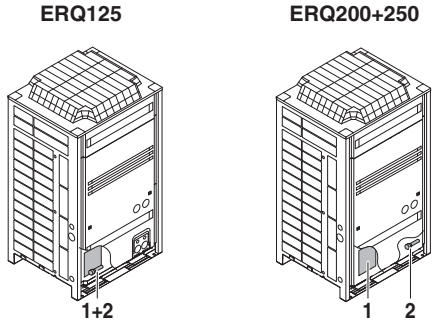

1

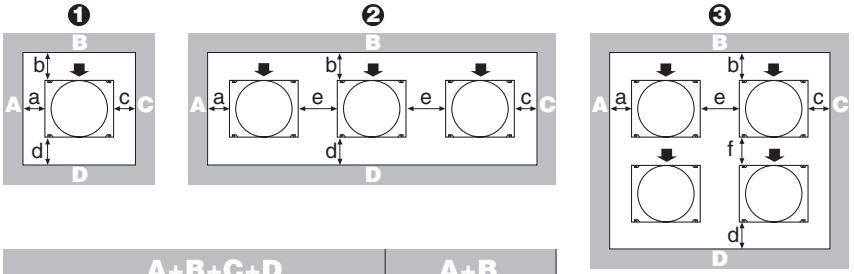

	A+B+C+D		A+B
❶	a ≥10 mm b ≥300 mm c ≥10 mm d ≥500 mm	a ≥50 mm b ≥100 mm c ≥50 mm d ≥500 mm	a ≥200 mm b ≥300 mm
❷	a ≥10 mm b ≥300 mm c ≥10 mm d ≥500 mm e ≥20 mm	a ≥50 mm b ≥100 mm c ≥50 mm d ≥500 mm e ≥100 mm	a ≥200 mm b ≥300 mm e ≥400 mm
❸	a ≥10 mm b ≥300 mm c ≥10 mm d ≥500 mm e ≥20 mm f ≥600 mm	a ≥50 mm b ≥100 mm c ≥50 mm d ≥500 mm e ≥100 mm f ≥500 mm	
❹	a ≥10 mm b ≥300 mm c ≥10 mm d ≥500 mm e ≥20 mm	a ≥50 mm b ≥100 mm c ≥50 mm d ≥500 mm e ≥100 mm	

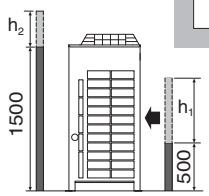

$h_1>0 \rightarrow b \geq b + \frac{h_1}{2}$

$h_2>0 \rightarrow d \geq d + \frac{h_2}{2}$

2

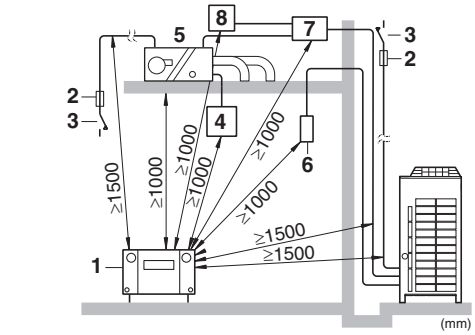

3

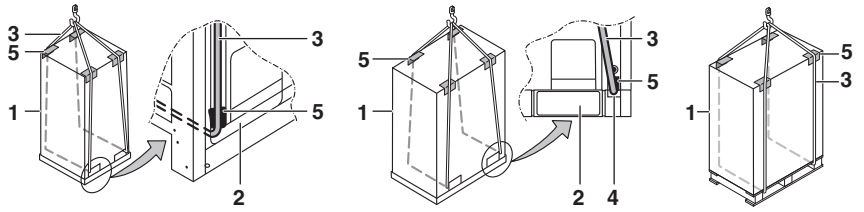

4

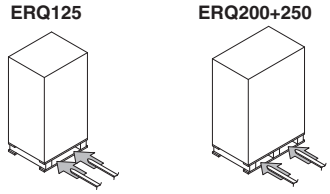

5

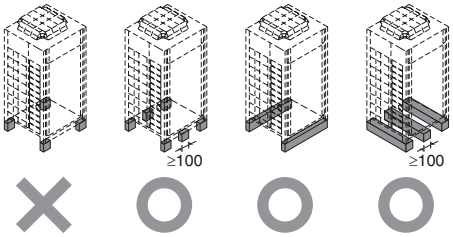

6

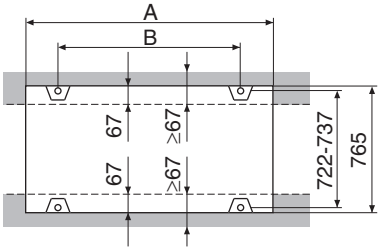

7

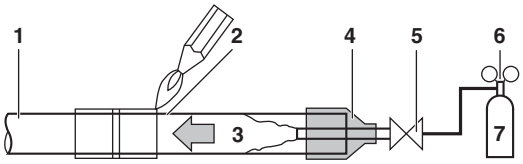

8

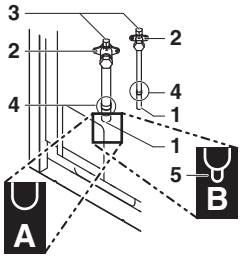

9

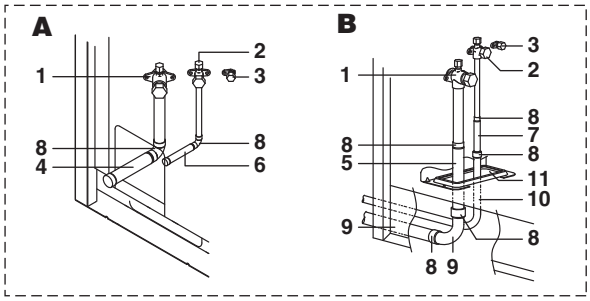

10

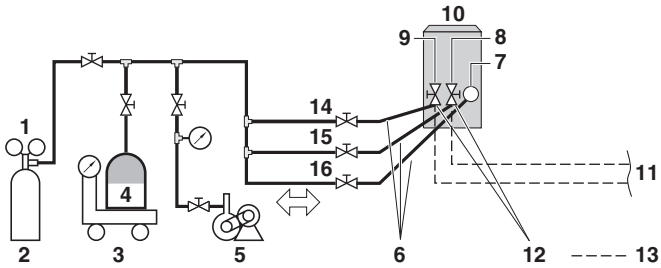

12

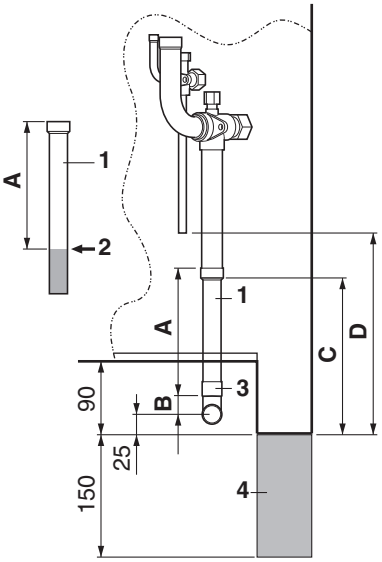

11

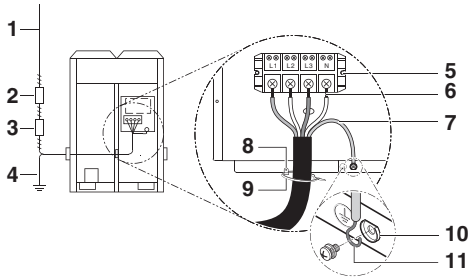

13

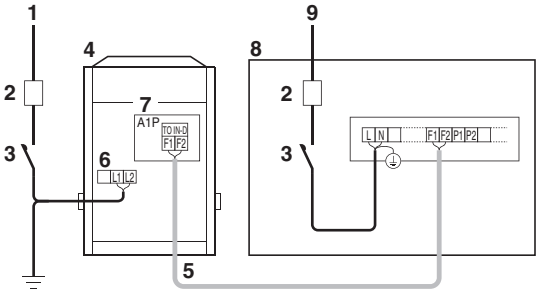

14

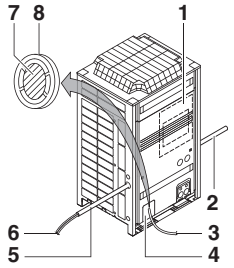

15

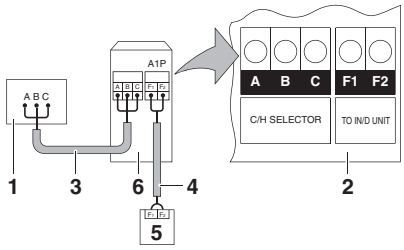

16

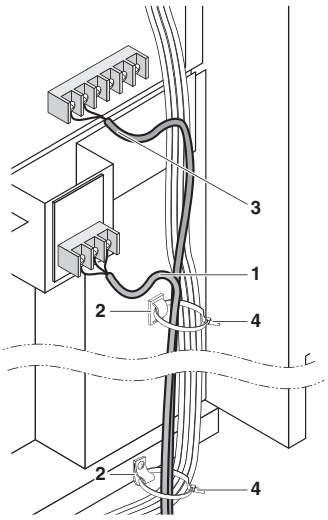

17

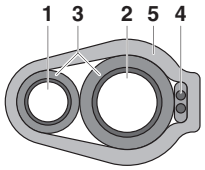

18

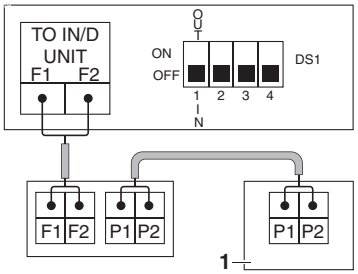

19

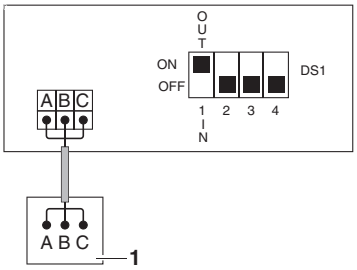

20

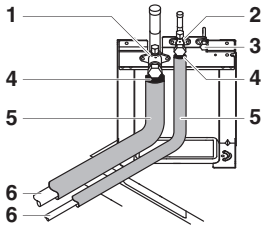

22

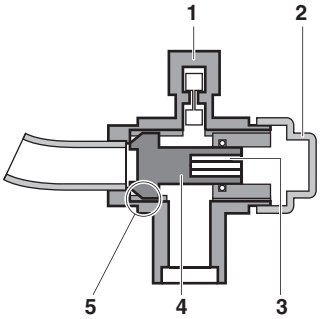

23

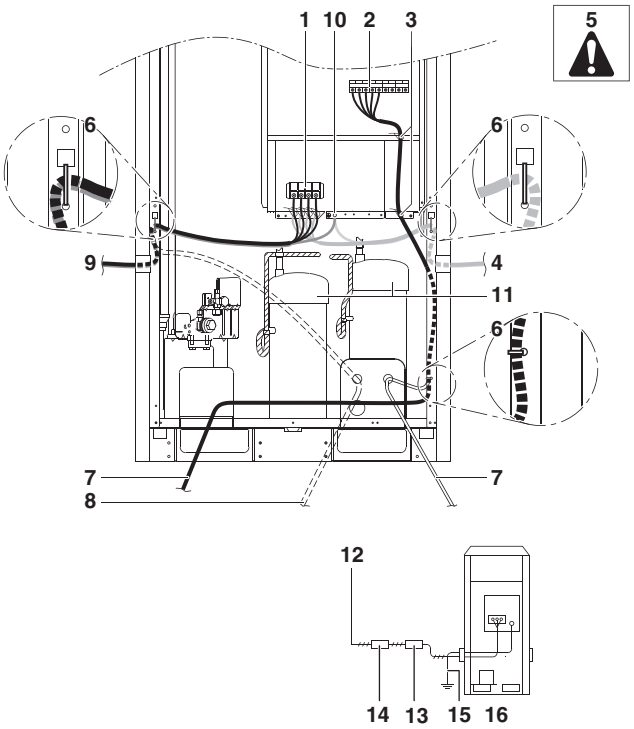

21

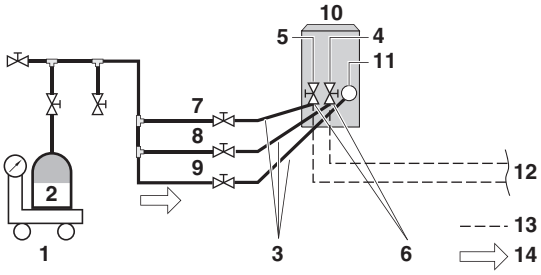

24

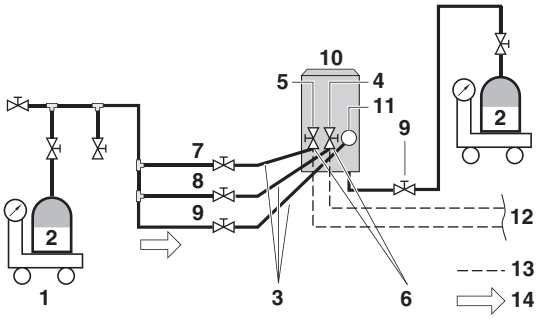

25

CONTENTS

Page

1. Introduction 142
   1.1. Combination 142
   1.2. Standard supplied accessories 142
   1.3. Technical and Electrical specifications 142
2. Main components 142
3. Selection of location 142
4. Inspecting and handling the unit 143
5. Unpacking and placing the unit 143
6. Refrigerant piping 144
   6.1. Installation tools 144
   6.2. Selection of piping material 144
   6.3. Pipe connection 144
   6.4. Connecting the refrigerant piping 144
   6.5. Protection against contamination when installing pipes 146
7. Leak test and vacuum drying 147
8. Field wiring 147
   8.1. Internal wiring – Parts table 148
   8.2. Optional parts cool/heat selector 148
   8.3. Power circuit and cable requirements 149
   8.4. General cautions 149
   8.5. System examples 150
   8.6. Leading power line and transmission line 150
   8.7. Field line connection: cool/heat selection 150
   8.8. Field line connection: power wiring 151
   8.9. Wiring example for wiring inside unit 152
9. Pipe insulation 152
10. Checking of unit and installation conditions 152
11. Charging refrigerant 152
   11.1. Important information regarding the refrigerant used 152
   11.2. Precautions when adding R410A 153
   11.3. Stop valve operation procedure 153
   11.4. Additional refrigerant charge 154
   11.5. Checks after adding refrigerant 154
12. Before operation 155
   12.1. Service precautions 155
   12.2. Checks before initial start-up 155
   12.3. Field setting 155
   12.4. Test operation 157
13. Service mode operation 158
14. Caution for refrigerant leaks 159
15. Disposal requirements 159

READ THIS MANUAL ATTENTIVELY BEFORE STARTING UP THE UNIT. DO NOT THROW IT AWAY. KEEP IT IN YOUR FILES FOR FUTURE REFERENCE.

IMPROPER INSTALLATION OR ATTACHMENT OF EQUIPMENT OR ACCESSORIES COULD RESULT IN ELECTRIC SHOCK, SHORT-CIRCUIT, LEAKS, FIRE OR OTHER DAMAGE TO THE EQUIPMENT. BE SURE ONLY TO USE ACCESSORIES MADE BY DAIKIN WHICH ARE SPECIFICALLY DESIGNED FOR USE WITH THE EQUIPMENT AND HAVE THEM INSTALLED BY A PROFESSIONAL.

DAIKIN EQUIPMENT IS DESIGNED FOR COMFORT APPLICATIONS. FOR USE IN OTHER APPLICATIONS, PLEASE CONTACT YOUR LOCAL DAIKIN DEALER.

IF UNSURE OF INSTALLATION PROCEDURES OR USE, ALWAYS CONTACT YOUR DEALER FOR ADVICE AND INFORMATION.

THIS AIR CONDITIONER COMES UNDER THE TERM "APPLIANCES NOT ACCESSIBLE TO THE GENERAL PUBLIC".

The English text is the original instruction. Other languages are translations of the original instructions.

The refrigerant R410A requires strict cautions for keeping the system clean, dry and tight.

- Clean and dry
  Foreign materials (including mineral oils such as SUNISO oil or moisture) should be prevented from getting mixed into the system.
- Tight
  R410A does not contain any chlorine, does not destroy the ozone layer, and does not reduce the earth's protection against harmful ultraviolet radiation. R410A can contribute slightly to the greenhouse effect if it is released. Therefore we should take special attention to check the tightness of the installation.

Read "6. Refrigerant piping" on page 144 carefully and follow these procedures correctly.

Since design pressure is 4.0 MPa or 40 bar, pipes of larger wall thickness may be required. The wall thickness of piping must be carefully selected, refer to paragraph "6.2. Selection of piping material" on page 144 for more details.

Do NOT connect the system to DIII-net devices:

- intelligent touch Controller
- intelligent Manager
- DMS-IF
- BACnet Gateway
- ...

This could result in malfunction or breakdown of the total system.

1. Introduction

1.1. Combination

The air handling units can be installed in the following range.

- Always use appropriate air handling units compatible with R410A.
  To learn which models of air handling units are compatible with R410A, refer to the product catalogs.
- The manufacturer of this outdoor unit has limited responsibility for total capacity of the system because performance is determined by the total system. The discharge air may fluctuate depending on selected air handling unit and depending on the installation configuration.
- Both air handling unit, digital controller software and hardware are field supply and are to be selected by the installer. Refer to the manual "Option kit for combination of Daikin condensing units with field supplied air handling units" for more details.
  The recommended temperature setting on the field supplied controller is between 16°C and 25°C.
- Refer to the installation and operation manual of the control box or to the Technical Data for allowed heat exchanger combinations.

1.2. Standard supplied accessories

See location 1 in figure 1 for reference to where following accessories are supplied with the unit.

Installation manual	1
Operation manual	1
Fluorinated greenhouse gases label	1
Multilingual fluorinated greenhouse gases label	1

See location 2 in figure 1 for reference to where following accessories are supplied with the unit.

Gas side accessory pipe	
Item	Quantity
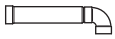	1
	1
Liquid side accessory pipe	
Item	**Quantity**
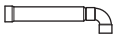	1
	1

1.3. Technical and Electrical specifications

Refer to the Engineering Data Book for the complete list of specifications.

2. Main components

For main components and function of the main components, refer to the Engineering Data Book.

3. Selection of location

- Make sure to provide for adequate measures in order to prevent that the outdoor unit be used as a shelter by small animals.
- Small animals making contact with electrical parts can cause malfunctions, smoke or fire. Please instruct the customer to keep the area around the unit clean.

Obtain the customer's permission before installing.

The inverter units should be installed in a location that meets the following requirements:

1 The foundation is strong enough to support the weight of the unit and the floor is flat to prevent vibration and noise generation.

If not, the unit may fall over and cause damage or injury.

2 The space around the unit is adequate for servicing and the minimum space for air inlet and air outlet is available. (Refer to figure 2 and choose one of the possibilities).

A B C D Sides along the installation site with obstacles

➡ Suction side

- In case of an installation site where sides **A+B+C+D** have obstacles, the wall heights of sides **A+C** have no impact on service space dimensions. Refer to figure 2 for impact of wall heights of sides **B+D** on service space dimensions.
- In case of an installation site where only the sides **A+B** have obstacles, the wall heights have no influence on any indicated service space dimensions.

NOTE The service space dimensions in figure 2 are based on cooling operation at 35°C.

3 Make sure that there is no danger of fire due to leakage of inflammable gas.

4 Ensure that water can not cause any damage to the location in case it drips out the unit (e.g. in case of a blocked drain pipe).

5 The piping length may not exceed the allowable piping length (see "4 Piping length restrictions" on page 146)

6 Select the location of the unit in such a way that neither the discharged air nor the sound generated by the unit disturbs anyone.

7 Make sure that the air inlet and outlet of the unit are not positioned towards the main wind direction. Frontal wind will disturb the operation of the unit. If necessary, use a windscreen to block the wind.

8 Do not install or operate the unit on locations where air contains high levels of salt, like e.g. in the vicinity of oceans. (Refer for further information to the engineering databook).

9 During installation, avoid the possibility that anybody can climb on the unit or place objects on the unit.

Falls may result in injury.

10 When installing the unit in a small room, take measures in order to keep the refrigerant concentration from exceeding allowable safety limits in the event of a refrigerant leak.

Excessive refrigerant concentrations in a closed room can lead to oxygen deficiency.

11 The equipment is not intended for use in a potentially explosive atmosphere.

- The equipment described in this manual may cause electronic noise generated from radio-frequency energy. The equipment complies to specifications that are designed to provide reasonable protection against such interference. However, there is no guarantee that interference will not occur in a particular installation.
  It is therefore recommended to install the equipment and electric wires keeping proper distances away from stereo equipment, personal computers, etc...
  (See figure 3).

1	Personal computer or radio
2	Fuse
3	Earth leakage breaker
4	Remote control
5	Cool/heat selector
6	Air handling unit
7	Control box
8	Expansion valve kit

  In places with weak reception, keep distances of 3 m or more to avoid electromagnetic disturbance of other equipment and use conduit tubes for power and transmission lines.
- In heavy snowfall areas, select an installation site where snow will not affect the operation of the unit.
- The refrigerant R410A itself is nontoxic, nonflammable and is safe. If the refrigerant should leak however, its concentration may exceed the allowable limit depending on room size. Due to this, it could be necessary to take measures against leakage. Refer to the chapter "Caution for refrigerant leaks".
- Do not install in the following locations.
  - Locations where sulfurous acids and other corrosive gases may be present in the atmosphere.
    Copper piping and soldered joints may corrode, causing refrigerant to leak.
  - Locations where a mineral oil mist, spray or vapour may be present in the atmosphere.
    Plastic parts may deteriorate and fall off or causing water leakage.
  - Locations where equipment that produces electro-magnetic waves is found.
    The electromagnetic waves may cause the control system to malfunction, preventing normal operation.
  - Locations where flammable gases may leak, where thinner, gasoline, and other volatile substances are handled, or where carbon dust and other incendiary substances are found in the atmosphere.
    Leaked gas may accumulate around the unit, causing an explosion.
- When installing, take strong winds, typhoons or earthquakes into account.
  Improper installation may result in fall over of the unit.

4. Inspecting and handling the unit

At delivery, the package should be checked and any damage should be reported immediately to the carrier claims agent.

When handling the unit, take into account the following:

1 Fragile, handle the unit with care.

Keep the unit upright in order to avoid compressor damage.

2 Choose on beforehand the path along which the unit is to be brought in.

3 Bring the unit as close as possible to its final installation position in its original package to prevent damage during transport. (See figure 4)

1	Packaging material
2	Opening (large)
3	Belt sling
4	Opening (small) (40x45)
5	Protector

4 Lift the unit preferably with a crane and 2 belts of at least 8 m long. (See figure 4)

Always use protectors to prevent belt damage and pay attention to the position of the unit's centre of gravity.

NOTE Use a belt sling of ≤ 20 mm wide that adequately bears the weight of the unit.

5 If a forklift is to be used, preferably transport the unit with pallet first, then pass the forklift arms through the large rectangular openings on the bottom of the unit. (See figure 5)

5.1 From the moment you use a forklift to move the unit to its final position, lift the unit under the pallet.

5.2 Once at final position, unpack the unit and pass the forklift arms through the large rectangular openings on the bottom of the unit.

NOTE Use filler cloth on the forklift arms to prevent damaging the unit. If the paint on the bottom frame peels off, the anti corrosion effect may decrease.

5. Unpacking and placing the unit

- Remove the four screws fixing the unit to the pallet.
- Make sure the unit is installed level on a sufficiently strong base to prevent vibration and noise.

Do not use stands to only support the corners. (See figure 6)

X	Not allowed (except for ERQ125)
O	Allowed (units: mm)

- Make sure the base under the unit is larger than the 765 mm of the unit depth. (See figure 7)
- The height of the foundation must at least be 150 mm from the floor.
- The unit must be installed on a solid longitudinal foundation (steelbeam frame or concrete) as indicated in figure 7.

Model	A	B
ERQ125	635	497
ERQ200+250	930	792

- Support the unit with a foundation of 67 mm wide or more. (The support leg of the unit is 67 mm wide, see figure 7).
- Fasten the unit in place using four foundation bolts M12. It is best to screw in the foundation bolts until their length remains 20 mm above the foundation surface.

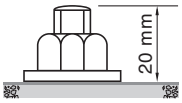

- Prepare a water drainage channel around the foundation to drain waste water from around the unit.
- If the unit is to be installed on a roof, check the strength of the roof and its drainage facilities first.
- If the unit is to be installed on a frame, install the waterproofing board within a distance of 150 mm under the unit in order to prevent infiltration of water coming from under the unit.
- When installed in a corrosive environment, use a nut with plastic washer (1) to protect the nut tightening part from rust.

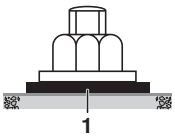

6. Refrigerant piping

Do not insert fingers, rods or other objects into the air inlet or outlet. When the fan is rotating at high speed, it will cause injury.

Use R410A to add refrigerant.

All field piping must be installed by a licensed refrigeration technician and must comply with relevant local and national regulations.

Caution to be taken when brazing refrigerant piping

Do not use flux when brazing copper-to-copper refrigerant piping. (Particularly for the HFC refrigerant piping) Therefore, use the phosphor copper brazing filler metal (BCuP) which does not require flux.

Flux has extremely harmful influence on refrigerant piping systems. For instance, if the chlorine based flux is used, it will cause pipe corrosion or, in particular, if the flux contains fluorine, it will damage the refrigerant oil.

Be sure to perform a nitrogen blow when brazing. Brazing without performing nitrogen replacement or releasing nitrogen into the piping will create large quantities of oxidized film on the inside of the pipes, adversely affecting valves and compressors in the refrigerating system and preventing normal operation.

After completing the installation work, check that the refrigerant gas does not leak.

Toxic gas may be produced if the refrigerant gas leaks into the room and comes in contact with a source of fire.

Ventilate the area immediately in the event of a leak.

In the event of a leak, do not touch the leaked refrigerant directly. Frostbite may be caused.

6.1. Installation tools

Make sure to use installation tools (gauge manifold charge hose, etc.) that are exclusively used for R410A installations to withstand the pressure and to prevent foreign materials (e.g. mineral oils such as SUNISO and moisture) from mixing into the system.

Use a 2-stage vacuum pump with a non-return valve which can evacuate to –100.7 kPa (5 Torr, –755 mm Hg).

NOTE Make sure the pump oil does not flow oppositely into the system while the pump is not working.

6.2. Selection of piping material

1. Foreign materials inside pipes (including oils for fabrication) must be 30 mg/10 m or less.
2. Use the following material specification for refrigerant piping:
   - Construction material: phosphoric acid deoxidized seamless copper for refrigerant.
   - Temper grade: use piping with temper grade in function of the pipe diameter as listed in the table below.

Pipe Ø	Temper grade of piping material
≤ 15.9	O
≥ 19.1	1/2H

O = Annealed
1/2H = Half hard

   - The pipe thickness of the refrigerant piping should comply with relevant local and national regulations. The minimal pipe thickness for R410A piping must be in accordance with the table below.

Pipe Ø	Minimal thickness t (mm)
9.5	0.80
15.9	0.99
19.1	0.80
22.2	0.80

3. In case the required pipe sizes (inch sizes) are not available, it is also allowed to use other diameters (mm sizes), taken the following into account:
   - select the pipe size nearest to the required size.
   - use the suitable adapters for the change-over from inch to mm pipes (field supply).

6.3. Pipe connection

Be sure to perform a nitrogen blow when brazing and to read the paragraph " Caution to be taken when brazing refrigerant piping" on page 144 first.

NOTE The pressure regulator for the nitrogen released when doing the brazing should be set to 0.02 MPa or less. (See figure 8)

1	Refrigerant piping
2	Location to be brazed
3	Nitrogen
4	Taping
5	Manual valve
6	Regulator
7	Nitrogen

Do not use anti-oxidants when brazing the pipe joints.

Residue can clog pipes and break equipment.

6.4. Connecting the refrigerant piping

1 Front connection or side connection

Installation of refrigerant piping is possible as front connection or side connection (when taken out from the bottom) as shown in the figure.

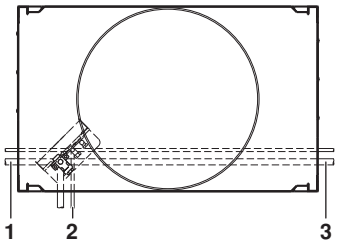

1	Left-side connection
2	Front connection
3	Right-side connection

NOTE

Precautions when knocking out knock holes

- Be sure to avoid damaging the casing
- After knocking out the holes, we recommend you remove the burrs and paint the edges and areas around the edges using the repair paint to prevent rusting.
- When passing electrical wiring through the knock holes, wrap the wiring with protective tape to prevent damage.

2 Removing the pinched piping (See figure 9)

Any gas or oil remaining inside the stop valve may blow off the pinched piping. Failure to observe the instructions in procedure below properly may result in property damage or personal injury, which may be serious depending on the circumstances.

Use the following procedure to remove the pinched piping:

1. Remove the valve lid and make sure that the stop valves are fully closed.

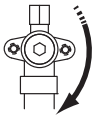

2. Connect a charge hose to service ports of all stop valves.
3. Recover gas and oil from the pinched piping by using a recovery unit.

   Do not vent gases into the atmosphere.

4. When all gas and oil is recovered from the pinched piping, disconnect the charge hose and close the service ports.
5. In case the pinched piping lower parts looks like detail A in figure 9, proceed with procedure step 8. In case the pinched piping lower part looks like detail B in figure 9, follow instructions as per procedure steps 6-7-8.
6. Cut off the lower part of the smaller pinched piping with an appropriate tool (e.g. a pipe cutter, a pair of nippers,...) so that a cross-section is open allowing remaining oil to drip out in case the recovery was not complete.
7. Wait until all oil is dripped out.
8. Dissolve the brazing using a burner and remove the pinched piping or cut the pinched piping off with a pipe cutter.

See figure 9.

1	Pinched piping
2	Stop valve
3	Service port
4	Point of melting the brazing metal
5	Small lower piece of pipe

Precautions when connecting field piping.

- Perform brazing at the gas stop valve before brazing at the liquid stop valve.
- Add brazing material as shown in the figure.

- Be sure to use the supplied accessory pipes when carrying out piping work in the field.
- Be sure that the field installed piping does not touch other pipes, the bottom panel or side panel. Especially for the bottom and side connection, be sure to protect the piping with suitable insulation, to prevent it from coming into contact with the casing.

3 Piping connections

(See figure 10)

- Front connection:
  Remove the stop valve cover to connect.
- Bottom connection:
  Remove the knock holes on the bottom frame and route the piping under the bottom frame.

A	Front connection Remove the stop valve cover to connect.
B	Bottom connection: Remove the knock holes on the bottom frame and route the piping under the bottom frame
1	Gas pipe stop valve
2	Liquid pipe stop valve
3	Service port for adding refrigerant
4	Gas side accessory pipe (1)
5	Gas side accessory pipe (2)
6	Liquid side accessory pipe (1)
7	Liquid side accessory pipe (2)
8	Brazing
9	Gas side piping (field supply)
10	Liquid side piping (field supply)
11	Punch the knockout holes (use a hammer)

- Processing the gas side accessory pipe (2)
  Only in case of connecting at lateral side, cut the gas side accessory pipe (2) as shown in figure 11.

1	Gas side accessory pipe
2	Cutting location
3	Gas side piping (field supply)
4	Base

Model		A	B	C	D
ERQ125	(mm)	166	16	199	246
ERQ200	(mm)	156	17	188	247
ERQ250	(mm)	156	23	192	247

NOTE

- When connecting the piping on site, be sure to use the accessory piping.
- Make sure the onsite piping does not come into contact with other piping, the bottom frame or side panels of the unit.

4 Piping length restrictions

4.1 Installation limitations

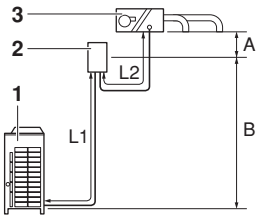

1	Outdoor unit
2	Expansion valve kit
3	Air handling unit

	Max (m)	Min (m)
L1	50	5
L2	5	—
A	–5 / +5(*)	—
B	–30 / +30(*)	—

(*) Below or above the outdoor unit.

4.2 How to calculate the additional refrigerant to be charged

Additional refrigerant to be charged R (kg)
R should be rounded off in units of 0.1 kg

R=(Total length (m) of liquid piping size at Ø9.5)x0.059

Determine the weight of refrigerant to be charged additionally referring to the item "Additional refrigerant charge" on page 154 and fill in the amount on the fluorinated greenhouse gas label.

4.3 Diameters

Outdoor unit type	Piping size (mm) Gas	Liquid
125	Ø15.9	Ø9.5
200	Ø19.1	Ø9.5
250	Ø22.2	Ø9.5

6.5. Protection against contamination when installing pipes

- Take measures to prevent foreign materials like moisture and contamination from mixing into the system.

	Installation period	Protection method
	More than a month	Pinch the pipe
	Less than a month	Pinch or tape the pipe
	Regardless of the period	

- Great caution is needed when passing copper tubes through walls.
- Block all gaps in the holes for passing out piping and wiring using sealing material (field supply). (The capacity of the unit will drop and small animals may enter the machine.)
  Example: passing piping out through the front

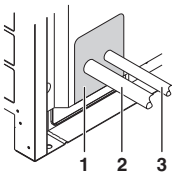

1	Plug the areas marked with "▒". (When the piping is routed from the front panel.)
2	Gas side piping
3	Liquid side piping

After all the piping has been connected, make sure there is no gas leak. Use nitrogen to perform a gas leak check.

7. LEAK TEST AND VACUUM DRYING

The units were checked for leaks by the manufacturer.

After connecting the field piping, perform the following inspections.

1 Preparations

Referring to figure 12, connect a nitrogen tank, a cooling tank, and a vacuum pump to the outdoor unit and perform the airtightness test and the vacuum drying. The stop valve and valves A and B in figure 12 should be open and closed as shown in the table below when performing the airtightness test and vacuum drying.

1	Pressure reducing valve
2	Nitrogen
3	Measuring instrument
4	Tank (siphon system)
5	Vacuum pump
6	Charge hose
7	Service port for adding refrigerant
8	Liquid line stop valve
9	Gas line stop valve
10	Outdoor unit
11	To air handling unit
12	Stop valve service port
13	Dotted lines represent on site piping
14	Valve B
15	Valve C
16	Valve A

State of the valves A and B and the stop valve	Valve A	Valve B	Valve C	Liquid side stop valve	Gas side stop valve
Performing the airtightness test and vacuum drying (Valve A must always be shut. Otherwise the refrigerant in the unit will pour out.)	Close	Open	Open	Close	Close

2 Airtightness test and vacuum drying

NOTE

Make sure to perform airtightness test and vacuum drying using the service ports of the stop valves of the liquid side and of the gas side. (For the service port location, refer to the "Caution" label attached on the front panel of the outdoor unit.)

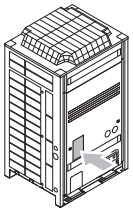

- See "11.3. Stop valve operation procedure" on page 153 for details on handling the stop valve.
- To prevent entry of any contamination and to prevent insufficient pressure resistance, always use the special tools dedicated for working with R410A refrigerant.

- Airtightness test:

NOTE Make sure to use nitrogen gas.

Pressurize the liquid and gas pipes to 4.0 MPa (40 bar) (do not pressurize more than 4.0 MPa (40 bar)). If the pressure does not drop within 24 hours, the system passes the test. If the pressure drops, check where the nitrogen leaks from.

- Vacuum drying: Use a vacuum pump which can evacuate to –100.7 kPa (5 Torr, –755 mm Hg)

1. Evacuate the system from the liquid and gas pipes by using a vacuum pump for more than 2 hours and bring the system to –100.7 kPa. After keeping the system under that condition for more than 1 hour, check if the vacuum gauge rises or not. If it rises, the system may either contain moisture inside or have leaks.

2. Following should be executed if there is a possibility of moisture remaining inside the pipe (if piping work is carried out during the raining season or over a long period of time, rainwater may enter the pipe during work).
After evacuating the system for 2 hours, pressurize the system to 0.05 MPa (vacuum break) with nitrogen gas and evacuate the system again using the vacuum pump for 1 hour to –100.7 kPa (vacuum drying). If the system can not be evacuated to –100.7 kPa within 2 hours, repeat the operation of vacuum break and vacuum drying.
Then, after leaving the system in vacuum for 1 hour, confirm that the vacuum gauge does not rise.

8. FIELD WIRING

All field wiring and components must be installed by a licensed electrician and must comply with relevant local and national regulations.

The field wiring must be carried out in accordance with the wiring diagrams and the instructions given below.

Be sure to use a dedicated power circuit. Never use a power supply shared by another appliance. This can lead to electric shock or fire.

Be sure to install an earth leakage circuit breaker.
(Because this unit uses an inverter, install an earth leakage circuit breaker that is capable of handling high harmonics in order to prevent malfunctioning of the earth leakage breaker itself.)

Do not operate until refrigerant piping work is completed.
(If operated before completion of the piping work, the compressor may break down.)

Never remove a thermistor, sensor, etc., when connecting power wiring and transmission wiring.
(If operated without thermistor, sensor, etc., the compressor may break down.)

The reversed phase protection detector of this product only functions when the product starts up. Consequently, reversed phase detection is not performed during normal operation of the product.

The reversed phase protection detector is designed to stop the product in the event of an abnormality when the product is started up.

Replace two of the three phases (L1, L2, and L3) during reverse-phase protection circuit operation.

If the possibility of reversed phase exists after a momentary blackout and the power goes on and off while the product is operating, attach a reversed phase protection circuit locally. Running the product in reversed phase can break the compressor and other parts.

Means for disconnection must be incorporated in the field wiring in accordance with the wiring rules.
(An all-pole disconnection switch must be available on the unit.)

8.1. Internal wiring – Parts table

Refer to the wiring diagram sticker on the unit. The abbreviations used are listed below:

A1P~A7P ..... Printed circuit board
BS1~BS5 ..... Push button switch (mode, set, return, test, reset)
C1,C63,C66 ..... Capacitor
DS1,DS2 ..... Dip switch
E1HC~E3HC ..... Crankcase heater
F1U ..... Fuse (650 V, 8 A, B) (A4P) (A8P)
F1U,F2U..... Fuse (250 V, 3.15 A, T) (A1P)
F5U ..... Field fuse
F400U ..... Fuse (250 V, 6.3 A, T) (A2P)
H1P~H8P ..... Pilot lamp (service monitor - orange)
H2P: Under preparation or in test operation when blinking
H2P: Malfunction detection when light up
HAP..... Pilot lamp (service monitor - green)
K1..... Magnetic relay
K2..... Magnetic contactor (MIC)
K2M,K3M ..... Magnetic contactor (M2C,M3C) (only for ERQ250)
K1R,K2R ..... Magnetic relay (K2M,K3M)
K3R~K5R ..... Magnetic relay (Y1S~Y3S)
K6R~K9R ..... Magnetic relay (E1HC~E3HC)
L1R..... Reactor
M1C~M3C ..... Motor (compressor)
M1F,M2F ..... Motor (fan)
PS ..... Switching power supply (A1P,A3P)
Q1DI..... Earth leakage breaker (field supply)
Q1RP ..... Phase reversal detection circuit
R1T..... Thermistor (fin) (A2P)
R1T..... Thermistor (air) (A1P)
R2T ..... Thermistor (suction)
R4T ..... Thermistor (coil-deicer)
R5T ..... Thermistor (coil-outlet)
R6T ..... Thermistor (liquid-pipe receiver)
R7T ..... Thermistor (accumulator)
R10..... Resistor (current sensor) (A4P) (A8P)
R31T~R33T..... Thermistor (discharge) (M1C~M3C)
R50,R59 ..... Resistor
R95..... Resistor (current limiting)
S1NPH ..... Pressure sensor (high)
S1NPL..... Pressure sensor (low)
S1PH,S3PH ..... Pressure switch (high)
SD1 ..... Safety devices input
T1A..... Current sensor (A6P,A7P)
V1R ..... Power module (A4P,A8P)
V1R,V2R ..... Power module (A3P)
X1A,X4A..... Connector (M1F,M2F)
X1M..... Terminal strip (power supply)
X1M..... Terminal strip (control) (A1P)
X1M..... Terminal strip (A5P)
Y1E,Y2E..... Expansion valve (electronic type) (main, subcool)
Y1S ..... Solenoid valve (hotgas bypass)
Y2S ..... Solenoid valve (oil return)
Y3S ..... Solenoid valve (4 way valve)
Y4S ..... Solenoid valve (injection)
Z1C~Z7C..... Noise filter (ferrite core)
Z1F..... Noise filter (with surge absorber)

L1,L2,L3 ..... Live
N..... Neutral
..... Field wiring
..... Terminal strip
..... Connector
..... Terminal
..... Protective earth (screw)
BLK..... Black
BLU ..... Blue
BRN..... Brown
GRN ..... Green
GRY..... Grey
ORG ..... Orange
PNK..... Pink
RED..... Red
WHT ..... White
YLW..... Yellow

NOTE

- This wiring diagram only applies to the outdoor unit.
- When using the option adapter, refer to the installation manual.
- Refer to the installation manual, for connection wiring to indoor-outdoor transmission F1-F2, and on how to use BS1~BS5 and DS1, DS2 switch.
- Do not operate the unit by short-circuiting protection device S1PH.

8.2. Optional parts cool/heat selector

S1S..... Selector switch (fan, cool/heat)
S2S..... Selector switch (cool/heat)

NOTE

- Use copper conductors only.
- For connection wiring to the central remote control, refer to the installation manual of the central remote control.
- Use insulated wire for the power cord.

8.3. Power circuit and cable requirements

A power circuit (see table below) must be provided for connection of the unit. This circuit must be protected with the required safety devices, i.e. a main switch, a slow blow fuse on each phase and an earth leakage breaker.

	Phase and frequency	Voltage	Minimum circuit ampere	Recommended fuses	Transmission line section
ERQ125	3N~ 50 Hz	400 V	11.9 A	16 A	0.75~1.25 mm^2
ERQ200	3N~ 50 Hz	400 V	18.5 A	25 A	0.75~1.25 mm^2
ERQ250	3N~ 50 Hz	400 V	21.6 A	25 A	0.75~1.25 mm^2

When using residual current operated circuit breakers, be sure to use a high-speed type 300 mA rated residual operating current.

Point for attention regarding quality of the public electric power supply

This equipment complies with respectively:

- EN/IEC 61000-3-11(1) provided that the system impedance Z_{sys} is less than or equal to Z_{max} and
- EN/IEC 61000-3-12(2) provided that the short-circuit power S_{sc} is greater than or equal to the minimum S_{sc} value

at the interface point between the user's supply and the public system. It is the responsibility of the installer or user of the equipment to ensure, by consultation with the distribution network operator if necessary, that the equipment is connected only to a supply with respectively:

- Z_{sys} less than or equal to Z_{max} and
- S_{sc} greater than or equal to the minimum S_{sc} value.

	Z_{max} (Ω)	Minimum S_{sc} value
ERQ125	—	—
ERQ200	—	889 kVA
ERQ250	0.27	842 kVA

Be sure to install a main switch for the complete system.

NOTE

- Select the power supply cable in accordance with relevant local and national regulations.
- Wire size must comply with the applicable local and national code.
- Specifications for local wiring power cord and branch wiring are in compliance with IEC60245.
- WIRE TYPE H05VV(*)
  *Only in protected pipes (use H07RN-F when protected pipes are not used).

8.4. General cautions ⚠

- Up to 3 units can be connected by crossover power source wiring between outdoor units. However, units of smaller capacity must be connected downstream. For details, refer to the technical data.
- Make sure to connect the power source wire to the power source terminal block and to clamp it as shown in figure 13 and described in chapter "8.8. Field line connection: power wiring" on page 151.
- For conditional connections, refer to the Technical Data.
- As this unit is equipped with an inverter, installing a phase advancing capacitor not only will deteriorate power factor improvement effect, but also may cause capacitor abnormal heating accident due to high-frequency waves. Therefore, never install a phase advancing capacitor.
- Keep power imbalance within 2% of the supply rating.
  - Large imbalance will shorten the life of the smoothing capacitor.
  - As a protective measure, the product will stop operating and an error indication will be made, when power imbalance exceeds 4% of the supply rating.
- Follow the "electrical wiring diagram" supplied with the unit when carrying out any electrical wiring.
- Only proceed with wiring work after all power is shut off.
- Always ground wires. (In accordance with national regulations of the pertinent country.)
- Do not connect the ground wire to gas pipes, sewage pipes, lightning rods, or telephone ground wires. This may cause electric shock.
  - Combustion gas pipes: can explode or catch fire if there is a gas leak.
  - Sewage pipes: no grounding effect is possible if hard plastic piping is used.
  - Telephone ground wires and lightning rods: dangerous when struck by lightning due to abnormal rise in electrical potential in the grounding.
- This unit uses an inverter, and therefore generates noise, which will have to be reduced to avoid interfering with other devices. The outer casing of the product may take on an electrical charge due to leaked electrical current, which will have to be discharged with the grounding.
- Be sure to install an earth leakage breaker. (One that can handle high-frequency electrical noise.)
  (This unit uses an inverter, which means that an earth leakage breaker capable of handling high-frequency electrical noise must be used in order to prevent malfunctioning of the earth leakage breaker itself.)
- Earth leakage breakers that are especially designed for protecting ground-faults must be used in conjunction with main switch and fuse for use with wiring.
- Never connect the power supply in reversed phase.
  The unit can not operate normally in reversed phase. If you connect in reversed phase, replace two of the three phases.
- This unit has a reverse phase detection circuit. (If it is activated, only operate the unit after correcting the wiring.)

⚠ A main switch or other means for disconnection, having a contact separation in all poles, must be incorporated in the fixed wiring in accordance with relevant local and national legislation.

- Power supply wires must be attached securely.
- If the power supply has a missing or wrong N-phase, equipment will break down.
- Make sure that all wiring is secure, the specified wires are used, and no external forces act on the terminal connection or wires.
- Improper connections or installation may result in fire.
- When wiring the power supply and connecting the remote control wiring and transmission wiring, position the wires so that the control box lid can be securely fastened.
  Improper positioning of the control box lid may result in electric shocks, fire, or overheating of the terminals.

(1) European/International Technical Standard setting the limits for voltage changes, voltage fluctuations and flicker in public low-voltage supply systems for equipment with rated current ≤ 75 A.
(2) European/International Technical Standard setting the limits for harmonic currents produced by equipment connected to public low-voltage systems with input current >16 A and ≤ 75 A per phase.

8.5. System examples

(See figure 14)

1 Field power supply outdoor unit (400 V)
2 Fuse
3 Earth leakage breaker
4 Outdoor unit
5 To control box
Use the conductor of sheathed wire (2 wire) (16 V, no polarity)
6 Power supply terminal
7 Outdoor unit PC board (A1P)
8 Control box
9 Field power supply control box (sheathed wire) (230 V)

8.6. Leading power line and transmission line

- Be sure to let the power line and the transmission line pass through a conduit hole.
- Lead the power line from the upper hole on the left side plate, from the front position of the main unit (through the conduit hole of the wiring mounting plate) or from a knock out hole to be made in the unit's bottom plate. (See figure 15)

1 Electric wiring diagram. Printed on the back of the electric box lid.
2 Power wiring and ground wiring between outdoor units (inside conduit)
(When the wiring is routed out through the lateral panel.)
3 Transmission wiring
4 Pipe opening
5 Conduit
6 Power wiring and ground wiring
7 Cut off the shaded zones before use.
8 Through cover

Precautions when knocking out knockout holes

- To punch a knockout hole, hit on it with a hammer.
- After knocking out the holes, we recommend you paint the edges and areas around the edges using the repair paint to prevent rusting.
- When passing electrical wiring through the knockout holes, remove any burrs from the knockout hole edges. Wrap the wiring with protective tape in order to prevent damage to the wires, put the wires through field supplied protective wire conduits at that location, or install suitable field supplied wire nipples or rubber bushings into the knockout holes.

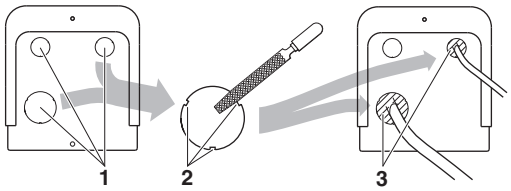

1 Knockout hole
2 Burr
3 If there are any possibilities that small animals enter the system through the knockout holes, plug the holes with packing materials (to be prepared on-site).

- Use a power wire pipe for the power wiring.
- Outside the unit, make sure the weak low voltage electric wiring (i.e. for the remote control, between units, etc.) and the high voltage electric wiring do not pass near each other, keeping them at least 50 mm apart. Proximity may cause electrical interference, malfunctions, and breakage.
- Be sure to connect the power wiring to the power wiring terminal block and secure it as described under "8.8. Field line connection: power wiring" on page 151.
- Inter-unit wiring should be secured as described in "8.7. Field line connection: cool/heat selection" on page 150.
  - Secure the wiring with the accessory clamps so that it does not touch the piping and no external force can be applied to the terminal.
  - Make sure the wiring and the electric box lid do not stick up above the structure, and close the cover firmly.

8.7. Field line connection: cool/heat selection

(See figure 16)

1 Cool/heat selector
2 Outdoor unit PC board (A1P)
3 Take care of the polarity
4 Use the conductor of sheathed wire (2 wire) (no polarity)
5 Control box
6 Outdoor unit

Fixing transmission wiring (See figure 17)

Inside switchbox

1 Heating/cooling switching remote control cord (when a heating/cooling switch remote control (optional) or field supplied control box is connected) (ABC)
2 Fix to the indicated plastic brackets using field supplied clamping material.
3 Wiring between the units (control box - outdoor) (F1+F2 left)
4 Plastic bracket

Outside unit

- Never connect the power supply to transmission wiring terminal block. Otherwise the entire system may break down.
- Never connect 400 V to the terminal block of the interconnecting wiring. Doing so will break the entire system.
  - The wiring from the control box must be connected to the F1/F2 (In-Out) terminals on the PC board in the outdoor unit.
  - After installing the interconnecting wires inside the unit, wrap them along with the on-site refrigerant pipes using finishing tape, as shown in figure 18.

1 Liquid pipe
2 Gas pipe
3 Insulator
4 Interconnecting wiring
5 Finishing tape

For the above wiring, always use vinyl cords with 0.75 to 1.25 mm^2 sheath or cables (2-core wires). (3-core wire cables are allowable for the cooler/heater changeover remote control only.)

- Be sure to keep the power line and transmission line apart from each other.
- Be careful about polarity of the transmission line.
- Make sure that the transmission line is clamped as shown in figure 20.
- Check that wiring lines do not make contact with refrigerant piping.
- Firmly close the lid and arrange the electrical wires so as to prevent the lid or other parts from coming loose.
- When you do not use a wire conduit, be sure to protect the wires with vinyl tubes etc, to prevent the edge of the knock-out hole from cutting the wires.

Setting the cool/heat operation

1 Performing cool/heat setting with the remote control connected to the control box.

Keep the cool/heat selector switch (DS1) on the outdoor unit PC board at the factory setting position IN/D UNIT. (See figure 19)

1 Remote control

2 Performing cool/heat setting with the cool/heat selector.

Connect the cool/heat selector remote control (optional) to the A/B/C terminals and set the cool/heat selector switch (DS1) on the outdoor unit PC board (A1P) to OUT/D UNIT. (See figure 20)

1 Cool/heat selector

3 Perform cool/heat setting with the field supplied controller.

Set the cool/heat selector switch (DS1) on the outdoor unit PC board (A1P) to OUT/D UNIT. (See figure 20).
Connect the A/B/C terminals with the field supplied controller so that:
- A/B/C terminals are not connected for cooling operation
- A and C terminals are short-circuited for heating operation
- B and C are short-circuited for fan only operation

For low-noise operation, it is necessary to get the optional 'External control adapter for outdoor unit' (DTA104A61/62).

For details, see the installation manual attached to the adapter.

8.8. Field line connection: power wiring

The power cord must be clamped to the plastic bracket using field supplied clamp material.

The green and yellow striped wrapped wires must be used for grounding. (See figure 13)

1 Power supply (400 V, 3N~ 50 Hz)
2 Fuse
3 Earth leakage breaker
4 Grounding wire
5 Power supply terminal block
6 Connect each power wire
RED to L1, WHT to L2, BLK to L3 and BLU to N
7 Ground wire (GRN/YLW)
8 Clamp the power wire to the plastic bracket using a field supplied clamp to prevent external force being applied to the terminal.
9 Clamp (field supply)
10 Cup washer
11 When connecting the earth wire, it is recommended to perform curling.

- When routing ground wires, secure clearance of 50 mm or more away from compressor lead wires. Failure to observe this instruction properly may adversely effect correct operation of other units connected to the same ground.
- When connecting the power supply cord, the earth connection must be made before the current-carrying connections are established. When disconnecting the power supply cord, the current-carrying connections must be separated before the earth connection is. Length of the conductors between the power supply cord anchorage and the terminal block itself must be such that the current-carrying conductors are tautened before the earthing conductor is in case the power supply cord is pulled loose from the cord anchorage.

Precautions when laying power wiring

- Do not connect wiring of different thicknesses to the power terminal block. (Slack in the power wiring may cause abnormal heat.)
- When connecting wiring which is the same thickness, do as shown in the figure below.

- For wiring, use the designated power wire and connect firmly, then secure to prevent outside pressure being exerted on the terminal board.
- Use an appropriate screwdriver for tightening the terminal screws. A screwdriver with a small head will strip the head and make proper tightening impossible.
- Over-tightening the terminal screws may break them.
- See the table below for tightening torque for the terminal screws.

Tightening torque (N•m)	
M8 (Power terminal block)	5.5~7.3
M8 (Ground)	
M3 (Inter-unit wiring terminal block)	0.8~0.97

Recommendations when connecting the ground

When pulling the ground wire out, wire it so that it comes through the cut out section of the cup washer. (An improper ground connection may prevent a good ground from being achieved.) (See figure 13)

8.9. Wiring example for wiring inside unit

See figure 21.

1	Electric wiring
2	Wiring between outdoor unit and control box
3	Clamp to the electric box with field supplied clamps.
4	When routing out the power/ground wires from the right side:
5	When routing the remote control cord and inter-unit wiring, secure clearance of 50 mm or more from the power wiring. Ensure that the power wiring does not contact any heated sections (▨).
6	Clamp to the back of the column support with field supplied clamps.
7	When routing out the inter-unit wirings from the opening for piping:
8	When routing out the power/ground wires from the front:
9	When routing out the ground wires from the left side:
10	Grounding wire
11	When wiring, pay attention not to detach the acoustic insulators from the compressor.
12	Power supply
13	Fuse
14	Earth leakage breaker
15	Ground wire
16	Outdoor unit

9. Pipe insulation

After finishing the leak test and vacuum drying, the piping must be insulated. Take into account the following points:

- Make sure to insulate the connection piping and refrigerant branch kits entirely.
- Be sure to insulate liquid and gas piping (for all units).
- Use heat resistant polyethylene foam which can withstand a temperature of 70°C for liquid side piping and polyethylene foam which can withstand a temperature of 120°C for gas side piping.
- Reinforce the insulation on the refrigerant piping according to the installation environment.

Ambient temperature	Humidity	Minimum thickness
≤ 30°C	75% to 80% RH	15 mm
>30°C	≥ 80 RH	20 mm

  Condensation might form on the surface of the insulation.
- If there is a possibility that condensation on the stop valve might drip down into the air handling unit through gaps in the insulation and piping because the outdoor unit is located higher than the air handling unit this must be prevented by sealing up the connections. See figure 22.

1	Gas line stop valve
2	Liquid line stop valve
3	Service port for adding refrigerant
4	Sealing up treatment
5	Insulation
6	Air handling unit - outdoor interconnection piping

- For cooling only units, insulation which can withstand 70°C is also sufficient for gas side piping.

Be sure to insulate local pipes, as touching them can cause burns.

10. Checking of unit and installation conditions

Be sure to check the following:

The piping work

1. Make sure piping size is correct.
   See "6.2. Selection of piping material" on page 144.
2. Make sure insulation work is done.
   See "9. Pipe insulation" on page 152.
3. Make sure there is no faulty refrigerant piping.
   See "6. Refrigerant piping" on page 144.

The electrical work

1. Make sure there is no faulty power wiring or loose nuts.
   See "8. Field wiring" on page 147.
2. Make sure there is no faulty transmission wiring or loose nuts.
   See "8. Field wiring" on page 147.
3. Make sure the insulation resistance of the main power circuit is not deteriorated.
   Using a megatester for 500 V, check that the insulation resistance of 2 MΩ or more is attained by applying a voltage of 500 V DC between the power terminals and earth. Never use the megatester for the transmission wiring (between outdoor and air handling unit, outdoor and COOL/HEAT selector, etc.).

11. Charging refrigerant

The outdoor unit is factory charged, but depending on the length of the piping when installed, the outdoor unit may require additional charging.

For charging the additional refrigerant follow the procedure as described in this chapter.

Refrigerant can not be charged until all field wiring and field piping has been completed.

Refrigerant may only be charged after performing the leak test and the vacuum drying.

11.1. Important information regarding the refrigerant used

This product contains fluorinated greenhouse gases covered by the Kyoto Protocol. Do not vent gases into the atmosphere.

Refrigerant type: R410A
GWP[1] value: 1975

[1] GWP = global warming potential

Please fill in with indelible ink,

- ① the factory refrigerant charge of the product,
- ② the additional refrigerant amount charged in the field and
- ①+② the total refrigerant charge

on the fluorinated greenhouse gases label supplied with the product.

The filled out label must be adhered on the inside of the product and in the proximity of the product charging port (e.g. on the inside of the service cover).

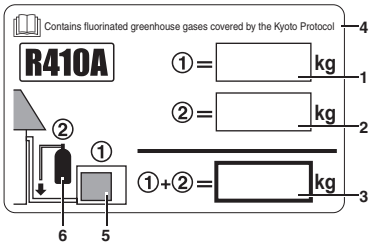

1 factory refrigerant charge of the product: see unit name plate

2 additional refrigerant amount charged in the field

3 total refrigerant charge

4 Contains fluorinated greenhouse gases covered by the Kyoto Protocol

5 outdoor unit

6 refrigerant cylinder and manifold for charging

NOTE

National implementation of EU regulation on certain fluorinated greenhouse gases may require to provide the appropriate official national language on the unit. Therefore, an additional multilingual fluorinated greenhouse gases label is supplied with the unit.

Sticking instructions are illustrated on the backside of that label.

11.2. Precautions when adding R410A

Be sure to charge the specified amount of refrigerant in liquid state to the liquid pipe.

Since this refrigerant is a mixed refrigerant, adding it in gas form may cause the refrigerant composition to change, preventing normal operation.

- Before charging, check whether the refrigerant cylinder is equipped with a siphon tube or not.

Charge the liquid refrigerant with the cylinder in upright position.

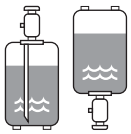

Charge the liquid refrigerant with the cylinder in up-side-down position.

- Be sure to use tools exclusively for R410A to ensure required pressure resistance and to prevent foreign materials from mixing into the system.

Charging with an unsuitable substance may cause explosions and accidents, so always make sure that the appropriate refrigerant (R410A) is charged.

Refrigerant containers must be opened slowly.

11.3. Stop valve operation procedure

- Do not open the stop valve until all piping and electrical steps of "10. Checking of unit and installation conditions" on page 152 are completed. If the stop valve is left open without turning on the power, it may cause refrigerant to build up in the compressor, leading to insulation degradation.
- Always use a charge hose for service port connection.
- After tightening the cap, check that no refrigerant leaks are present.

Size of stop valve

The sizes of the stop valves connected to the system are as listed in the table below.

	ERQ125	ERQ200	ERQ250
Liquid line stop valve	Ø9.5		
Gas line stop valve	Ø15.9	Ø19.1	Ø25.4(*)

(*) The model ERQ250 supports field piping of Ø22.2 on the accessory pipe supplied with the unit.

Opening stop valve (See figure 23)

1 Service port

2 Cap

3 Hexagon hole

4 Shaft

5 Seal

1. Remove the cap and turn the valve counterclockwise with the hexagon wrench.
2. Turn it until the shaft stops.

Do not apply excessive force to the stop valve. Doing so may break the valve body, as the valve is not a backseat type. Always use the special tool.

3. Make sure to tighten the cap securely. Refer to the table below

Stop valve size	Tightening torque N•m (Turn clockwise to close)			
	Shaft		Cap (valve lid)	Service port
	Valve body	Hexagonal wrench		
Ø9.5	5.4~6.6	4 mm	13.5~16.5	11.5~13.9
Ø15.9	13.5~16.5	6 mm	23.0~27.0	
Ø19.1	27.0~33.0	8 mm	22.5~27.5	
Ø25.4				

Closing stop valve (See figure 23)

1. Remove the cap and turn the valve clockwise with the hexagon wrench.
2. Securely tighten the valve until the shaft contacts the main body seal.
3. Make sure to tighten the cap securely.
   For the tightening torque, refer to the table above.

11.4. Additional refrigerant charge

The refrigerant leak detection function can not be used.

Follow the procedures below.

When charging a system, charging over the permissible quantity can cause liquid hammer.

Always use protective gloves and protect your eyes when charging refrigerant.

When the refrigerant charging procedure is done or when pausing, close the valve of the refrigerant tank immediately. If the tank is left with the valve open, the amount of refrigerant which is properly charged may get off point. More refrigerant may be charged by any remaining pressure after the unit has stopped.

Electric shock warning

Close the electric box lid before turning on the main power.

Perform the settings on the circuit board (A1P) of the outdoor unit and check the LED display after the power is on via the service lid which is in the lid of the electric box.

Operate switches with an insulated stick (such as a ball-point pen) to avoid touching the life parts.

Make sure to re-attach the inspection cover into the switch box cover after the job is finished.

Make sure to turn ON the power 6 hours before starting the operation. This is necessary to warm the crankcase by the electric heater.

If operation is performed within 12 minutes after the air handling unit and outdoor units are turned on, the H2P-LED will be lit and the compressor will not operate.

NOTE

See "11.3. Stop valve operation procedure" on page 153 for details on how to handle stop valves.

The refrigerant charging port is connected to the piping inside the unit.
The unit's internal piping is already factory charged with refrigerant, so be careful when connecting the charge hose.

After adding the refrigerant, do not forget to close the lid of the refrigerant charging port.
The tightening torque for the lid is 11.5 to 13.9 N•m.

In order to ensure uniform refrigerant distribution, it may take the compressor ±10 minutes to start up after the unit has started operation. This is not a malfunction.

1 Charge with the outdoor unit at standstill

1. Calculate how much refrigerant to be added using the formula explained in the chapter "4.2 How to calculate the additional refrigerant to be charged" on page 146.
2. Open valve C (valves A and B and the stop valves must be left closed) and charge the required amount of refrigerant through the liquid side stop valve service port.
   - When the required amount of refrigerant is fully charged, close valve C. Record the amount of refrigerant that was added on the additional refrigerant charge label provided with the unit and attach it on the back side of the front panel. Perform the test procedure as described in "Test operation procedure".

2 Normal system display

LED display (Default status before delivery)	Micro-computer operation monitor	Mode	Ready /Error	Cooling/Heating changeover			Low noise	Demand	Multi
				Indi-vidual	Bulk (master)	Bulk (slave)			
	HAP	H1P	H2P	H3P	H4P	H5P	H6P	H7P	H8P
Single outdoor unit system	◑	●	●	☼	●	●	●	●	●

3 Remote control malfunction code display

Remote control heating mode malfunction codes

Error code		
P8 recharge operation	Close valve A immediately and press the TEST OPERATION button once. The operation will restart from the charging mode judgement onwards.	
P2 charge hold	Close valve A immediately. Check following items: - Check if the gas side stop valve is opened correctly - Check if the valve of the refrigerant cylinder is opened - Check if the air inlet and outlet of the air handling unit are not obstructed	After correcting the abnormality, restart the automatic charging procedure again.

Remote control cooling mode malfunction codes

Error code		
PA, PH, PC replace cylinder	Close valve A and replace the empty cylinder. When renewed, open valve A (the outdoor unit will not stop operating). The code on the display shows the unit where a cylinder is to be renewed: PA = master unit, PH = slave unit 1, PC = slave unit 2, flashing PA, PH and PC = all units After recplacing the cylinder, open valve A again and continue the work.	
P8 recharge operation	Close valve A immediately. Restart the automatic charging procedure again.	
P2 charge hold	Close valve A immediately. Check following items: - Check if the gas side stop valve is opened correctly - Check if the valve of the refrigerant cylinder is opened - Check if the air inlet and outlet of the air handling unit are not obstructed - Check if the indoor temperature is not lower than 20°C DB	After correcting the abnormality, restart the automatic charging procedure again.
* abnormal stop	Close valve A immediately. Confirm the malfunction code by the remote control and correct the abnormality by following the "Correcting after abnormal completion of the test operation".	

11.5. Checks after adding refrigerant

Are the stop valves for both liquid and gas open?

Is the amount of refrigerant, that has been added, recorded?

Make sure to open the stop valves after charging the refrigerant.

Operating with the stop valves closed will damage the compressor.

12. Before operation

12.1. Service precautions

WARNING: ELECTRIC SHOCK

Caution when performing service to inverter equipment

1. Do not open the electric box cover for 10 minutes after the power supply is turned off.
2. Measure the voltage between terminals on the terminal block for power supply with a tester and confirm that the power supply is shut off.

   In addition, measure the points, as shown in the figure below, with a tester and confirm that the voltage of the capacitor in the main circuit is less than 50 V DC.

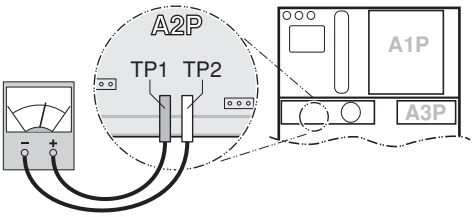

3. To prevent damaging the PC-board, touch a noncoated metal part to eliminate static electricity before pulling out or plugging in connectors.
4. The performing of the service to the inverter equipment must be started after the junction connectors X1A and X2A for the fan motors in the outdoor unit are been pulled out. Be carefull not to touch the live parts.

   (If a fan rotates due to strong wind, it may store electricity in the capacitor or in the main circuit and cause electric shock.)
5. After the service is finished, plug the junction connecter back in. Otherwise the error code E7 will be displayed on the remote control and normal operation will not be performed.

For details refer to the wiring diagram labeled on the back of the electric box cover.

Pay attention to the fan. It is dangerous to inspect the unit while the fan is running. Be sure to turn off the main switch and to remove the fuses from the control circuit located in the outdoor unit.

NOTE

Play it safe!

For protection of the PCB, touch the switch box casing by hand in order to eliminate static electricity from your body before performing service.

12.2. Checks before initial start-up

NOTE

Remark that during the first running period of the unit, required power input may be higher than stated on the nameplate of the unit. This phenomenon originates from the compressor that needs elapse of a 50 hours run in period before reaching smooth operation and stable power consumption.

Make sure that the circuit breaker on the power supply panel of the installation is switched off.

Attach the power wire securely.

Introducing power with a missing N-phase or with a mistaken N-phase will break the equipment.

After the installation, check the following before switching on the circuit breaker:

1. The position of the switches that require an initial setting

   Make sure that switches are set according to your application needs before turning the power supply on.
2. Power supply wiring and transmission wiring

   Use a designated power supply and transmission wiring and make sure that it has been carried out according to the instructions described in this manual, according to the wiring diagrams and according to local and national regulations.
3. Pipe sizes and pipe insulation

   Make sure that correct pipe sizes are installed and that the insulation work is properly executed.
4. Air tight test and vacuum drying

   Make sure the air tight test and vacuum drying were completed.
5. Additional refrigerant charge

   The amount of refrigerant to be added to the unit should be written on the included "Added Refrigerant" plate and attached to the rear side of the front cover.
6. Insulation test of the main power circuit

   Using a megatester for 500 V, check that the insulation resistance of 2 MΩ or more is attained by applying a voltage of 500 V DC between power terminals and earth. Never use the megatester for the transmission wiring.
7. Installation date and field setting

   Be sure to keep record of the installation date on the sticker on the rear of the upper front panel according to EN60335-2-40. and keep record of the contents of the field setting.

12.3. Field setting

If required, carry out field settings according to the following instructions. Refer to the service manual for more details.

Opening the switch box and handling the switches

When carrying out field settings, remove the inspection cover (1).

Operate the switches with an insulated stick (such as a ball-point pen) to avoid touching live parts.

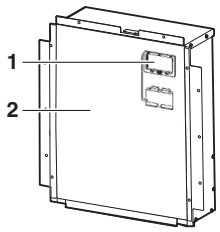

Make sure to re-attach the inspection cover (1) into the switch box cover (2) after the job is finished.

NOTE

Make sure that all outside panels, except for the panel on the electric box, are closed while working.

Close the lid of the electric box firmly before turning on the power.

Location of the dip switches, LEDs and buttons

1 LED H1~8P
2 Push button switches BS1~BS5
3 Dip switch 1 (DS1: 1~4)
4 Dip switch 2 (DS2: 1~4)
5 Dip switch 3 (DS3: 1~2)

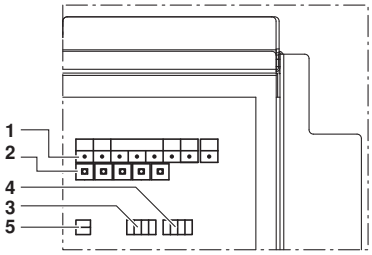

LED state

Throughout the manual the state of the LEDs is indicated as follows:

● OFF

☼ ON

◐ Blinking

Setting the dip switches (only in case of a heat pump unit)

	What to set with dip switch DS1
1	COOL/HEAT selector (refer to "8.7. Field line connection: cool/heat selection" on page 150) (**OFF** = not installed = factory setting)
2~4	NOT USED DO NOT CHANGE THE FACTORY SETTING.
	What to set with dip switch DS2
1~4	NOT USED DO NOT CHANGE THE FACTORY SETTING.
	What to set with dip switch DS3
1+2	NOT USED DO NOT CHANGE THE FACTORY SETTING.

Setting the push button switch (BS1~5)

Function of the push button switch which is located on the outdoor unit PCB (A1P):

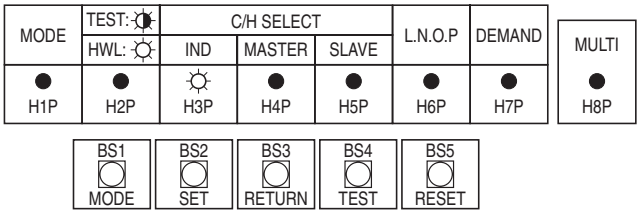

BS1 MODE	For changing the set mode
BS2 SET	For field setting
BS3 RETURN	For field setting
BS4 TEST	For test operation
BS5 RESET	For resetting the address when the wiring is changed

The figure shows state of the LED indications when the unit is shipped from the factory.

Check operation procedure

1 Turn the power on for the outdoor unit, the control box and air handling unit.

Be sure to turn the power on at least 6 hours before operation inorder to have power running to the crank case heater.

2 Make sure that transmission is normal by checking the LED display on the outdoor unit circuit board (A1P). (If transmission is normal, each LED will be displayed as shown below.)

LED display (Default status before delivery)	Micro-computer operation monitor	Mode	Ready /Error	Cooling/Heating changeover			Low noise	Demand	Multi
				Indivi-dual	Bulk (master)	Bulk (slave)			
	HAP	H1P	H2P	H3P	H4P	H5P	H6P	H7P	H8P
Single outdoor unit system	◐	●	●	☼	●	●	●	●	●

Setting the mode

The set mode can be changed with the **BS1 MODE** button according to the following procedure:

For setting mode 1: Press the **BS1 MODE** button once, the H1P LED is off ●.

For setting mode 2: Press the **BS1 MODE** button for 5 seconds, the H1P LED is on ☼.

If the H1P LED is blinking ◐ and the **BS1 MODE** button is pushed once, the setting mode will change to setting mode 1.

NOTE If you get confused in the middle of the setting process, push the **BS1 MODE** button. Then it returns to setting mode 1 (H1P LED is off).

Setting mode 1

(not in case of cooling only unit)

The H1P LED is off (COOL/HEAT selection setting).

Setting procedure

1 Push the **BS2 SET** button and adjust the LED indication to either one of the possible settings as shown below in the field marked ▭:

1 In case of COOL/HEAT setting by each individual outdoor unit circuit.

	H1P	H2P	H3P	H4P	H5P	H6P	H7P
1	●	●	◐	●	●	●	●

2 Push the **BS3 RETURN** button and the setting is defined.

Setting mode 2

The H1P LED is on.

Setting procedure

1 Push the **BS2 SET** button according to the required function (A~H). The LED indication that matches the required function is shown below in the field marked ▭:

Possible functions

- **A** additional refrigerant charging operation (not applicable).
- **B** refrigerant recovery operation/vacuuming operation.
- **C** setting of high static pressure.
- **D** automatic low noise operation setting at nighttime.
- **E** low noise operation level setting (**L.N.O.P**) via the external control adapter.
- **F** power consumption limitation setting (**DEMAND**) via the external control adapter.
- **G** enabling function of the low noise operation level setting (**L.N.O.P**) and/or power consumption limitation setting (**DEMAND**) via the external control adapter (DTA104A61/62).
- **H** check operation (without initial refrigerant decision)

	H1P	H2P	H3P	H4P	H5P	H6P	H7P
A	☼	●	☼	●	☼	●	●
B	☼	●	☼	●	☼	●	☼
C	☼	●	☼	●	●	☼	●
D	☼	●	☼	●	☼	☼	●
E	☼	●	☼	☼	●	●	☼
F	☼	●	☼	☼	☼	☼	●
G	☼	●	●	☼	☼	●	●
H	☼	●	●	●	●	☼	☼

2 When the **BS3 RETURN** button is pushed, the current setting is defined.

3 Push the **BS2 SET** button according to the required setting possibility as shown below in the field marked ▭.

3.1 Possible settings for function A, B, C, G and H are **ON** (ON) or **OFF** (OFF).

	H1P	H2P	H3P	H4P	H5P	H6P	H7P
ON	☼	●	●	●	●	◐	●
OFF (*)	☼	●	●	●	●	●	◐

(*) This setting = factory setting

3.2 Possible settings for function D

The noise of level 3 < level 2 < level 1 (◢ **1**).

	H1P	H2P	H3P	H4P	H5P	H6P	H7P
OFF (*)	☼	●	●	●	●	●	●
◢ 1	☼	●	●	●	●	●	◐
◢ 2	☼	●	●	●	●	◐	●
◢ 3	☼	●	●	●	●	◐	◐

(*) This setting = factory setting

3.3 Possible settings for function E and F

For function E (**L.N.O.P**) only: the noise of level 3 < level 2 < level 1 (◢ **1**).

For function F (**DEMAND**) only: the power consumption of level 1< level 2 < level 3 (◢ **3**).

	H1P	H2P	H3P	H4P	H5P	H6P	H7P
◢ 1	☼	●	●	●	●	●	◐
◢ 2 (*)	☼	●	●	●	●	◐	●
◢ 3	☼	●	●	●	◐	●	●

(*) This setting = factory setting

4 Push the **BS3 RETURN** button and the setting is defined.

5 When the **BS3 RETURN** button is pushed again, the operation starts according to the setting.

Refer to the service manual for more details and for other settings.

Confirmation of the set mode

The following items can be confirmed by setting mode 1 (H1P LED is off)

Check the LED indication in the field marked ▭.

1 Indication of the present operation state

- ●, normal
- ☼, abnormal
- ◐, under preparation or under test operation

H1P	H2P	H3P	H4P	H5P	H6P	H7P
●	●	☼	●	●	●	●

2 Indication of COOL/HEAT selection setting

1 When set to COOL/HEAT change-over by each individual outdoor unit circuit (= factory setting).

	H1P	H2P	H3P	H4P	H5P	H6P	H7P
1(*)	●	●	☼	●	●	●	●

(*) This setting = factory setting.

3 Indication of low noise operation state **L.N.O.P**

- ● standard operation (= factory setting)
- ☼ **L.N.O.P** operation

H1P	H2P	H3P	H4P	H5P	H6P	H7P
●	●	☼	●	●	●	●

4 Indication of power consumption limitation setting **DEMAND**

- ● standard operation (= factory setting)
- ☼ **DEMAND** operation

H1P	H2P	H3P	H4P	H5P	H6P	H7P
●	●	☼	●	●	●	●

12.4. Test operation

Do not insert fingers, rods or other objects into the air inlet or outlet. When the fan is rotating at high speed, it will cause injury.

Do not perform the test operation while working on the air handling units.

When performing the test operation, not only the outdoor unit, but the connected air handling unit will operate as well. Working on a air handling unit while performing a test operation is dangerous.

In the check operation, the following checks and judgement will be performed:

Check of the stop valve opening

Check for wrong wiring

Judgement of piping length

It takes ±30 minutes to complete the check operation.

Check operation procedure

1 Close the electric box lid and all front panels except the one on the side of the electric box.

2 Turn on the power to the outdoor unit, control box and air handling units. Be sure to turn the power ON at least 6 hours before operation in order to have power running to the crank case heater.

3 Make the field setting as needed using the push buttons on the PCB (A1P) of the outdoor unit. Refer to "12.3. Field setting" on page 155.

4 Set the check operation (without initial refrigerant decision) following setting mode 2 in the field setting and perform the check operation.

The system operates for ±30 minutes and automatically stops the check operation.

If no malfunction code is displayed on the remote control after the system has stopped, check if the operation is completed. Normal operation will be possible after 5 minutes.

If a malfunction code is displayed on the remote control, correct the malfunction and perform the check operation again as decribed in "Correcting after abnormal completion of the test operation" on page 156

Test operation procedure

1 Close all front panels except the front panel of the electric box.

2 Turn ON the power to all outdoor units and the connected air handling units.

Be sure to turn on the power 6 hours before operation in order to have power running to the crank case heater and to protect the compressor.

3 Make the field setting as described in the paragraph "12.3. Field setting" on page 155.

4 Press the **BS1 MODE** button once, and set to the SETTING MODE (H1P LED = OFF).

5 Press and hold the **BS4 TEST** button down for 5 seconds or more. The unit will start the test operation.

The test operation is automatically carried out in cooling mode, the H2P LED will light up and the messages "Test operation" and "Under centralized control" will display on the remote control.

It may take 10 minutes to bring the state of the refrigerant uniform before the compressor starts.

During the test operation, the refrigerant running sound or the magnetic sound of a solenoid valve may become loud and the LED display may change, but these are not malfunctions.

During the test operation, it is not possible to stop the unit operation from a remote control. To abort the operation, press the **BS3 RETURN** button. The unit will stop after ±30 seconds.

6 Close the front panel in order to let it not be the cause of misjudgement.

7 Check the test operation results by the LED display on the outdoor unit.

	H1P	H2P	H3P	H4P	H5P	H6P	H7P
Normal completion	●	●	☼	●	●	●	●
Abnormal completion	●	☼	☼	●	●	●	●

8 When the test operation is fully completed, normal operation will be possible after 5 minutes.

Otherwise, refer to " Correcting after abnormal completion of the test operation" on page 158 to take actions for correcting the abnormality.

Correcting after abnormal completion of the test operation

The test operation is only completed if there is no malfunction code displayed on the remote control. In case of a displayed malfunction code, perform the following actions to correct the abnormality:

Confirm the malfunction code on the remote control

Installation error	Error code	Remedial action
The stop valve of an outdoor unit is left closed.	E3 E4 F3 UF	Check referring to the table in "11.4. Additional refrigerant charge" on page 152
The phases of the power to the outdoor units are reversed.	U1	Exchange two of the three phases (L1, L2, L3) to make a positive phase connection.
No power is supplied to an outdoor unit, control box or air handling unit (including phase interruption).	U1 U4	Check if the power wiring for the outdoor units are connected correctly. (If the power wire is not connected to L2 phase, no malfunction display will appear and the compressor will not work.)
Incorrect interconnections between units	UF	Check if the refrigerant line piping and the unit wiring are consistent with each other.
Refrigerant overcharge	E3 F6 UF	Recalculate the required amount of refrigerant from the piping length and correct the refrigerant charge level by recovering any excessive refrigerant with a refrigerant recovery machine.
Insufficient refrigerant	E4 F3	Check if the additional refrigerant charge has been finished correctly. Recalculate the required amount of refrigerant from the piping length and add an adequate amount of refrigerant.

After correcting the abnormality, press the **BS3 RETURN** button and reset the malfunction code.

Carry out the test operation again and confirm that the abnormality is properly corrected.

13. SERVICE MODE OPERATION

Vacuuming method

At the first installation, this vacuuming is not required. It is required only for repair purposes.

1 When the unit is at standstill and under the setting mode 2, set the required function B (refrigerant recovery operation/ vacuuming operation) to **ON** (ON).
- After this is set, do not reset the setting mode 2 until the vacuuming is finished.
- The H1P LED is on and the remote control indicates **TEST** (test operation) and (external control) and the operation will be prohibited.

2 Evacuate the system with a vacuum pump.

3 Press the **BS1 MODE** button and reset the setting mode 2.

Refrigerant recovery operation method

by a refrigerant reclaimer

1 When the unit is at standstill and under the setting mode 2, set the required function B (refrigerant recovery operation/ vacuuming operation) to **ON** (ON).
- The air handling unit and the outdoor unit expansion valves will fully open and some solenoid valves will be turned on.
- The H1P LED is on and the remote control indicates **TEST** (test operation) and (external control) and the operation will be prohibited.

2 Cut off the power supply to the control box, air handling unit and the outdoor unit with the circuit breaker. After the power supply to one side is cut off, cut off the power supply to the other side within 10 minutes. Otherwise, the communication between the air handling and outdoor unit may become abnormal and the expansion valves will be completely closed again.

3 Recover the refrigerant by a refrigerant reclaimer. For details, see the operation manual delivered with the refrigerant reclaimer.

14. Caution for refrigerant leaks

Introduction

The installer and system specialist shall secure safety against leakage according to local regulations or standards. The following standards may be applicable if local regulations are not available.

This system uses R410A as refrigerant. R410A itself is an entirely safe non-toxic, non-combustible refrigerant. Nevertheless care must be taken to ensure that air conditioning facilities are installed in a room which is sufficiently large. This assures that the maximum concentration level of refrigerant gas is not exceeded, in the unlikely event of major leak in the system and this in accordance to the local applicable regulations and standards.

Maximum concentration level

The maximum charge of refrigerant and the calculation of the maximum concentration of refrigerant is directly related to the humanly occupied space in to which it could leak.

The unit of measurement of the concentration is kg/m^3 (the weight in kg of the refrigerant gas in 1 m^3 volume of the occupied space).

Compliance to the local applicable regulations and standards for the maximum allowable concentration level is required.

According to the appropriate European Standard, the maximum allowed concentration level of refrigerant to a humanly space for R410A is limited to 0.44 kg/m^3.

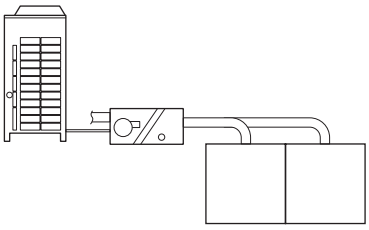

Pay special attention to places, such as a basements, etc. where refrigerant can stay, since refrigerant is heavier than air.

Procedure for checking maximum concentration

Check the maximum concentration level in accordance with steps 1 to 4 below and take whatever action is necessary to comply.

1 Calculate the amount of refrigerant (kg) charged to each system separately.

amount of refrigerant in a single unit system (amount of refrigerant with which the system is charged before leaving the factory) + additional charging amount (amount of refrigerant added locally in accordance with the length or diameter of the refrigerant piping) = total amount of refrigerant (kg) in the system

NOTE Where a single refrigerant facility is divided into 2 entirely independent refrigerant systems, use the amount of refrigerant with which each separate system is charged.

2 Calculate the smallest room volume (m^3)

In a case such as the following, calculate the volume of (A), (B) as a single room or as the smallest room.

A. Where there are no smaller room divisions

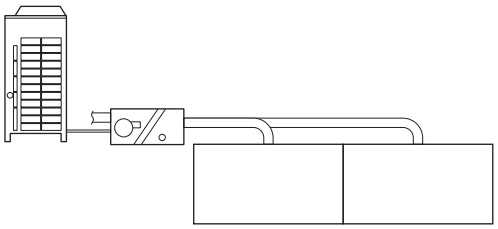

B. Where there is a room division but there is an opening between the rooms sufficiently large to permit a free flow of air back and forth.

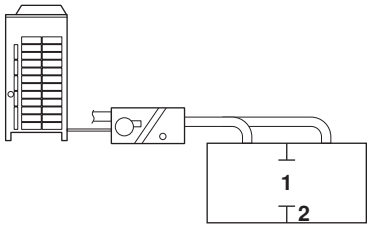

1 opening between rooms

2 partition
(Where there is an opening without a door or where there are openings above and below the door which are each equivalent in size to 0.15% or more of the floor area.)

3 Calculating the refrigerant density using the results of the calculations in steps 1 and 2 above.

$$\frac{\text{total volume of refrigerant in the refrigerant system}}{\text{size (m}^3\text{) of smallest room in which there is an air handling unit installed}} \leq \text{maximum concentration level (kg/m}^3\text{)}$$

If the result of the above calculation exceeds the maximum concentration level then make similar calculations for the second then third smallest room and so until the result falls short of the maximum concentration.

4 Dealing with the situations where the result exceeds the maximum concentration level.

Where the installation of a facility results in a concentration in excess of the maximum concentration level then it will be necessary to revise the system.
Please consult your supplier.

15. Disposal requirements

Dismantling of the unit, treatment of the refrigerant, of oil and of other parts must be done in accordance with relevant local and national legislation.

OPERATION MANUAL

Inverter condensing unit

Operation manual Inverter condensing unit	**English**
Bedienungsanleitung Invertierer Verflüssiger	**Deutsch**
Manuel d'utilisation Groupe condenseur à inverter	**Français**
Gebruiksaanwijzing Condensorunit met inverter	**Nederlands**
Manual de operación Unidad condensadora Inverter	**Español**
Manuale d'uso Unità di condensazione a inverter	**Italiano**
Manual de operações Unidade de condensação com inversor	**Portugues**
Инструкция по эксплуатации Инверторный конденсаторный агрегат	***русский***
Instrukcja obs³ugi Skraplacz typu Inverter	**polski**

ERQ100A7V1B
ERQ125A7V1B
ERQ140A7V1B

ERQ125A7W1B
ERQ200A7W1B
ERQ250A7W1B

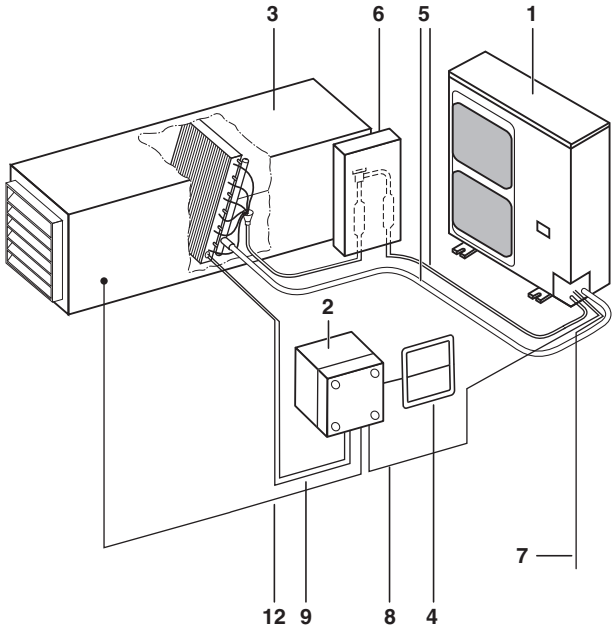

1

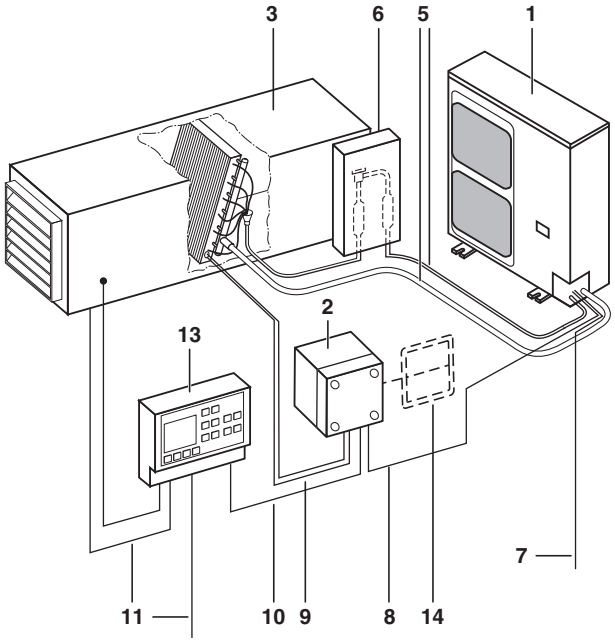

2

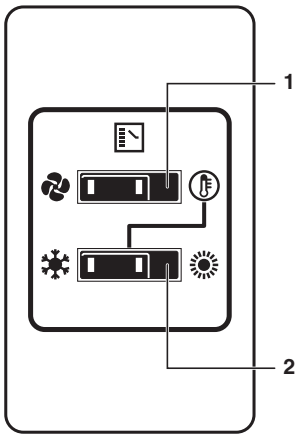

3

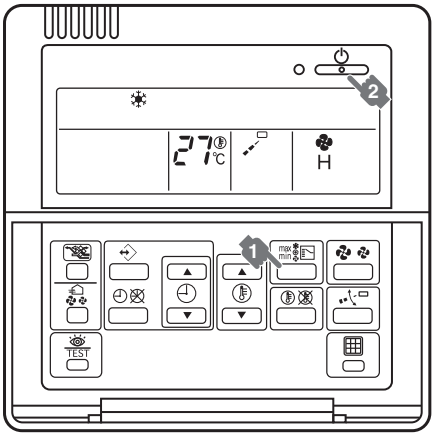

4

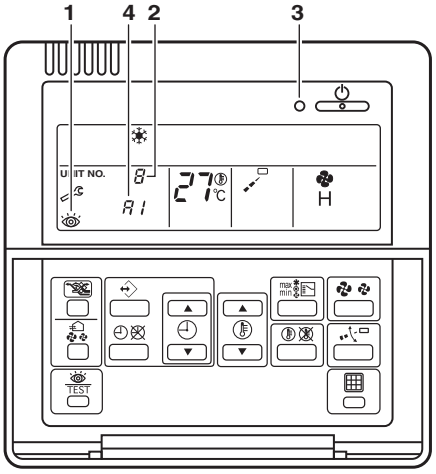

5

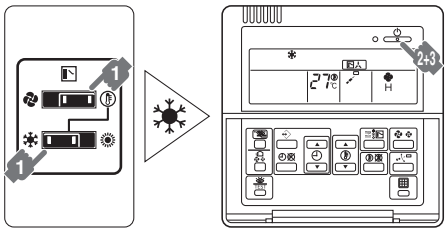

6

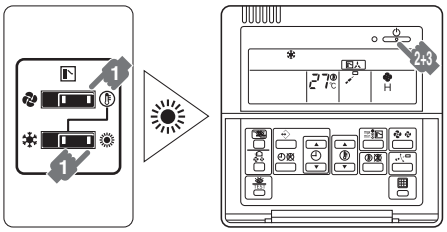

7

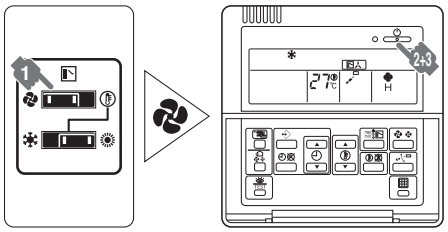

8

NOTES

CONTENTS

Page

1. Safety cautions 162
2. Important information regarding the refrigerant used 163
3. What to do before operation 163
4. Remote control 164
5. Changeover switch: Name and function of each switch 164
6. Operation range 164
7. Operation procedure 164
7.1. Cooling, heating, and fan only operation 164
8. Energy saving and optimum operation 165
9. Maintenance 165
9.1. Maintenance after a long stop period 165
9.2. Maintenance before a long stop period 165
10. Following symptoms are not air conditioner troubles 165
11. Troubleshooting 166
12. After-sales service and warranty 167
12.1. After-sales service 167
12.2. Shortening of "maintenance cycle" and "replacement cycle" needs to be considered in following situations 167

Thank you for purchasing this Daikin air conditioner. Carefully read this operation manual before using the air conditioner. It will tell you how to use the unit properly and help you if any trouble occurs. After reading the manual, file it away for future reference.

The English text is the original instruction. Other languages are translations of the original instructions.

1. SAFETY CAUTIONS

Read the following cautions carefully and use your equipment properly.

WARNING

Improper handling can lead to such serious consequences as death, severe injury or damage to the equipment.

NOTE

These instructions will ensure proper use of the equipment.

Be sure to follow these important safety cautions.

Keep these warning sheets handy so that you can refer to them if needed.

Also, if this equipment is transferred to a new user, make sure to hand over this user's manual to the new user.

Warnings

- It is not good for your health to expose your body to the air flow for a long time.
- In order to avoid electric shock, fire or injury, or if you detect any abnormality such as smell of fire, turn off the power supply and call your dealer for instructions.
- Ask your dealer for installation of the air conditioner.
  Incomplete installation performed by yourself may result in a water leakage, electric shock, and fire.
- Do not place objects in direct proximity of the outdoor unit and do not let leaves and other debris accumulate around the unit.
  Leaves are a hotbed for small animals which can enter the unit. Once in the unit, such animals can cause malfunctions, smoke or fire when making contact with electrical parts.
- Ask your dealer for improvement, repair, and maintenance.
  Incomplete improvement, repair, and maintenance may result in a water leakage, electric shock and fire.
- Do not insert fingers, rods or other objects into the air inlet or outlet. When the fan is rotating at high speed, it will cause injury.
- Never let the air handling unit or the remote control get wet.
  It may cause an electric shock or a fire.
- Never use a flammable spray such as hair spray, lacquer or paint near the unit.
  It may cause a fire.
- Never replace a fuse with that of wrong ampere ratings or other wires when a fuse blows out.
  Use of wire or copper wire may cause the unit to break down or cause a fire.
- Never put any objects into the air inlet or outlet.
  Objects touching the fan at high operating speed can be dangerous.
- Never press the button of the remote control with a hard, pointed object.
  The remote control may be damaged.
- Never pull or twist the electric wire of the remote control.
  It may cause the unit to malfunction.
- Never inspect or service the unit by yourself.
  Ask a qualified service person to perform this work.
- To prevent refrigerant leak, contact your dealer.
  When the system is installed and runs in a small room, it is required to keep the concentration of the refrigerant, if by any chance coming out, below the limit. Otherwise, oxygen in the room may be affected, resulting in a serious accident.
- The refrigerant in the air conditioner is safe and normally does not leak. If the refrigerant leaks in the room, contact with a fire of a burner, a heater or a cooker may result in a harmful gas.
  Turn off any combustible heating devices, ventilate the room and contact the dealer where you purchased the unit.
  Do not use the air conditioner until a service person confirms that the portion where the refrigerant leaks is repaired.
- Improper installation or attachment of equipment or accessories could result in electric shock, short-circuit, leaks, fire or other damage to the equipment. Be sure to use only accessories made by Daikin which are specifically designed for use with the equipment and have them installed by a professional.
- Ask your dealer to move and reinstall the air conditioner.
  Incomplete installation may result in a water leakage, electric shock, and fire.

Cautions

- Do not use the air conditioner for other purposes.
  In order to avoid any quality deterioration, do not use the unit for cooling precision instruments, food, plants, animals or works of art.
- In order to avoid injury, do not remove the fan guard of the outdoor unit.
- To avoid oxygen deficiency, ventilate the room sufficiently if equipment with burner is used together with the air conditioner.
- After a long use, check the unit stand and fitting for damage.
  If damaged, the unit may fall and result in injury.
- Do not place a flammable spray bottle near the air conditioner and do not use sprays.
  Doing so may result in a fire.
- Before cleaning, be sure to stop the operation, turn the breaker off or pull out the supply cord.
  Otherwise, an electric shock and injury may result.
- Do not operate the air conditioner with a wet hand.
  An electric shock may result.
- Do not place items which might be damaged by moisture under the air handling unit.
  Condensation may form if the humidity is above 80%, if the drain outlet is blocked or the filter is polluted.
- Do not place appliances which produce open fire in places exposed to the air flow from the unit or under the air handling unit. It may cause incomplete combustion or deformation of the unit due to the heat.
- Do not allow anyone to mount on the outdoor unit or avoid placing any object on it.
  Falling or tumbling may result in injury.
- Never expose little children, plants or animals directly to the air flow.
  Adverse influence to little children, animals and plants may result.
- Do not wash the air conditioner with water.
  Electric shock or fire may result.
- Do not install the air conditioner at any place where flammable gas may leak out.
  If the gas leaks out and stays around the air conditioner, a fire may break out.
- In order to avoid electric shock or fire, make sure that an earth leak detector is installed.
- Be sure the air conditioner is electrically earthed.
  In order to avoid electric shock, make sure that the unit is grounded and that the earth wire is not connected to gas or water pipe, lightning conductor or telephone earth wire.
- Arrange the drain hose to ensure smooth drainage. Incomplete drainage may cause wetting of the building, furniture etc.
- Do not let children play on and around the outdoor unit.
  If they touch the unit carelessly, it may result in injury.
- Do not place a flower vase or anything containing water on the unit.
  Water may enter the unit, causing an electric shock or fire.
- Do not place the controller exposed to direct sunlight.
  The LCD display may get discolored, failing to display the data.
- Do not wipe the controller operation panel with benzine, thinner, chemical dustcloth, etc.
  The panel may get discolored or the coating peeled off. If it is heavily dirty, soak a cloth in water-diluted neutral detergent, squeeze it well and wipe the panel clean. Wipe it with another dry cloth.
- Never touch the internal parts of the controller.
  Do not remove the front panel. Some parts inside are dangerous to touch and a machine trouble may happen. For checking and adjusting the internal parts, contact your dealer.
- Avoid placing the controller in a spot splashed with water.
  Water coming inside the machine may cause an electric leak or may damage the internal electronic parts.
- Do not operate the air conditioner when using a room fumigation - type insecticide.
  Failure to observe could cause the chemicals to become deposited in the unit, which could endanger the health of those who are hypersensitive to chemicals.
- Do not touch the heat exchanger fins.
  These fins are sharp and could result in cutting injuries.
- This appliance is not intended for use by persons, including children, with reduced physical, sensory or mental capabilities, or lack of experience and knowledge, unless they have been given supervision or instruction concerning use of the appliance by a person responsible for their safety.
  Children should be supervised to ensure that they do not play with the appliance.

2. Important information regarding the refrigerant used

This product contains fluorinated greenhouse gases covered by the Kyoto Protocol.

Refrigerant type: R410A
GWP[1] value: 1975

[1] GWP = global warming potential

Periodical inspections for refrigerant leaks may be required depending on European or local legislation. Please contact your local dealer for more information.

3. What to do before operation

This operation manual is for the following systems with standard control. Before initiating operation, contact your dealer for the operation that corresponds to your system type and mark.

If your installation has a customized control system, ask your dealer for the operation that corresponds to your system.

	Cool/heat changeover remote control switch		Operation modes
Heat pumps **ERQ_V1** series	❑ yes	❑ no	❄ ☀ ✤
Heat pumps **ERQ_W1** series	❑ yes	❑ no	❄ ☀ ✤

Example of installation

Names and functions of parts, figure 1 shows the standard control system, figure 2 shows the customized control system.

Parts and components

1	Outdoor unit
2	Control box
3	Air handling unit (field supply)
4	Remote control (standard)
5	Field piping (field supply)
6	Expansion valve kit

Wiring connections

7	Outdoor unit power supply
8	Control box wiring (Power supply and communication between control box and outdoor unit)
9	Air handling unit thermistors
10	Communication between controller and control box
11	Power supply and control wiring for air handling unit and controller (power supply is separate from the outdoor unit)
12	Air thermistor control for air handling unit
13	Controller (field supply)
14	Remote control (optional, for service only)

For more details, refer to the manual of the control box.

4. Remote control

Refer to the operation manual of the remote control.

5. Changeover switch: Name and function of each switch (See figure 3)

1 FAN ONLY/AIR CONDITIONING SELECTOR SWITCH

Set the switch to for fan only operation or to for heating or cooling operation.

2 COOL/HEAT CHANGEOVER SWITCH

Set the switch to for cooling or to for heating operation.

6. Operation range

Operation range

Use the system in the following temperature and humidity ranges for safe and effective operation.

	ERQ125~250_W1		ERQ100~140_V1	
Outdoor temperature	–5~43°C DB	–20~21°C DB –20~15.5°C WB	–5~46°C DB	–20~24°C DB(*) –20~15.5°C WB
Indoor temperature	21~32°C DB 14~25°C WB	15~27°C DB	21~32°C DB 14~25°C WB	15~27°C DB
Indoor humidity	≤ 80%(†)		≤ 80%(†)	

(*) Range for operation: –20~–15°C WB. Range for continuous operation: –15~15.5°C WB.

(†) to avoid condensation and water dripping out the unit.
If the temperature or the humidity is beyond these conditions, safety devices may work and the air conditioner may not operate.

7. Operation procedure

- Operation procedure varies according to the combination of outdoor unit and remote control. Read "3. What to do before operation" on page 163.
- To protect the unit, turn on the main power switch 6 hours before operation.
- If the main power supply is turned off during operation, operation will restart automatically after the power turns back on again.
- Refer to the manual supplied with the control box for operation and functionality.
- Refer to the manual supplied with the remote control for operation and functionality.

7.1. Cooling, heating, and fan only operation (See figure 4 and figure 6)

The fan may keep on running for a while after the heating operation stops.

For systems with Daikin remote control and without cool/heat changeover remote control switch (See figure 4)

1 Press the operation mode selector button several times and select the operation mode of your choice.

- Cooling operation
- Heating operation
- Fan only operation

2 Press the on/off button.

The operation lamp lights up and the system starts operation.

For systems with cool/heat changeover remote control switch

1 Select operation mode with the cool/heat changeover remote control switch as follows:

- Cooling operation (figure 6)
- Heating operation (figure 7)
- Fan only operation (figure 8)

2 Press the on/off button or close T1/T2.

The operation lamp lights up and the system starts operation.

For systems without Daikin remote control, without cool/heat changeover remote control swith and with a field supplied controller

1 Select operation mode with the field supplied controller.

2 Close T1/T2.

The operation lamp lights up and the system starts operation.

Adjustment

For programming temperature refer to the operation manual of the remote control.

Stopping the system

3 Press the on/off button once again or open T1/T2.

The operation lamp goes off and the system stops operation.

NOTE Do not turn off power immediately after the unit stops, but wait for at least 5 minutes.

Explanation of heating operation

It may take longer to reach the set temperature for general heating operation than for cooling operation.

The following operation is performed in order to prevent the heating capacity from dropping or cold air from blowing.

Defrost operation

- In heating operation, freezing of the outdoor unit coil increases. Heating capability decreases and the system goes into defrost operation.
- The air handling unit fan stops and the remote control displays .
- In case no remote control is installed, a defrost signal is outputted from the control box.
- After maximum 10 minutes of defrost operation, the system returns to heating operation again.

Hot start

In order to prevent cold air from blowing out of an air handling unit at the start of heating operation, the air handling unit fan can be stopped, depending on the control of the air handling unit.

In case a remote control is installed, the remote control displays . It may take some time before the fan starts. This is not a malfunction.

NOTE

- The heating capacity drops when the outside temperature falls. If this happens, use another heating device together with the unit. (When using together with appliances that produce open fire, ventilate the room constantly.)
  Do not place appliances that produce open fire in places exposed to the air flow from the unit or under the unit.
- It takes some time to heat up the room from the time the unit is started since the unit uses a hot-air circulating system to heat the entire room.
- If the hot air rises to the ceiling, leaving the area above the floor cold, we recommend that you use the circulator (the indoor fan for circulating air). Contact your dealer for details.

8. Energy saving and optimum operation

Observe the following precautions to ensure the system operates properly.

- Adjust the air outlet properly and avoid direct air flow to room inhabitants.
- Adjust the room temperature properly for a comfortable environment. Avoid excessive heating or cooling.
- Prevent direct sunlight from entering a room during cooling operation by using curtains or blinds.
- Ventilate often.
  Extended use requires special attention to ventilation.
- Keep doors and windows closed. If the doors and windows remain open, air will flow out of your room causing a decrease in the cooling or heating effect.
- Be careful not to cool or heat too much. To save energy, keep the temperature setting at a moderate level.

Recommended temperature setting	
For cooling	26~28°C
For heating	20~24°C

- Never place objects near the air inlet or the air outlet of the unit. It may cause deterioration in the effect or stop the operation.
- Turn off the main power supply switch to the unit when the unit is not used for longer periods of time. If the switch is on, it uses electricity. Before restarting the unit, turn on the main power supply switch 6 hours before operation to ensure smooth running. (Refer to "Maintenance" in the air handling unit manual.)
- Keep the air handling unit and remote control at least 1 m away from televisions, radios, stereos, and other similar equipment. Failing to do so may cause static or distorted pictures.
- Do not place items under the air handling unit which may be damaged by water.
  Condensation may form if the humidity is above 80% or if the drain outlet gets blocked.

9. Maintenance

Pay attention to the fan.

It is dangerous to inspect the unit while the fan is running. Be sure to turn off the main switch and to remove the fuses from the control circuit located in the outdoor unit.

9.1. Maintenance after a long stop period (e.g. at the beginning of the season)

- Check and remove everything that might be blocking inlet and outlet vents of air handling units and outdoor units.
- Clean air filters and casings of air handling units. Refer to the operation manual supplied with the air handling units for details on how to proceed and make sure to install cleaned air filters back in the same position.
- Turn on the power at least 6 hours before operating the unit in order to ensure smoother operation. As soon as the power is turned on, the remote control displays appear.

9.2. Maintenance before a long stop period (e.g. at the end of the season)

- Let the air handling units run in fan only operation for about half a day in order to dry the interior of the units. Refer to "7.1. Cooling, heating, and fan only operation" on page 164 for details on fan only operation.
- Turn off the power. The remote control displays disappear.
- Clean air filters and casings of air handling units. Refer to the operation manual supplied with the air handling units for details on how to proceed and make sure to install cleaned air filters back in the same position.

10. Following symptoms are not air conditioner troubles

Symptom 1: The system does not operate

- The air conditioner does not start immediately after the ON/OFF button on the remote control is pushed or T1/T2 is closed.
  If the operation lamp lights, the system is in normal condition.
  To prevent overloading of the compressor motor, the air conditioner starts 5 minutes after it is turned ON again in case it was turned OFF just before. The same starting delay occurs after the operation mode selector button was used.
- If "Centralized Control" is displayed on the remote control and pressing the operation button causes the display to blink for a few seconds.
  This indicates that the central device is controlling the unit.
  The blinking display indicates that the remote control cannot be used.
- The system does not start immediately after the power supply is turned on.
  Wait one minute until the micro computer is prepared for operation.

Symptom 2: Cool/Heat cannot be changed over

- When the display shows "" (change-over under centralized control), it shows that this is a slave remote control.
- When the cool/heat changeover remote control switch is installed and the display shows "".
  This is because cool/heat changeover is controlled by the cool/heat changeover remote control switch. Ask your dealer where the remote control switch is installed.

Symptom 3: Fan operation is possible, but cooling and heating do not work.

- Immediately after the power is turned on.
  The micro computer is getting ready to operate. Wait 10 minutes.

Symptom 4: White mist comes out of a unit

Symptom 4.1: Air handling unit

- When humidity is high during cooling operation
  If the interior of an air handling unit is extremely contaminated, the temperature distribution inside a room becomes uneven. It is necessary to clean the interior of the air handling unit. Ask your dealer for details on cleaning the unit. This operation requires a qualified service person.
- Immediately after the cooling operation stops and if the room temperature and humidity are low.
  This is because warm refrigerant gas flows back into the air handling unit and generates steam.

Symptom 4.2: Air handling unit, outdoor unit

- When the system is changed over to heating operation after defrost operation
  Moisture generated by defrost becomes steam and is exhausted.

Symptom 5: The remote control display reads "U4" or "U5" and stops, but then restarts after a few minutes

- This is because the remote control is intercepting noise from electric appliances other than the air conditioner. This prevents communication between the units, causing them to stop.
  Operation automatically restarts when the noise ceases.

Symptom 6: Noise of air conditioners

Symptom 6.1: Air handling unit, outdoor unit

- A continuous low hissing sound is heard when the system is in cooling or defrost operation.
  This is the sound of refrigerant gas flowing through both indoor and outdoor units.
- A hissing sound which is heard at the start or immediately after stopping operation or defrost operation.
  This is the noise of refrigerant caused by flow stop or flow change.

Symptom 6.2: Outdoor unit

- When the tone of operating noise changes.
  This noise is caused by the change of frequency.

Symptom 7: Dust comes out of the unit

- When the unit is used for the first time in a long time.
  This is because dust has gotten into the unit.

Symptom 8: The units can give off odours

- The unit can absorb the smell of rooms, furniture, cigarettes, etc., and then emit it again.

Symptom 9: The outdoor unit fan does not spin.

- During operation.
  The speed of the fan is controlled in order to optimize product operation.

Symptom 10: The display shows "88" . (Only when a remote control is connected)

- This is the case immediately after the main power supply switch is turned on and means that the remote control is in normal condition. This continues for one minute.

Symptom 11: The compressor in the outdoor unit does not stop after a short heating operation

- This is to prevent oil and refrigerant from remaining in the compressor. The unit will stop after 5 to 10 minutes.

Symptom 12: The inside of an outdoor unit is warm even when the unit has stopped

- This is because the crankcase heater is warming the compressor so that the compressor can start smoothly.

11. TROUBLESHOOTING

If one of the following malfunctions occur, take the measures shown below and contact your dealer.

WARNING

Stop operation and shut off the power if anything unusual occurs (burning smells, etc.)

Leaving the unit running under such circumstances may cause breakage, electric shock or fire.

Contact your dealer.

The system must be repaired by a qualified service person.

- If a safety device such as a fuse, a breaker or an earth leakage breaker frequently actuates or the ON/OFF switch does not properly work.
  Measure: Turn off the main power switch.
- If water leaks from the unit
  Measure: Stop the operation.
- The operation switch does not work well.
  Measure: Turn off the power.
- If the display TEST , the unit number and the operation lamp flash and the malfunction code appears. (Only when a remote control is connected) (See figure 5)

  1 Inspection display
  2 Air handling unit number in which a malfunction occurs
  3 Operation lamp
  4 Malfunction code

  Measure: Notify your dealer and report the malfunction code.

If the system does not properly operate except for the above mentioned cases and none of the above mentioned malfunctions is evident, investigate the system according to the following procedures.

1 If the system does not operate at all

- Check if there is no power failure.
  Wait until power is restored. If power failure occurs during operation, the system automatically restarts immediately after the power supply is recovered.
- Check if no fuse has blown or breaker has worked. Change the fuse or reset the breaker if necessary.

2 If the system goes into fan only operation, but as soon as it goes into heating or cooling operation, the system stops

- Check if air inlet or outlet of outdoor or air handling unit is not blocked by obstacles. Remove any obstacle and make it well-ventilated.

3 The system operates but cooling or heating is insufficient

- Check if air inlet or outlet of outdoor or air handling unit is not blocked by obstacles.
- Remove any obstacle and make it well-ventilated.
- Check if the air filter is not clogged. (Refer to "Maintenance" in the air handling unit manual.)
- Check the temperature setting.
- Check the fan speed setting on your remote control.
- Check for open doors or windows. Shut doors and windows to prevent wind from coming in.
- Check if there are too many occupants in the room during cooling operation
- Check if the heat source of the room is excessive.
- Check if direct sunlight enters the room. Use curtains or blinds.
- Check if the air flow angle is proper.

If after checking all above items, it is impossible to fix the problem yourself, contact your dealer and state the symptoms, the complete model name of the air conditioner (with manufacturing number if possible) and the installation date (possibly listed on the warranty card).

12. After-sales service and warranty

Warranty period

- This product includes a warranty card that was filled out by the dealer at the time of installation. The completed card was checked by the customer and stored carefully.
- If repairs to the air conditioner are necessary within the warranty period, contact your dealer and keep the warranty card at hand.

12.1. After-sales service

- Recommendations for maintenance and inspection
  Since dust collects when using the unit for several years, performance of the unit will deteriorate to some extent.
  As taking apart and cleaning interiors of units requires technical expertise and in order to ensure the best possible maintenance of your units, we recommend to enter into a maintenance and inspection contract on top of normal maintenance activities.
  Our network of dealers has access to a permanent stock of essential components in order to keep your air conditioner in operation as long as possible.
  Contact your dealer for more information.
- When asking your dealer for an intervention, always state:
  - the complete model name of the air conditioner
  - the manufacturing number (stated on the nameplate of the unit)
  - the installation date
  - the symptoms or malfunction, and details of the defect.

WARNING

- Do not modify, disassemble, remove, reinstall or repair the unit yourself as incorrect dismantling or installation may cause an electric shock or fire.
  Contact your dealer.
- In case of accidental refrigerant leaks, make sure there are no naked flames. The refrigerant itself is entirely safe, non-toxic and non-combustible, but it will generate toxic gas when it accidentally leaks into a room where combustible air from fan heaters, gas cookers, etc. ... is present.
  Always have qualified service personnel confirm that the point of leakage has been repaired or corrected before resuming operation.

- Recommended inspection and maintenance cycles

Be aware that the mentioned maintenance and replacement cycles do not relate to the warranty period of the components.

Table 1: "Inspection Cycle" and "Maintenance Cycle" list

Component	Inspection cycle	Maintenance cycle (replacements and/or repairs)
Electric motor	1 year	20,000 hours
PCB		25,000 hours
Heat exchanger		5 years
Sensor (thermistor, etc.)		5 years
Remote control and switches		25,000 hours
Drain pan		8 years
Expansion valve		20,000 hours
Electromagnetic valve		20,000 hours

Table 1 assumes the following conditions of use:

1. Normal use without frequent starting and stopping of the unit. Depending on the model, we recommend not starting and stopping the machine more than 6 times/hour.
2. Operation of the unit is assumed to be 10 hours/day and 2,500 hours/year.

NOTE

1. Table 1 indicates main components.
   Refer to your maintenance and inspection contract for more details.
2. Table 1 indicates recommended intervals of maintenance cycles. However, in order to keep the unit operational as long as possible, maintenance work may be required sooner.
   Recommended intervals can be used for appropriate maintenance design in terms of budgetting maintenance and inspection fees. Depending on the content of the maintenance and inspection contract, inspection and maintenance cycles may in reality be shorter than listed.

12.2. Shortening of "maintenance cycle" and "replacement cycle" needs to be considered in following situations

- The unit is used in locations where:

1. heat and humidity fluctuate out of the ordinary
2. power fluctuation is high (voltage, frequency, wave distortion, etc.)
   (The unit cannot be used if power fluctuation is outside the allowable range.)
3. bumps and vibrations are frequent
4. dust, salt, harmful gas or oil mist such as sulfurous acid and hydrogen sulfide may be present in the air
5. the machine is started and stopped frequently or operation time is long (sites with 24 hour air-conditioning).

■ Recommended replacement cycle of wear parts

Table 2: "Replacement Cycle" list

Component	Inspection cycle	Maintenance cycle (replacements and/or repairs)
Air filter	1 year	5 years
High efficiency filter (Optional)		1 year
Fuse		10 years
Crankcase heater		8 years

NOTE

1. Table 2 indicates main components.
   Refer to your maintenance and inspection contract for more details.
2. Table 2 indicates recommended intervals of replacement cycles. However, in order to keep the unit operational as long as possible, maintenance work may be required sooner.
   Recommended intervals can be used for appropriate maintenance design in terms of budgetting maintenance and inspection fees.

Contact your dealer for details.

NOTE

Damage due to taking apart or cleaning interiors of units by anyone other than our authorised dealers may not be included in the warranty.

■ Moving and discarding the unit

- Contact your dealer for removing and reinstalling the total unit. Moving units requires technical expertise.
- This unit uses hydrofluorocarbon.
  Contact your dealer when discarding this unit. It is required by law to collect, transport and discard the refrigerant in accordance with the "hydrofluorocarbon collection and destruction" regulations.

NOTES

Part 8
Troubleshooting

1. Symptom-based Troubleshooting 171
2. Troubleshooting by Remote Control 174
2.1 The INSPECTION / TEST Button.....174
2.2 Self-diagnosis by Wired Remote Control 175
2.3 Remote Control Service Mode 176
2.4 Remote Control Self-Diagnosis Function 178
3. Troubleshooting by Indication on the Remote Control 185
3.1 “A0” AHU: Error of External Protection Device.....185
3.2 “A1” AHU: PC Board Defect 186
3.3 “A3” AHU: Malfunction of Drain Level Control System (S1L) 187
3.4 “A6” AHU: Fan Motor (M1F) Lock, Overload.....189
3.5 “A9” AHU: Malfunction of Moving Part of Electronic Expansion Valve (Y1E) 190
3.6 “AF” AHU: Drain Level above Limit 192
3.7 “AJ” AHU: Malfunction of Capacity Determination Device 193
3.8 “C4” AHU: Malfunction of Thermistor (R2T) for Heat Exchanger 194
3.9 “C5” AHU: Malfunction of Thermistor (R3T) for Gas Pipes 195
3.10 “C9” AHU: Malfunction of Thermistor (R1T) for Suction Air 196
3.11 “CJ” AHU: Malfunction of Thermostat Sensor in Remote Control 197
3.12 “E1” Outdoor Unit: PC Board Defect 198
3.13 “E3” Outdoor Unit: Actuation of High Pressure Switch.....199
3.14 “E4” Outdoor Unit: Actuation of Low Pressure Sensor.....201
3.15 “E5” Outdoor Unit: Inverter Compressor Motor Lock.....203
3.16 “E6” Outdoor Unit: STD Compressor Motor Overcurrent/Lock.....205
3.17 “E7” Outdoor Unit: Malfunction of Outdoor Unit Fan Motor 206
3.18 “E9” Outdoor Unit: Malfunction of Moving Part of Electronic Expansion Valve (Y1E, Y2E) 209
3.19 “F3” Outdoor Unit: Abnormal Discharge Pipe Temperature 211
3.20 “F6” Outdoor Unit: Refrigerant Overcharged.....212
3.21 “H7” Outdoor Unit: Abnormal Outdoor Fan Motor Signal 213
3.22 “H9” Outdoor Unit: Malfunction of Thermistor (R1T) for Outdoor Air....214
3.23 “J2” Outdoor Unit: Current Sensor Malfunction 215
3.24 “J3” Outdoor Unit: Malfunction of Discharge Pipe Thermistor (R3, R31~33T) 216
3.25 “J5” Outdoor Unit: Malfunction of Thermistor (R2T), (R7T) for Suction Pipe 217
3.26 “J6” Outdoor Unit: Malfunction of Thermistor (R4T) for Outdoor Unit Heat Exchanger 218
3.27 “J7” Outdoor Unit: Malfunction of Liquid Pipe Thermistor (R6T) 219
3.28 “J9” Outdoor Unit: Malfunction of Subcooling Heat Exchanger Gas Pipe Thermistor (R5T).....220
3.29 “JA” Outdoor Unit: Malfunction of High Pressure Sensor.....221
3.30 “JC” Outdoor Unit: Malfunction of Low Pressure Sensor 222

3.31 “L4” Outdoor Unit: Malfunction of Inverter Radiating Fin Temperature Rise 223
3.32 “L5” Outdoor Unit: Inverter Compressor Abnormal 225
3.33 “L8” Outdoor Unit: Inverter Current Abnormal 227
3.34 “L9” Outdoor Unit: Inverter Start up Error 229
3.35 “LC” Outdoor Unit: Malfunction of Transmission Between Inverter and Control PC Board 231
3.36 “P1” Outdoor Unit: Inverter Over-Ripple Protection.....234
3.37 “P4” Outdoor Unit: Malfunction of Inverter Radiating Fin Temperature Rise Sensor 235
3.38 “PJ” Outdoor Unit: Faulty Field Setting after Replacing Main PC Board or Faulty Combination of PC Board.....237
3.39 “UO” Outdoor Unit: Low Pressure Drop Due to Refrigerant Shortage or Electronic Expansion Valve Failure.....238
3.40 “U1” Reverse Phase, Open Phase.....239
3.41 “U2” Outdoor Unit: Power Supply Insufficient or Instantaneous Failure 240
3.42 “U3” Outdoor Unit: Check Operation not Executed 243
3.43 “U4” Malfunction of Transmission Between AHUs 244
3.44 “U5” AHU: Malfunction of Transmission Between Remote Control and AHU.....246
3.45 “U9” AHU: Malfunction of Transmission Between AHU and Outdoor Units in the Same System 247
3.46 “UA” Improper Combination of AHU and Outdoor Units, AHUs and Remote Control 248
3.47 “UF” System is not Set yet 250
3.48 “UH” Malfunction of System, Refrigerant System Address Undefined .251
4. Troubleshooting (OP: Unified ON/OFF Controller) 253
4.1 Operation Lamp Blinks 253

1. Symptom-based Troubleshooting

	Symptom		Supposed Cause	Countermeasure
1	The system does not start operation at all.		Blowout of fuse(s)	Turn Off the power supply and then replace the fuse(s).
			Cutout of breaker(s)	• If the knob of any breaker is in its OFF position, turn ON the power supply. • If the knob of any circuit breaker is in its tripped position, do not turn ON the power supply. 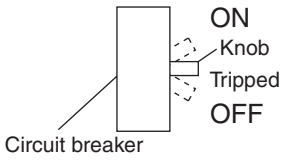
			Power failure	After the power failure is reset, restart the system.
2	The system starts operation but makes an immediate stop.		Blocked air inlet or outlet of AHU or outdoor unit	Remove obstacle(s).
			Clogged air filter(s)	Clean the air filter(s).
3	The system does not cool or heat air well.		Blocked air inlet or outlet of AHU or outdoor unit	Remove obstacle(s).
			Clogged air filter(s)	Clean the air filter(s).
			Enclosed outdoor unit(s)	Remove the enclosure.
			Improper set temperature	Set the temperature to a proper degree.
			Airflow rate set to "LOW"	Set it to a proper airflow rate.
			Improper direction of air diffusion	Set it to a proper direction.
			Open window(s) or door(s)	Shut it tightly.
		[In cooling]	Direct sunlight received	Hang curtains or shades on windows.
		[In cooling]	Too many persons staying in a room	
		[In cooling]	Too many heat sources (e.g. OA equipment) located in a room	
4	The system does not operate.	The system stops and immediately restarts operation.	If the OPERATION lamp on the remote control turns ON, the system will be normal. These symptoms indicate that the system is controlled so as not to put unreasonable loads on the system.	Normal operation. The system will automatically start operation after a lapse of five minutes.
		Pressing the TEMP ADJUST button immediately resets the system.		
		The system stops immediately after turning ON the power supply.	The system is in preparation mode of micro computer operation.	Wait for a period of approximately one minute.
5	The system makes intermittent stops.	The remote control displays malfunction codes "U4" and "U5", and the system stops but restarts after a lapse of several minutes.	The system stops due to an interruption in communication between units caused by electrical noises coming from equipment other than air conditioners.	Remove causes of electrical noises. If these causes are removed, the system will automatically restart operation.
7	The system conducts fan operation but not cooling or heating operation.	This symptom occurs immediately after turning ON the power supply.	The system is in preparation mode of operation.	Wait for a period of approximately 10 minutes.

	Symptom		Supposed Cause	Countermeasure
8	The airflow rate is not reproduced according to the setting.	Even pressing the AIRFLOW RATE SET button makes no changes in the airflow rate.	In heating operation, when the room temperature reaches the set degree, the outdoor unit will stop while the AHU is brought to fan LL operation so that no one gets cold air. Furthermore, if fan operation mode is selected when other AHU is in heating operation, the system will be brought to fan LL operation. (The fan LL operation is also enabled while in oil return mode in cooling operation.)	Normal operation.
9	The airflow direction is not reproduced according to the setting.	The airflow direction is not corresponding to that displayed on the remote control. The flap does not swing.	Automatic control	Normal operation.
10	A white mist comes out from the system.	<AHU> In cooling operation, the ambient humidity is high. (This AHU is installed in a place with much oil or dust.)	Uneven temperature distribution due to heavy stain of the inside of the AHU.	Clean the inside of the AHU.
		<AHU> Immediately after cooling operation stopping, the ambient temperature and humidity are low.	Hot gas (refrigerant) flown in the AHU results to be vapor from the unit.	Normal operation.
		<AHU and outdoor units> After the completion of defrosting operation, the system is switched to heating operation.	Defrosted moisture turns to be vapor and comes out from the units.	Normal operation.
11	The system produces sounds.	<AHU> Immediately after turning ON the power supply, AHU produces "ringing" sounds.	These are operating sounds of the electronic expansion valve of the AHU.	Normal operation. This sound becomes low after a lapse of approximately one minute.
		<AHU and outdoor units> "Hissing" sounds are continuously produced while in cooling or defrosting operation.	These sounds are produced from gas (refrigerant) flowing respectively through the AHU and outdoor units.	Normal operation.
		<AHU and outdoor units> "Hissing" sounds are produced immediately after the startup or stop of the system, or the startup or stop of defrosting operation.	These sounds are produced when the gas (refrigerant) stops or changes flowing.	Normal operation.
		<AHU> Faint sounds are continuously produced while in cooling operation or after stopping the operation.	These sounds are produced from the drain discharge device in operation.	Normal operation.
		<AHU> "Creaking" sounds are produced while in heating operation or after stopping the operation.	These sounds are produced from resin parts expanding and contracting with temperature changes.	Normal operation.
		<AHU> Sounds like "trickling" or the like are produced from AHUs in the stopped state.	On VRV systems, these sounds are produced when other AHUs in operation. The reason is that the system runs in order to prevent oil or refrigerant from dwelling.	Normal operation.
		<Outdoor unit> Pitch of operating sounds changes.	The reason is that the compressor changes the operating frequency.	Normal operation.
12	Dust comes out from the system.	Dust comes out from the system when it restarts after the stop for an extended period of time.	Dust, which has deposited on the inside of AHU, is blown out from the system.	Normal operation.
13	Odors come out from the system.	In operation	Odors of room, cigarettes or else adsorbed to the inside of AHU are blown out.	The inside of the AHU should be cleaned.

	Symptom		Supposed Cause	Countermeasure
14	Outdoor unit fan does not rotate.	In operation	The reason is that fan revolutions are controlled to put the operation to the optimum state.	Normal operation.
15	LCD display "88" appears on the remote control.	Immediately after turning ON the power supply	The reason is that the system is checking to be sure the remote control is normal.	Normal operation. This code is displayed for a period of approximately one minute at maximum.
16	The outdoor unit compressor or the outdoor unit fan does not stop.	After stopping operation	It stops in order to prevent oil or refrigerant from dwelling.	Normal operation. It stops after a lapse of approximately 5 to 10 minutes.
17	The outdoor gets hot.	While stopping operation	The reason is that the compressor is warmed up to provide smooth startup of the system.	Normal operation.
18	Hot air comes out from the system even though it stops.	Hot air is felt while the system stops.	On VRV systems, small quantity of refrigerant is fed to AHUs in the stopped state when other AHUs are in operation.	Normal operation.
19	The system does not cool air well.	The system is in dry operation.	The reason is that the dry operation serves not to reduce the room temperature where possible.	Change the system to cooling operation.

2. Troubleshooting by Remote Control

2.1 The INSPECTION / TEST Button

The following modes can be selected by using the [Inspection/Test Operation] button on the remote control.

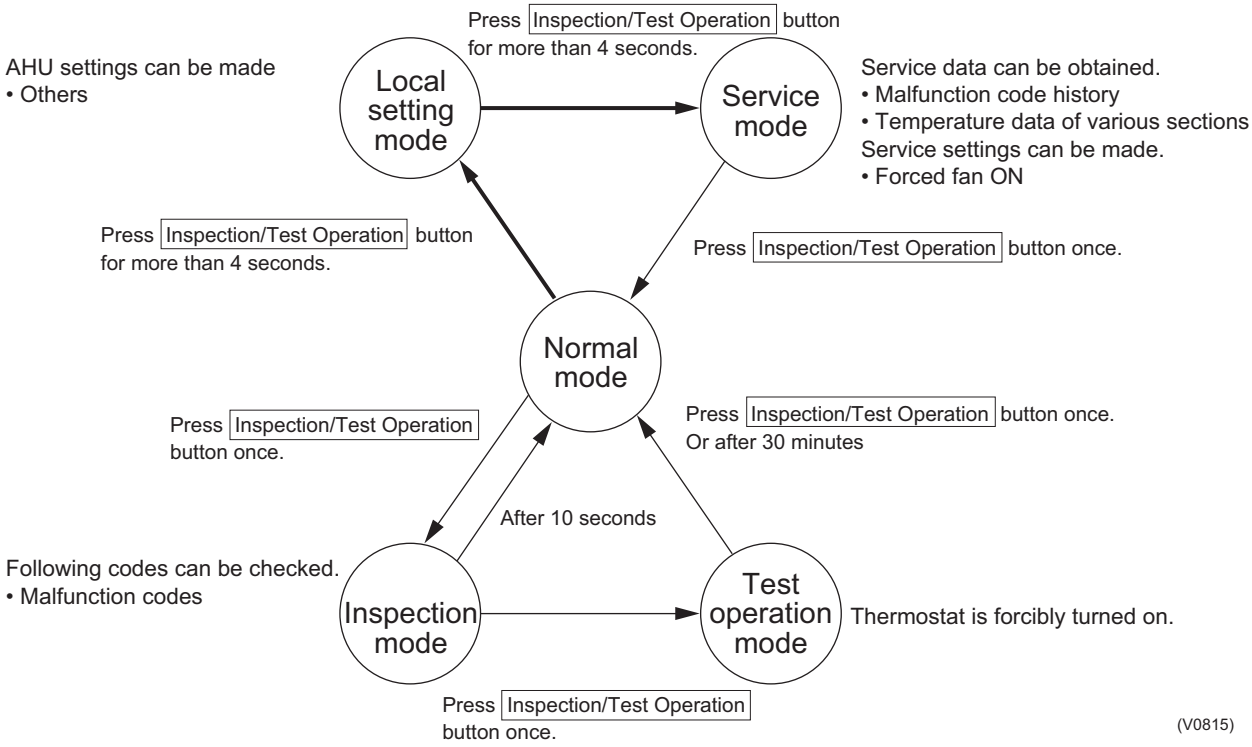

2.2 Self-diagnosis by Wired Remote Control

Explanation

If operation stops due to malfunction, the remote control's operation LED blinks, and malfunction code is displayed. (Even if stop operation is carried out, malfunction contents are displayed when the inspection mode is entered.) The malfunction code enables you to tell what kind of malfunction caused operation to stop. See page 179 for malfunction code and malfunction contents.

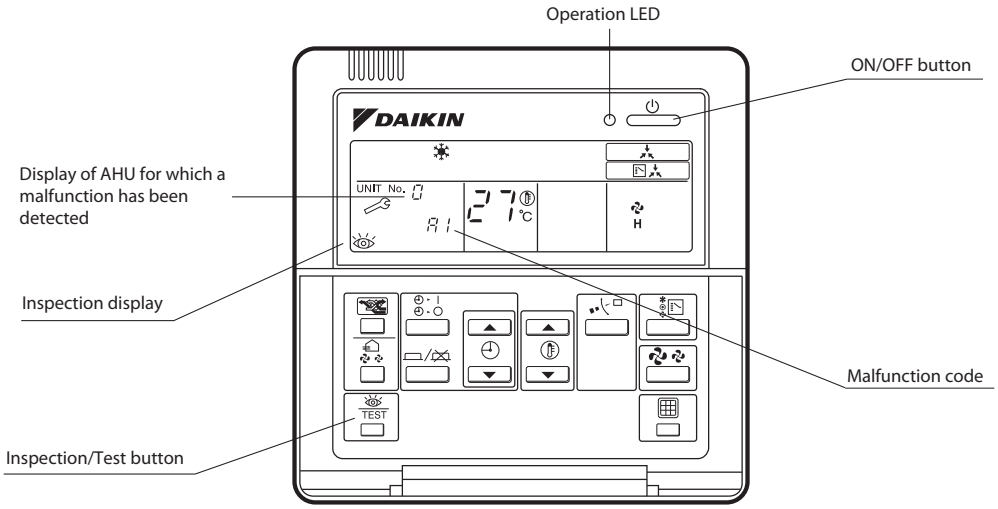

Note:

1. Pressing the INSPECTION/TEST button will blink the check indication.
2. While in check mode, pressing and holding the ON/OFF button for a period of five seconds or more will clear the failure history indication shown above. In this case, on the codes display, the malfunction code will blink twice and then change to "00" (=Normal), the Unit No. will change to "0", and the operation mode will automatically switch from check mode to normal mode (displaying the set temperature).

2.3 Remote Control Service Mode

How to Enter the Service Mode

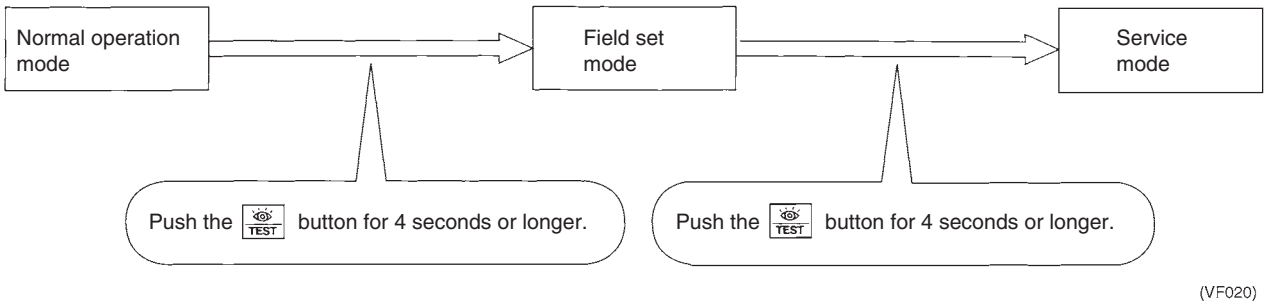

Service Mode Operation Method

1. Select the mode No.
Set the desired mode No. with the button.
(For infrared remote control, Mode 43 only can be set.)
2. Return to the normal operation mode.
Push the TEST button one time.

Mode No	Function	Contents and operation method	Remote control display example
40	Malfunction history display	Display malfunction history. The history No. can be changed with the button.	Unit 1 Malfunction code 40 2-U4 Malfunction code Hystory No: 1 - 9 1: Latest (VE007)
41	Display of sensor and address data	Display various types of data. Select the data to be displayed with the button. Sensor data 0: Thermostat sensor in remote control. 1: Suction or level (if DDC-control: 0 = level 1 etc.) 2: Liquid pipe 3: Gas pipe	Sensor data display Unit No. Sensor type 1 1 2 7 41 Temperature °C Address display Unit No. Address type 1 8 1 41 Address (VE008)
43	Forced fan ON	Manually turn the fan ON by each unit. (When you want to search for the unit No.) By selecting the unit No. with the button, you can turn the fan of each AHU on (forced ON) individually.	Unit 1 43 (VE009)

2.4 Remote Control Self-Diagnosis Function

The remote control switches are equipped with a self diagnosis function so that more appropriate maintenance can be carried out. If a malfunction occurs during operation, the operation lamp, malfunction code and display of malfunctioning unit No. let you know the contents and location of the malfunction.
When there is a stop due to malfunction, the contents of the malfunction given below can be diagnosed by a combination of operation lamp, INSPECTION display of the liquid crystal display and display of malfunction code.

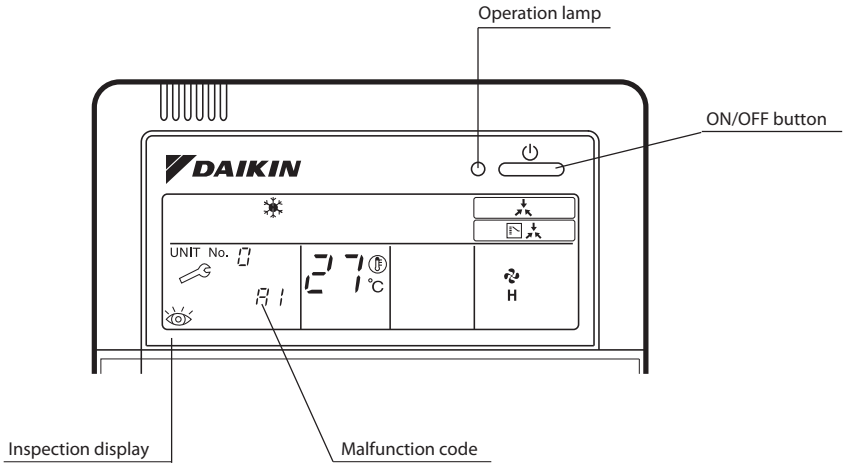

(VL050)

☼: ON ●: OFF ☼: Blink

	Malfunction code	Operation lamp	Inspection display	Unit No.	Malfunction contents	Page Referred
AHU	A0	☼	☼	☼	Error of external protection device	185
	A1	☼	☼	☼	PC board defect, E^2 PROM defect	186
	A3	☼	☼	☼	Malfunction of drain level control system (S1L)	187
	A6	☼	☼	☼	Fan motor (M1F) lock, overload	189
	A9	☼	☼	☼	Malfunction of moving part of electronic expansion valve (20E)	190
	AF	☼	●	☼	Drain level about limit	192
	AH	☼	●	☼	Malfunction of air filter maintenance	—
	AJ	☼	☼	☼	Malfunction of capacity setting	193
	C4	☼	☼	☼	Malfunction of thermistor (R2T) for heat exchange (loose connection, disconnection, short circuit, failure)	194
	C5	☼	☼	☼	Malfunction of thermistor (R3T) for gas pipes (loose connection, disconnection, short circuit, failure)	195
	C9	☼	☼	☼	Malfunction of thermistor (R1T) for air inlet (loose connection, disconnection, short circuit, failure)	196
	CJ	☼	☼	☼	Malfunction of thermostat sensor in remote control	197
Outdoor Unit	E1	☼	☼	☼	PC board defect	198
	E3	☼	☼	☼	Actuation of high pressure switch	199
	E4	☼	☼	☼	Actuation of low pressure sensor	201
	E5	☼	☼	☼	Compressor motor lock	203
	E6	☼	☼	☼	Standard compressor lock or over current	205
	E7	☼	☼	☼	Malfunction of outdoor unit fan motor	206
	E9	☼	☼	☼	Malfunction of moving part of electronic expansion valve (Y1E, Y2E)	209
	F3	☼	☼	☼	Abnormal discharge pipe temperature	211
	F6	☼	☼	☼	Refrigerant overcharged	212
	H7	☼	☼	☼	Abnormal outdoor fan motor signal	213
	H9	☼	☼	☼	Malfunction of thermistor (R1T) for outdoor air (loose connection, disconnection, short circuit, failure)	214
	J2	☼	☼	☼	Current sensor malfunction	215
	J3	☼	☼	☼	Malfunction of discharge pipe thermistor (R31~33T) (loose connection, disconnection, short circuit, failure)	216
	J5	☼	☼	☼	Malfunction of thermistor (R2T) for suction pipe (loose connection, disconnection, short circuit, failure)	217
	J6	☼	☼	☼	Malfunction of thermistor (R4T) for heat exchanger (loose connection, disconnection, short circuit, failure)	218
	J7	☼	☼	☼	Malfunction of receiver outlet liquid pipe thermistor (R6T)	219
	J9	☼	☼	☼	Malfunction of subcooling heat exchanger gas pipe thermistor (R5T)	220
	JA	☼	☼	☼	Malfunction of discharge pipe pressure sensor	221
	JC	☼	☼	☼	Malfunction of suction pipe pressure sensor	222
	L0	☼	☼	☼	Inverter system error	—
	L4	☼	☼	☼	Malfunction of inverter radiating fin temperature rise	223
	L5	☼	☼	☼	DC output overcurrent of inverter compressor	225
	L8	☼	☼	☼	Inverter current abnormal	227
	L9	☼	☼	☼	Inverter start up error	229

☼: ON ●: OFF ☼: Blink

	Malfunction code	Operation lamp	Inspection display	Unit No.	Malfunction contents	Page Referred
Outdoor Unit	LA	☼	☼	☼	Malfunction of power unit	—
	LC	☼	☼	☼	Malfunction of transmission between inverter and control PC board	231
	P1	☼	☼	☼	Inverter over-ripple protection	234
	P4	☼	☼	☼	Malfunction of inverter radiating fin temperature rise sensor	235
	PJ	☼	☼	☼	Faulty field setting after replacing main PC board or faulty combination of PC board	237
System	U0	☼	●	☼	Low pressure drop due to refrigerant shortage or electronic expansion valve failure	238
	U1	☼	☼	☼	Reverse phase / open phase	239
	U2	☼	☼	☼	Power supply insufficient or instantaneous failure	240
	U3	☼	☼	☼	Check operation is not completed.	243
	U3	☼	●	☼	Check operation is not completed.	243
	U4	☼	☼	☼	Malfunction of transmission between AHU and outdoor units	244
	U5	☼	☼	☼	Malfunction of transmission between remote control and AHU	246
	U5	●	☼	●	Failure of remote control PC board or setting during control by remote control	246
	U9	☼	☼	☼	Malfunction of transmission between AHU and outdoor unit in the same system	247
	UA	☼	☼	☼	Improper combination of AHU and outdoor units, AHUs and remote control	248
	UE	☼	☼	☼	Malfunction of transmission between central remote control and AHU	—
	UF	☼	☼	☼	Refrigerant system not set, incompatible wiring / piping	250
	UH	☼	☼	☼	Malfunction of system, refrigerant system address undefined	251

The system operates for malfunction codes indicated in black squares, however, be sure to check and repair.

Malfunction code indication by outdoor unit PC board

<Monitor mode>

To enter the monitor mode, push the MODE (BS1) button when in "Setting mode 1".

* Refer to P.184 for Monitor mode.

<Selection of setting item>

Push the SET (BS2) button and set the LED display to a setting item.

* Refer to P.184 for Monitor mode.

<Confirmation of malfunction 1>

Push the RETURN (BS3) button once to display "First digit" of malfunction code.

<Confirmation of malfunction 2>

Push the SET (BS2) button once to display "Second digit" of malfunction code.

<Confirmation of malfunction 3>

Push the SET (BS2) button once to display "malfunction location".

Detail description on next page.

<Confirmation of malfunction 4>

Push the SET (BS2) button once to display "master or slave 1 or slave 2" and "malfunction location".

Push the RETURN (BS3) button and switch to the initial status of "Monitor mode".

∗ Push the MODE (BS1) button and return to "Setting mode 1".

Contents of malfunction		Malfunction code
Abnormal discharge pressure	HPS activated	E3
Abnormal suction pressure	Abnormal Pe	E4
Compressor lock	Detection of INV compressor lock	E5
Activation of OC	Detection of STD1 compressor lock	E6
	Detection of STD2 compressor lock	
Over load, over current, abnormal lock of outdoor unit fan motor	Instantaneous over current of DC fan 1 motor	E7
	Detection of DC fan 1 motor lock	
	Instantaneous over current of DC fan 2 motor	
	Detection of DC fan 2 motor lock	
Malfunction of electronic expansion valve	EV1	E9
	EV2	
	EV3	
Abnormal position signal of outdoor unit fan motor	Abnormal position signal of DC fan 1 motor	H7
	Abnormal position signal of DC fan 2 motor	
Faulty sensor of outdoor air temperature	Faulty Ta sensor (short)	H9
	Faulty Ta sensor (open)	
Abnormal discharge pipe temperature	Abnormal Td	F3
Abnormal heat exchanger temperature	Refrigerant over charge	F6
Faulty current sensor	Faulty CT1 sensor	J2
	Faulty CT2 sensor	
Faulty sensor of discharge pipe temperature	Faulty Tdi sensor (short)	J3
	Faulty Tds1 sensor (short)	
	Faulty Tds2 sensor (short)	
	Faulty Tdi sensor (open)	
	Faulty Tds1 sensor (open)	
	Faulty Tds2 sensor (open)	
Faulty sensor of suction pipe temperature	Faulty Ts1 sensor (short)	J5
	Faulty Ts1 sensor (open)	
	Faulty Ts2 sensor (short)	
	Faulty Ts2 sensor (open)	
Faulty sensor of heat exchanger temperature	Faulty Tb sensor (short)	J6
	Faulty Tb sensor (open)	
Malfunction of the liquid pipe temperature sensor	Faulty Tl sensor (short)	J7
	Faulty Tl sensor (open)	
Faulty sensor of subcool heat exchanger temperature	Faulty Tsh sensor (short)	J9
	Faulty Tsh sensor (open)	
Faulty sensor of discharge pressure	Faulty Pc sensor (short)	JA
	Faulty Pc sensor (open)	
Faulty sensor of suction pressure	Faulty Pe sensor (short)	JC
	Faulty Pe sensor (open)	
Instantaneous power failure	∗NO display on remote control (Judge during compressor operation)	(L2)
Inverter radiation fin temperature rising	Over heating of inverter radiation fin temperature	L4
DC output over current	Inverter instantaneous over current	L5
	IGBT malfunction	L5
Electronic thermal	Electronic thermal switch 1	L8
	Electronic thermal switch 2	
	Out-of-step	
	Speed down after startup	
	Lightening detection	
Stall prevention (Limit time)	Stall prevention (Current increasing)	L9
	Stall prevention (Faulty start up)	
	Abnormal wave form in startup	
	Out-of-step	
Transmission error between inverter and outdoor unit	Inverter transmission error	LC

☼: ON ●: OFF ☼:Blink

Malfunction code	Confirmation of malfunction 1							Confirmation of malfunction 2							Confirmation of malfunction 3							Confirmation of malfunction 4						
	H1P	H2P	H3P	H4P	H5P	H6P	H7P	H1P	H2P	H3P	H4P	H5P	H6P	H7P	H1P	H2P	H3P	H4P	H5P	H6P	H7P	H1P	H2P	H3P	H4P	H5P	H6P	H7P
E3	☼			●	●	☼	☼	☼			●	●	☼	☼	☼			●	●	●	●	☼			●	●		
E4								☼			●	☼	●	●	☼			●	●	●	●	☼			●	●		
E5								☼			●	☼	●	☼	☼			●	●	●	●	☼			●	●		
E6								☼			●	☼	☼	●	☼			●	●	●	●	☼			●	●		
															☼			●	●	●	●	☼			●	☼		
E7								☼			●	☼	☼	☼	☼			●	●	●	●	☼			●	●		
															☼			●	●	●	●	☼			●	☼	∗1	
															☼			●	●	●	☼	☼			●	●		
															☼			●	●	●	☼	☼			●	☼		
E9								☼			☼	●	●	☼	☼			●	●	●	●	☼			●	●		
															☼			●	●	●	●	☼			●	☼		
															☼			●	●	●	●	☼			☼	●		
H7	☼			●	☼	●	●	☼			●	☼	☼	☼	☼			●	●	●	●	☼			●	●		
															☼			●	●	●	☼	☼			●	●	∗1	
H9								☼			☼	●	●	☼	☼			●	●	●	●	☼			●	●		
															☼			●	●	●	☼	☼			●	●		
F3	☼			●	☼	●	☼	☼			●	●	☼	☼	☼			●	●	●	●	☼			●	●	∗1	
F6								☼			●	☼	☼	●	☼			●	●	●	●	☼			●	●	☼	☼
J2	☼			●	☼	☼	●	☼			●	●	☼	●	☼			●	●	●	●	☼			●	●		
															☼			●	●	●	●	☼			●	☼		
J3								☼			●	●	☼	☼	☼			●	●	●	●	☼			●	●		
															☼			●	●	●	●	☼			●	☼		
															☼			●	●	●	●	☼			☼	●		
															☼			●	●	●	☼	☼			●	●		
															☼			●	●	●	☼	☼			●	☼		
															☼			●	●	●	☼	☼			☼	●		
J5								☼			●	☼	●	☼	☼			●	●	●	●	☼			●	●		
															☼			●	●	●	☼	☼			●	●		
															☼			●	●	●	●	☼			●	☼	∗1	
															☼			●	●	●	☼	☼			●	☼		
J6								☼			●	☼	☼	●	☼			●	●	●	●	☼			●	●		
															☼			●	●	●	☼	☼			●	●		
J7								☼			●	☼	☼	☼	☼			●	●	●	●	☼			●	●		
															☼			●	●	●	☼	☼			●	●		
J9								☼			☼	●	●	☼	☼			●	●	●	●	☼			●	●		
															☼			●	●	●	☼	☼			●	●		
JA								☼			☼	●	☼	●	☼			●	●	●	●	☼			●	●		
															☼			●	●	●	☼	☼			●	●		
JC								☼			☼	☼	●	●	☼			●	●	●	●	☼			●	●		
															☼			●	●	●	☼	☼			●	●		
(L2)	☼			●	☼	☼	☼	☼			●	●	☼	●	☼			●	●	●	●	☼			●	●		
L4								☼			●	☼	●	●	☼			●	●	●	●	☼			●	●		
L5								☼			●	☼	●	☼	☼			●	●	●	●	☼			●	●		
L5															☼			●	●	●	●	☼			●	☼		
L8								☼			☼	●	●	●	☼			●	●	●	●	☼			●	●		
															☼			●	●	●	●	☼			●	☼		
															☼			●	●	●	●	☼						
															☼			●	●	●	●	☼			☼	●	∗1	
															☼			●	●	●	☼	☼			●	●		
L9								☼			☼	●	●	☼	☼			●	●	●	●	☼			●	●		
															☼			●	●	●	●	☼			●	●		
															☼			●	●	●	●	☼			●	☼		
															☼			●	●	●	●	☼			☼	●		
LC								☼			☼	☼	●	●	☼			●	●	●	●	☼			●	☼		

Display of contents of malfunction (first digit) — Display of contents of malfunction (second digit) — Display 1 of malfunction in detail — Display 2 of malfunction in detail

∗1		
●	●	Master
●	☼	Slave1
☼	●	Slave2
☼	☼	System

<Monitor mode>

To enter the monitor mode, push the MODE (BS1) button when in “Setting mode 1”.

* Refer to P.184 for Monitor mode.

<Selection of setting item>

Push the SET (BS2) button and set the LED display to a setting item.

* Refer to P.184 for Monitor mode.

<Confirmation of malfunction 1>

Push the RETURN (BS3) button once to display "First digit" of malfunction code.

<Confirmation of malfunction 2>

Push the SET (BS2) button once to display "Second digit" of malfunction code.

<Confirmation of malfunction 3>

Push the SET (BS2) button once to display "malfunction location".

Detail description on next page.

<Confirmation of malfunction 4>

Push the SET (BS2) button once to display "master or slave 1 or slave 2" and "malfunction location".

Push the RETURN (BS3) button and switch to the initial status of “Monitor mode”.

* Push the MODE (BS1) button and return to “Setting mode 1”.

Contents of malfunction		Malfunction code
Open phase/Power supply imbalance	Imbalance of inverter power supply voltage	P1
Faulty temperature sensor inside switch box	Faulty thermistor of inverter box	P3
Faulty temperature sensor of inverter radiation fin	Faulty thermistor of inverter fin	P4
Incorrect combination of Inverter and fan driver	Incorrect combination of inverter	PJ
	Incorrect combination of fan driver 1	
	Incorrect combination of fan driver 2	
Gas shortage	Gas shortage alarm	U0
Reverse phase	Reverse phase error	U1
Abnormal power supply voltage	Insufficient Inverter voltage	U2
	Inverter open phase (phase T)	
	Charging error of capacitor in inverter main circuit	
No implementation of test-run		U3
Transmission error between AHU and outdoor unit	I/O transmission error	U4
	I/O transmission error	
Transmission error between outdoor units, transmission error between thermal storage units, duplication of IC address	Sequential startup ADP alarm	U7
	Sequential startup ADP malfunction	U7
	Malfunction of transmission between multi units (Multi 1)	
	Malfunction of transmission between multi units (Multi 2)	
	Abnormal multi horsepower setting	
	Abnormal multi address setting	
	Excessive multi connections	
	Multi system malfunction	
Transmission error of other system	AHU system abnormal in other system or other AHU system abnormal in own system	U9
Erroneous field setting	System transmission malfunction	UA
	Overconnection malfunction of AHUs	
	Malfunction of field setting	
	Refrigerant abnormal	
	Multi-ID abnormal	
	Alarm of TSS field setting	UA
	Alarm of CT address setting	
Faulty system malfunction	Wiring error (Auto-address error)	UH
Transmission error in accessory devices	Malfunction of multi-level connection	UJ
	Alarm of multi-level connection	UJ
Conflict in wiring and piping, no setting for system	Conflict in wiring and piping	UF

☼: ON ●: OFF ☼:Blink

Malfunction code	Confirmation of malfunction 1							Confirmation of malfunction 2							Confirmation of malfunction 3							Confirmation of malfunction 4						
	H1P	H2P	H3P	H4P	H5P	H6P	H7P	H1P	H2P	H3P	H4P	H5P	H6P	H7P	H1P	H2P	H3P	H4P	H5P	H6P	H7P	H1P	H2P	H3P	H4P	H5P	H6P	H7P
P1	☼			☼	●	●	●	☼			●	●	●	☼	☼			●	●	●	●	☼			●	●		
P3								☼			●	●	☼	☼	☼			●	●	●	●	☼			●	●		
P4								☼			●	☼	●	●	☼			●	●	●	●	☼			●	●	*1	
PJ								☼			☼	☼	●	☼	☼			●	●	●	●	☼			●	●		
															☼			●	●	●	●	☼			●	☼		
															☼			●	●	●	●	☼			☼	●		
U0	☼			☼	●	●	☼	☼			●	●	●	●	☼			●	●	●	●	☼			●	●	☼	☼
U1								☼			●	●	●	☼	☼			●	●	●	●	☼			●	●		
U2								☼			●	●	☼	●	☼			●	●	●	●	☼			●	●		
															☼			●	●	●	●	☼			●	☼		
U3								☼			●	●	☼	☼	☼			●	●	●	●	☼			●	●	☼	☼
															☼			●	●	●	●	☼			●	☼	☼	☼
U4								☼			●	☼	●	●	☼			●	●	●	●	☼			●	●	☼	☼
															☼			●	●	●	●	☼			●	☼	☼	☼
U7								☼			●	☼	☼	☼	☼			●	●	●	●	☼			●	☼	☼	☼
U7															☼			●	●	●	●	☼			●	●	☼	☼
															☼			●	●	●	●	☼			☼	●	☼	☼
															☼			●	●	●	●	☼			☼	☼	☼	☼
															☼			●	●	●	☼	☼			●	●	☼	☼
															☼			●	●	●	☼	☼			●	☼	☼	☼
															☼			●	●	●	☼	☼			☼	●	☼	☼
															☼			●	●	●	☼	☼			☼	☼	☼	☼
U9								☼			☼	●	●	☼	☼			●	●	●	●	☼			●	●	☼	☼
UA								☼			☼	●	☼	●	☼			●	●	●	●	☼			●	●	☼	☼
															☼			●	●	●	●	☼			●	☼	☼	☼
															☼			●	●	●	●	☼			☼	●	☼	☼
															☼			●	●	●	☼	☼			●	●	☼	☼
															☼			●	●	●	☼	☼			●	☼	☼	☼
UA															☼			●	●	●	☼	☼			☼	●	☼	☼
															☼			●	●	●	☼	☼			☼	☼	☼	☼
UH								☼			☼	●	☼	☼	☼			●	●	●	●	☼			●	●	☼	☼
UJ								☼			☼	☼	●	☼	☼			●	●	●	●	☼			●	●	*1	
UJ															☼			●	●	●	●	☼			●	☼		
UF								☼			☼	☼	☼	☼	☼			●	●	●	●	☼			●	●	☼	☼

Display of contents of malfunction (first digit) — Display of contents of malfunction (second digit) — Display 1 of malfunction in detail — Display 2 of malfunction in detail

*1			
	●	●	Master
	●	☼	Slave1
	☼	●	Slave2
	☼	☼	System

3. Troubleshooting by Indication on the Remote Control

3.1 "A0" AHU: Error of External Protection Device

Remote Control Display

A0

Applicable Models

All AHU models

Method of Malfunction Detection

Detect open or short circuit between external input terminals in AHU.

Malfunction Decision Conditions

When an open circuit occurs between external input terminals with the remote control set to "external ON/OFF terminal".

Supposed Causes

- Actuation of external protection device
- Improper field set
- Defect of AHU PC board

Troubleshooting

Caution Be sure to turn off power switch before connect or disconnect connector, or parts damage may be occurred.

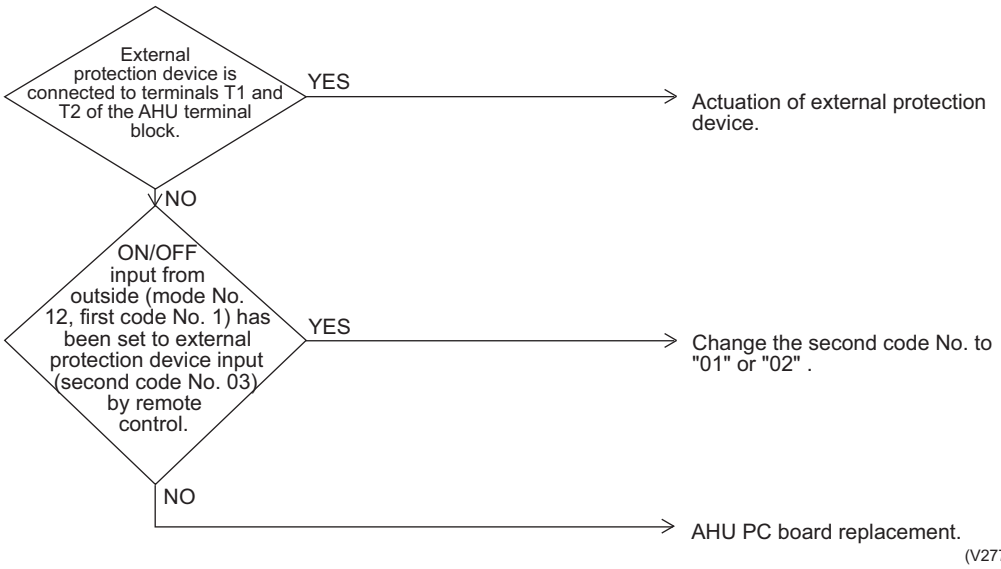

3.2 "A1" AHU: PC Board Defect

Remote Control Display

A1

Applicable Models

All AHU models

Method of Malfunction Detection

Check data from E²PROM.

Malfunction Decision Conditions

When data could not be correctly received from the E²PROM
E²PROM: Type of nonvolatile memory. Maintains memory contents even when the power supply is turned off.

Supposed Causes

- Defect of AHU PC board

Troubleshooting

Caution Be sure to turn off power switch before connect or disconnect connector, or parts damage may be occurred.

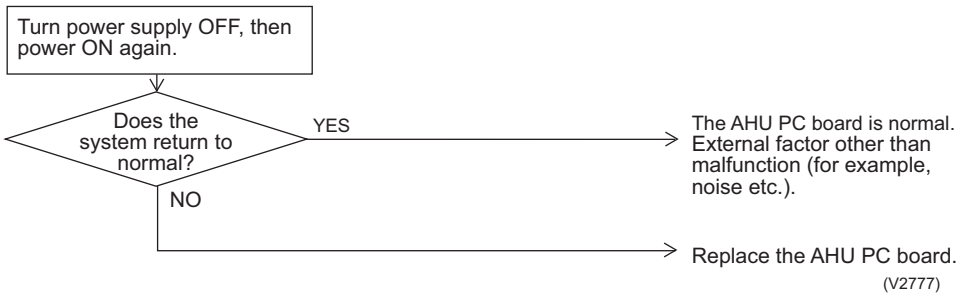

3.3 "A3" AHU: Malfunction of Drain Level Control System (S1L)

Remote Control Display	A3
Applicable Models	AHU
Method of Malfunction Detection	By float switch OFF detection
Malfunction Decision Conditions	When rise of water level is not a condition and the float switch goes OFF.
Supposed Causes	■ 220~240V power supply is not provided ■ Defect of float switch or short circuit connector ■ Defect of drain pump ■ Drain clogging, upward slope, etc. ■ Defect of AHU PC board ■ Loose connection of connector

Troubleshooting

Caution Be sure to turn off power switch before connect or disconnect connector, or parts damage may be occurred.

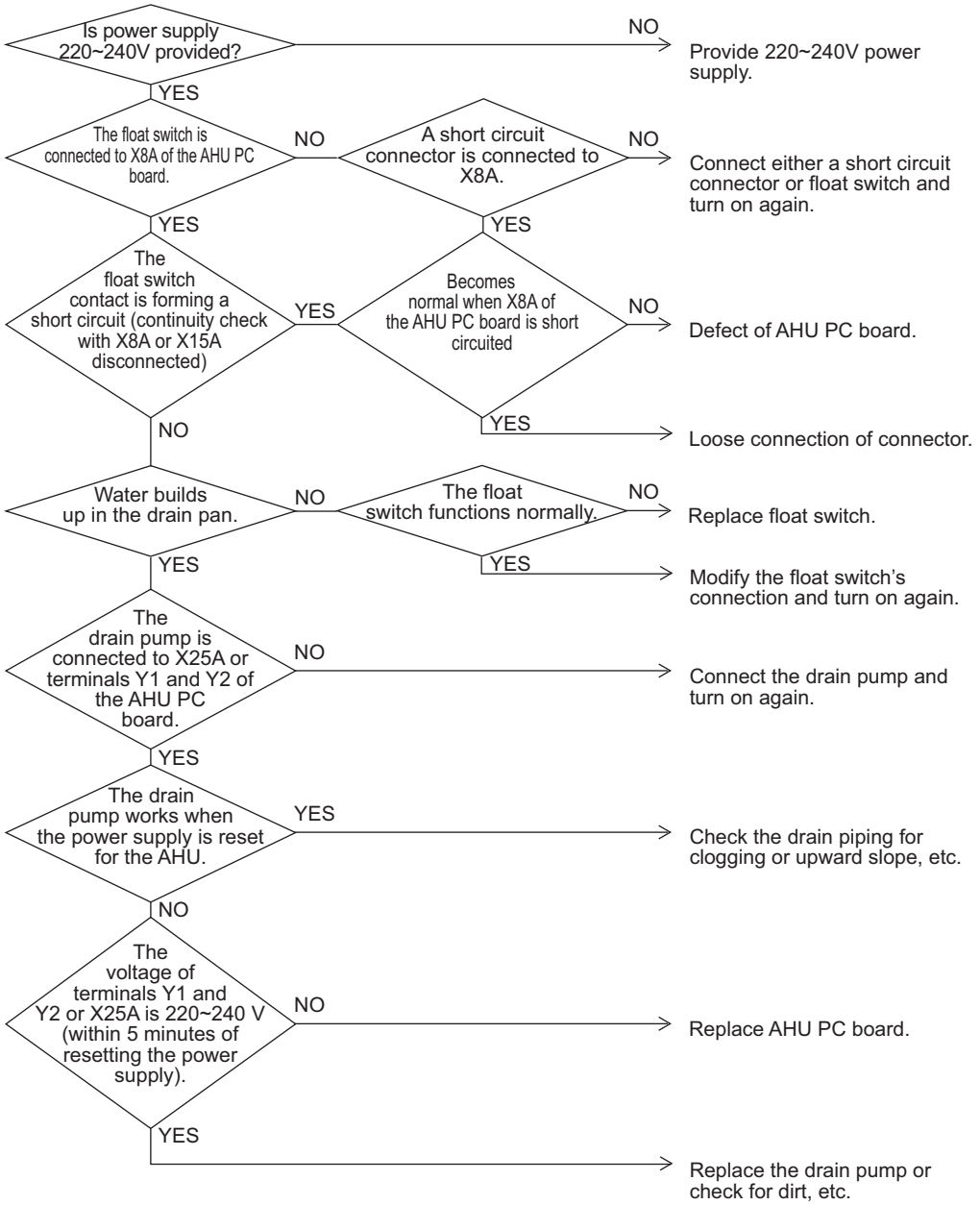

3.4 "A6" AHU: Fan Motor (M1F) Lock, Overload

Remote Control Display

A6

Applicable Models

All AHUs

Method of Malfunction Detection

Detection by failure of signal for detecting number of turns to come from the fan motor

Malfunction Decision Conditions

When number of turns can't be detected even when output voltage to the fan is maximum

Supposed Causes

- Fan motor lock
- Disconnected or faulty wiring between fan motor and PC board

Troubleshooting

Caution Be sure to turn off power switch before connect or disconnect connector, or parts damage may be occurred.

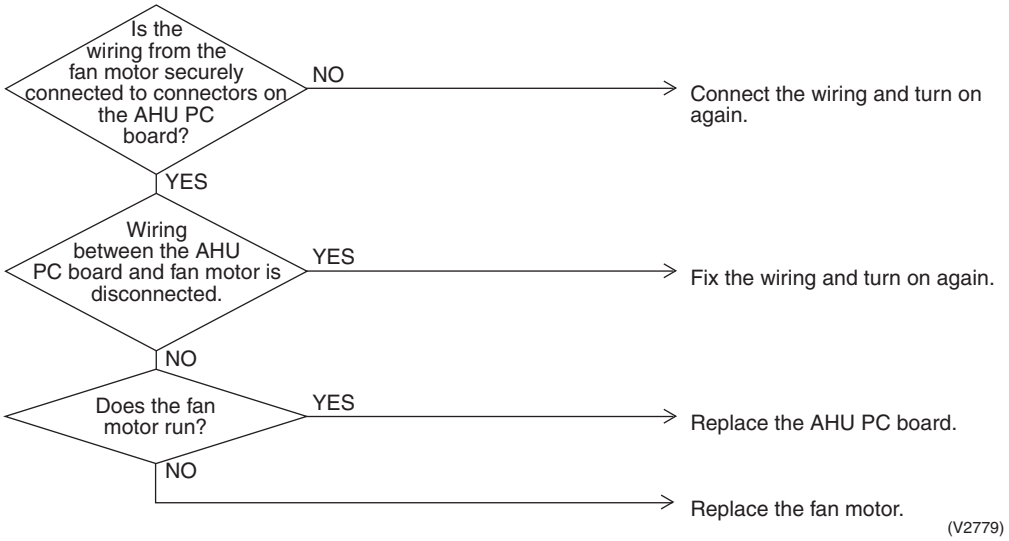

3.5 "A9" AHU: Malfunction of Moving Part of Electronic Expansion Valve (Y1E)

Remote Control Display

A9

Applicable Models

All AHU models

Method of Malfunction Detection

Use a microcomputer to check the electronic expansion valve for coil conditions.

Malfunction Decision Conditions

When the pin input of the electronic expansion valve is not normal while in the initialization of the microcomputer.

Supposed Causes

- Malfunction of moving part of electronic expansion valve
- Defect of AHU PC board
- Defect of connecting cable

Troubleshooting

Caution Be sure to turn off power switch before connect or disconnect connector, or parts damage may be occurred.

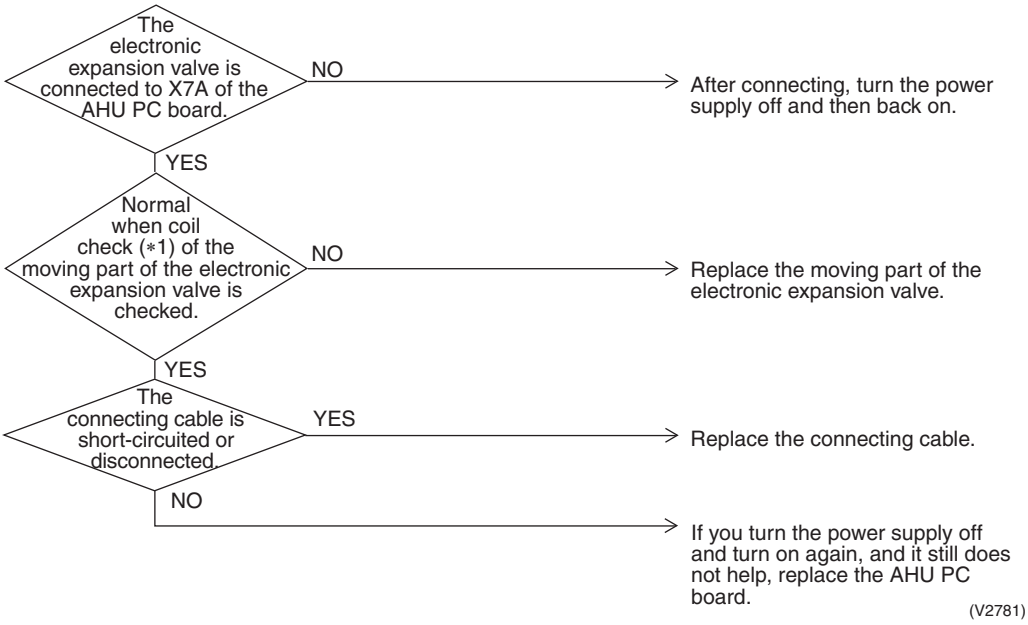

∗1: Coil check method for the moving part of the electronic expansion valve
Disconnect the electronic expansion valve from the PC board and check the continuity between the connector pins.

(Normal)

Pin No.	1. White	2. Yellow	3. Orange	4. Blue	5. Red	6. Brown
1. White		×	○ Approx. 300Ω	×	○ Approx. 150Ω	×
2. Yellow			×	○ Approx. 300Ω	×	○ Approx. 150Ω
3. Orange				×	○ Approx. 150Ω	×
4. Blue					×	○ Approx. 150Ω
5. Red						×
6. Brown						

○: Continuity
×: No continuity

3.6 "AF" AHU: Drain Level above Limit

Remote Control Display

AF

Applicable Models

AHU

Method of Malfunction Detection

Water leakage is detected based on float switch ON/OFF operation while the compressor is in non-operation.

Malfunction Decision Conditions

When the float switch changes from ON to OFF while the compressor is in non-operation.

Supposed Causes

- Humidifier unit (optional accessory) leaking
- Defect of drain pipe (upward slope, etc.)
- Defect of AHU PC board

Troubleshooting

Caution Be sure to turn off power switch before connect or disconnect connector, or parts damage may be occurred.

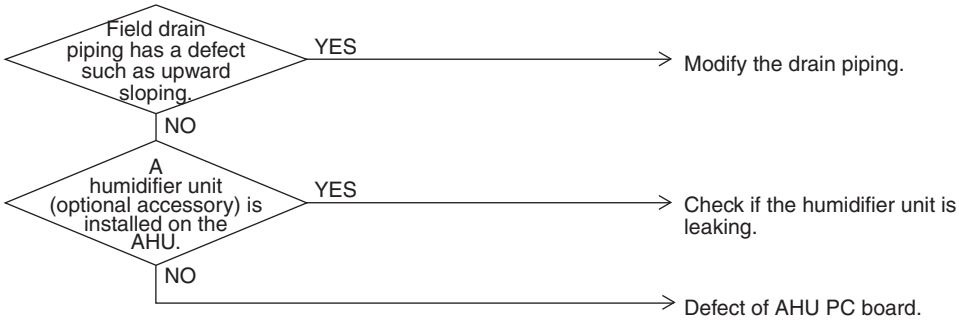

(V2782)

3.7 "AJ" AHU: Malfunction of Capacity Determination Device

Remote control display

AJ

Applicable Models

All AHU models

Method of Malfunction Detection

Capacity is determined according to resistance of the capacity setting adapter and the memory inside the IC memory on the AHU PC board, and whether the value is normal or abnormal is determined.

Malfunction Decision Conditions

Operation and:
When the capacity code is not contained in the PC board's memory, and the capacity setting adapter is not connected.

Supposed Causes

- You have forgotten to install the capacity setting adapter.
- Defect of AHU PC board

Troubleshooting

Caution Be sure to turn off power switch before connect or disconnect connector, or parts damage may be occurred.

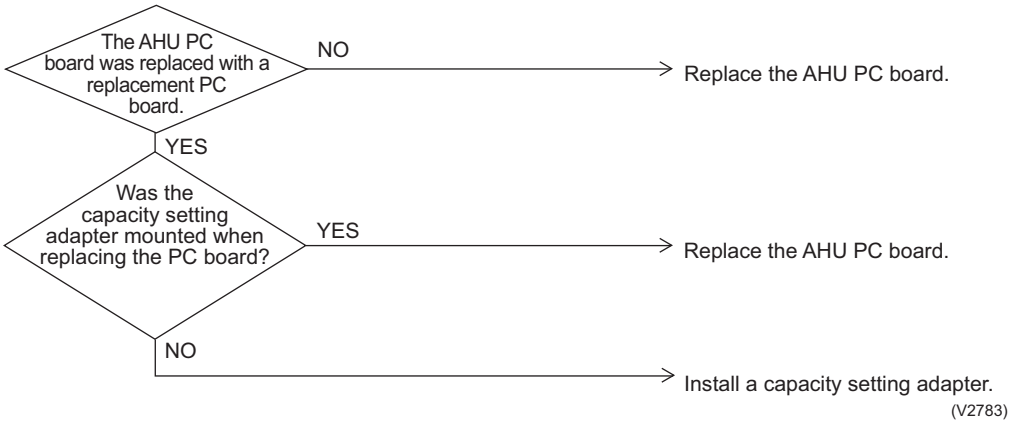

3.8 "C4" AHU: Malfunction of Thermistor (R2T) for Heat Exchanger

Remote Control Display

C4

Applicable Models

All AHU models

Method of Malfunction Detection

Malfunction detection is carried out by temperature detected by heat exchanger thermistor.

Malfunction Decision Conditions

When the heat exchanger thermistor becomes disconnected or shorted while the unit is running.

Supposed Causes

- Defect of thermistor (R2T) for liquid pipe
- Defect of AHU PC board

Troubleshooting

Caution Be sure to turn off power switch before connect or disconnect connector, or parts damage may be occurred.

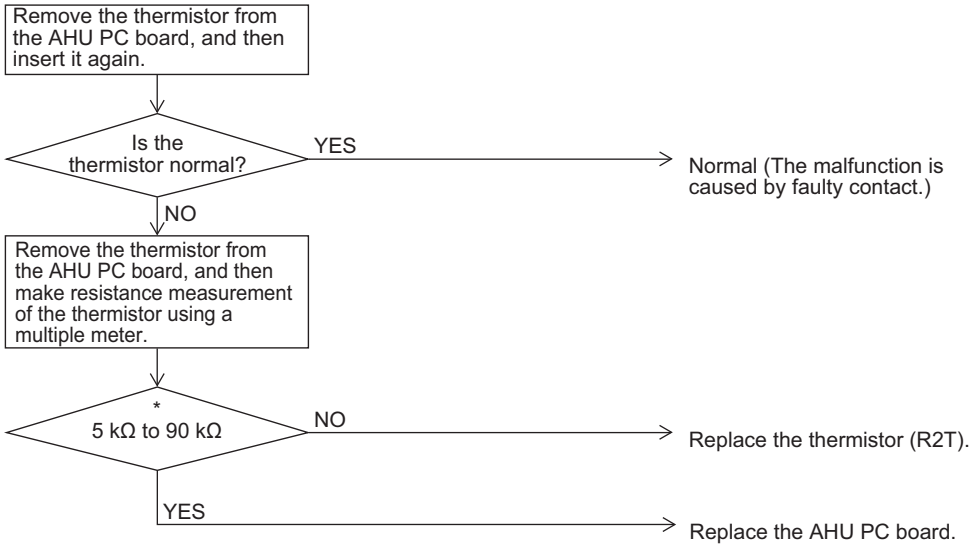

∗ Refer to "Thermistor Resistance / Temperature Characteristics" table on P270.

3.9 "C5" AHU: Malfunction of Thermistor (R3T) for Gas Pipes

Remote Control Display

C5

Applicable Models

All AHU models

Method of Malfunction Detection

Malfunction detection is carried out by temperature detected by gas pipe thermistor.

Malfunction Decision Conditions

When the gas pipe thermistor becomes disconnected or shorted while the unit is running.

Supposed Causes

- Defect of AHU thermistor (R3T) for gas pipe
- Defect of AHU PC board

Troubleshooting

Caution Be sure to turn off power switch before connect or disconnect connector, or parts damage may be occurred.

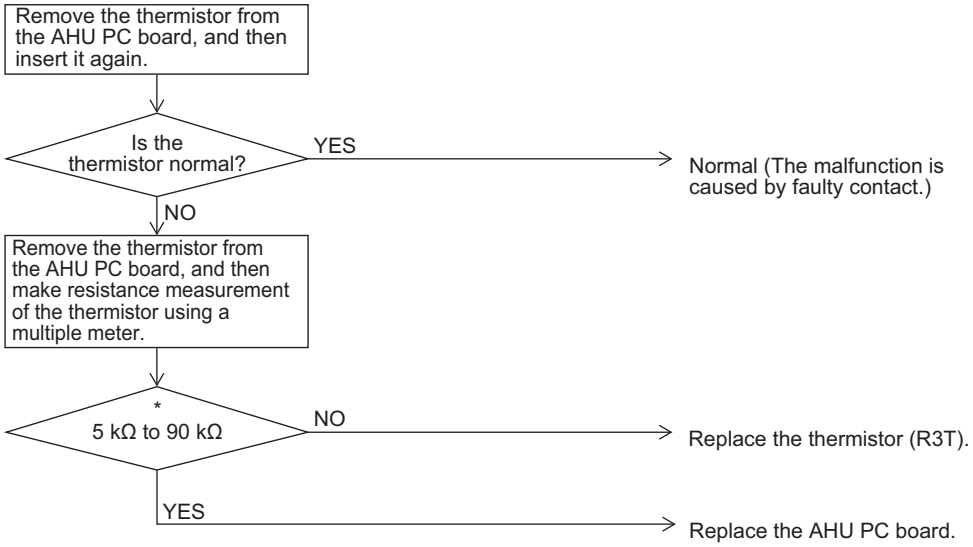

∗ Refer to "Thermistor Resistance / Temperature Characteristics" table on P270.

3.10 "C9" AHU: Malfunction of Thermistor (R1T) for Suction Air

Remote Control Display

C9

Applicable Models

All AHU models

Method of Malfunction Detection

Malfunction detection is carried out by temperature detected by suction air temperature thermistor.

Malfunction Decision Conditions

When the suction air temperature thermistor becomes disconnected or shorted while the unit is running.

Supposed Causes

- Defect of AHU thermistor (R1T) for air inlet
- Defect of AHU PC board

Troubleshooting

Caution: Be sure to turn off power switch before connect or disconnect connector, or parts damage may be occurred.

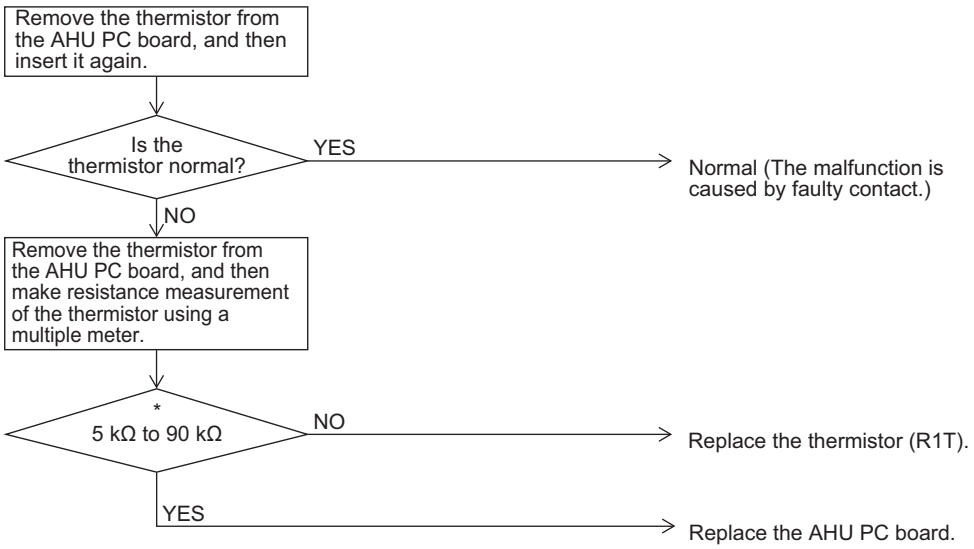

∗ Refer to "Thermistor Resistance / Temperature Characteristics" table on P270.

3.11 "CJ" AHU: Malfunction of Thermostat Sensor in Remote Control

Remote Control Display

CJ

Applicable Models

All AHU models

Method of Malfunction Detection

Malfunction detection is carried out by temperature detected by remote control air temperature thermistor. (Note:)

Malfunction Decision Conditions

When the remote control air temperature thermistor becomes disconnected or shorted while the unit is running.

Supposed Causes

- Defect of remote control thermistor
- Defect of remote control PC board

Troubleshooting

Caution Be sure to turn off power switch before connect or disconnect connector, or parts damage may be occurred.

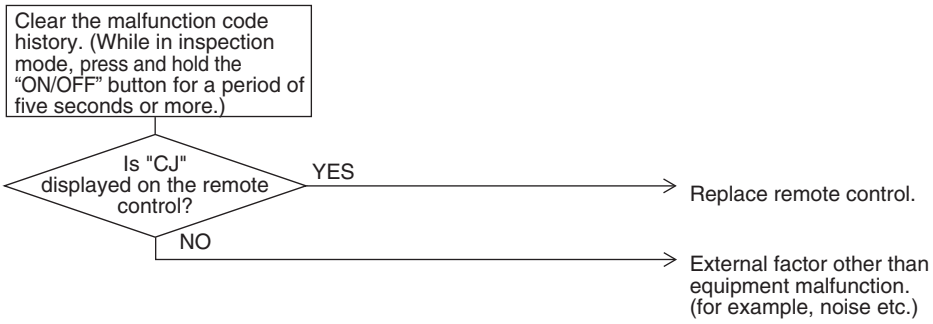

(V2787)

Note: In case of remote control thermistor malfunction, unit is still operable by suction air thermistor on AHU.

∗ Refer to "Thermistor Resistance / Temperature Characteristics" table on P270.

3.12 "E1" Outdoor Unit: PC Board Defect

Remote Control Display	E1
Applicable Models	ERQ 125 ~ 250 A7W1
Method of Malfunction Detection	Check data from E²PROM
Malfunction Decision Conditions	When data could not be correctly received from the E²PROM E²PROM: Type of nonvolatile memory. Maintains memory contents even when the power supply is turned off.
Supposed Causes	■ Defect of outdoor unit PC board (A1P)

Troubleshooting

Caution Be sure to turn off power switch before connect or disconnect connector, or parts damage may be occurred.

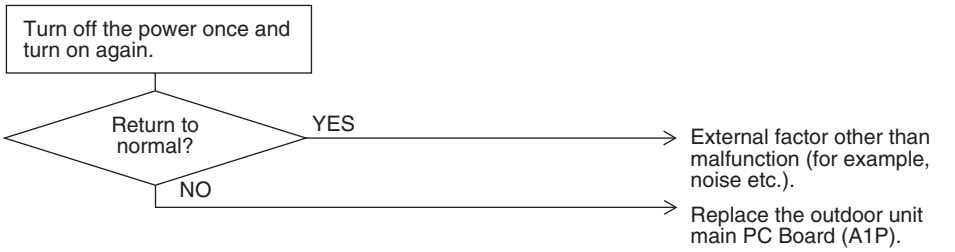

(V3064)

3.13 "E3" Outdoor Unit: Actuation of High Pressure Switch

Remote Control Display	E3
Applicable Models	ERQ 125 ~ 250 A7W1
Method of Malfunction Detection	Abnormality is detected when the contact of the high pressure protection switch opens.
Malfunction Decision Conditions	Error is generated when the HPS activation count reaches the number specific to the operation mode. (Reference) Operating pressure of high pressure switch Operating pressure: 4.0MPa Reset pressure: 2.85MPa
Supposed Causes	■ Actuation of outdoor unit high pressure switch ■ Defect of High pressure switch ■ Defect of outdoor unit PC board ■ Instantaneous power failure ■ Faulty high pressure sensor

Troubleshooting

Caution: Be sure to turn off power switch before connect or disconnect connector, or parts damage may be occurred.

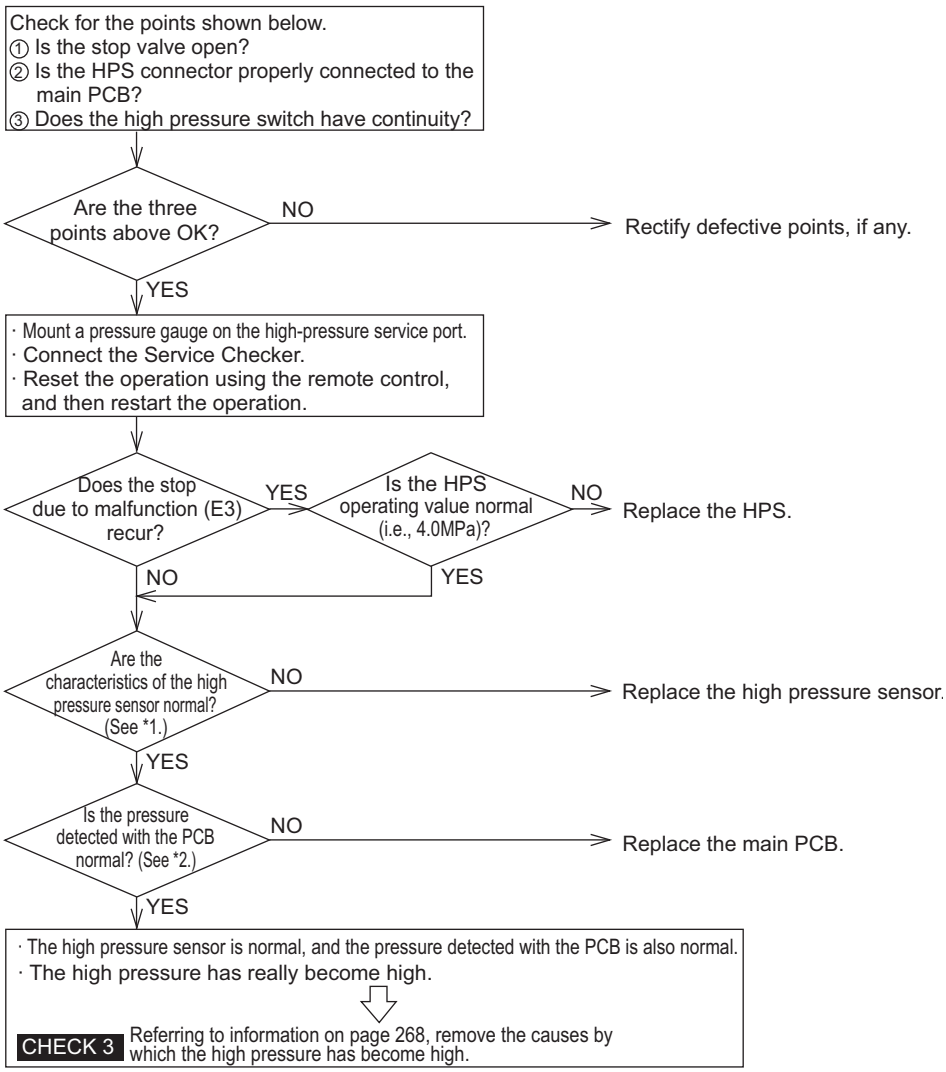

*1: Make a comparison between the voltage of the pressure sensor and that read by the pressure gauge.
(As to the voltage of the pressure sensor, make measurement of voltage at the connector, and then convert it to pressure according to information on “Pressure Sensor”.)

*2: Make a comparison between the high pressure value checked with the Service Checker and the voltage of the pressure sensor (see *1).

*3: Make measurement of voltage of the pressure sensor.

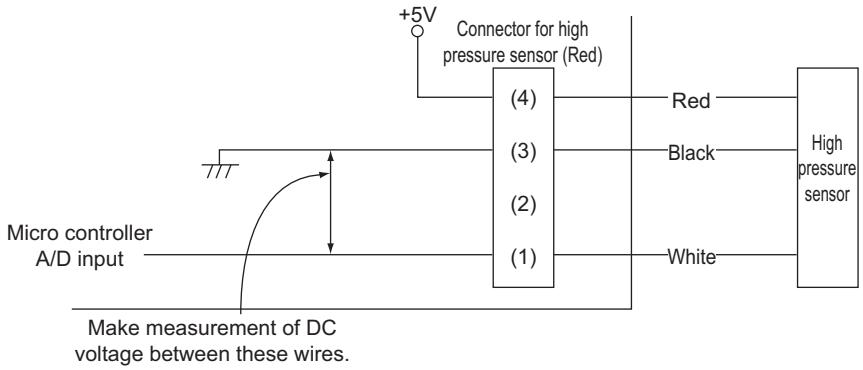

3.14 "E4" Outdoor Unit: Actuation of Low Pressure Sensor

Remote Control Display	E4
Applicable Models	ERQ 125 ~ 250 A7W1
Method of Malfunction Detection	Abnormality is detected by the pressure value with the low pressure sensor.
Malfunction Decision Conditions	Error is generated when the low pressure is dropped under specific pressure. Operating pressure:0.07MPa
Supposed Causes	■ Abnormal drop of low pressure (Lower than 0.07MPa) ■ Defect of low pressure sensor ■ Defect of outdoor unit PC board ■ Stop valve is not opened.

Troubleshooting

Caution Be sure to turn off power switch before connect or disconnect connector, or parts damage may be occurred.

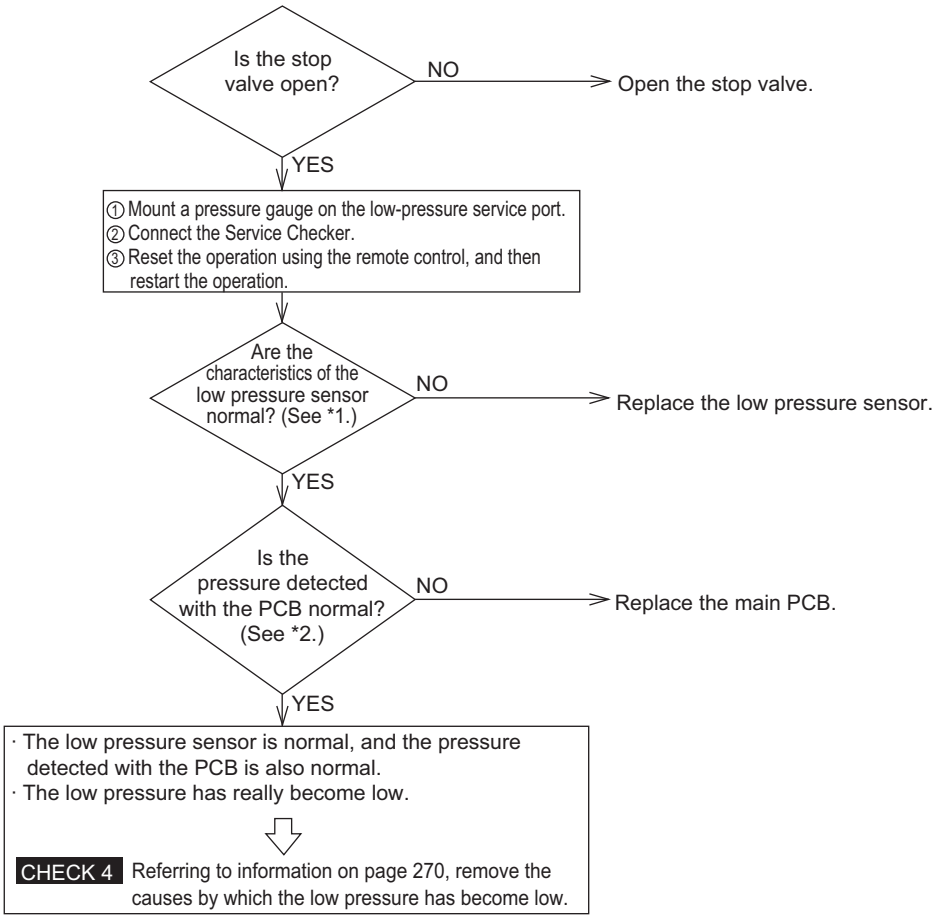

*1: Make a comparison between the voltage of the pressure sensor and that read by the pressure gauge.
(As to the voltage of the pressure sensor, make measurement of voltage at the connector, and then convert it to pressure according to information on “Pressure Sensor”.)
*2: Make a comparison between the low pressure value checked with the Service Checker and the voltage of the pressure sensor (see *1).
*3: Make measurement of voltage of the pressure sensor.

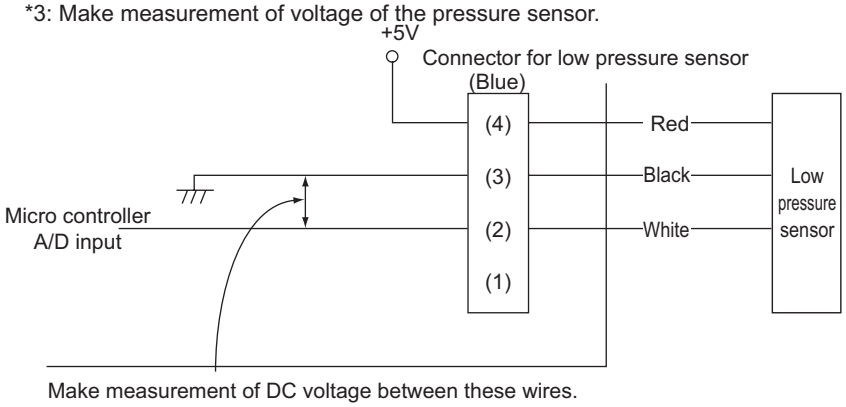

3.15 "E5" Outdoor Unit: Inverter Compressor Motor Lock

Remote Control Display	E5
Applicable Models	ERQ 125 ~ 250 A7W1
Method of Malfunction Detection	Inverter PC board takes the position signal from UVW line connected between the inverter and compressor, and the malfunction is detected when any abnormality is observed in the phase-current waveform.
Malfunction Decision Conditions	This malfunction will be output when the inverter compressor motor does not start up even in forced startup mode.
Supposed Causes	■ Inverter compressor lock ■ High differential pressure (0.5MPa or more) ■ Incorrect UVW wiring ■ Faulty inverter PC board ■ Stop valve is left in closed.

Troubleshooting

Caution: Be sure to turn off power switch before connect or disconnect connector, or parts damage may be occurred.

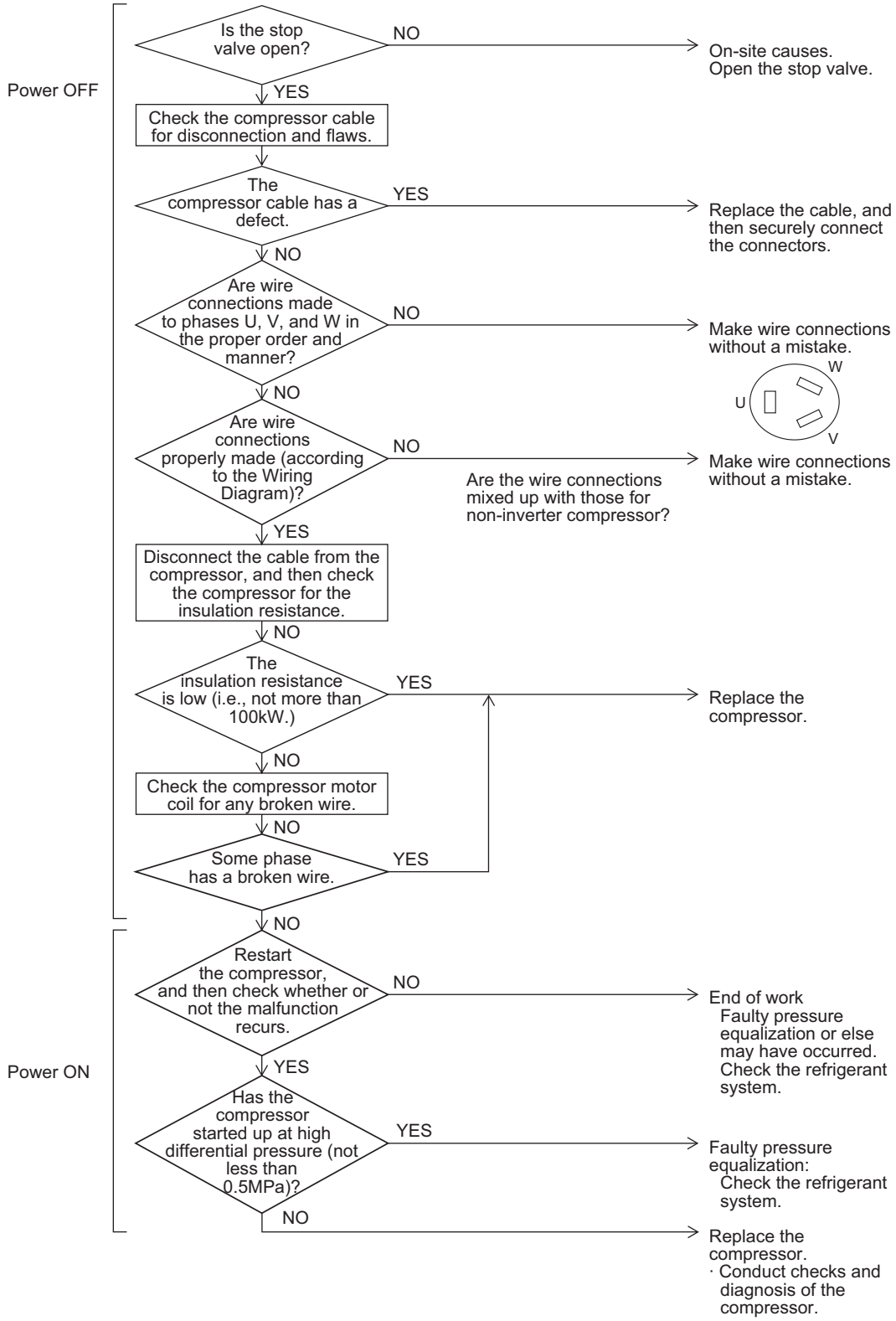

3.16 "E6" Outdoor Unit: STD Compressor Motor Overcurrent/ Lock

Remote Control Display

E6

Applicable Models

ERQ 125 ~ 250 A7W1

Method of Malfunction Detection

Detects the overcurrent with current sensor (CT).

Malfunction Decision Conditions

Malfunction is decided when the detected current value exceeds the below mentioned value for 2 seconds.

- 400 V unit: 15.0 A

Supposed Causes

- Closed stop value
- Obstacles at the air outlet
- Improper power voltage
- Faulty magnetic switch
- Faulty compressor
- Faulty current sensor (A6P, A7P)

Troubleshooting

Caution Be sure to turn off power switch before connect or disconnect connector, or parts damage may be occurred.

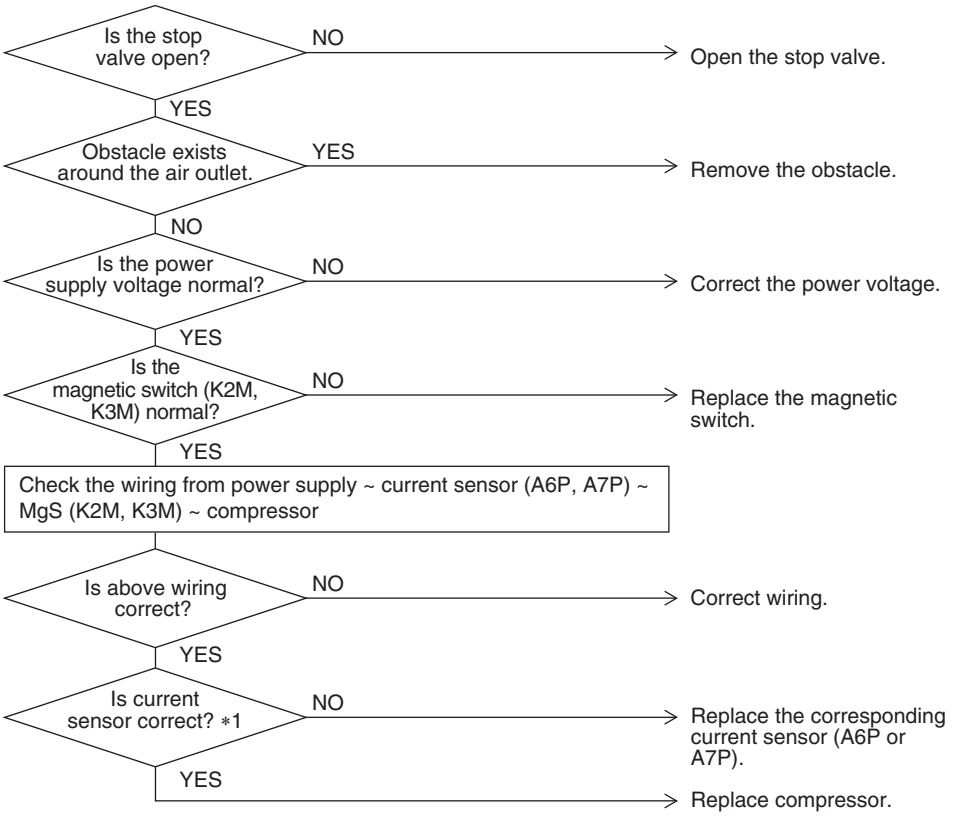

(V3051)

Note: *1 Abnormal case

- The current sensor value is 0 during STD compressor operation.
- The current sensor value is more than 15.0A during STD compressor stop.

3.17 "E7" Outdoor Unit: Malfunction of Outdoor Unit Fan Motor

Remote Control Display	E7
Applicable Models	ERQ 125 ~ 250 A7W1
Method of Malfunction Detection	Malfunction of fan motor system is detected according to the fan speed detected by hall IC when the fan motor runs.
Malfunction Decision Conditions	■ When the fan runs with speed less than a specified one for 6 seconds or more when the fan motor running conditions are met ■ When connector detecting fan speed is disconnected ■ When malfunction is generated 4 times, the system shuts down.
Supposed Causes	■ Malfunction of fan motor ■ The harness connector between fan motor and PC board is left in disconnected, or faulty connector ■ Fan does not run due to foreign matters tangled ■ Clearing condition: Operate for 5 minutes (normal)

Troubleshooting

Caution Be sure to turn off power switch before connect or disconnect connector, or parts damage may be occurred.

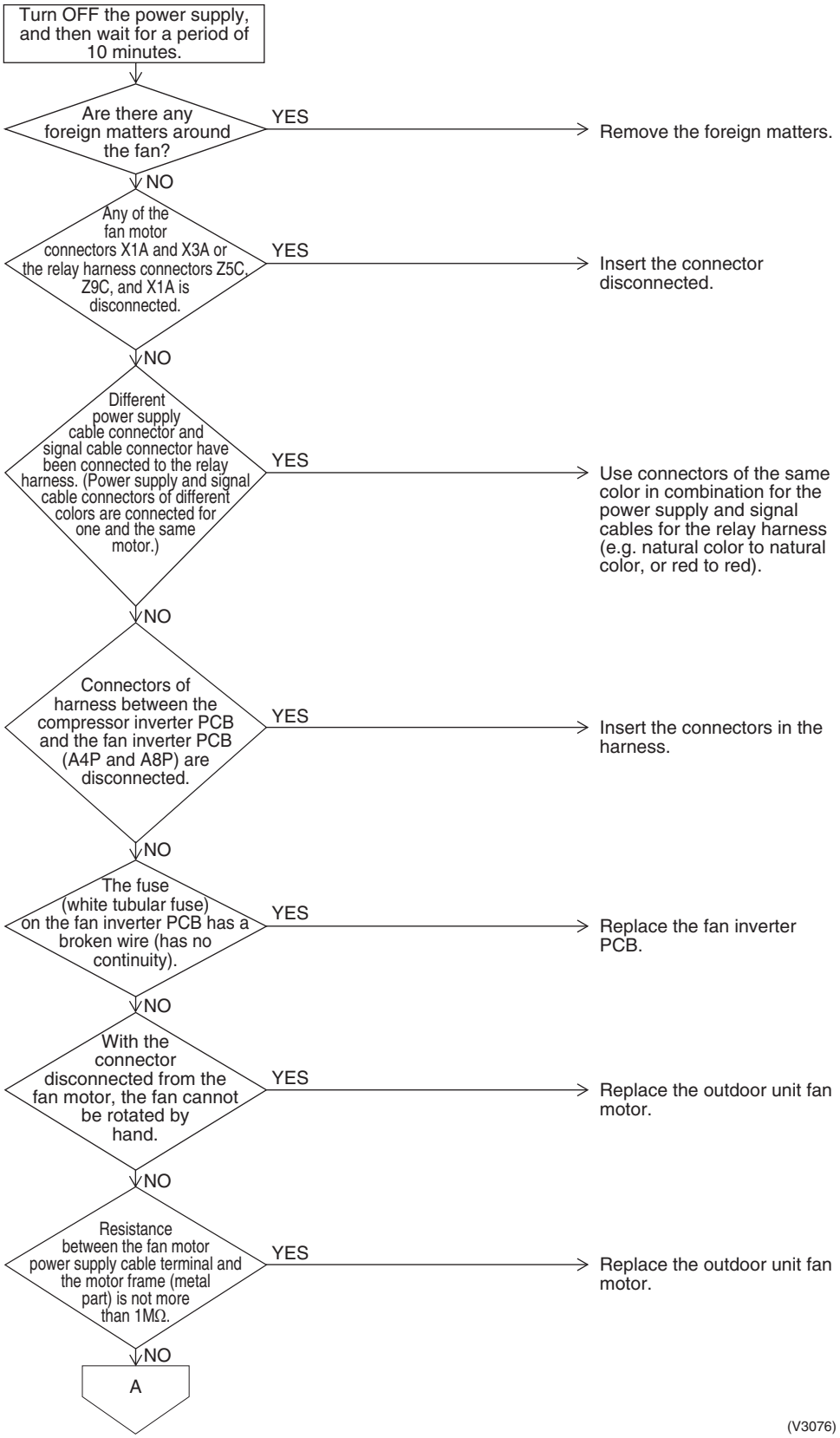

Troubleshooting

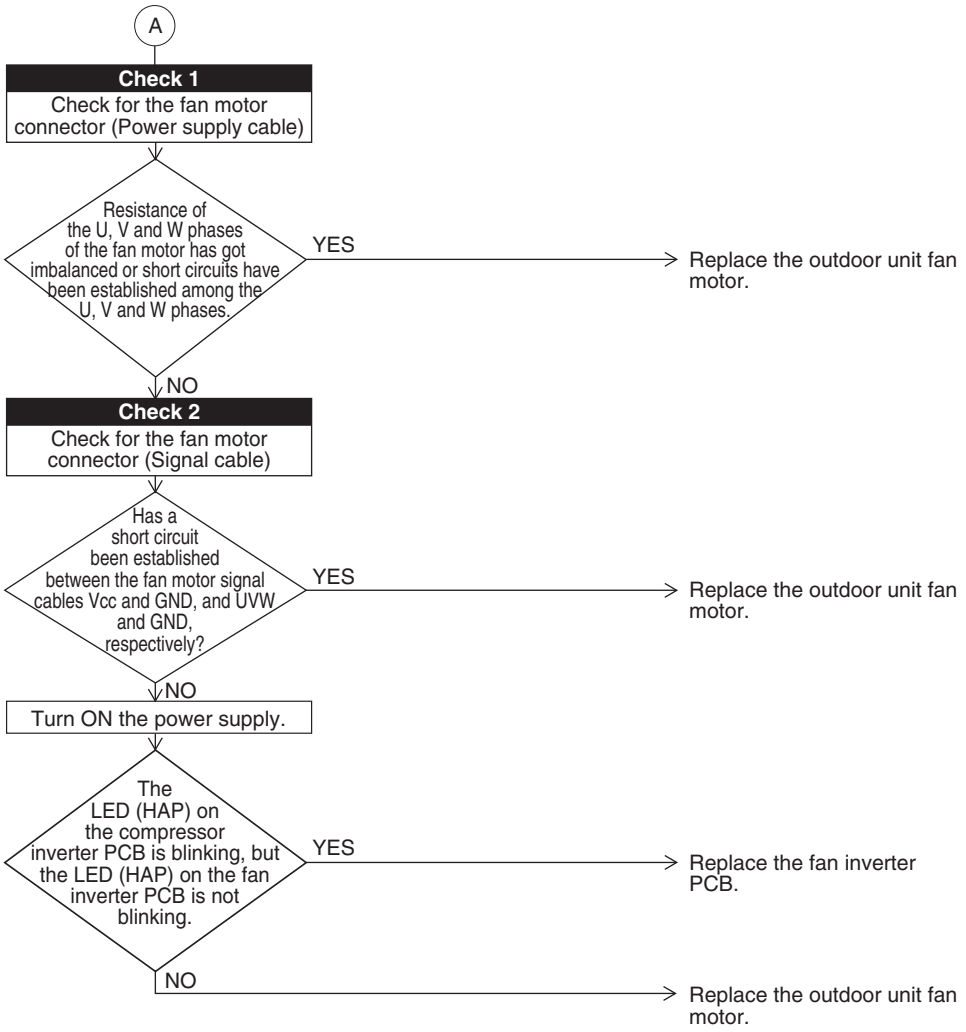

(V3077)

Note: Refer check 1 and 2 to P.255.

3.18 "E9" Outdoor Unit: Malfunction of Moving Part of Electronic Expansion Valve (Y1E, Y2E)

Remote Control Display	E9
Applicable Models	ERQ 125 ~ 250 A7W1
Method of Malfunction Detection	Check disconnection of connector Check continuity of expansion valve coil
Malfunction Decision Conditions	Error is generated under no common power supply when the power is on.
Supposed Causes	■ Defect of moving part of electronic expansion valve ■ Defect of outdoor unit PC board (A1P) ■ Defect of connecting cable

Troubleshooting

Caution Be sure to turn off power switch before connect or disconnect connector, or parts damage may be occurred.

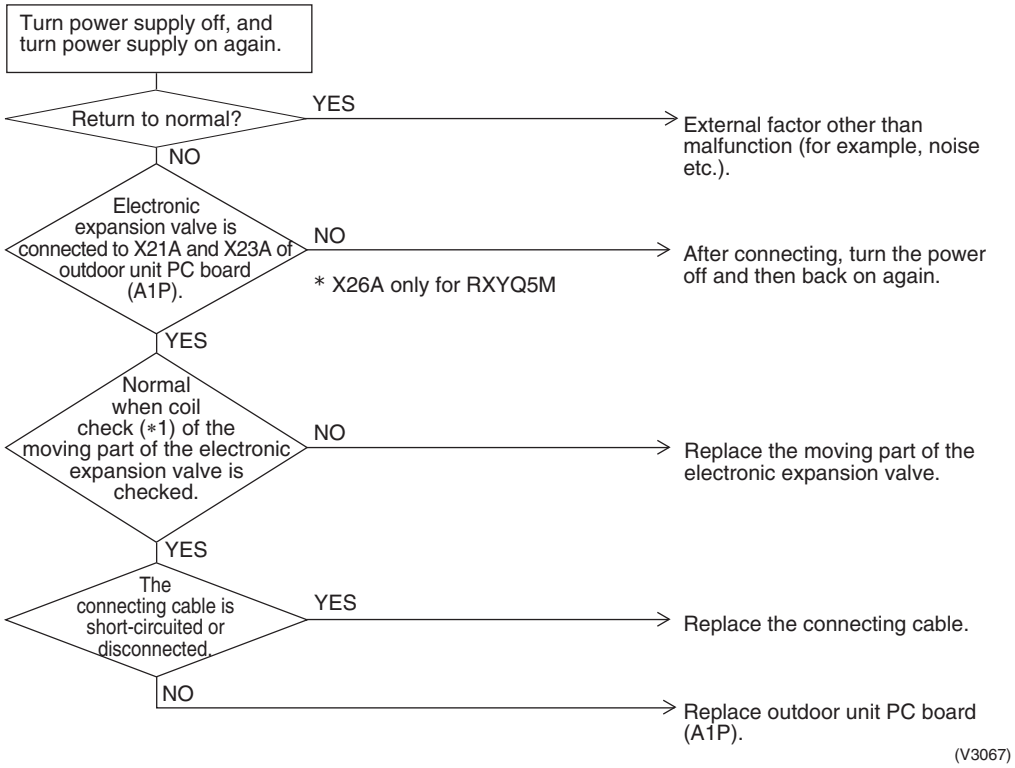

*Make measurement of resistance between the connector pins, and then make sure the resistance falls in the range of 40 to 50Ω.

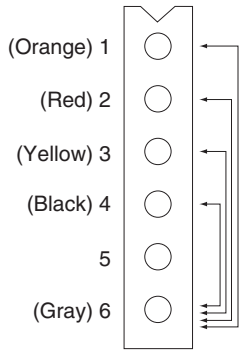

Measuring points
1 - 6
2 - 6
3 - 6
4 - 6

(V3067)

3.19 "F3" Outdoor Unit: Abnormal Discharge Pipe Temperature

Remote Control Display

F3

Applicable Models

ERQ 125 ~ 250 A7W1

Method of Malfunction Detection

Abnormality is detected according to the temperature detected by the discharge pipe temperature sensor.

Malfunction Decision Conditions

When the discharge pipe temperature rises to an abnormally high level
When the discharge pipe temperature rises suddenly

Supposed Causes

- Faulty discharge pipe temperature sensor
- Faulty connection of discharge pipe temperature sensor
- Faulty outdoor unit PC board

Troubleshooting

Caution Be sure to turn off power switch before connect or disconnect connector, or parts damage may be occurred.

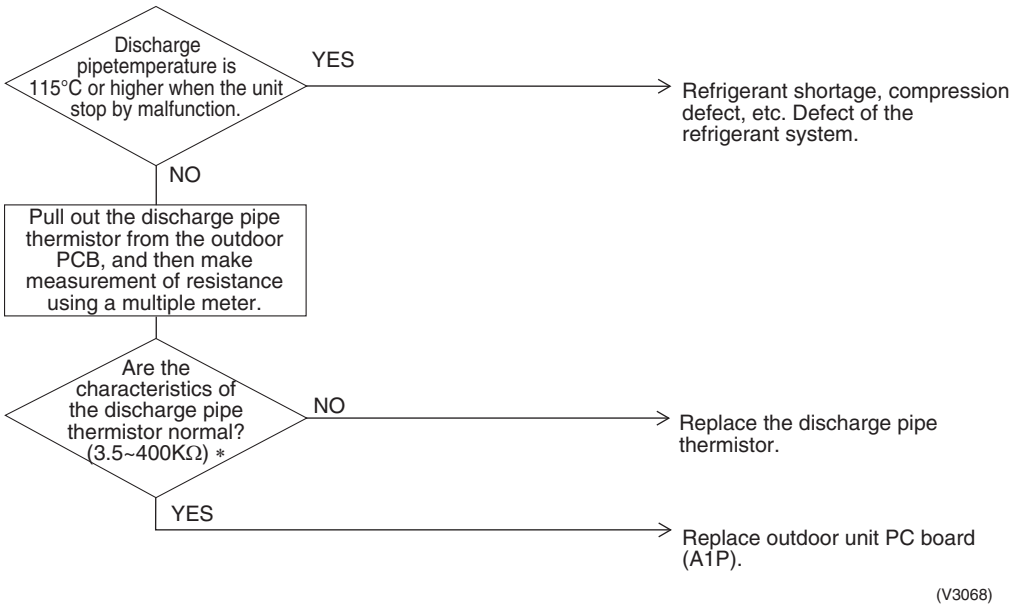

* Refer to "Thermistor Resistance / Temperature Characteristics" table on P270.

3.20 "F6" Outdoor Unit: Refrigerant Overcharged

Remote Control Display

F6

Applicable Models

ERQ 125 ~ 250 A7W1

Method of Malfunction Detection

Excessive charging of refrigerant is detected by using the outside air temperature, heat exchanging deicer temperature and liquid pipe temperature during a check run.

Malfunction Decision Conditions

When the amount of refrigerant, which is calculated by using the outside air temperature, heat exchanging deicer temperature and liquid pipe temperature during a check run, exceeds the standard.

Supposed Causes

- Refrigerant overcharge
- Misalignment of the outside air thermistor
- Misalignment of the heat exchanging deicer thermistor
- Misalignment of the liquid pipe thermistor

Troubleshooting

Caution Be sure to turn off power switch before connect or disconnect connector, or parts damage may be occurred.

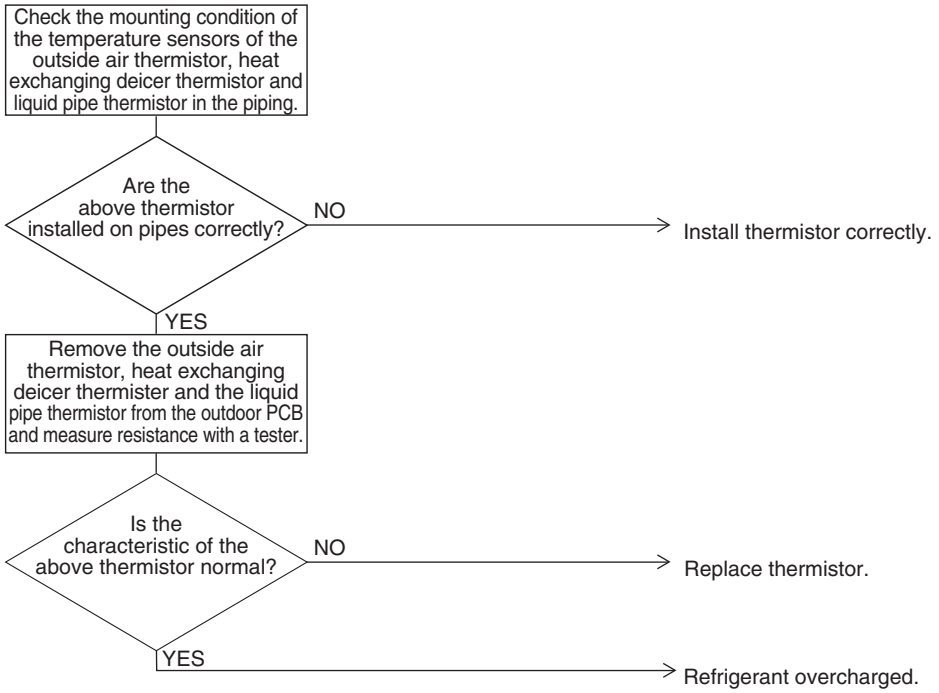

(V2797)

∗ Refer to "Thermistor Resistance / Temperature Characteristics" table on P270.

3.21 "H7" Outdoor Unit: Abnormal Outdoor Fan Motor Signal

Remote Control Display

H7

Applicable Models

ERQ 125 ~ 250 A7W1

Method of Malfunction Detection

Detection of abnormal signal from fan motor.

Malfunction Decision Conditions

In case of detection of abnormal signal at starting fan motor.

Supposed Causes

- Abnormal fan motor signal (circuit malfunction)
- Broken, short or disconnection connector of fan motor connection cable
- Fan Inverter PC board malfunction

Troubleshooting

Caution Be sure to turn off power switch before connect or disconnect connector, or parts damage may be occurred.

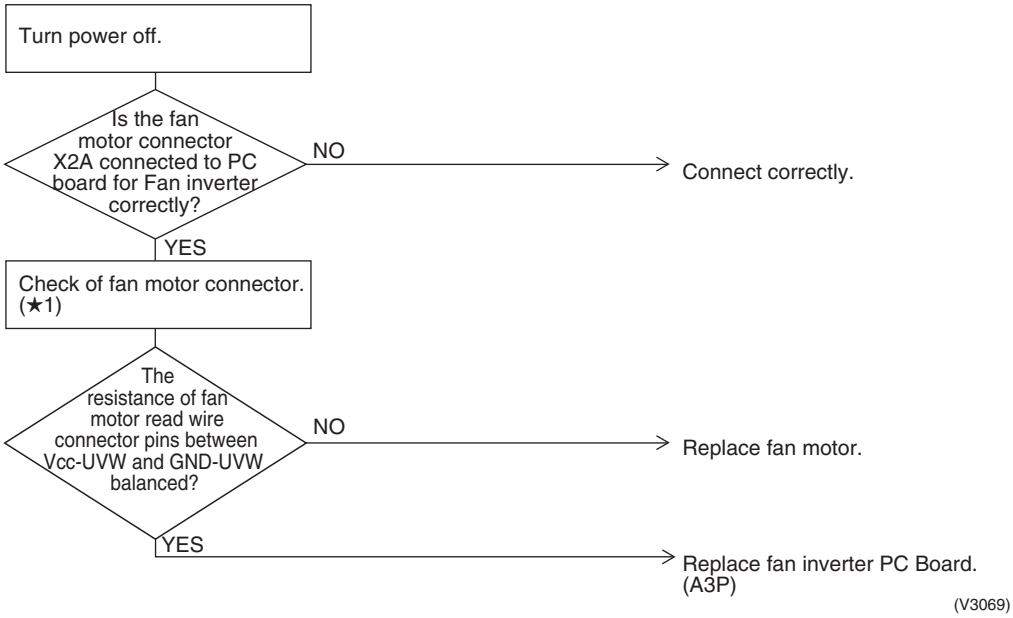

★1: Disconnect connector (X2A) and measure the following resistance.

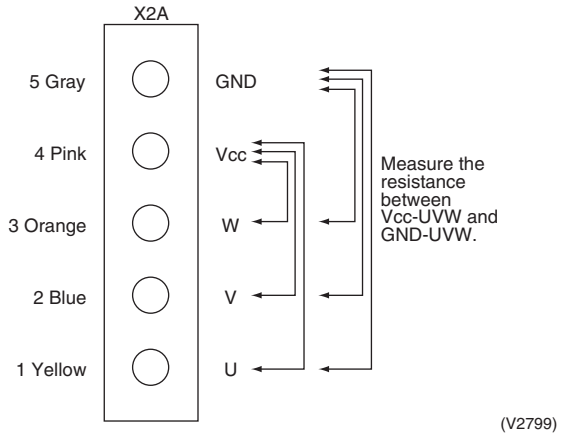

3.22 "H9" Outdoor Unit: Malfunction of Thermistor (R1T) for Outdoor Air

Remote Control Display

H9

Applicable Models

ERQ 125 ~ 250 A7W1

Method of Malfunction Detection

Malfunction is detected from the temperature detected by the outdoor air thermistor.

Malfunction Decision Conditions

When the outside air temperature thermistor has short circuit or open circuit.

Supposed Causes

- Defect of thermistor (R1T) for outdoor air
- Defect of outdoor unit PC board (A1P)

Troubleshooting

Caution Be sure to turn off power switch before connect or disconnect connector, or parts damage may be occurred.

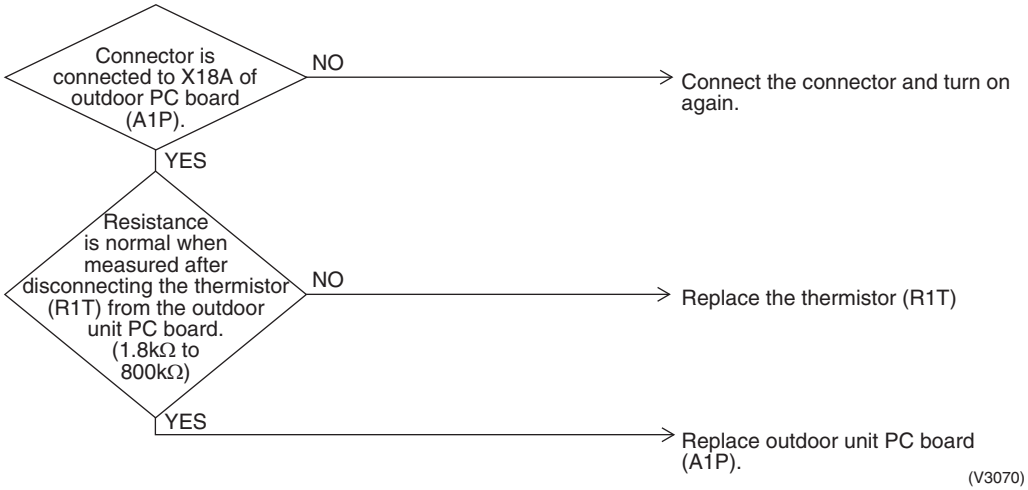

∗ Refer to "Thermistor Resistance / Temperature Characteristics" table on P270.

3.23 "J2" Outdoor Unit: Current Sensor Malfunction

Remote Control Display

J2

Applicable Models

ERQ 125 ~ 250 A7W1

Method of Malfunction Detection

Malfunction is detected according to the current value detected by current sensor.

Malfunction Decision Conditions

When the current value detected by current sensor becomes 5A or lower, or 40A or more during standard compressor operation.

Supposed Causes

- Faulty current sensor (A6P, A7P)
- Faulty outdoor unit PC board

Troubleshooting

Caution Be sure to turn off power switch before connect or disconnect connector, or parts damage may be occurred.

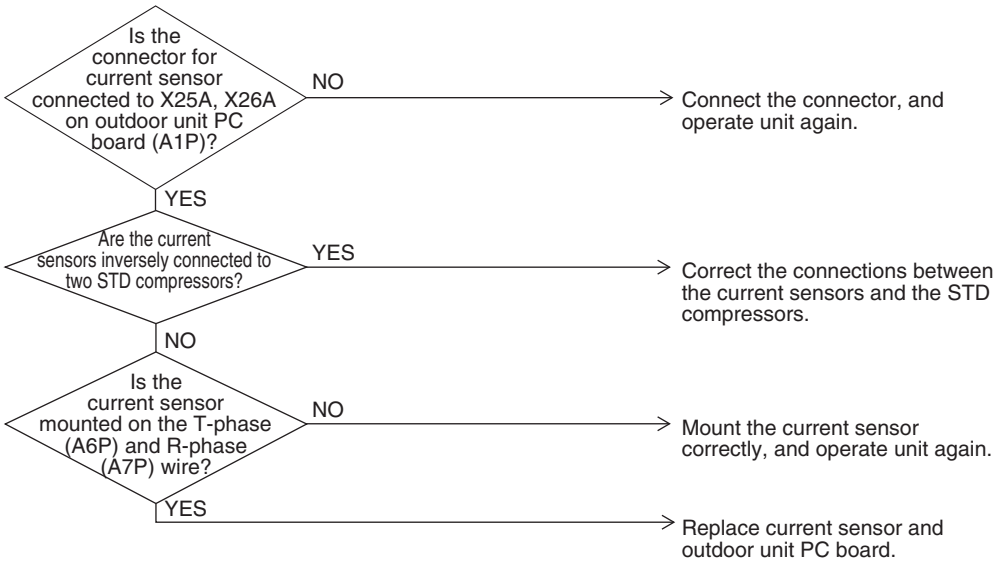

(V3071)

3.24 "J3" Outdoor Unit: Malfunction of Discharge Pipe Thermistor (R3, R31~33T)

Remote Control Display

J3

Applicable Models

ERQ 125 ~ 250 A7W1

Method of Malfunction Detection

Malfunction is detected from the temperature detected by discharge pipe temperature thermistor.

Malfunction Decision Conditions

When a short circuit or an open circuit in the discharge pipe temperature thermistor is detected.

Supposed Causes

- Defect of thermistor (R31T, R32T or R33T) for outdoor unit discharge pipe
- Defect of outdoor unit PC board (A1P)
- Defect of thermistor connection

Troubleshooting

Caution Be sure to turn off power switch before connect or disconnect connector, or parts damage may be occurred.

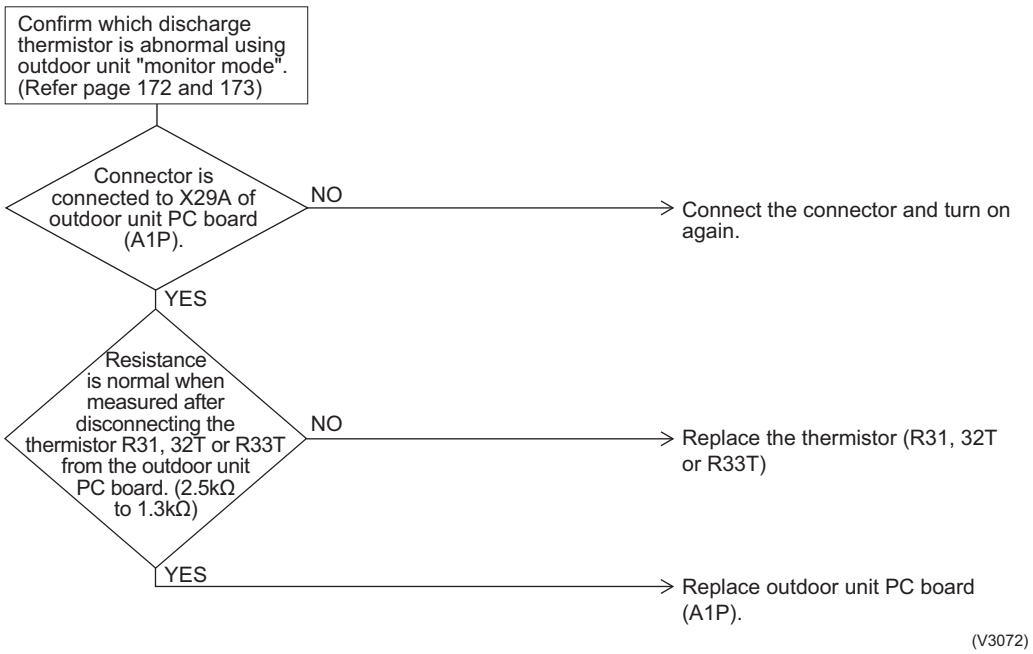

The alarm indicator is displayed when the fan is being used also.

Note: 5 HP class ··· R3T
8~12 HP class ··· R31T, R32T
14, 16Hp class ··· R31T, R32T and R33T

∗ Refer to "Thermistor Resistance / Temperature Characteristics" table on P270.

3.25 "J5" Outdoor Unit: Malfunction of Thermistor (R2T), (R7T) for Suction Pipe

Remote Control Display

J5

Applicable Models

ERQ 125 ~ 250 A7W1

Method of Malfunction Detection

Malfunction is detected from the temperature detected by the suction pipe temperature thermistor.

Malfunction Decision Conditions

When a short circuit or an open circuit in the suction pipe temperature thermistor is detected.

Supposed Causes

- Defect of thermistor (R2T), (R7T) for outdoor unit suction pipe
- Defect of outdoor unit PC board (A1P)
- Defect of thermistor connection

Troubleshooting

Caution Be sure to turn off power switch before connect or disconnect connector, or parts damage may be occurred.

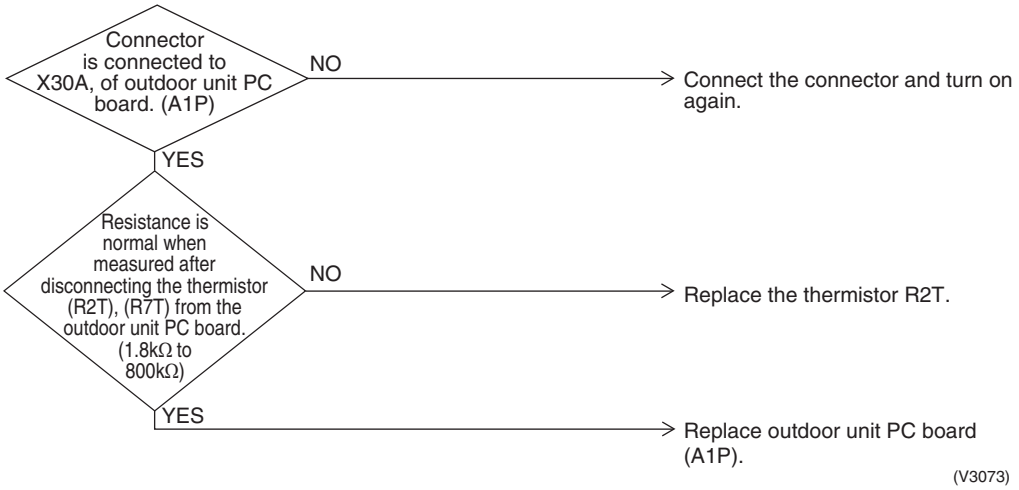

∗ Refer to "Thermistor Resistance / Temperature Characteristics" table on P270.

3.26 "J6" Outdoor Unit: Malfunction of Thermistor (R4T) for Outdoor Unit Heat Exchanger

Remote Control Display

J6

Applicable Models

ERQ 125 ~ 250 A7W1

Method of Malfunction Detection

Malfunction is detected from the temperature detected by the heat exchanger thermistor.

Malfunction Decision Conditions

When a short circuit or an open circuit in the heat exchange thermistor is detected.

Supposed Causes

- Defect of thermistor (R4T) for outdoor unit coil
- Defect of outdoor unit PC board (A1P)
- Defect of thermistor connection

Troubleshooting

Caution Be sure to turn off power switch before connect or disconnect connector, or parts damage may be occurred.

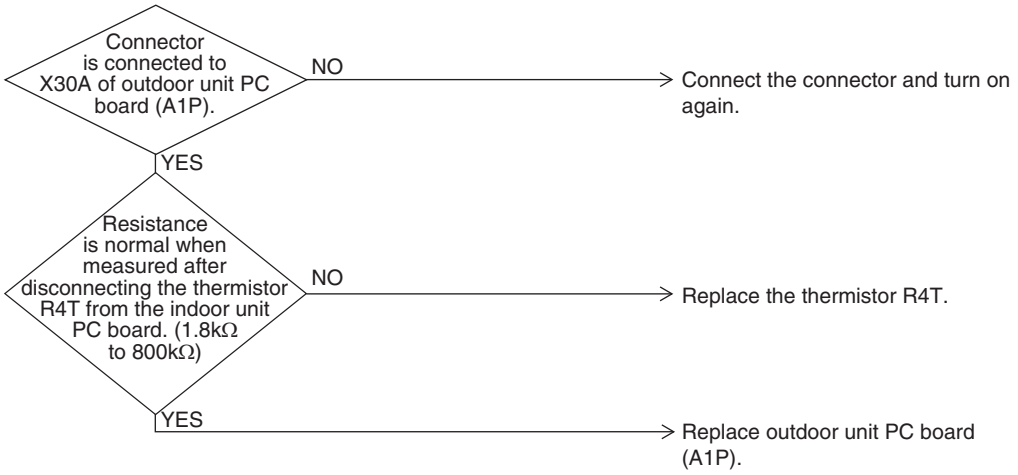

(V3074)

∗ Refer to "Thermistor Resistance / Temperature Characteristics" table on P270.

3.27 "J7" Outdoor Unit: Malfunction of Liquid Pipe Thermistor (R6T)

Remote Control Display

J7

Applicable Models

ERQ 125 ~ 250 A7W1

Method of Malfunction Detection

Malfunction is detected according to the temperature detected by liquid pipe thermistor.

Malfunction Decision Conditions

When the liquid pipe thermistor is short circuited or open.

Supposed Causes

- Faulty liquid pipe thermistor (R6T)
- Faulty outdoor unit PC board
- Defect of thermistor connection

Troubleshooting

Caution Be sure to turn off power switch before connect or disconnect connector, or parts damage may be occurred.

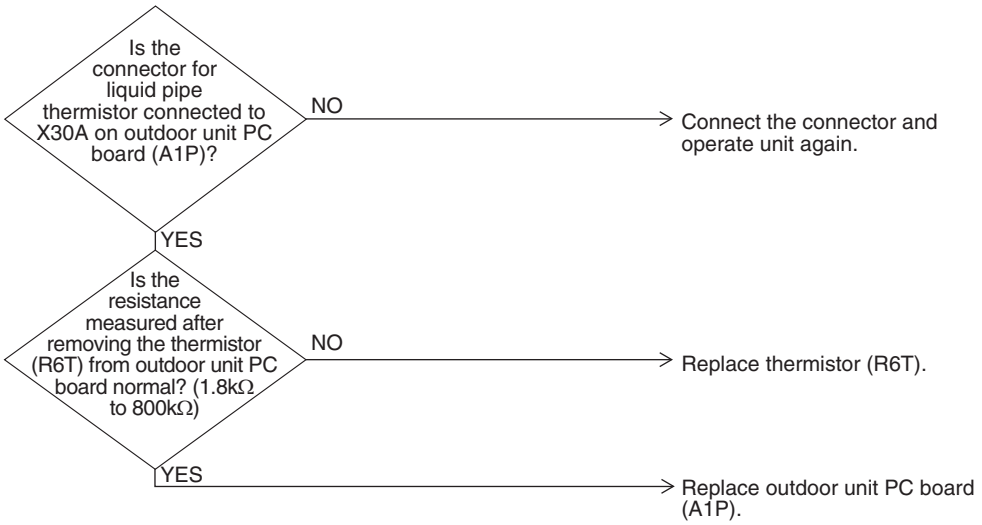

(V3075)

∗ Refer to "Thermistor Resistance / Temperature Characteristics" table on P270.

3.28 "J9" Outdoor Unit: Malfunction of Subcooling Heat Exchanger Gas Pipe Thermistor (R5T)

Remote Control Display

J9

Applicable Models

ERQ 125 ~ 250 A7W1

Method of Malfunction Detection

Malfunction is detected according to the temperature detected by subcooling heat exchanger gas pipe thermistor.

Malfunction Decision Conditions

When the subcooling heat exchanger gas pipe thermistor is short circuited or open.

Supposed Causes

- Faulty subcooling heat exchanger gas pipe thermistor (R5T)
- Faulty outdoor unit PC board

Troubleshooting

Caution Be sure to turn off power switch before connect or disconnect connector, or parts damage may be occurred.

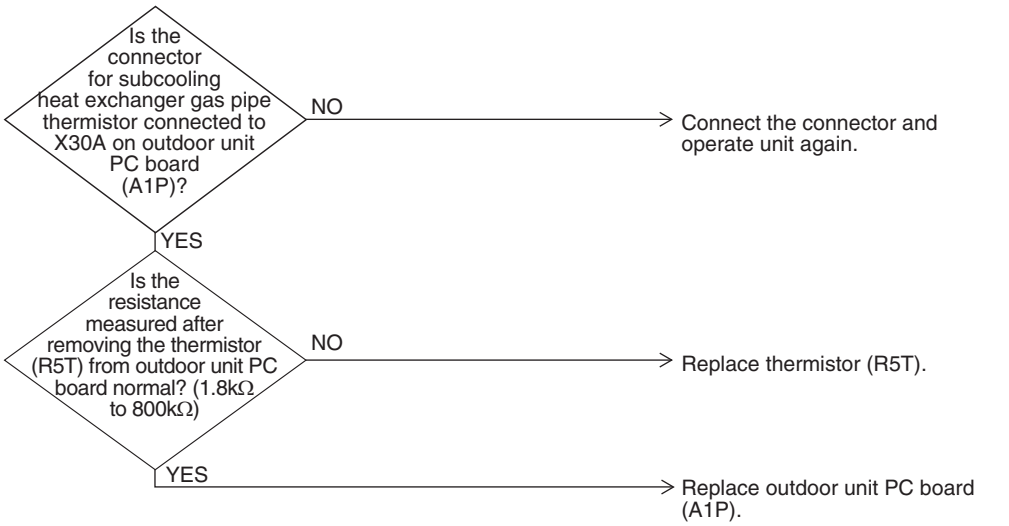

∗ Refer to "Thermistor Resistance / Temperature Characteristics" table on P270.

3.29 "JA" Outdoor Unit: Malfunction of High Pressure Sensor

Remote Control Display

JA

Applicable Models

ERQ 125 ~ 250 A7W1

Method of Malfunction Detection

Malfunction is detected from the pressure detected by the high pressure sensor.

Malfunction Decision Conditions

When the high pressure sensor is short circuit or open circuit.

Supposed Causes

- Defect of high pressure sensor system
- Connection of low pressure sensor with wrong connection.
- Defect of outdoor unit PC board.

Troubleshooting

Caution Be sure to turn off power switch before connect or disconnect connector, or parts damage may be occurred.

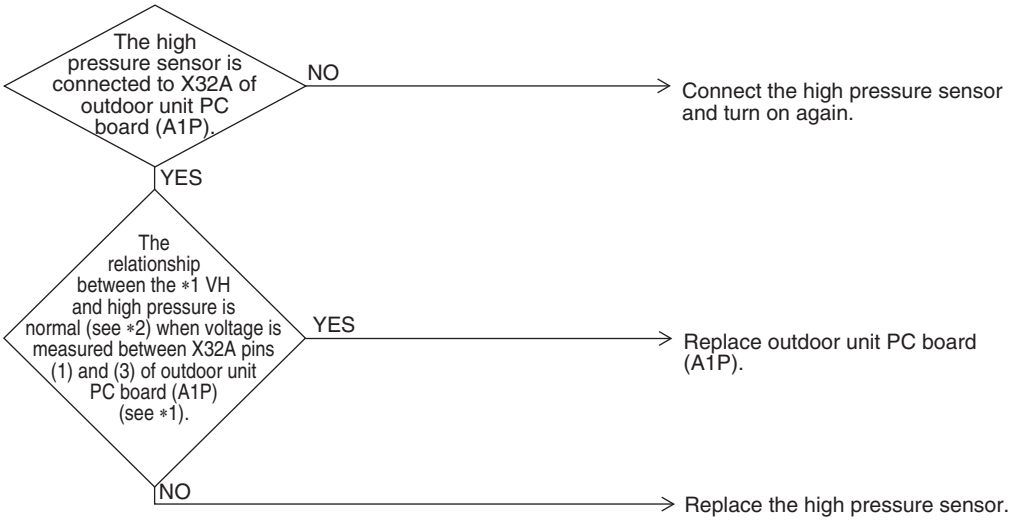

(V2806)

∗1: Voltage measurement point

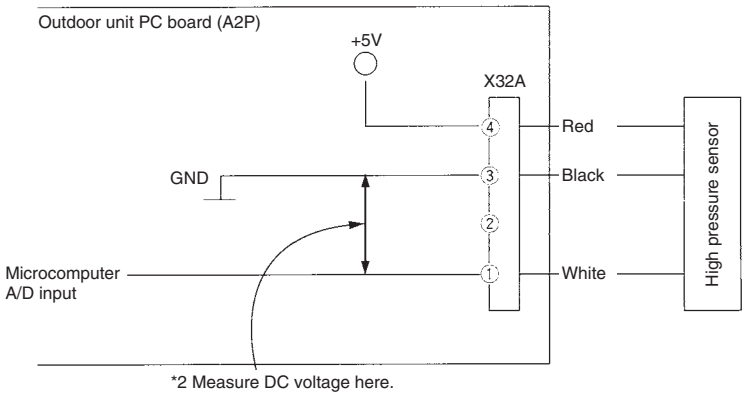

(V2807)

∗2: Refer to "Pressure Sensor, Pressure / Voltage Characteristics" table on P272.

3.30 "JC" Outdoor Unit: Malfunction of Low Pressure Sensor

Remote Control Display

JC

Applicable Models

ERQ 125 ~ 250 A7W1

Method of Malfunction Detection

Malfunction is detected from pressure detected by low pressure sensor.

Malfunction Decision Conditions

When the low pressure sensor is short circuit or open circuit.

Supposed Causes

- Defect of low pressure sensor system
- Connection of high pressure sensor with wrong connection.
- Defect of outdoor unit PC board.

Troubleshooting

Caution Be sure to turn off power switch before connect or disconnect connector, or parts damage may be occurred.

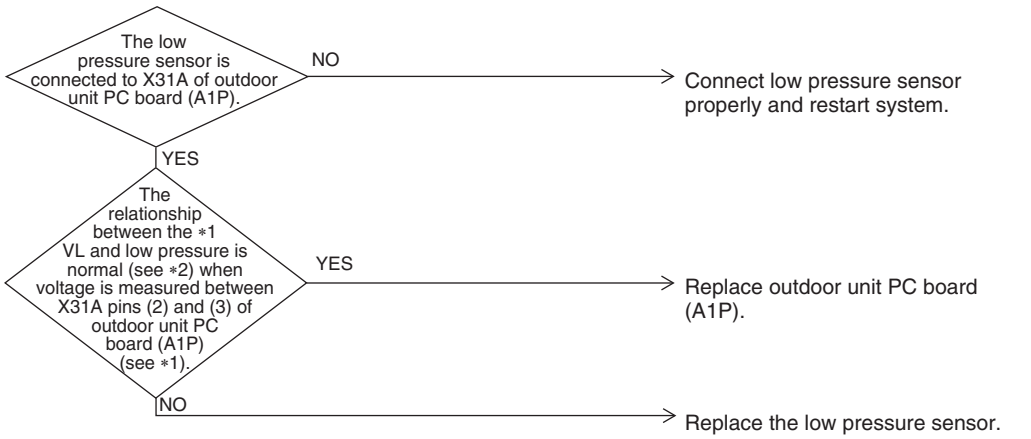

∗1: Voltage measurement point

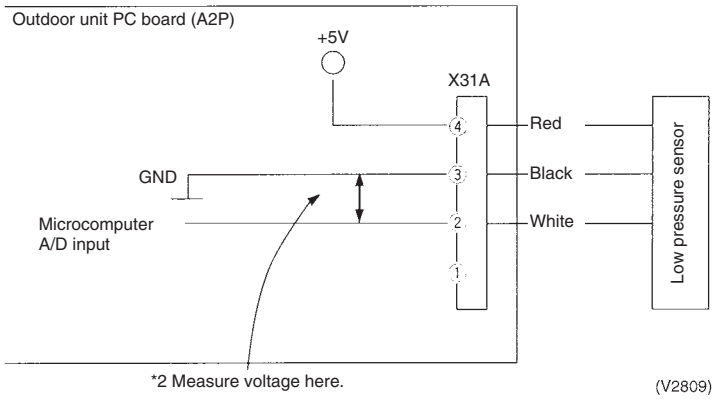

∗2: Refer to "Pressure Sensor, Pressure / Voltage Characteristics" table on P272.

3.31 "L4" Outdoor Unit: Malfunction of Inverter Radiating Fin Temperature Rise

Remote Control Display

L4

Applicable Models

ERQ 125 ~ 250 A7W1

Method of Malfunction Detection

Fin temperature is detected by the thermistor of the radiation fin.

Malfunction Decision Conditions

When the temperature of the inverter radiation fin increases above 93°C.

Supposed Causes

- Actuation of fin thermal (Actuates above 93°C)
- Defect of inverter PC board
- Defect of fin thermistor

Troubleshooting

Caution Be sure to turn off power switch before connect or disconnect connector, or parts damage may be occurred.

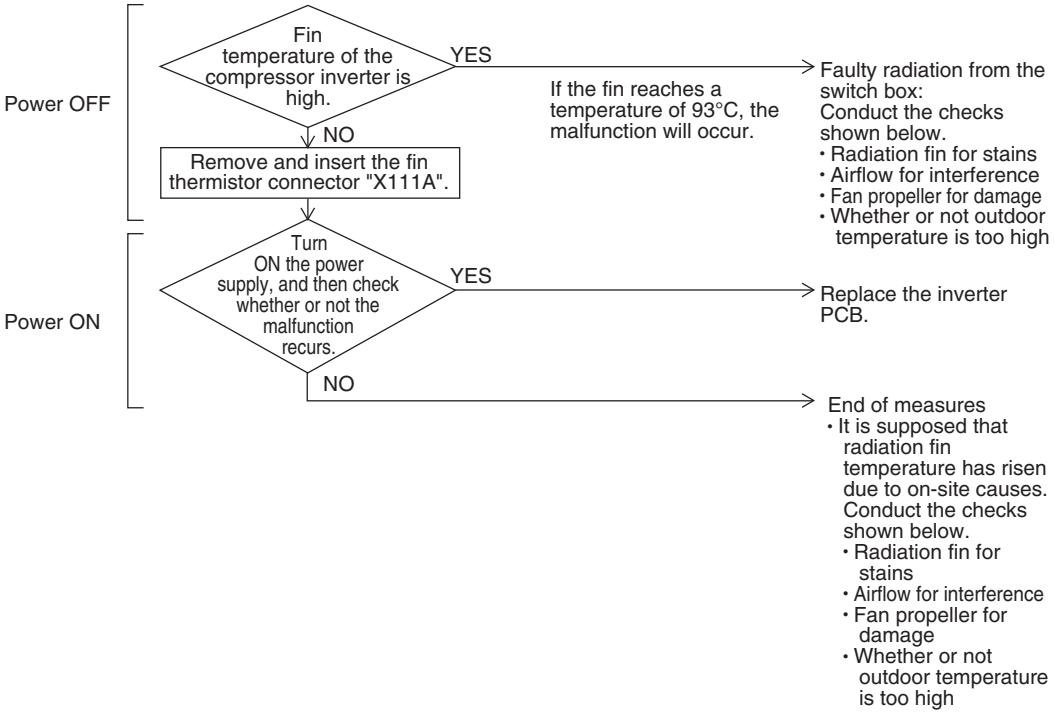

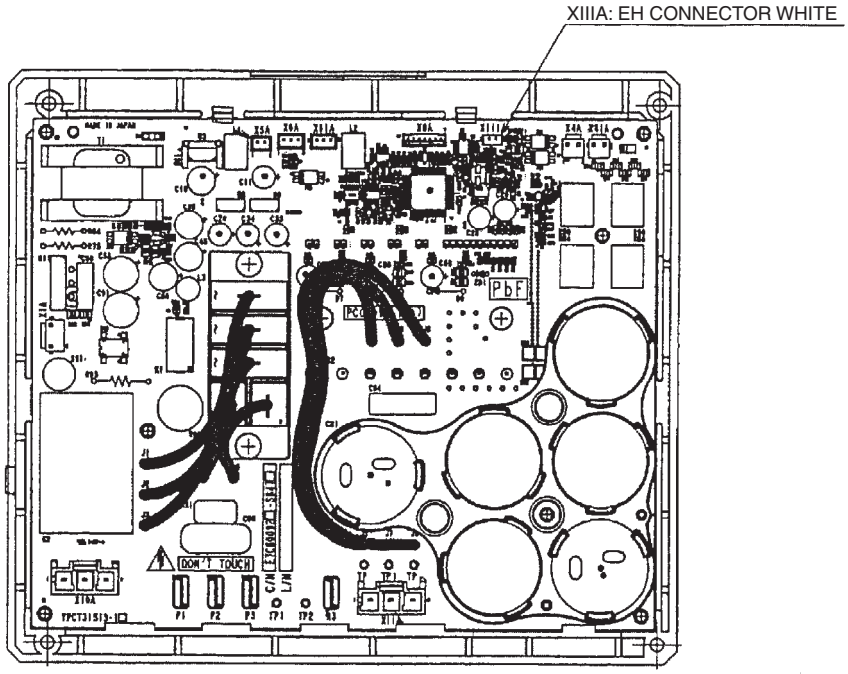

Inverter PCB for compressor

∗ Refer to “Thermistor Resistance / Temperature Characteristics” table on P270.

3.32 "L5" Outdoor Unit: Inverter Compressor Abnormal

Remote Control Display

L5

Applicable Models

ERQ 125 ~ 250 A7W1

Method of Malfunction Detection

Malfunction is detected from current flowing in the power transistor.

Malfunction Decision Conditions

When an excessive current flows in the power transistor.
(Instantaneous overcurrent also causes activation.)

Supposed Causes

- Defect of compressor coil (disconnected, defective insulation)
- Compressor start-up malfunction (mechanical lock)
- Defect of inverter PC board

Troubleshooting

Compressor inspection

Caution Be sure to turn off power switch before connect or disconnect connector, or parts damage may be occurred.

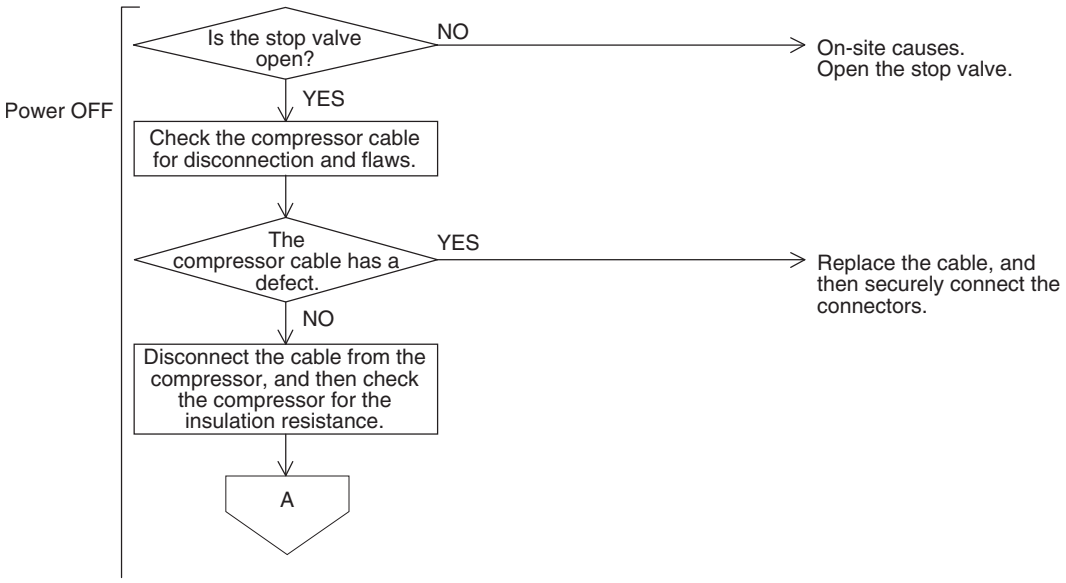

Troubleshooting

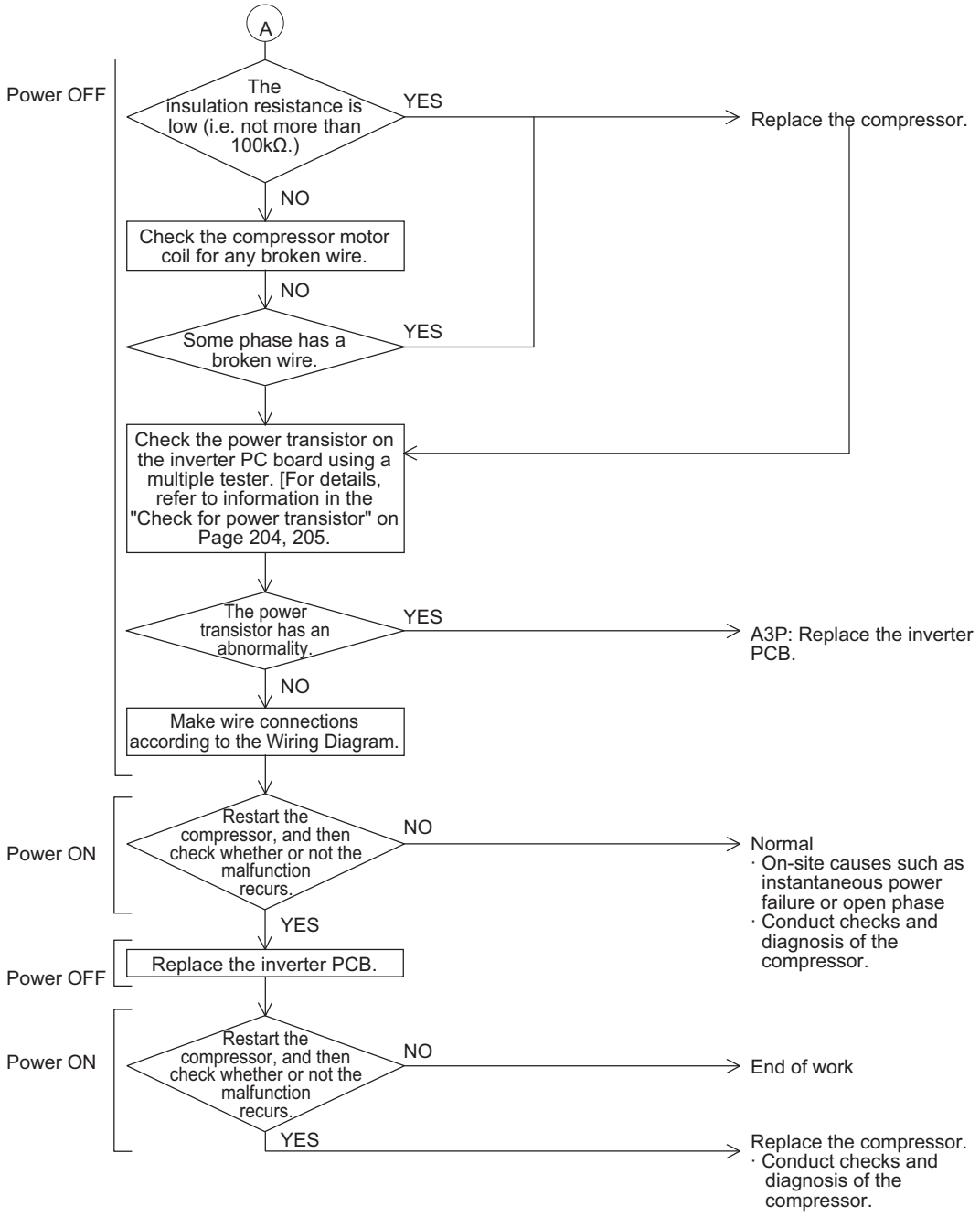

3.33 "L8" Outdoor Unit: Inverter Current Abnormal

Remote Control Display

L8

Applicable Models

ERQ 125 ~ 250 A7W1

Method of Malfunction Detection

Malfunction is detected by current flowing in the power transistor.

Malfunction Decision Conditions

When overload in the compressor is detected. (Inverter secondary current 16.1A)

Supposed Causes

- Compressor overload
- Compressor coil disconnected
- Defect of inverter PC board
- Faulty compressor

Troubleshooting

Output current check

Caution Be sure to turn off power switch before connect or disconnect connector, or parts damage may be occurred.

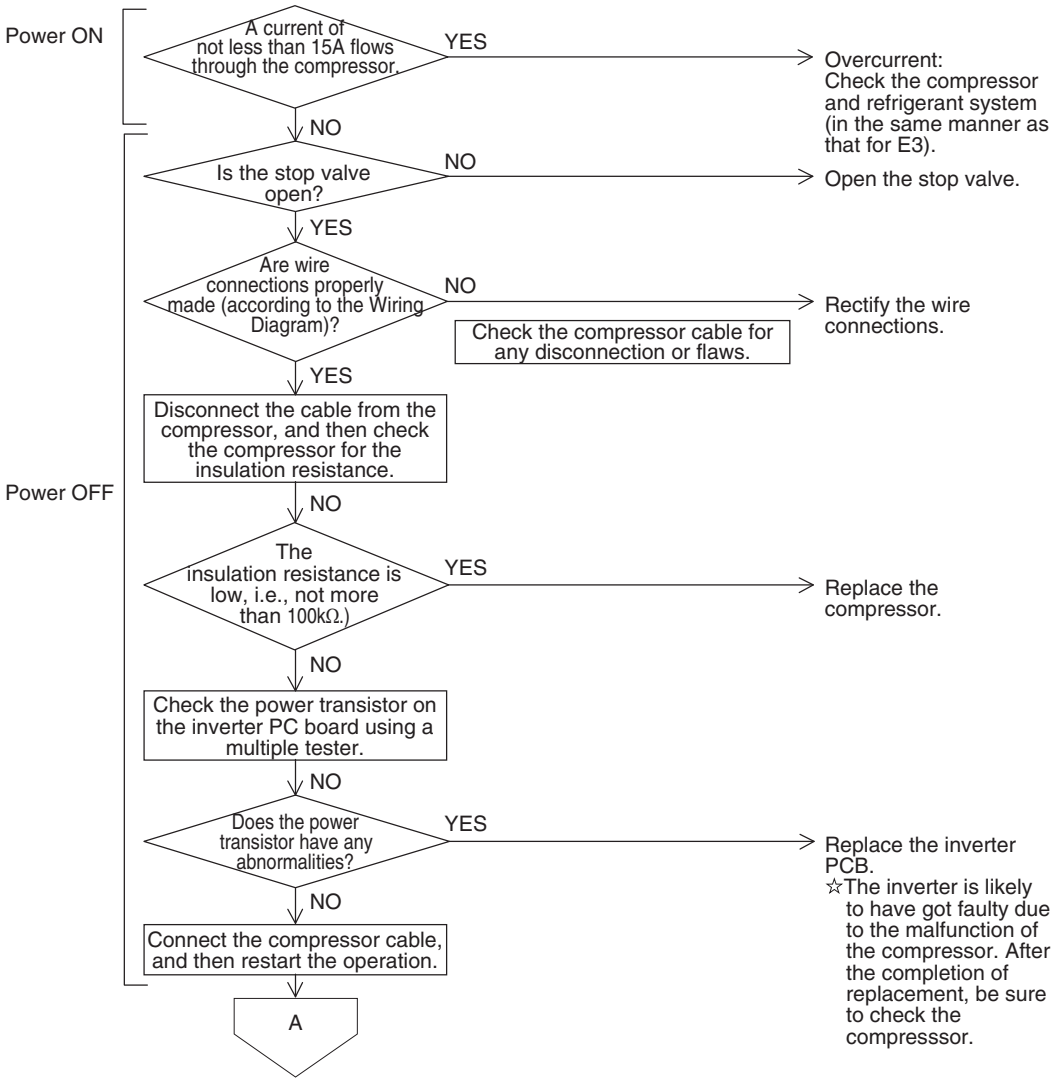

Troubleshooting

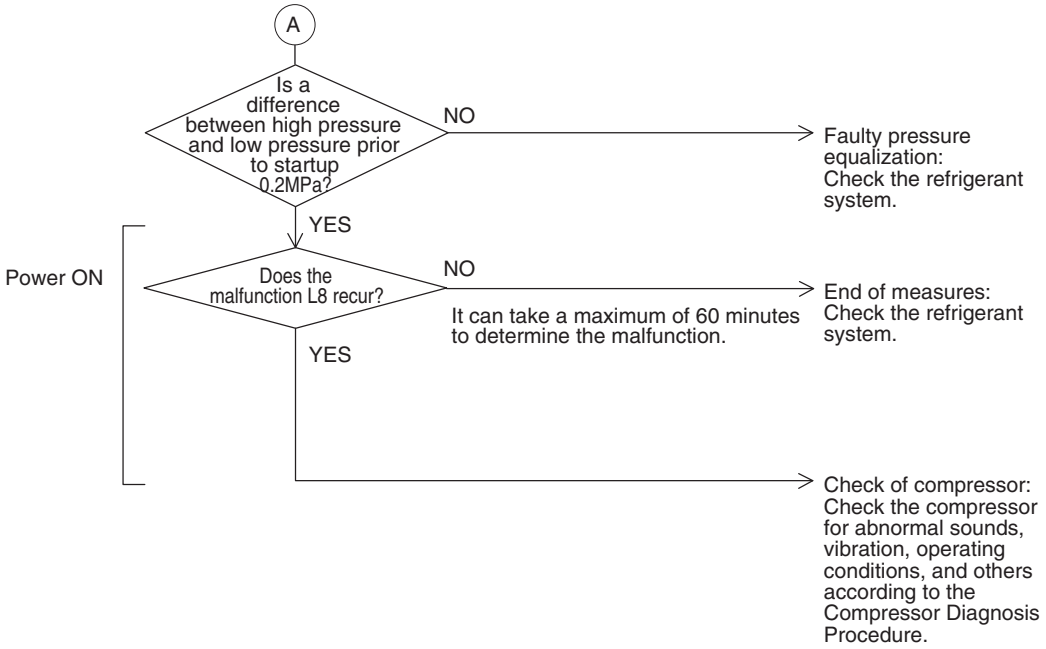

3.34 "L9" Outdoor Unit: Inverter Start up Error

Remote Control Display

L9

Applicable Models

ERQ 125 ~ 250 A7W1

Method of Malfunction Detection

This malfunction code will be output if overcurrent occurs at the time of startup.

Malfunction Decision Conditions

When the startup control is failed.
When an overcurrent is passed to the inverter due to the malfunction of a compressor or electrical system.

Supposed Causes

- Defect of compressor
- Pressure differential start
- Defect of inverter PC board
- Failure to open the stop valve
- Faulty compressor connection

Troubleshooting

Caution Be sure to turn off power switch before connect or disconnect connector, or parts damage may be occurred.

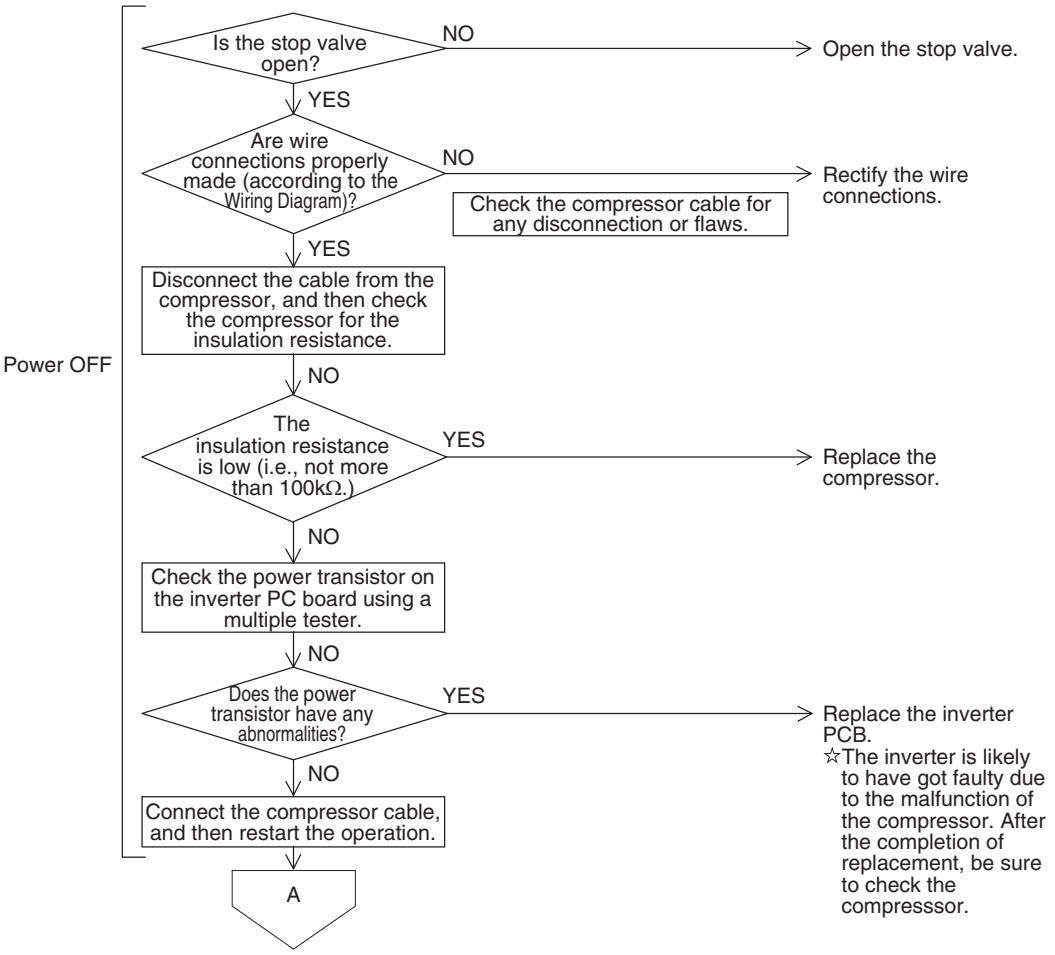

Troubleshooting

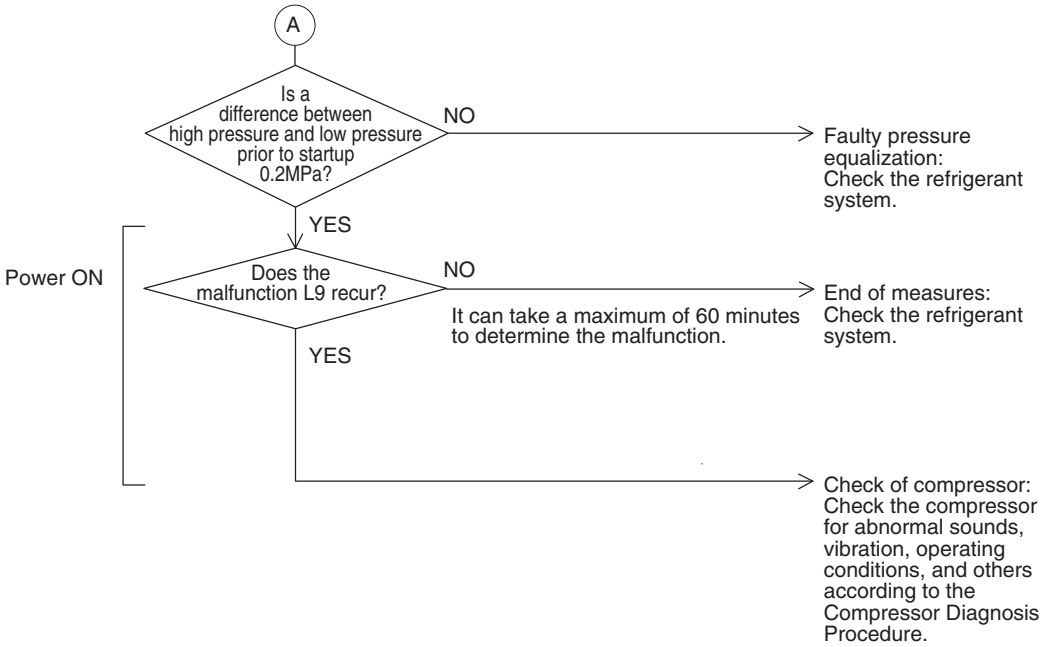

3.35 "LC" Outdoor Unit: Malfunction of Transmission Between Inverter and Control PC Board

Remote Control Display	LC
Applicable Models	ERQ 125 ~ 250 A7W1
Method of Malfunction Detection	Check the communication state between inverter PC board and control PC board by micro-computer.
Malfunction Decision Conditions	When the correct communication is not conducted in certain period.
Supposed Causes	■ Malfunction of connection between the inverter PC board and outdoor control PC board ■ Defect of outdoor control PC board (transmission section) ■ Defect of inverter PC board ■ Defect of noise filter ■ Faulty fan inverter ■ Incorrect type of fan inverter ■ Faulty compressor ■ Faulty fan motor

Troubleshooting

Caution Be sure to turn off power switch before connect or disconnect connector, or parts damage may be occurred.

Power ON

Are the fan transmission wire connectors (X3A: Black, X4A: Yellow) wrongly connected?

- NO → Connect the connectors to the corresponding color (black or yellow).
- YES ↓

Check whether or not the power supply voltage between L2 and N falls in the range of 220 to 240VAC?

- NO → On-site cause. Correct the wiring.
- YES ↓

Power OFF

Is the type (PC No.) of the fan inverter correct?

- NO → Mount the correct type of fan inverter.
- YES ↓

	FAN1	FAN2
RXYQ5P	PC0511-3	-
RXYQ8P	PC0511-1	-
RXYQ10P	PC0511-1	-
RXYQ12P	PC0511-3	PC0511-4
RXYQ16P	PC0511-3	PC0511-4
RXYQ18P	PC0511-1	PC0511-2

Disconnect the cable from the compressor, and then check the compressor for the insulation resistance.

The insulation resistance is low (i.e., not more than 100kΩ.)

- YES → Replace the compressor.
- NO ↓

Disconnect the cable from the fan, and then check the fan motor for the insulation resistance.

The insulation resistance is low (i.e., not more than 1MΩ.)

- YES → Replace the fan motor. Replace the fan driver PC board.
- NO ↓

Check for connector connections: Remove and insert the connectors shown below.

[Fan 1]
- A1P X28A ⇔ X6A A3P
- A1P X20A ⇔ X4A A3P
- A3P X61A ⇔ X402A A2P
- A3P X1A ⇔ X403A A2P
- A3P X5A ⇔ X5A A4P
- A3P X41A ⇔ X3A A4P
- A4P X4A Short connector

[Fan 2]
- A4P X51A ⇔ X5A A8P
- A4P X4A ⇔ X3A A8P
- A8P X4A Short connector

Note) X3A: black
X4A: yellow

F400U of the A2P has been molten.

- YES → Replace the noise filter of the A2P.
- NO ↓

A

F400U

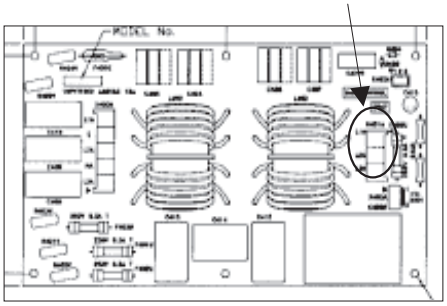

Troubleshooting

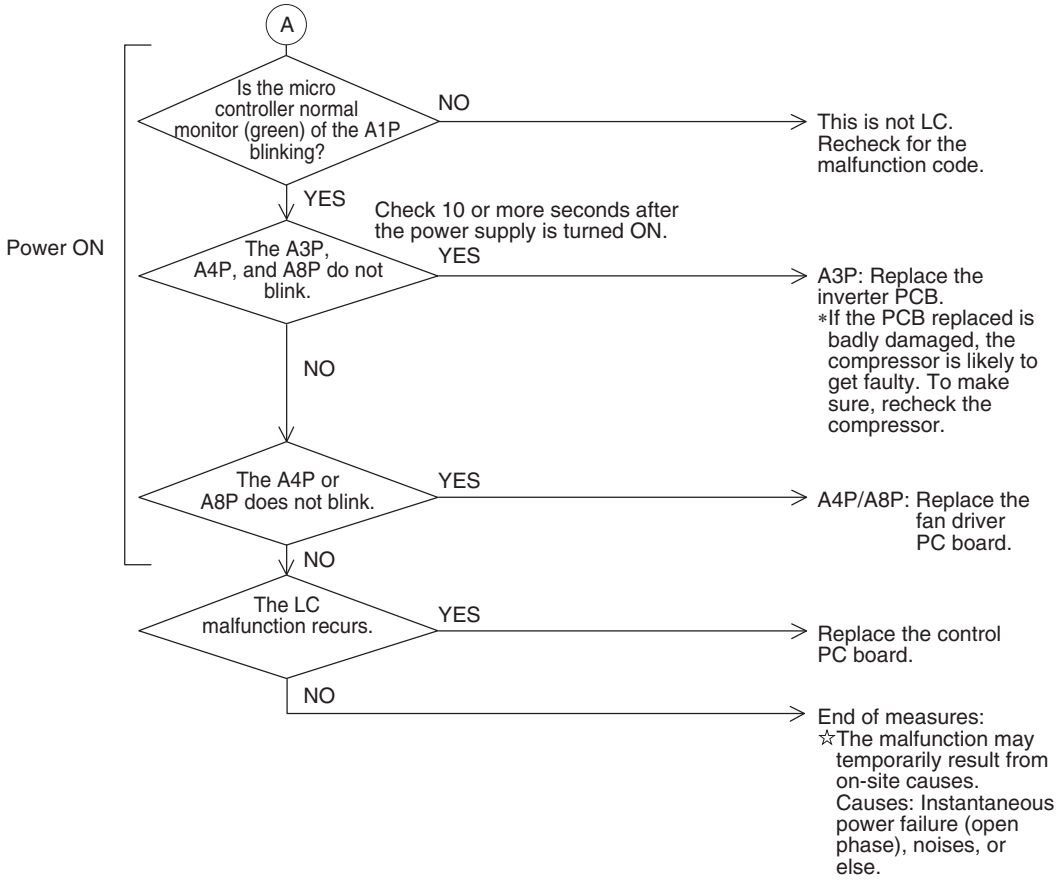

3.36 "P1" Outdoor Unit: Inverter Over-Ripple Protection

Remote Control Display

P1

Applicable Models

ERQ 125 ~ 250 A7W1

Method of Malfunction Detection

Imbalance in supply voltage is detected in PC board.
Imbalance in the power supply voltage causes increased ripple of voltage of the main circuit capacitor in the inverter. Consequently, the increased ripple is detected.

Malfunction Decision Conditions

When the resistance value of thermistor becomes a value equivalent to open or short circuited status.

★ Malfunction is not decided while the unit operation is continued.
"P1" will be displayed by pressing the inspection button.

When the amplitude of the ripple exceeding a certain value is detected for consecutive 4 minutes.

Supposed Causes

- Open phase
- Voltage imbalance between phases
- Defect of main circuit capacitor
- Defect of inverter PC board
- Defect of K2 relay in inverter PC board
- Improper main circuit wiring

Troubleshooting

Caution Be sure to turn off power switch before connect or disconnect connector, or parts damage may be occurred.

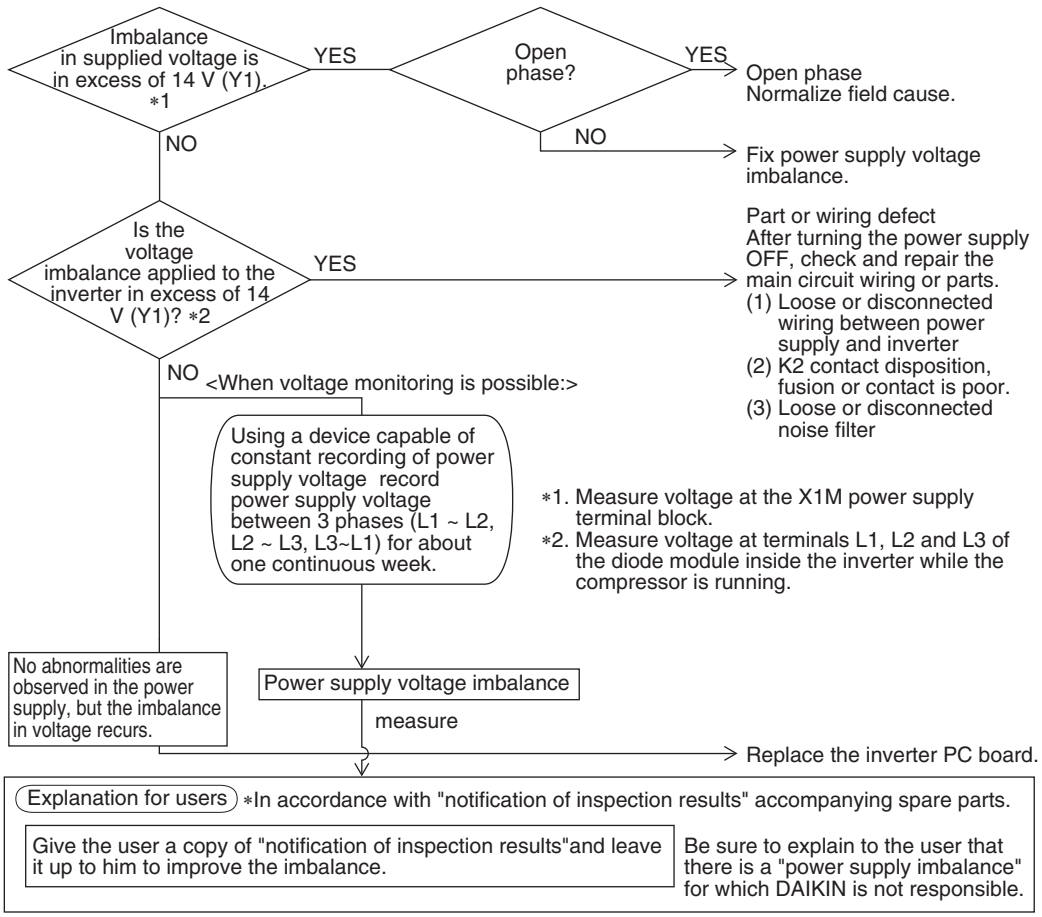

(V2816)

3.37 "P4" Outdoor Unit: Malfunction of Inverter Radiating Fin Temperature Rise Sensor

Remote Control Display

P4

Applicable Models

ERQ 125 ~ 250 A7W1

Method of Malfunction Detection

Resistance of radiation fin thermistor is detected when the compressor is not operating.

Malfunction Decision Conditions

When the resistance value of thermistor becomes a value equivalent to open or short circuited status.

★ Malfunction is not decided while the unit operation is continued.
"P4" will be displayed by pressing the inspection button.

Supposed Causes

- Defect of radiator fin temperature sensor
- Defect of inverter PC board

Troubleshooting

Caution Be sure to turn off power switch before connect or disconnect connector, or parts damage may be occurred.

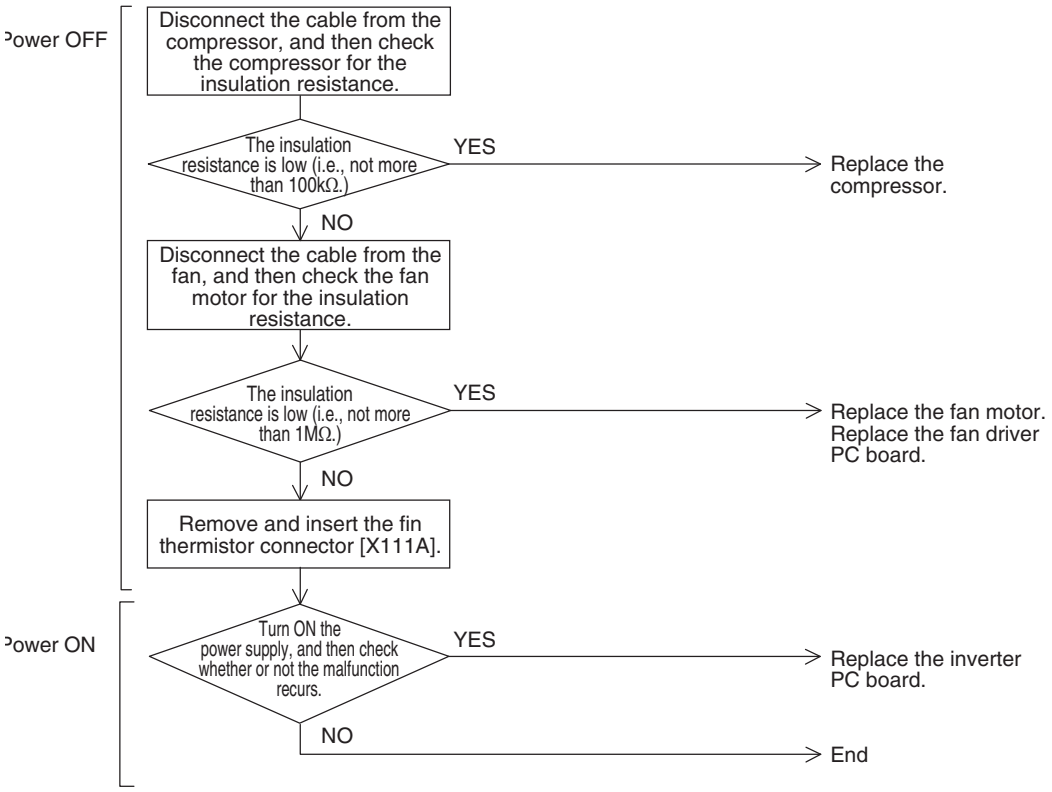

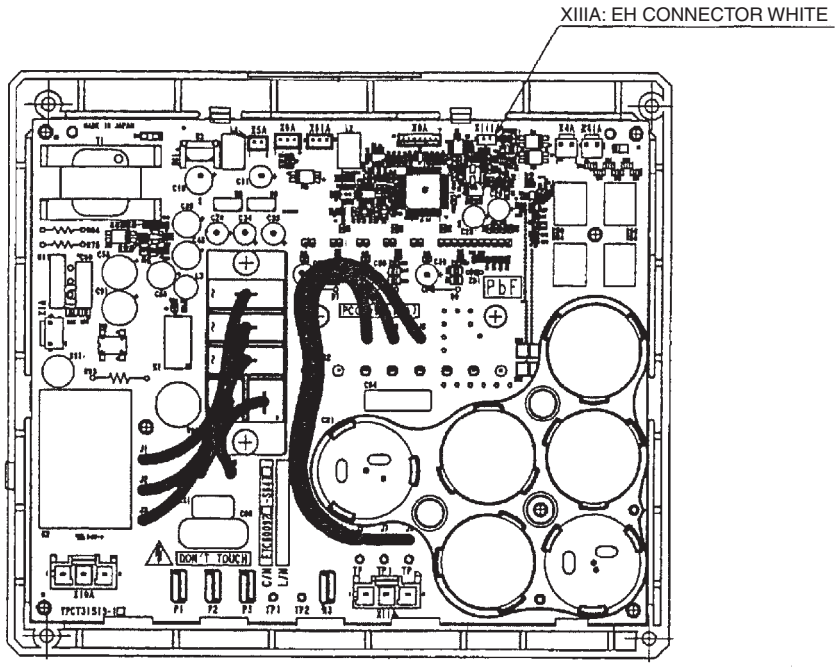

Inverter PCB for compressor

∗ Refer to “Thermistor Resistance / Temperature Characteristics” table on P270.

3.38 "PJ" Outdoor Unit: Faulty Field Setting after Replacing Main PC Board or Faulty Combination of PC Board

Remote Control Display

PJ

Applicable Models

ERQ 125 ~ 250 A7W1

Method of Malfunction Detection

The faulty (or no) field setting after replacing PC board or faulty PC board combination is detected through communications with the inverter.

Malfunction Decision Conditions

Whether or not the field setting or the type of the PC board is correct through the communication date is judged.

Supposed Causes

- Faulty (or no) field setting after replacing main PC board
- Mismatching of type of PC board

Troubleshooting

Caution Be sure to turn off power switch before connect or disconnect connector, or parts damage may be occurred.

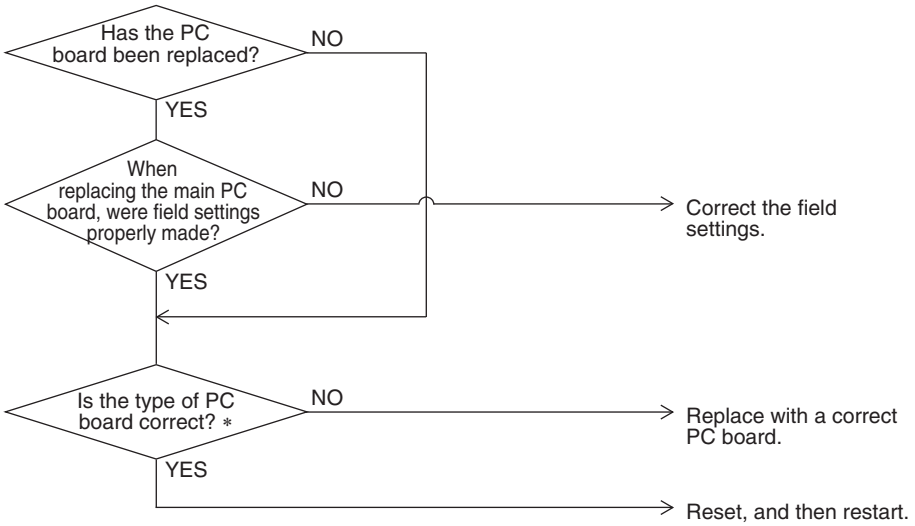

*Note) Type of PC board mismatching includes:
Main PC board
Inverter PC board (for compressor)
Fan driver PC board

3.39 "U0" Outdoor Unit: Low Pressure Drop Due to Refrigerant Shortage or Electronic Expansion Valve Failure

Remote Control Display

U0

Applicable Models

ERQ 125 ~ 250 A7W1

Method of Malfunction Detection

Short of gas malfunction is detected by discharge pipe temperature thermistor.

Malfunction Decision Conditions

Microcomputer judge and detect if the system is short of refrigerant.
★Malfunction is not decided while the unit operation is continued.

Supposed Causes

- Out of gas or refrigerant system clogging (incorrect piping)
- Defect of pressure sensor
- Defect of outdoor unit PC board (A1P)
- Defect of thermistor R7T or R4T

Troubleshooting

Caution Be sure to turn off power switch before connect or disconnect connector, or parts damage may be occurred.

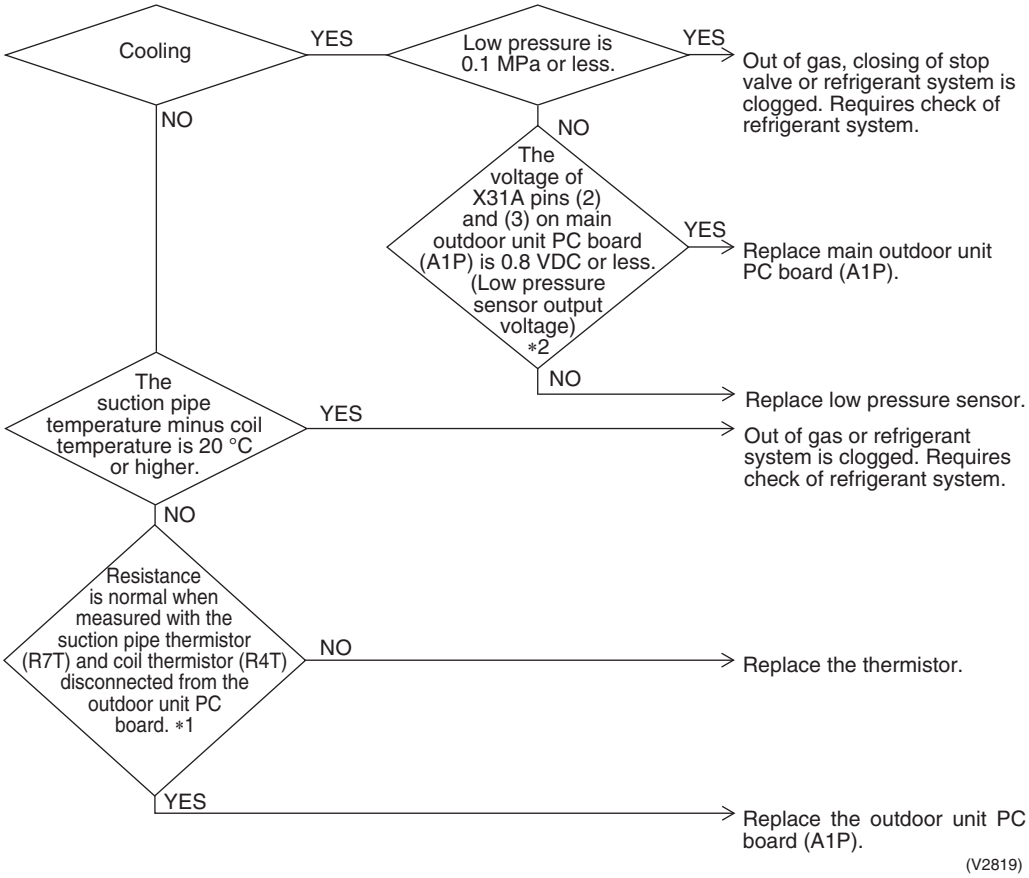

*1: Refer to "Thermistor Resistance / Temperature Characteristics" table on P270.
*2: Refer to "Pressure Sensor, Pressure / Voltage Characteristics" table on P272.

3.40 "U1" Reverse Phase, Open Phase

Remote Control Display

U1

Applicable Models

ERQ 125 ~ 250 A7W1

Method of Malfunction Detection

The phase of each phase is detected by reverse phase detection circuit and right phase or reverse phase are judged.

Malfunction Decision Conditions

When a significant phase difference is made between phases.

Supposed Causes

- Power supply reverse phase
- Power supply open phase
- Defect of outdoor PC board (A1P)

Troubleshooting

Caution Be sure to turn off power switch before connect or disconnect connector, or parts damage may be occurred.

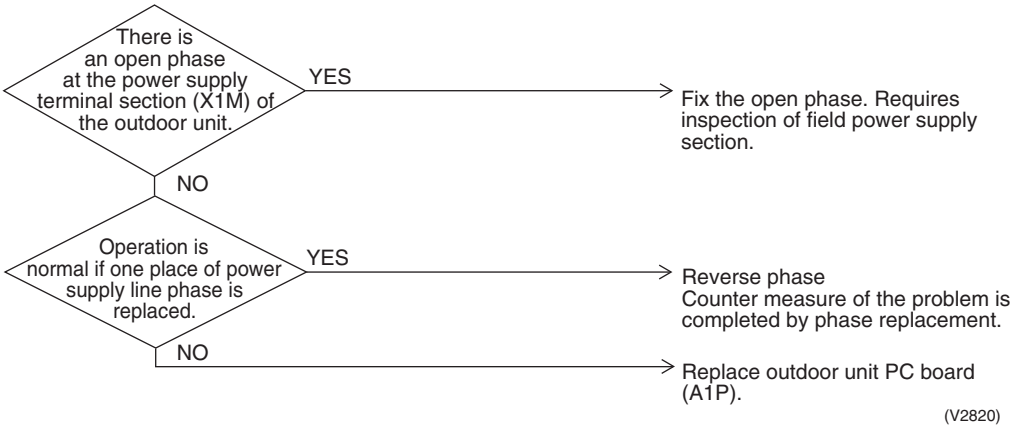

3.41 "U2" Outdoor Unit: Power Supply Insufficient or Instantaneous Failure

Remote Control Display	U2
Applicable Models	ERQ 125 ~ 250 A7W1
Method of Malfunction Detection	Detection of voltage of main circuit capacitor built in the inverter and power supply voltage.
Malfunction Decision Conditions	When the voltage aforementioned is not less than 780V or not more than 320V, or when the current-limiting voltage does not reach 200V or more or exceeds 740V.
Supposed Causes	■ Power supply insufficient ■ Instantaneous power failure ■ Open phase ■ Defect of inverter PC board ■ Defect of outdoor control PC board ■ Main circuit wiring defect ■ Faulty compressor ■ Faulty fan motor ■ Faulty connection of signal cable

Troubleshooting

Caution Be sure to turn off power switch before connect or disconnect connector, or parts damage may be occurred.

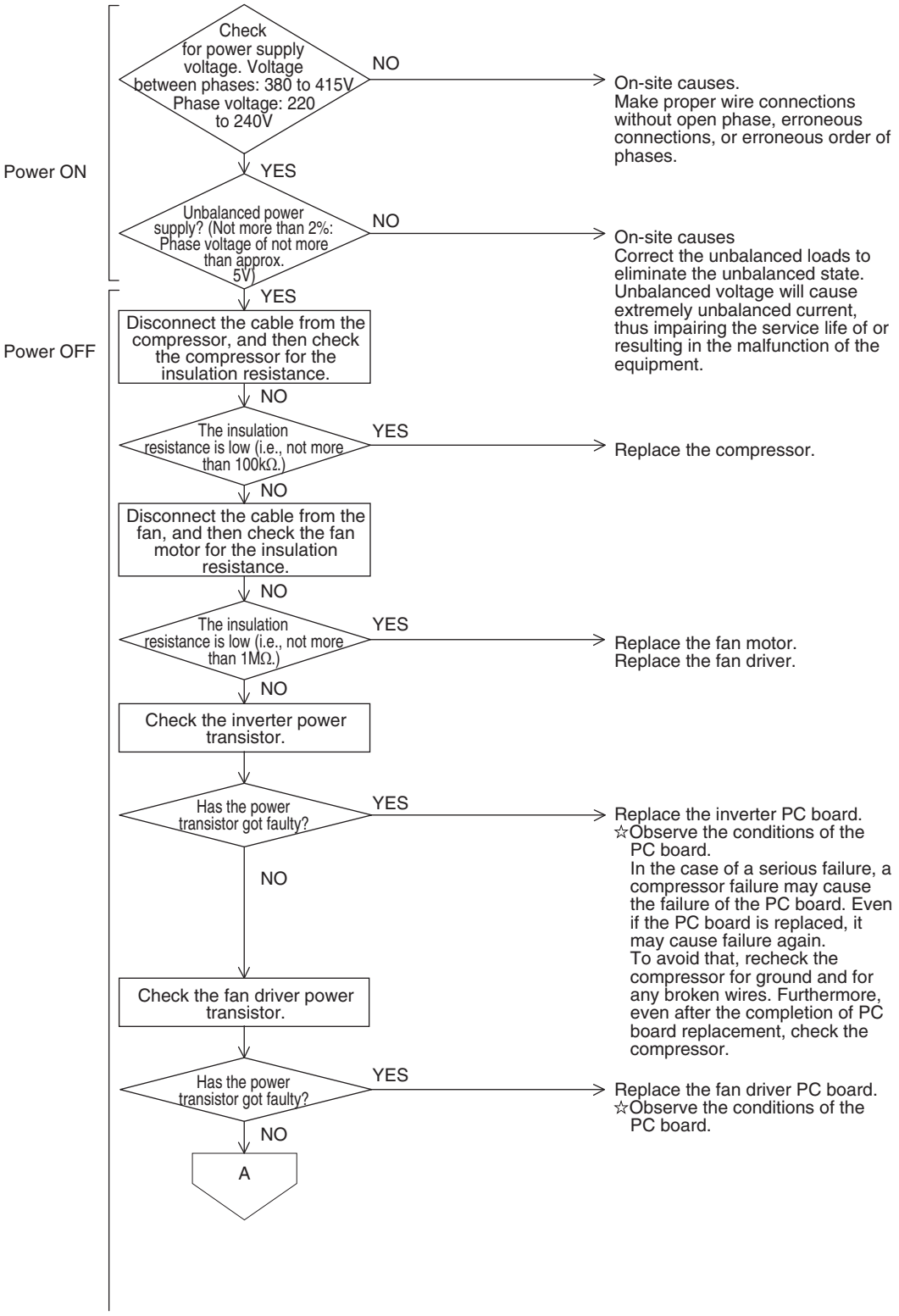

Troubleshooting

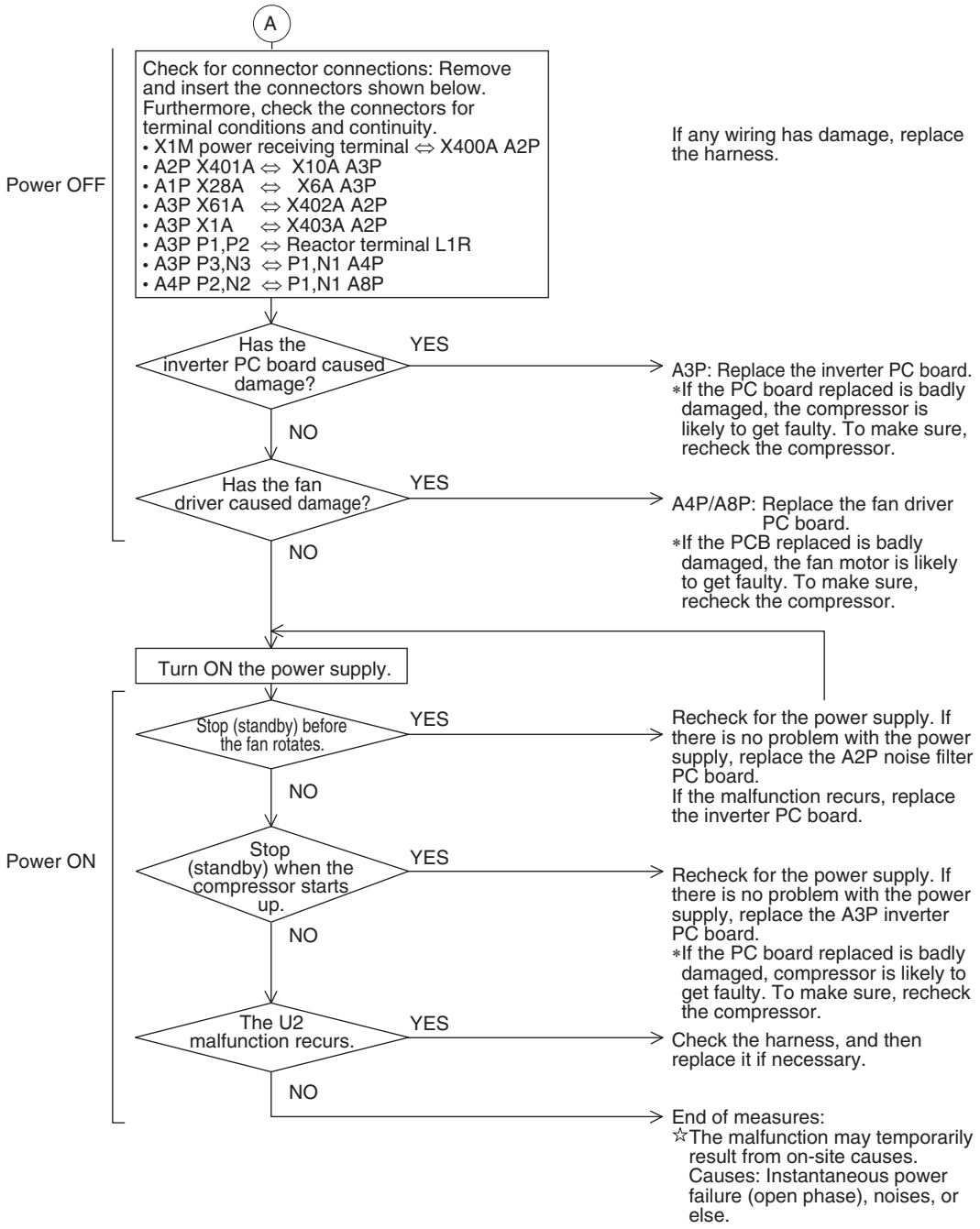

3.42 "U3" Outdoor Unit: Check Operation not Executed

Remote Control Display

U3

Applicable Models

ERQ 125 ~ 250 A7W1

Method of Malfunction Detection

Check operation is executed or not

Malfunction Decision Conditions

Malfunction is decided when the unit starts operation without check operation.

Supposed Causes

- Check operation is not executed.

Troubleshooting

Caution Be sure to turn off power switch before connect or disconnect connector, or parts damage may be occurred.

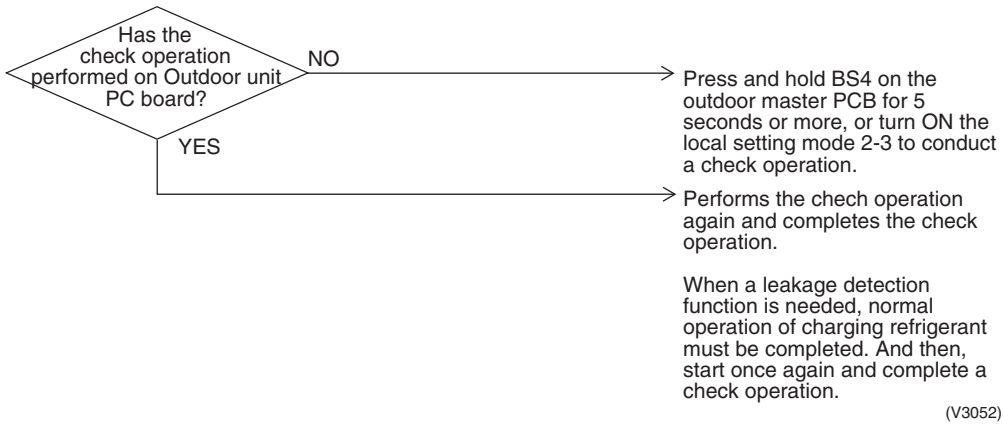

3.43 "U4" Malfunction of Transmission Between AHUs

Remote Control Display	U4
Applicable Models	All model of AHU ERQ 125 ~ 250 A7W1
Method of Malfunction Detection	Microcomputer checks if transmission between AHU and outdoor units is normal.
Malfunction Decision Conditions	When transmission is not carried out normally for a certain amount of time
Supposed Causes	■ Indoor to outdoor, outdoor to outdoor transmission wiring F1, F2 disconnection, short circuit or wrong wiring ■ Outdoor unit power supply is OFF ■ System address doesn't match ■ Defect of AHU PC board ■ Defect of outdoor unit PC board

Troubleshooting

Caution: Be sure to turn off power switch before connect or disconnect connector, or parts damage may be occurred.

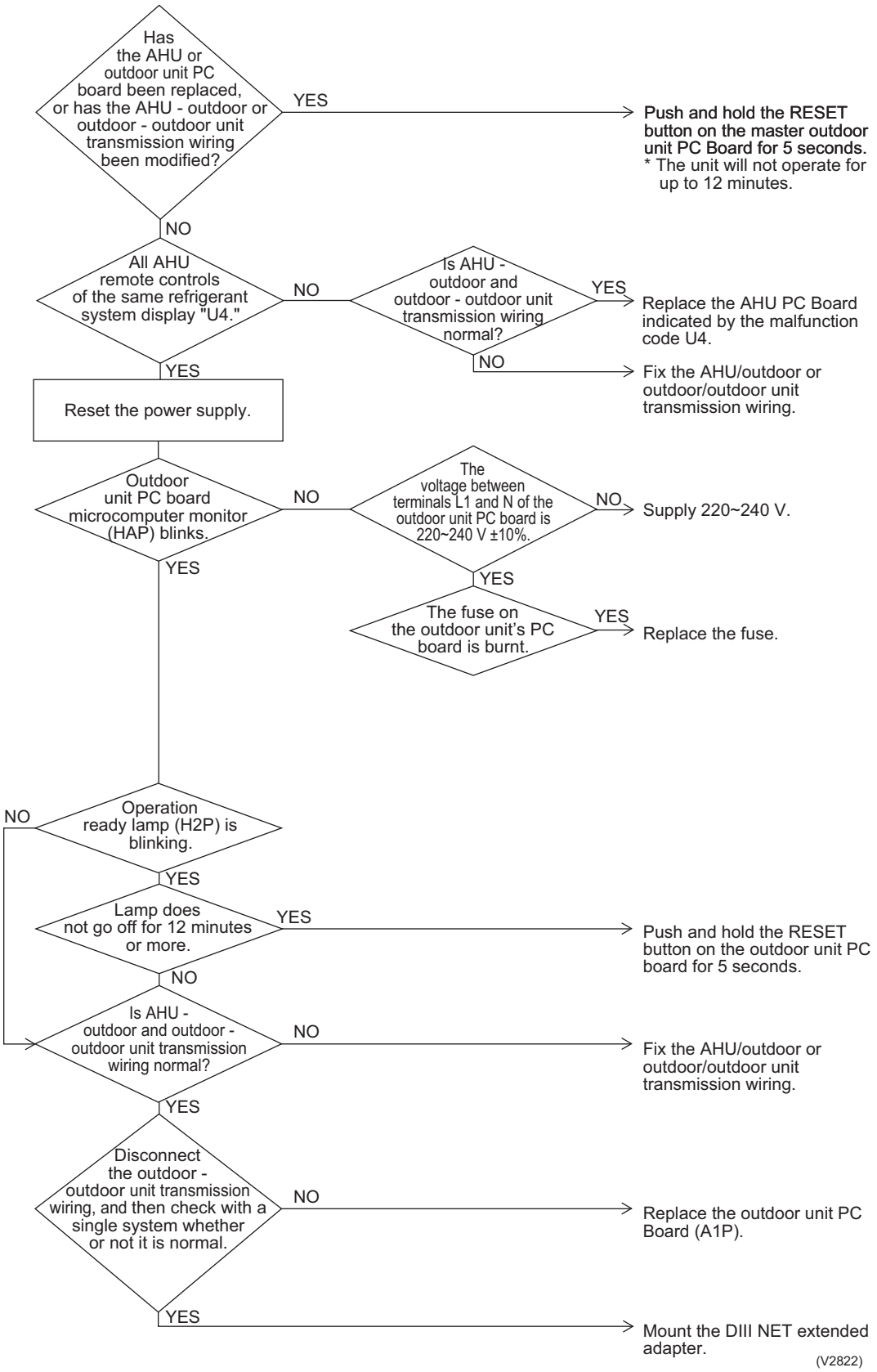

3.44 "U5" AHU: Malfunction of Transmission Between Remote Control and AHU

Remote Control Display

U5

Applicable Models

All models of AHUs

Method of Malfunction Detection

In case of controlling with 2-remote control, check the system using microcomputer is signal transmission between AHU and remote control (main and sub) is normal.

Malfunction Decision Conditions

Normal transmission does not continue for specified period.

Supposed Causes

- Malfunction of AHU remote control transmission
- Connection of two main remote controls (when using 2 remote controls)
- Defect of AHU PC board
- Defect of remote control PC board
- Malfunction of transmission caused by noise

Troubleshooting

Caution Be sure to turn off power switch before connect or disconnect connector, or parts damage may be occurred.

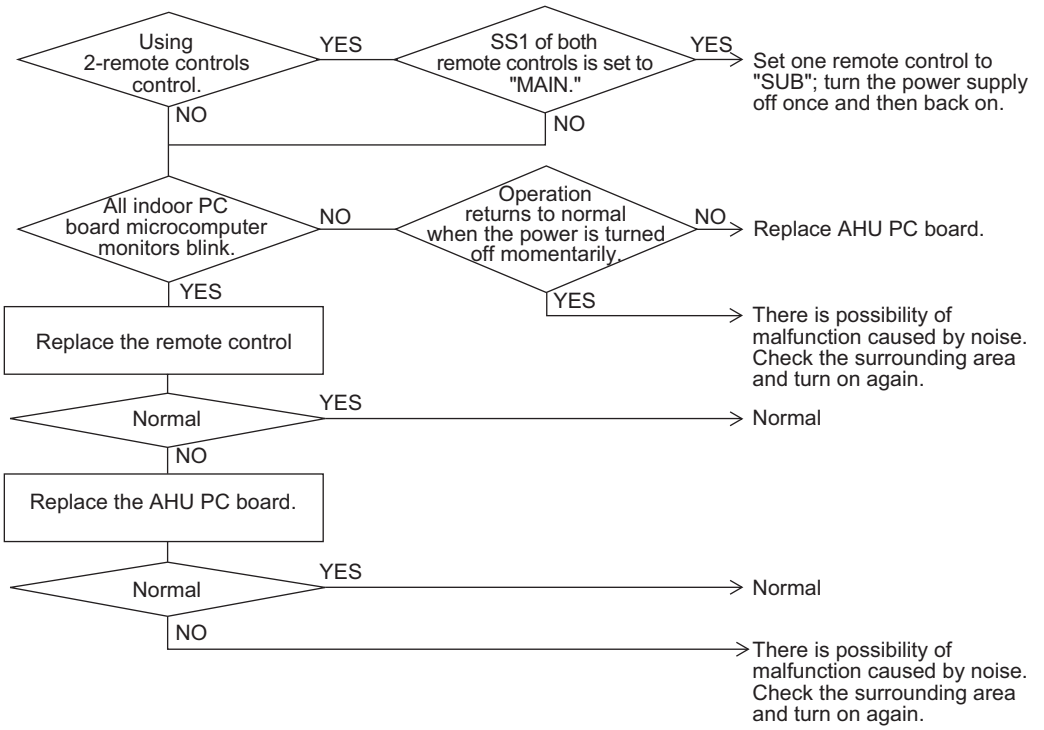

3.45 "U9" AHU: Malfunction of Transmission Between AHU and Outdoor Units in the Same System

Remote Control Display

U9

Applicable Models

All models of AHUs

Method of Malfunction Detection

Detect the malfunction signal of any other AHU within the system concerned.

Malfunction Decision Conditions

When the malfunction decision is made on any other AHU within the system concerned.

Supposed Causes

- Malfunction of transmission within or outside of other system
- Malfunction of electronic expansion valve in AHU of other system
- Defect of PC board of AHU in other system
- Improper connection of transmission wiring between AHU and outdoor unit

Troubleshooting

Caution Be sure to turn off power switch before connect or disconnect connector, or parts damage may be occurred.

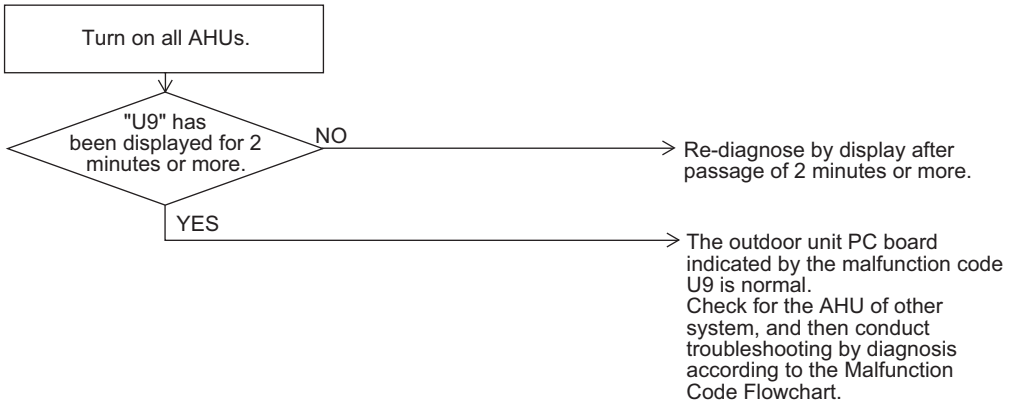

3.46 "UA" Improper Combination of AHU and Outdoor Units, AHUs and Remote Control

Remote Control Display	UA
Applicable Models	All models of AHU ERQ 125 ~ 250 A7W1
Method of Malfunction Detection	A difference occurs in data by the type of refrigerant between AHU and outdoor units. The number of AHUs is out of the allowable range.
Malfunction Decision Conditions	The malfunction decision is made as soon as either of the abnormalities aforementioned is detected.
Supposed Causes	■ Excess of connected AHUs ■ Defect of outdoor unit PC board (A1P) ■ Mismatching of the refrigerant type of AHU and outdoor unit. ■ Setting of outdoor PC board was not conducted after replacing to spare parts PC board.

Troubleshooting

Caution Be sure to turn off power switch before connect or disconnect connector, or parts damage may be occurred.

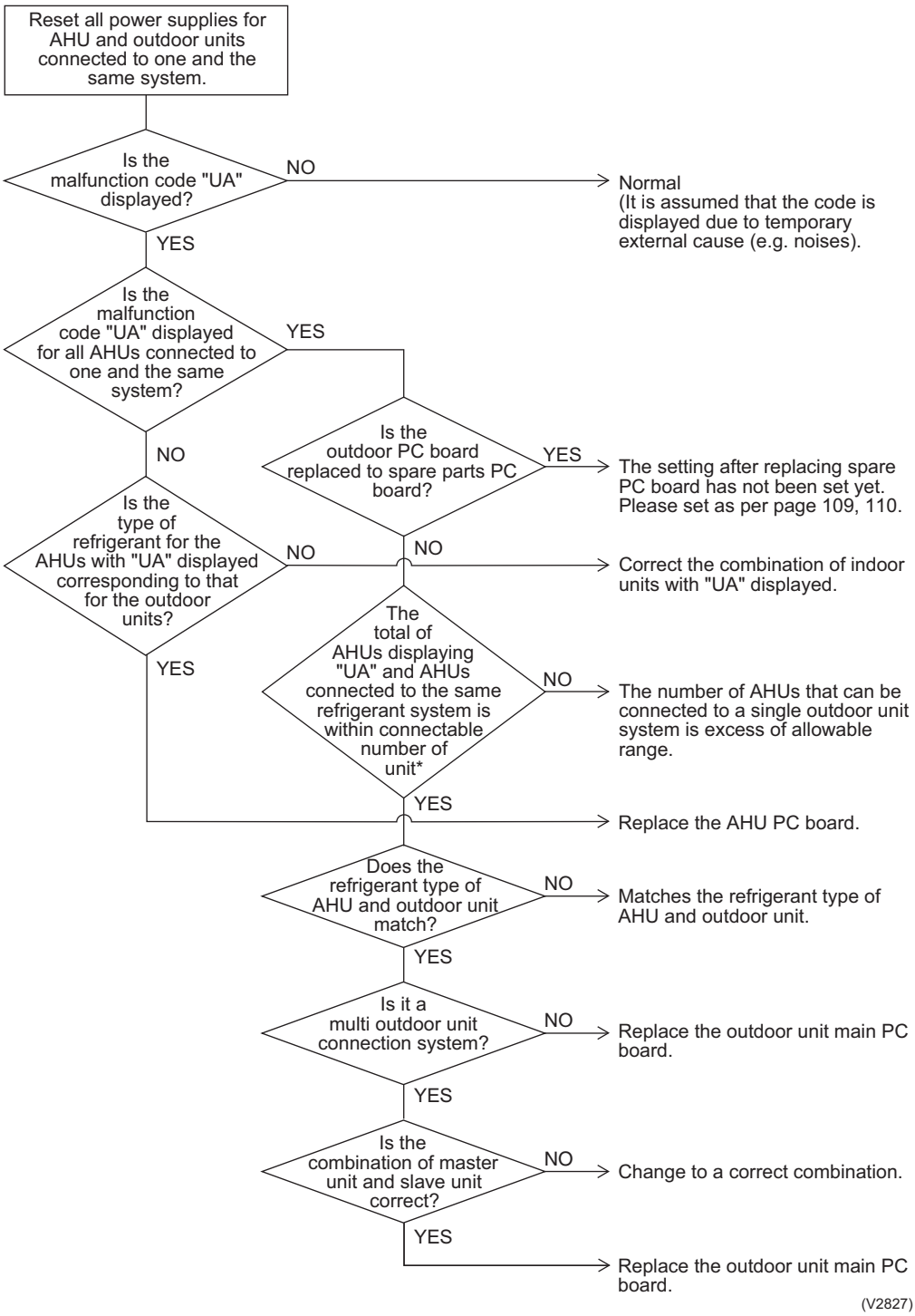

∗ The number of AHUs that can be connected to a single outdoor unit system depends on the model of outdoor unit.

3.47 "UF" System is not Set yet

Remote Control Display

UF

Applicable Models

All models of AHUs
ERQ 125 ~ 250 A7W1

Method of Malfunction Detection

On check operation, the number of AHUs in terms of transmission is not corresponding to that of AHUs that have made changes in temperature.

Malfunction Decision Conditions

The malfunction is determined as soon as the abnormality aforementioned is detected through checking the system for any erroneous connection of units on the check operation.

Supposed Causes

- Improper connection of transmission wiring between AHU-outdoor units and outdoor-outdoor units
- Failure to execute check operation
- Defect of AHU PC board
- Stop valve is left in closed

Troubleshooting

Caution Be sure to turn off power switch before connect or disconnect connector, or parts damage may be occurred.

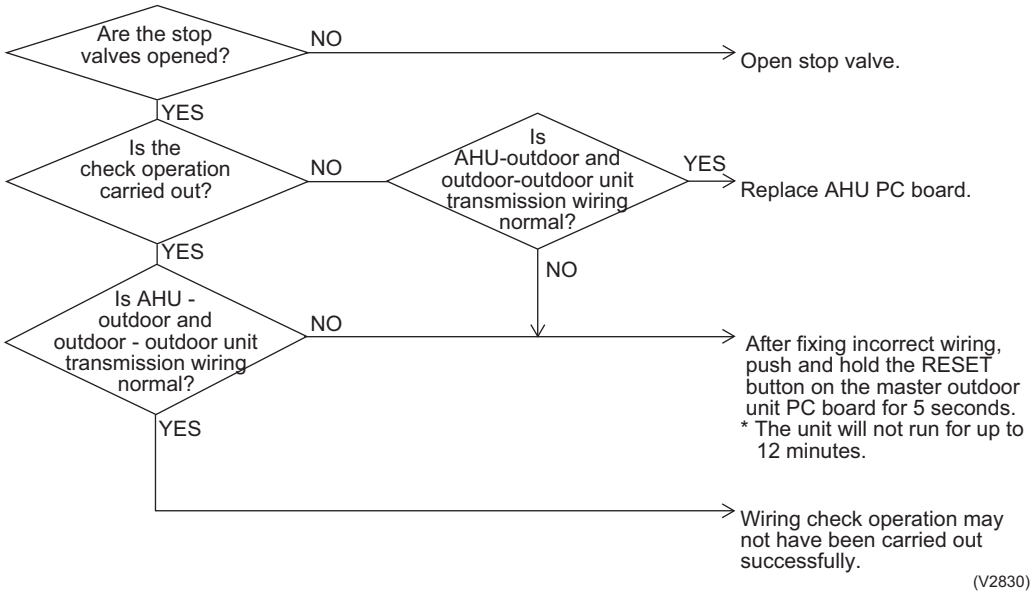

Note: Wiring check operation may not be successful if carried out after the outdoor unit has been off for more than 12 hours, or if it is not carried out after running all connected AHUs in the fan mode for at least an hour.

3.48 "UH" Malfunction of System, Refrigerant System Address Undefined

Remote Control Display	UH
Applicable Models	All models of AHUs ERQ 125 ~ 250 A7W1
Method of Malfunction Detection	Detect an AHU with no address setting.
Malfunction Decision Conditions	The malfunction decision is made as soon as the abnormality aforementioned is detected.
Supposed Causes	■ Improper connection of transmission wiring between AHU-outdoor units and outdoor-outdoor units ■ Defect of AHU PC board ■ Defect of outdoor unit PC board (A1P)

Troubleshooting

Caution Be sure to turn off power switch before connect or disconnect connector, or parts damage may be occurred.

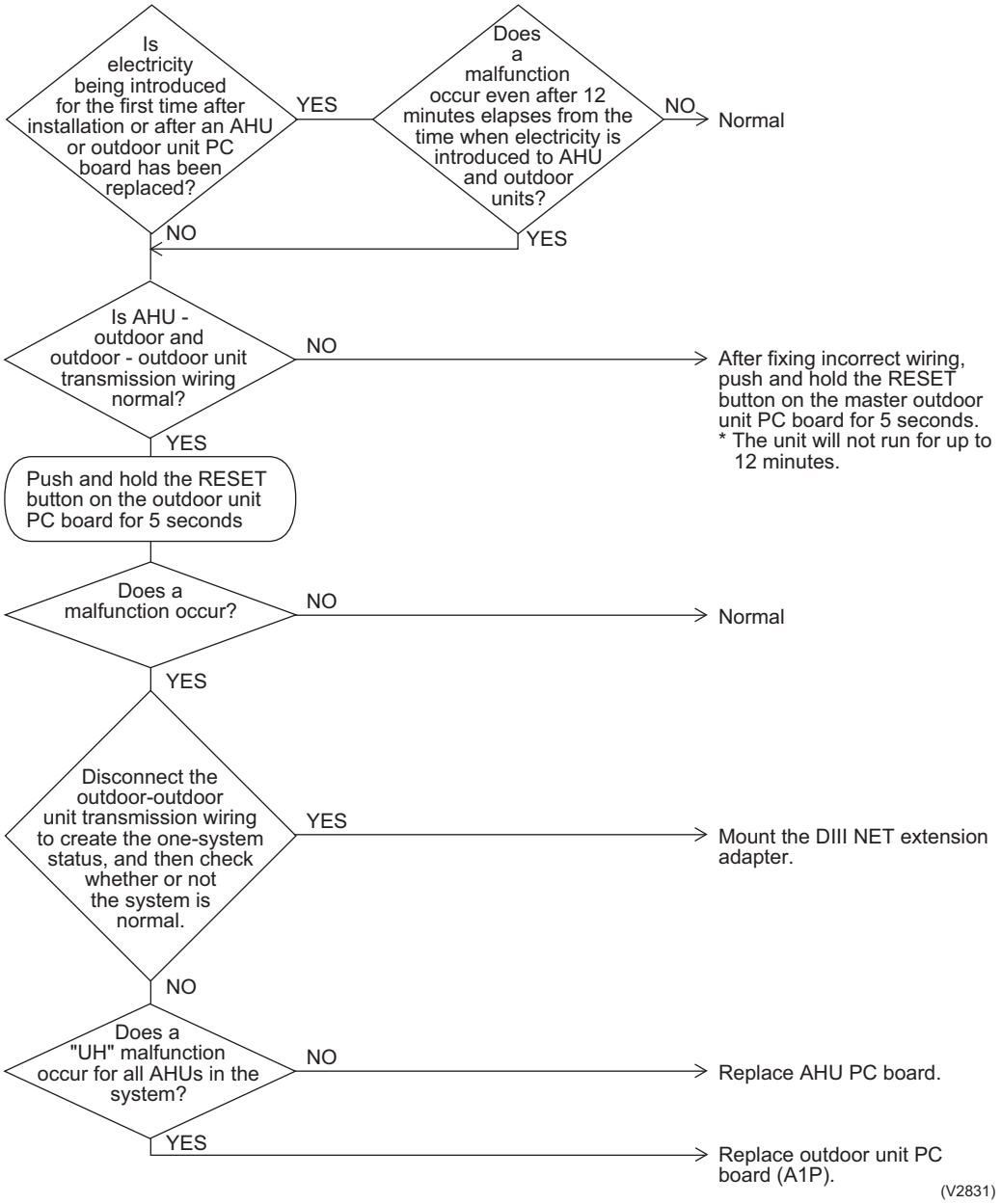

4. Troubleshooting (OP: Unified ON/OFF Controller)

4.1 Operation Lamp Blinks

Remote Control Display	Operation lamp blinks
Applicable Models	All model of AHUs Unified ON/OFF controller
Method of Malfunction Detection	Detect the malfunction according to DIII-NET transmission data.
Malfunction Decision Conditions	
Supposed Causes	■ Malfunction of transmission between optional central controller and AHU ■ Connector for setting master controller is disconnected ■ Defect of unified ON/OFF controller PC board ■ Defect of AHU PC board ■ Malfunction of air conditioner

Troubleshooting

Caution Be sure to turn off power switch before connect or disconnect connector, or parts damage may be occurred.

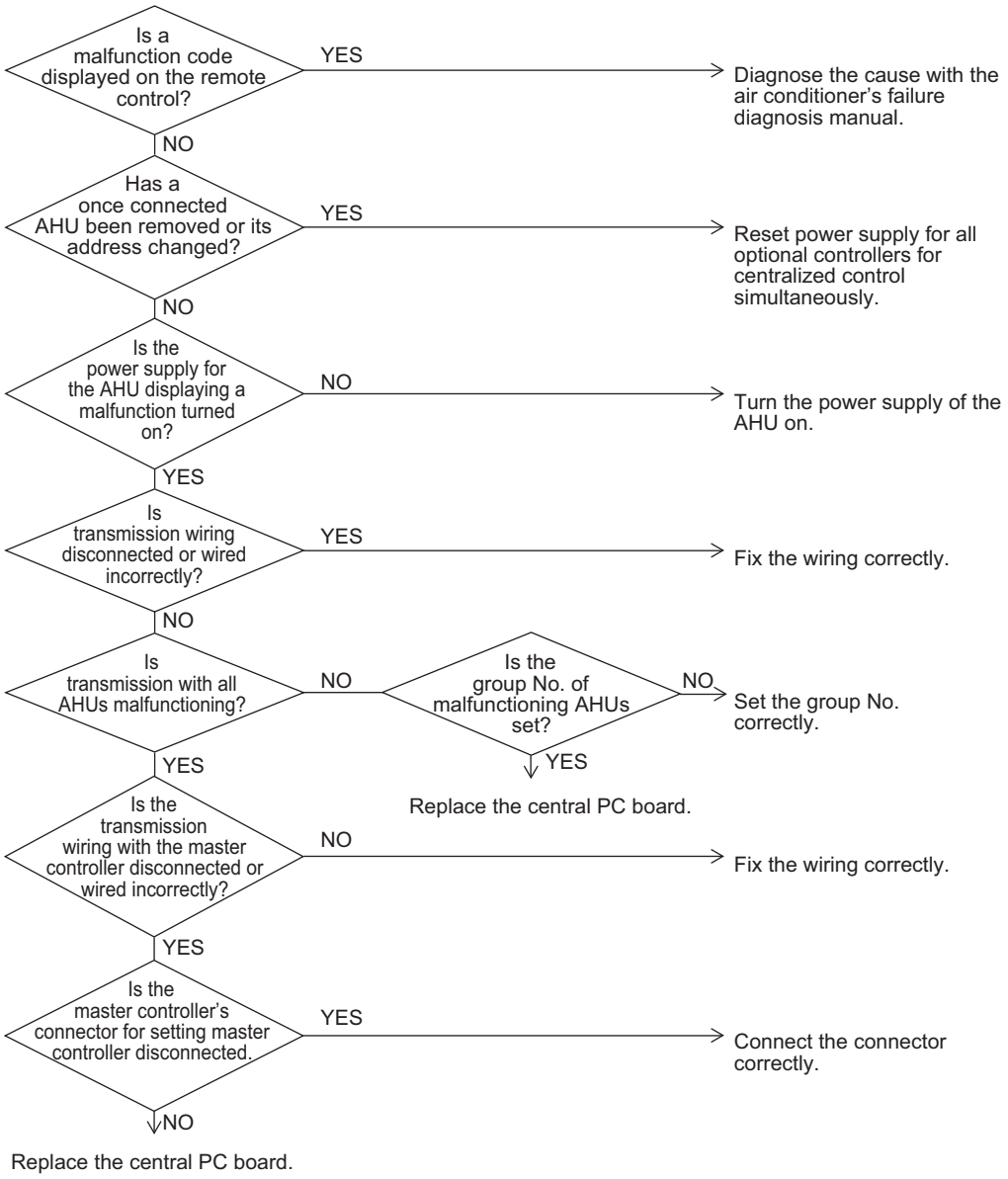

Check No. 1

Check on connector of fan motor (Power supply cable)

(1) Turn off the power supply.
Measure the resistance between phases of U,V,W at the motor side connectors (three-core wire) to check that the values are balanced and there is no short circuiting, while connector or relay connector is disconnected.

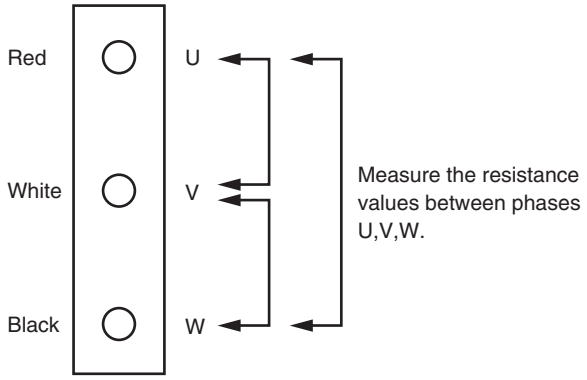

Check No. 2

(1) Turn off the power supply.
(2) Measure the resistance between Vcc and each phase of U,V,W, and GND and each phase at the motor side connectors (five-core wire) to check that the values are balanced within the range of ± 20 %, while connector or relay connector is disconnected.
Furthermore, to use a multiple meter for measurement, connect the probe of negative pole to Vcc and that of positive pole to GND.

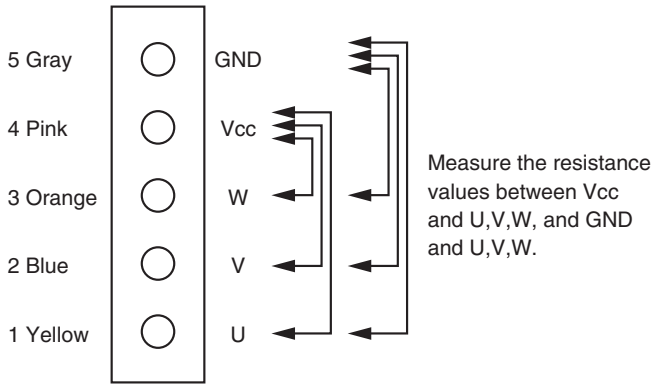

[CHECK 3] Check for causes of rise in high pressure

Referring to the Fault Tree Analysis (FTA) shown below, probe the faulty points.

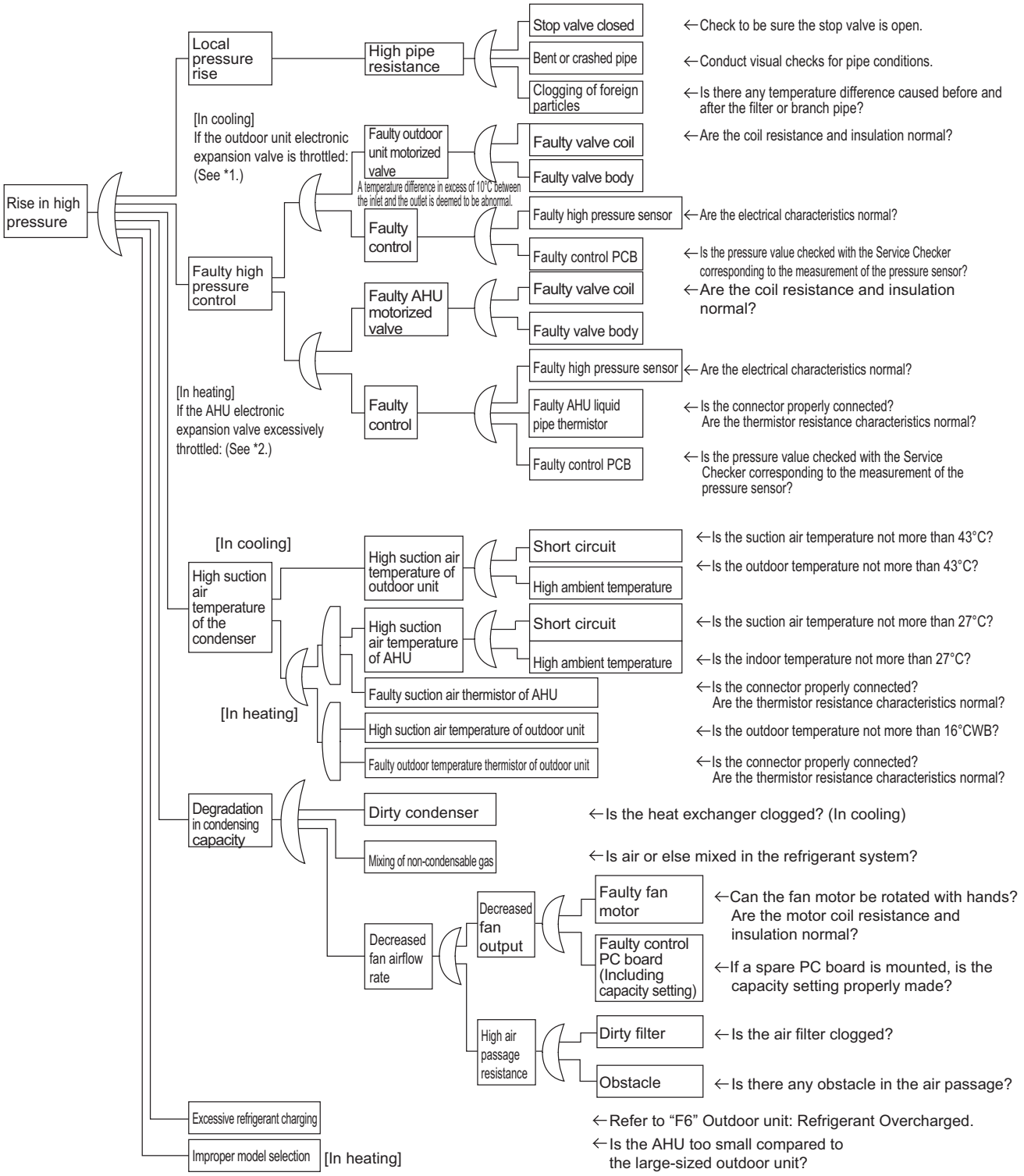

*1: In cooling, it is normal if the outdoor unit electronic expansion valve (EV1) is fully open.
*2: In heating, the AHU electronic expansion valve is used for "subcooled degree control".

SDK04009

[CHECK 4] Check for causes of drop in low pressure

Referring to the Fault Tree Analysis (FTA) shown below, probe the faulty points.

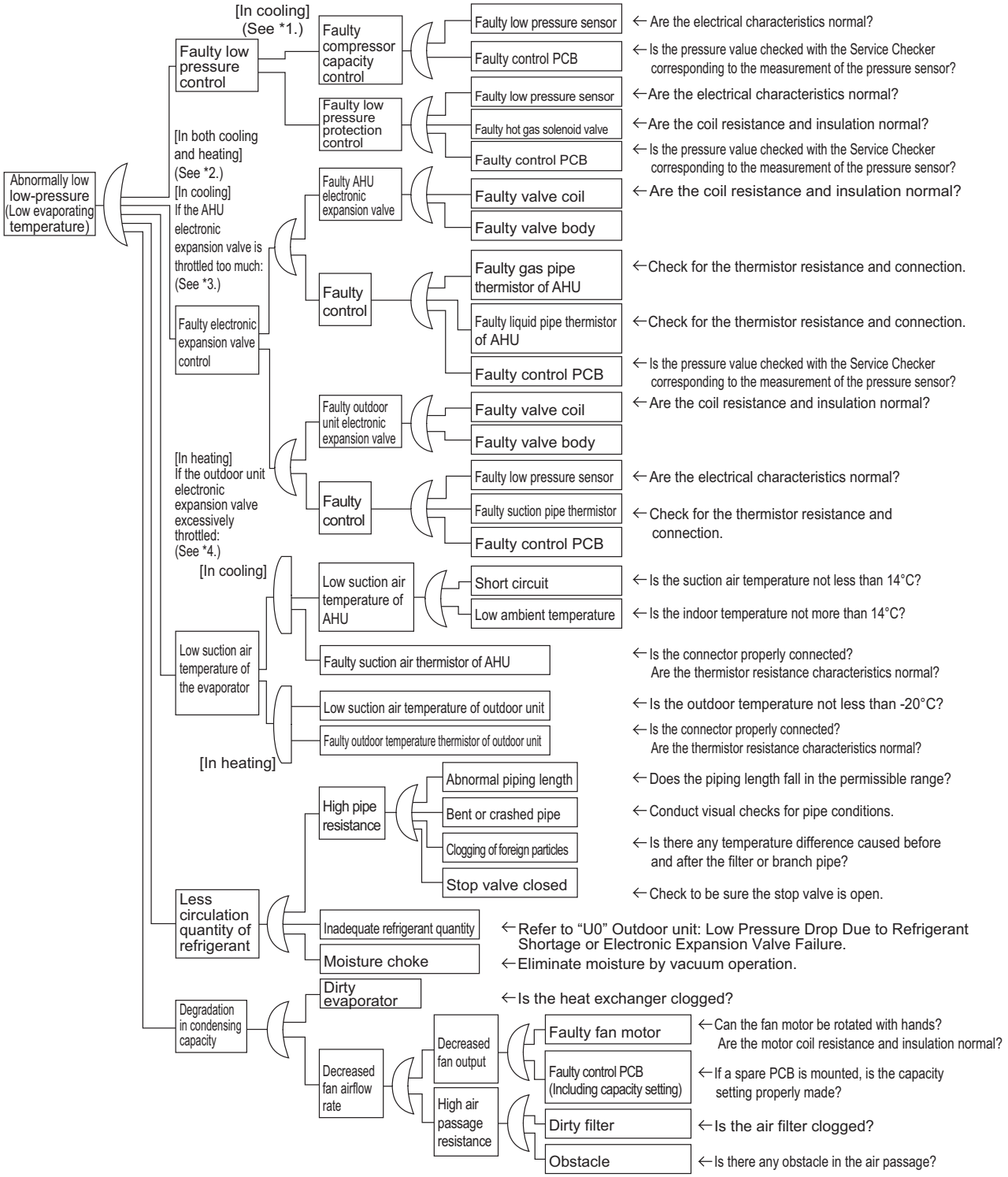

*1: For details of the compressor capacity control while in cooling, refer to "Compressor PI Control".
*2: The "low pressure protection control" includes low pressure protection control and hot gas bypass control. For details, refer to "Low Pressure Protection Control".
*3: In cooling, the AHU electronic expansion valve is used for "superheated degree control".
*4: In heating, the outdoor unit electronic expansion valve (EV1) is used for "superheated degree control of outdoor unit heat exchanger".

SDK04009

Part 9
Appendix

1. Piping Diagrams 260
   1.1 Outdoor Unit 260
2. Wiring Diagrams for Reference 263
   2.1 Outdoor Unit 263
   2.2 Field Wiring 266
3. List of Electrical and Functional Parts 267
   3.1 Outdoor Unit 267
4. Option List 269
5. Thermistor Resistance / Temperature Characteristics 270
6. Pressure Sensor 272
7. Method of Checking The Inverter's Power Transistors and Diode Modules 273

1. Piping Diagrams

1.1 Outdoor Unit

ERQ 125 A7W1B

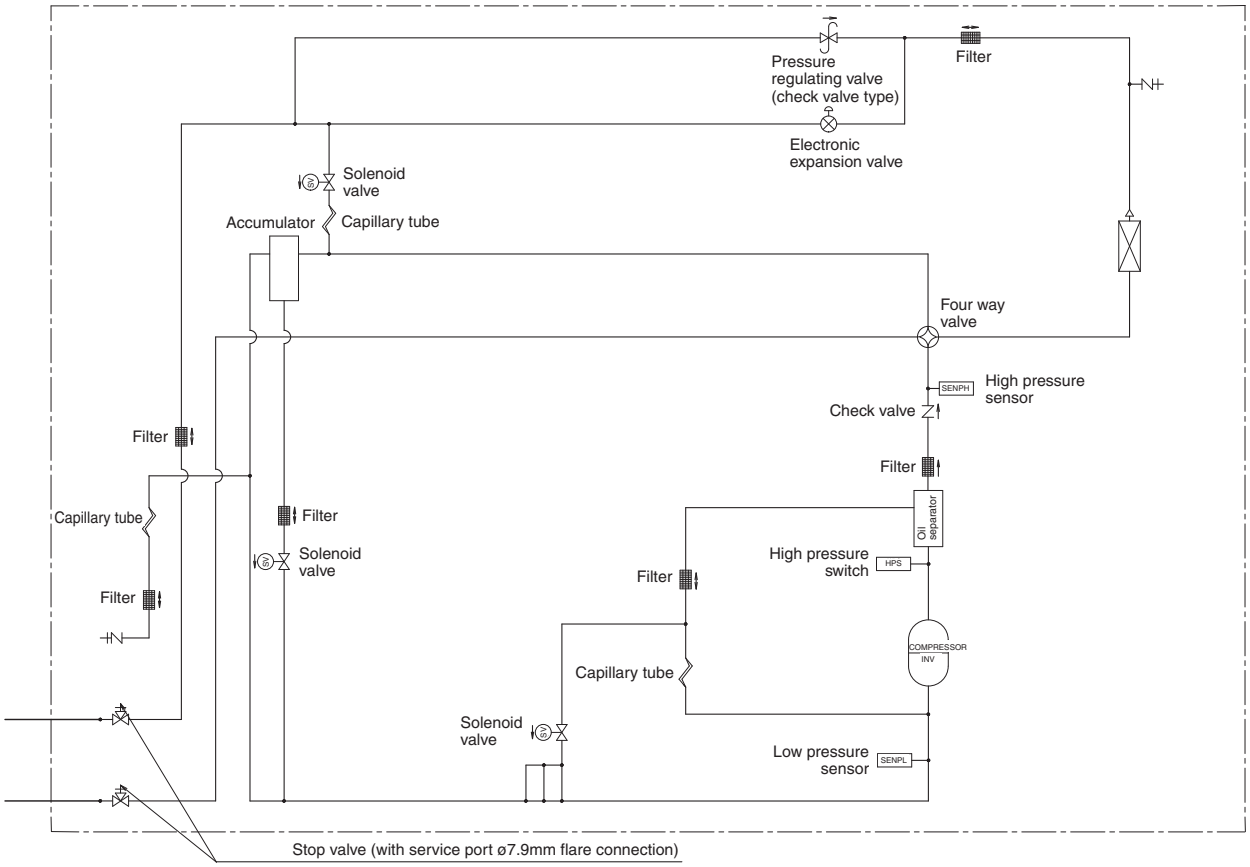

3D050782

ERQ 200 A7W1B

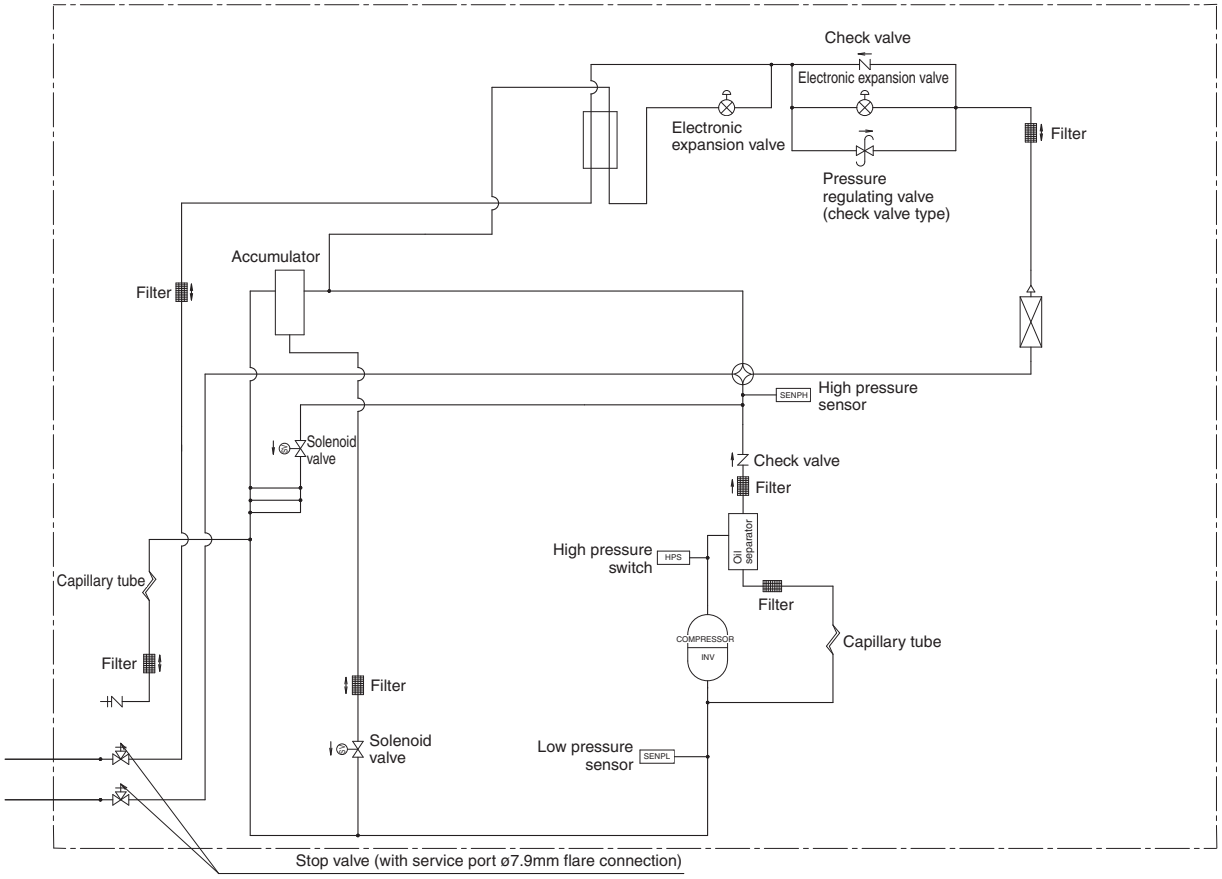

3D050783

ERQ 250 A7W1B

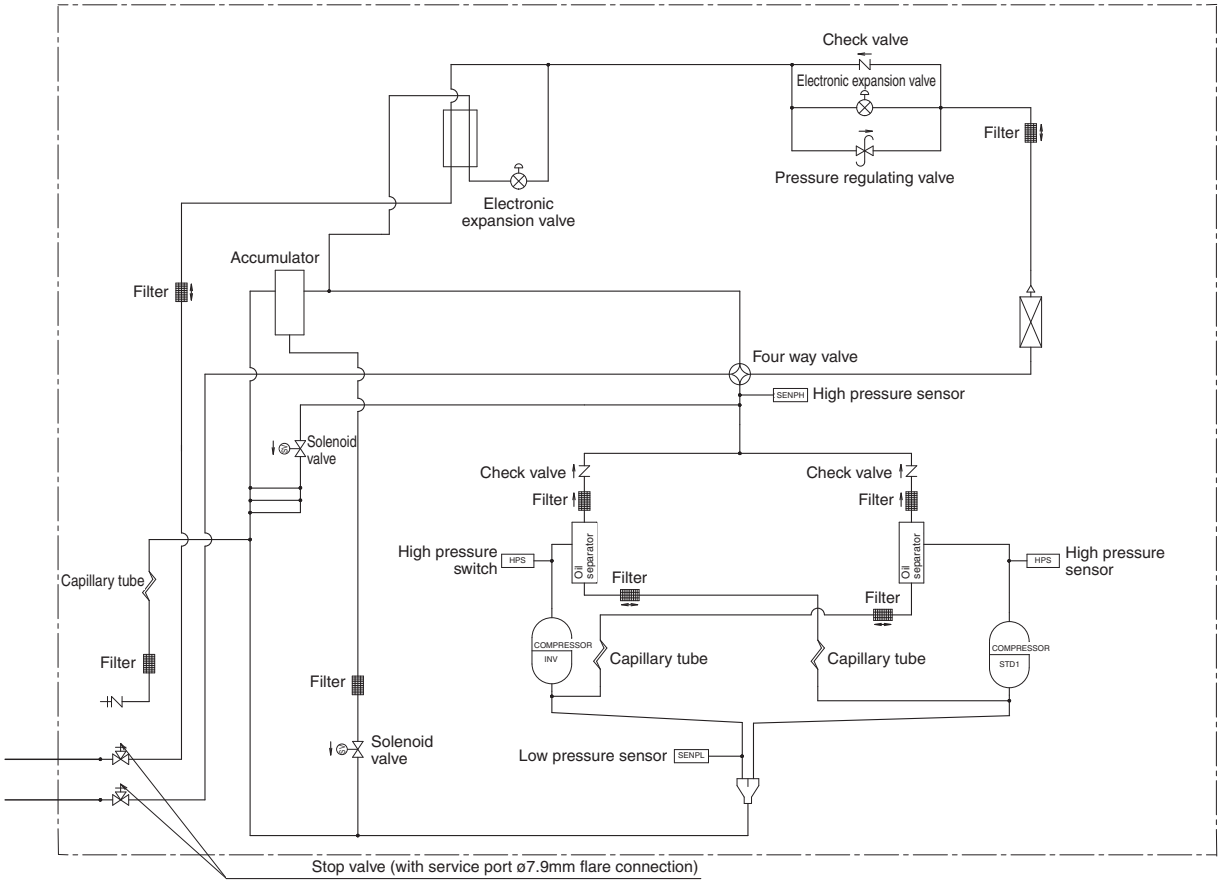

3D050784

2. Wiring Diagrams for Reference

2.1 Outdoor Unit

ERQ 125 A7W1B

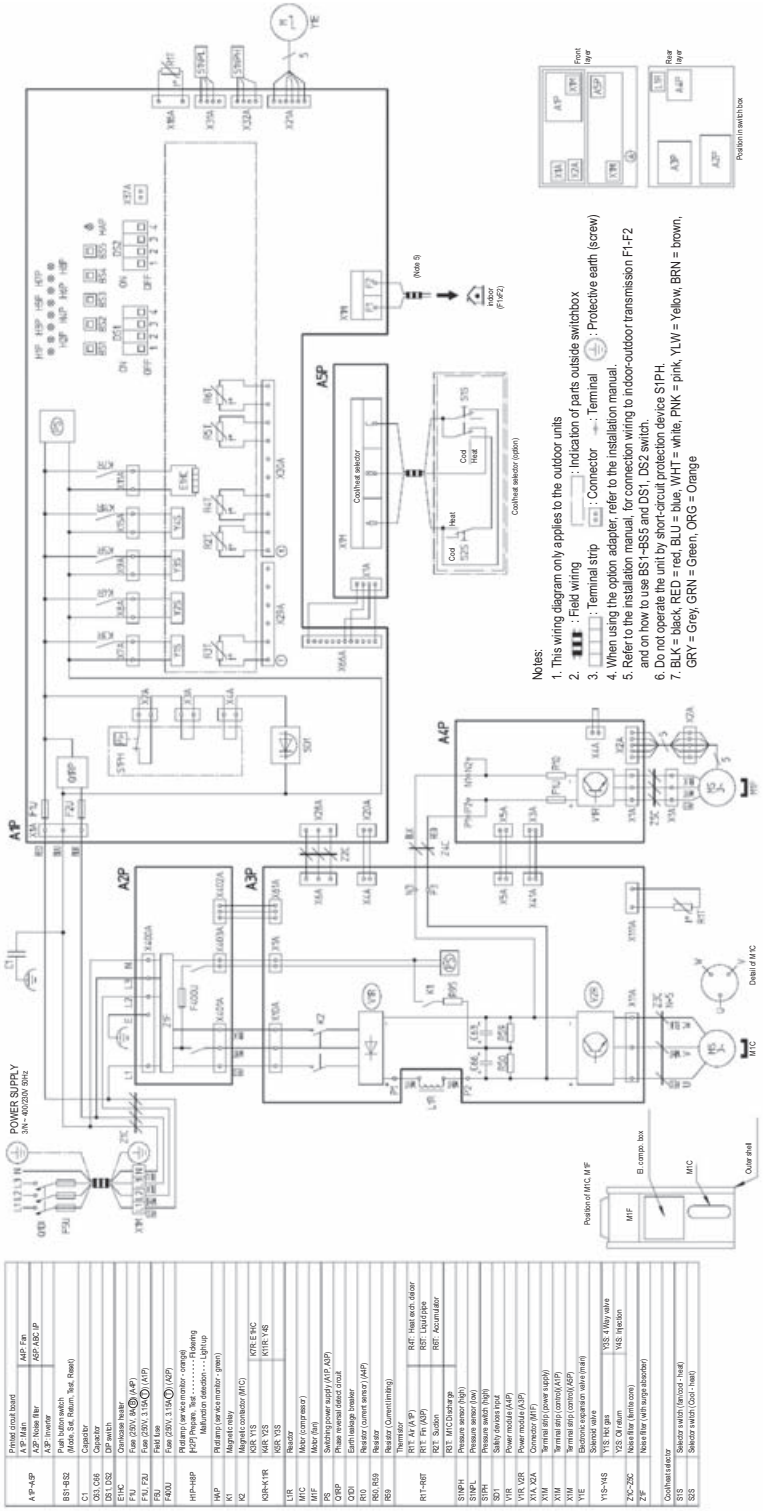

ERQ 200 A7W1B

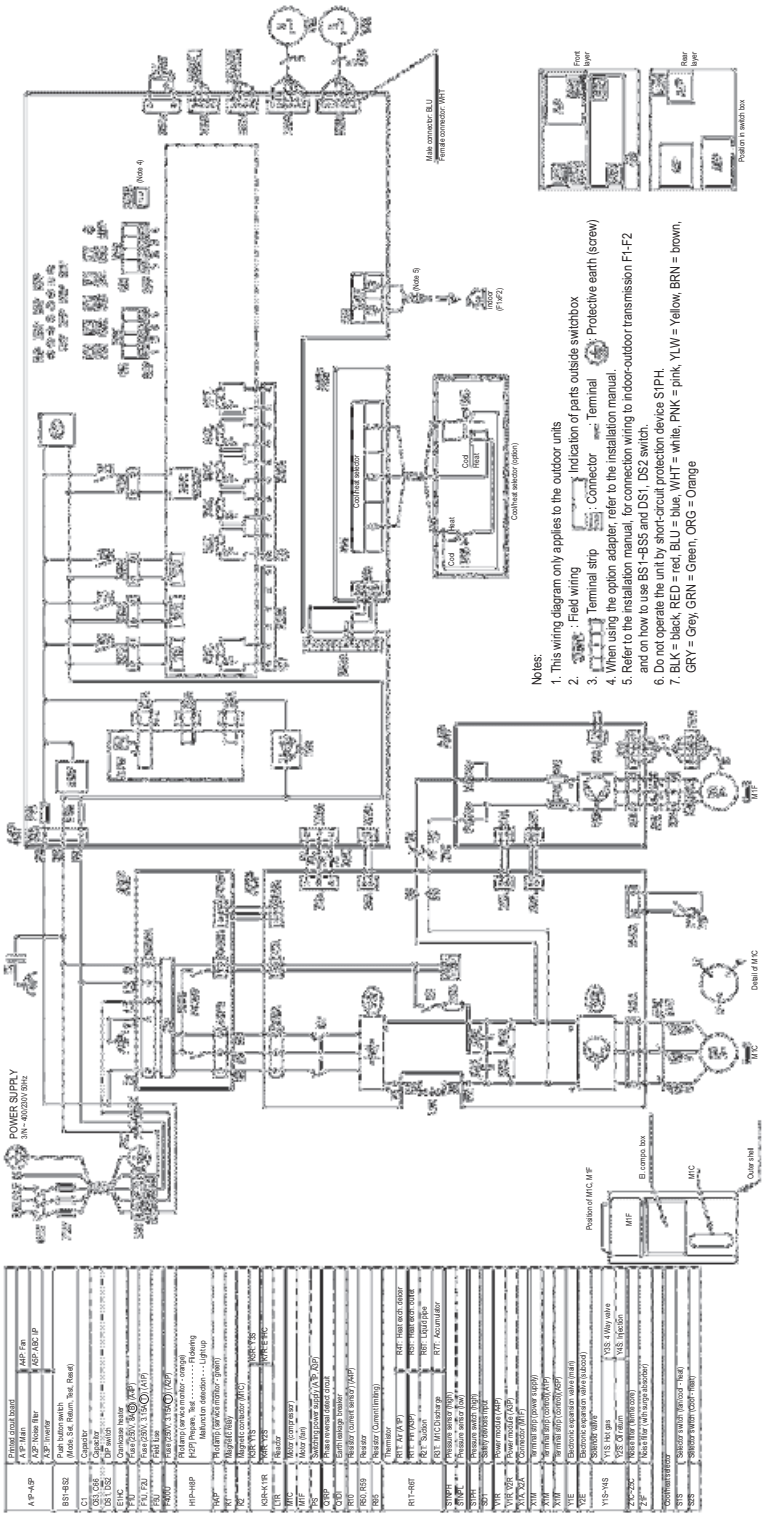

ERQ 250 A7W1B

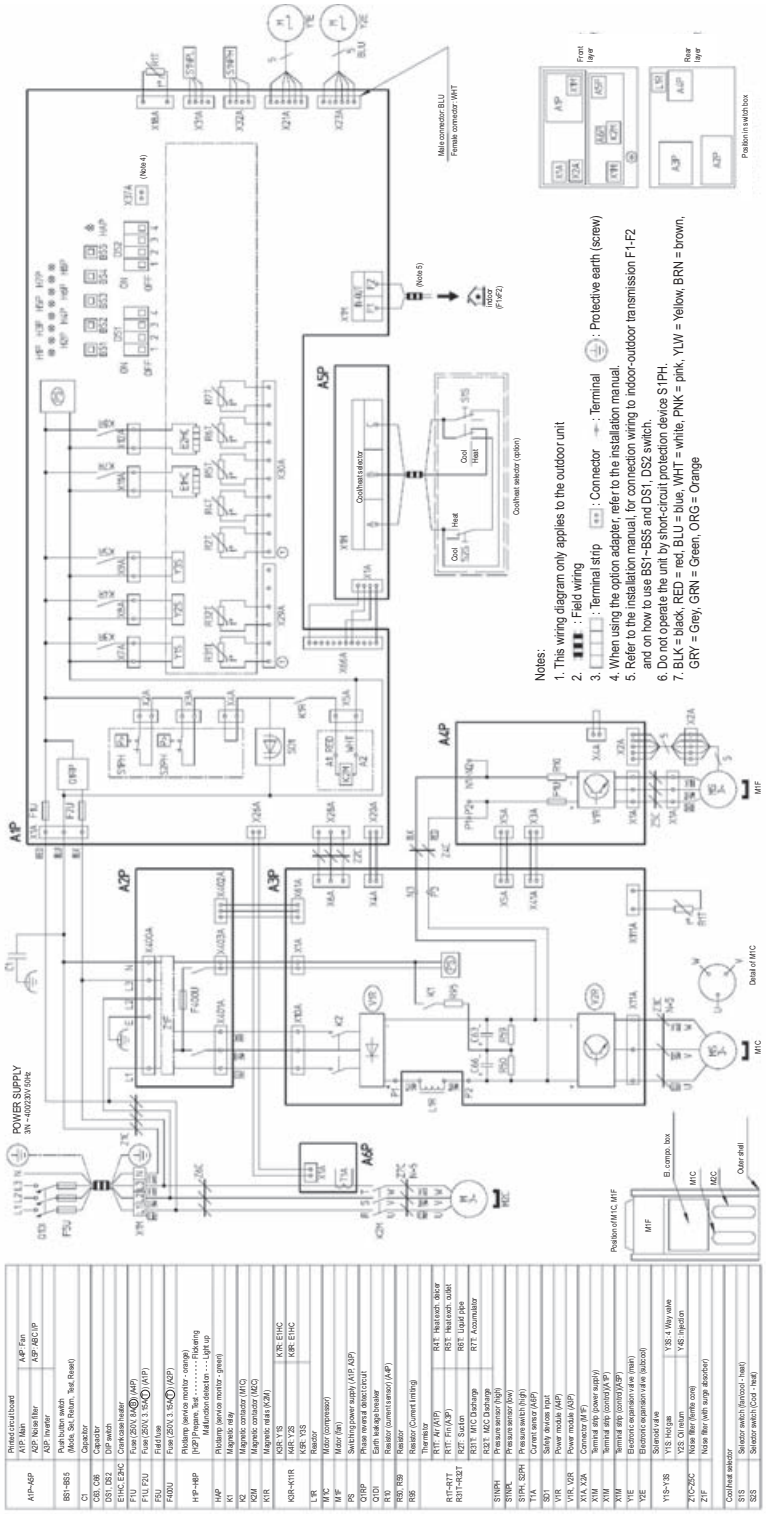

A1P~A6P	Printed circuit card
	A1P: Main
	A2P: Noise filter
	A3P: Inverter
BS1~BS5	Push button switch (Mode, Set, Return, Test, Reset)
C1	Capacitor
C5, C6	Capacitor
DS1, DS2	DIP switch
E1HC, E2HC	Crankcase heater
F1U	Fuse (250V, 5A) (A1P)
F1U, F2U	Fuse (250V, 3.15A) (A1P)
F3U	Fuse
F4U	Fuse (250V, 3.15A) (A3P)
H1P~H8P	Pilot lamp (service monitor - orange) (H2P:Program, Test · · · · · · · - Flickering Malfunction detection - - - - Light up
HAP	Pilot lamp (service monitor - green)
K1	Magnetic relay
K2	Magnetic contactor (M1C)
K3M	Magnetic contactor (M2C)
K1R	Magnetic relay (K3M)
K2R~K11R	K2R: Y1S, K11R: E1HC
K4R~K10R	K4R: Y3S, K10R: E2HC
L1R	Reactor
L2R	Reactor (compressor)
M1F	Motor (fan)
PS	Switching power supply (A1P, A3P)
Q1RP	Phase reversal detect circuit
Q1DI	Earth leakage breaker
R1, R2	Resistor (current sensor) (A4P)
R5, R6	Resistor
R35	Resistor (Current limiting)
R1T~R7T, R31T~R37T	Thermistor R1T: Fin (A3P) R2T: Heat exch. liquid side R3T: Fin (A4P) R4T: Heat exch. gas side R5T: Liquid pipe R6T: Suction R31T: M1C Discharge R37T: Accumulator R32T: M2C Discharge
S1NPH	Pressure sensor (high)
S1NPL	Pressure sensor (low)
S1PH, S2PH	Pressure switch (high)
T1A	Current sensor (A3P)
SS1	Safty devices input
V1R	Power module (A4P)
V1R, V2R	Power module (A3P)
X1A, X2A	Connector (M1F)
X1M	Terminal strip (power supply)
X2M	Terminal strip (control) (A1P)
X3M	Terminal strip (control) (A3P)
Y1E	Electronic expansion valve (main)
Y2E	Electronic expansion valve (subcool)
Y1S~Y3S	Solenoid valve Y1S: Hot gas Y2S: Oil return Y3S: Injection
Z1C~Z5C	Noise filter (ferrite core)
Z1F	Noise filter (with surge absorber)
Coolheat selector	
S1S	Selector switch (fan/cool - heat)
S3S	Selector switch (Cool - heat)

2.2 Field Wiring

ERQ 125/200/250 A7W1B

NOTES:

1. ALL WIRING, COMPONENTS AND MATERIALS TO BE PROCURED ON THE SITE MUST COMPLY WITH THE APPLICABLE LOCAL AND NATIONAL CODES.
2. USE COPPER CONDUCTORS ONLY.
3. FOR DETAILS, SEE WIRING DIAGRAM.
4. INSTALL A CIRCUIT BREAKER FOR SAFETY.
5. ALL FIELD WIRING AND COMPONENTS MUST BE PROVIDED BY A LICENCED ELECTRICIAN.
6. UNIT SHALL BE GROUNDED IN COMPLIANCE WITH THE APPLICABLE LOCAL AND NATIONAL CODES.
7. WIRING SHOWN ARE GENERAL POINTS-OF-CONNECTION GUIDES ONLY AND ARE NOT INTENDED FOR OR TO INCLUDE ALL DETAILS FOR A SPECIFIC INSTALLATION.
8. BE SURE TO INSTALL THE SWITCH AND THE FUSE TO THE POWER LINE OF EACH EQUIPMENT.
9. INSTALL THE MAIN SWITCH THAT CAN INTERRUPT ALL THE POWER SOURCES IN AN INTEGRATED MANNER BECAUSE THIS SYSTEM CONSISTS OF THE EQUIPMENT UTILIZING THE MULTIPLE POWER SOURCES.
10. FOR DETAILED CONTROL BOX SIDE CONNECTION, SEE CONTROL BOX MANUAL AND WIRING DIAGRAM.

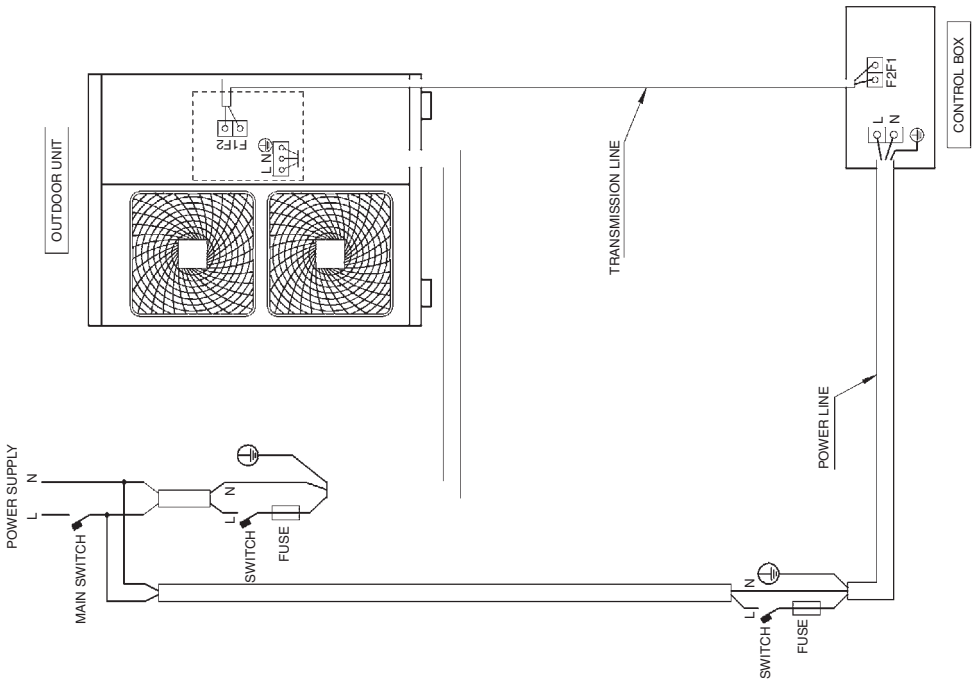

3. List of Electrical and Functional Parts

3.1 Outdoor Unit

3.1.1 ERQ 125/200 A7W1B

Item	Name		Symbol	Model	
				ERQ 125	ERQ 200
Compressor	Inverter	Type	M1C	JT1GCVDKYR@S	
		OC protection device		14.7A	
	STD 1	Type	M2C	—	
		OC protection device			
Fan motor		OC protection device	M1F	1.15A	3A
Electronic expansion valve (Main)			Y1E	Fully closed: 0pls	Fully open: 480pls
Electronic expansion valve (Subcool)			Y2E	—	Fully closed: 0pls Fully open: 480pls
Pressure protection	High pressure switch	For M1C	S1PH	OFF: $4.0^{+0}_{-0.12}$ MPa	ON: 3.0±0.15MPa
		For M2C	S2PH	—	
		For M3C	S3PH	—	
	Low pressure sensor		SLNPL	OFF: 0.07MPa	
Temperature protection	Discharge gas temperature protection (Discharge pipe thermistor)		R3T	OFF: 135°C	
	Inverter fin temperature protection (Radiator fin thermistor)		R1T	OFF: 93°C	
Others	Fuse	For main PC board	F1U	250V AC 10A Class B Time-lag 3.15A AC 250V	
			F2U	250V AC 10A Class B Time-lag 3.15A AC 250V	
		For Noise filter PC board	F1U	250V AC 5A Class B	

3.1.2 ERQ 250 A7W1B

Item	Name		Symbol	Model
				ERQ 250
Compressor	Inverter	Type	M1C	JT1GCVDKYR@S
		OC protection device		14.7A
	STD 1	Type	M2C	JT170G-KYE@T
		OC protection device		15.0A
Fan motor		OC protection device	M1F	3A
Electronic expansion valve (Main)			Y1E	Fully closed: 0pls Fully open: 480pls
Electronic expansion valve (Subcool)			Y2E	Fully closed: 0pls Fully open: 480pls
Pressure protection	High pressure switch	For M1C	S1PH	OFF: $4.0^{+0}_{-0.12}$ MPa ON: 3.0±0.15MPa
		For M2C	S2PH	OFF: $4.0^{+0}_{-0.12}$ MPa ON: 3.0±0.15MPa
		For M3C	S3PH	—
	Low pressure sensor		SLNPL	OFF: 0.07MPa
Temperature protection	Discharge gas temperature protection (Discharge pipe thermistor)		R3T	OFF: 135°C
	Inverter fin temperature protection (Radiator fin thermistor)		R1T	OFF: 93°C
Others	Fuse	For main PC board	F1U	250V AC 10A Class B Time-lag 3.15A AC 250V
			F2U	250V AC 10A Class B Time-lag 3.15A AC 250V
		For Noise filter PC board	F1U	250V AC 5A Class B

4. Option List

No	Item	ERQ125A7W1B	ERQ200A7W1B ERQ250A7W1B
1	COOL/HEAT SELECTOR	KRC19-26A6	
2	FIXING BOX	KJB111A	
3	CENTRAL DRAIN PAN KIT	KWC26B160	KWC26B280

Notes:

1. All options are kits.
2. Only 1 option per installation is needed.
3. One option per module is required.
4. The option should be installed inside the outdoor unit.

5. Thermistor Resistance / Temperature Characteristics

	AHU	For air suction	R1T
		For liquid pipe	R2T
		For gas pipe	R3T
Outdoor unit for fin thermistor R1T	Outdoor unit	For outdoor air	R1T
		For coil	R2T
		For suction pipe	R4T
		For Receiver gas pipe	R5T
		For Receiver outlet liquid pipe	R6T

(kΩ)

T°C	0.0
-10	-
-8	-
-6	88.0
-4	79.1
-2	71.1
0	64.1
2	57.8
4	52.3
6	47.3
8	42.9
10	38.9
12	35.3
14	32.1
16	29.2
18	26.6
20	24.3
22	22.2
24	20.3
26	18.5
28	17.0
30	15.6
32	14.2
34	13.1
36	12.0
38	11.1
40	10.3
42	9.5
44	8.8
46	8.2
48	7.6
50	7.0
52	6.7
54	6.0
56	5.5
58	5.2
60	4.79
62	4.46
64	4.15
66	3.87
68	3.61
70	3.37
72	3.15
74	2.94
76	2.75
78	2.51
80	2.41
82	2.26
84	2.12
86	1.99
88	1.87
90	1.76
92	1.65
94	1.55
96	1.46
98	1.38

T°C	0.0	0.5
-20	197.81	192.08
-19	186.53	181.16
-18	175.97	170.94
-17	166.07	161.36
-16	156.80	152.38
-15	148.10	143.96
-14	139.94	136.05
-13	132.28	128.63
-12	125.09	121.66
-11	118.34	115.12
-10	111.99	108.96
-9	106.03	103.18
-8	100.41	97.73
-7	95.14	92.61
-6	90.17	87.79
-5	85.49	83.25
-4	81.08	78.97
-3	76.93	74.94
-2	73.01	71.14
-1	69.32	67.56
0	65.84	64.17
1	62.54	60.96
2	59.43	57.94
3	56.49	55.08
4	53.71	52.38
5	51.09	49.83
6	48.61	47.42
7	46.26	45.14
8	44.05	42.98
9	41.95	40.94
10	39.96	39.01
11	38.08	37.18
12	36.30	35.45
13	34.62	33.81
14	33.02	32.25
15	31.50	30.77
16	30.06	29.37
17	28.70	28.05
18	27.41	26.78
19	26.18	25.59
20	25.01	24.45
21	23.91	23.37
22	22.85	22.35
23	21.85	21.37
24	20.90	20.45
25	20.00	19.56
26	19.14	18.73
27	18.32	17.93
28	17.54	17.17
29	16.80	16.45
30	16.10	15.76

T°C	0.0	0.5
30	16.10	15.76
31	15.43	15.10
32	14.79	14.48
33	14.18	13.88
34	13.59	13.31
35	13.04	12.77
36	12.51	12.25
37	12.01	11.76
38	11.52	11.29
39	11.06	10.84
40	10.63	10.41
41	10.21	10.00
42	9.81	9.61
43	9.42	9.24
44	9.06	8.88
45	8.71	8.54
46	8.37	8.21
47	8.05	7.90
48	7.75	7.60
49	7.46	7.31
50	7.18	7.04
51	6.91	6.78
52	6.65	6.53
53	6.41	6.53
54	6.65	6.53
55	6.41	6.53
56	6.18	6.06
57	5.95	5.84
58	5.74	5.43
59	5.14	5.05
60	4.96	4.87
61	4.79	4.70
62	4.62	4.54
63	4.46	4.38
64	4.30	4.23
65	4.16	4.08
66	4.01	3.94
67	3.88	3.81
68	3.75	3.68
69	3.62	3.56
70	3.50	3.44
71	3.38	3.32
72	3.27	3.21
73	3.16	3.11
74	3.06	3.01
75	2.96	2.91
76	2.86	2.82
77	2.77	2.72
78	2.68	2.64
79	2.60	2.55
80	2.51	2.47

Outdoor Unit Thermistors for Discharge Pipe (R3T, R31~ 33T)

(kΩ)

T°C	0.0	0.5	T°C	0.0	0.5	T°C	0.0	0.5
0	640.44	624.65	50	72.32	70.96	100	13.35	13.15
1	609.31	594.43	51	69.64	68.34	101	12.95	12.76
2	579.96	565.78	52	67.06	65.82	102	12.57	12.38
3	552.00	538.63	53	64.60	63.41	103	12.20	12.01
4	525.63	512.97	54	62.24	61.09	104	11.84	11.66
5	500.66	488.67	55	59.97	58.87	105	11.49	11.32
6	477.01	465.65	56	57.80	56.75	106	11.15	10.99
7	454.60	443.84	57	55.72	54.70	107	10.83	10.67
8	433.37	423.17	58	53.72	52.84	108	10.52	10.36
9	413.24	403.57	59	51.98	50.96	109	10.21	10.06
10	394.16	384.98	60	49.96	49.06	110	9.92	9.78
11	376.05	367.35	61	48.19	47.33	111	9.64	9.50
12	358.88	350.62	62	46.49	45.67	112	9.36	9.23
13	342.58	334.74	63	44.86	44.07	113	9.10	8.97
14	327.10	319.66	64	43.30	42.54	114	8.84	8.71
15	312.41	305.33	65	41.79	41.06	115	8.59	8.47
16	298.45	291.73	66	40.35	39.65	116	8.35	8.23
17	285.18	278.80	67	38.96	38.29	117	8.12	8.01
18	272.58	266.51	68	37.63	36.98	118	7.89	7.78
19	260.60	254.72	69	36.34	35.72	119	7.68	7.57
20	249.00	243.61	70	35.11	34.51	120	7.47	7.36
21	238.36	233.14	71	33.92	33.35	121	7.26	7.16
22	228.05	223.08	72	32.78	32.23	122	7.06	6.97
23	218.24	213.51	73	31.69	31.15	123	6.87	6.78
24	208.90	204.39	74	30.63	30.12	124	6.69	6.59
25	200.00	195.71	75	29.61	29.12	125	6.51	6.42
26	191.53	187.44	76	28.64	28.16	126	6.33	6.25
27	183.46	179.57	77	27.69	27.24	127	6.16	6.08
28	175.77	172.06	78	26.79	26.35	128	6.00	5.92
29	168.44	164.90	79	25.91	25.49	129	5.84	5.76
30	161.45	158.08	80	25.07	24.66	130	5.69	5.61
31	154.79	151.57	81	24.26	23.87	131	5.54	5.46
32	148.43	145.37	82	23.48	23.10	132	5.39	5.32
33	142.37	139.44	83	22.73	22.36	133	5.25	5.18
34	136.59	133.79	84	22.01	21.65	134	5.12	5.05
35	131.06	128.39	85	21.31	20.97	135	4.98	4.92
36	125.79	123.24	86	20.63	20.31	136	4.86	4.79
37	120.76	118.32	87	19.98	19.67	137	4.73	4.67
38	115.95	113.62	88	19.36	19.05	138	4.61	4.55
39	111.35	109.13	89	18.75	18.46	139	4.49	4.44
40	106.96	104.84	90	18.17	17.89	140	4.38	4.32
41	102.76	100.73	91	17.61	17.34	141	4.27	4.22
42	98.75	96.81	92	17.07	16.80	142	4.16	4.11
43	94.92	93.06	93	16.54	16.29	143	4.06	4.01
44	91.25	89.47	94	16.04	15.79	144	3.96	3.91
45	87.74	86.04	95	15.55	15.31	145	3.86	3.81
46	84.38	82.75	96	15.08	14.85	146	3.76	3.72
47	81.16	79.61	97	14.62	14.40	147	3.67	3.62
48	78.09	76.60	98	14.18	13.97	148	3.58	3.54
49	75.14	73.71	99	13.76	13.55	149	3.49	3.45
50	72.32	70.96	100	13.35	13.15	150	3.41	3.37

6. Pressure Sensor

$P_H = 1.38V-0.69$
$P_L = 0.57V-0.28$
P_H : High pressure (MPa)
V_L : Low pressure (MPa)
V : Voltage (V)

P_H : Detected Pressure [High Side] MP
P_L : Detected Pressure [Low Side] MP
V_H : Output Voltage [High Side] V_{DC}
V_L : Output Voltage [Low Side] V_{DC}

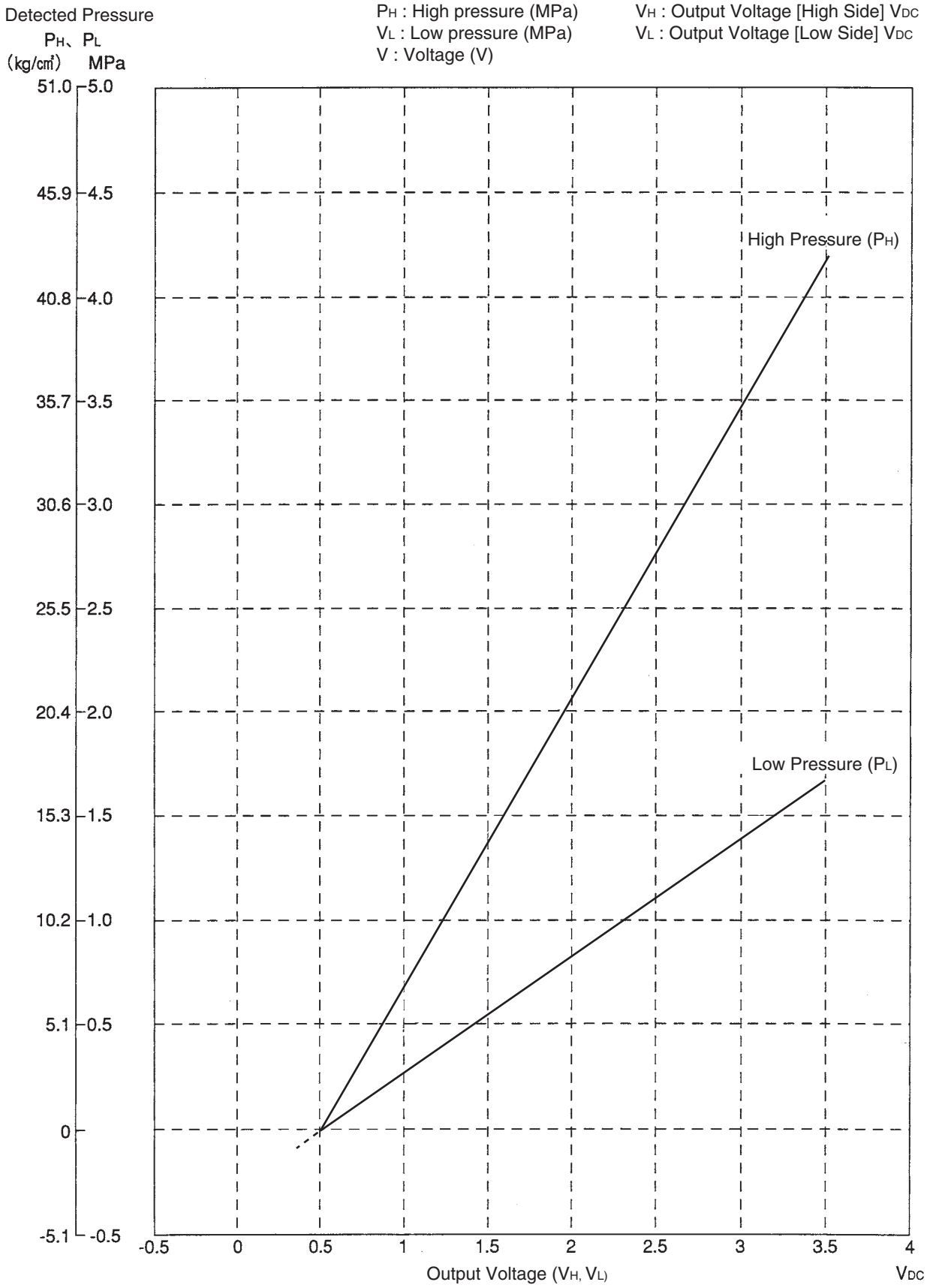

(V3053)

7. Method of Checking The Inverter's Power Transistors and Diode Modules

7.1 Method of Checking The Inverter's Power Transistors and Diode Modules

Checking failures in power semiconductors mounted on inverter PC board

Check the power semiconductors mounted on the inverter PC board by the use of a multiple tester.

<Items to be prepared>

- Multiple tester : Prepare the analog type of multiple tester.
  For the digital type of multiple tester, those with diode check function are available for the checking.

<Test points>

- Turn OFF the power supply. Then, after a lapse of 10 minutes or more, make measurement of resistance.

<Preparation>

- To make measurement, disconnect all connectors and terminals.

Inverter PC board

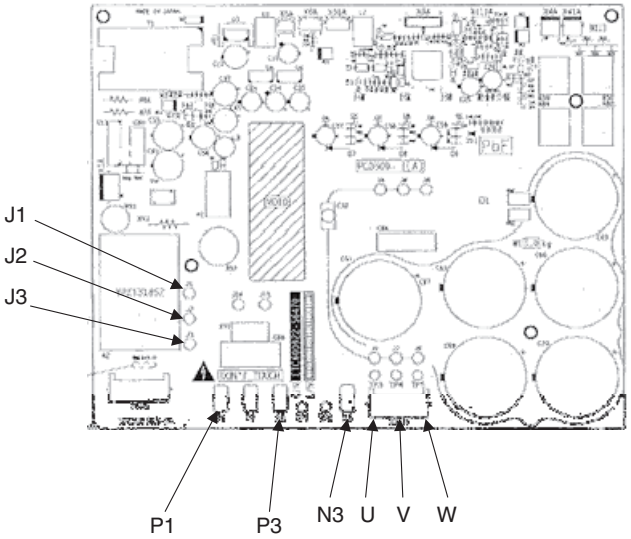

Electronic circuit

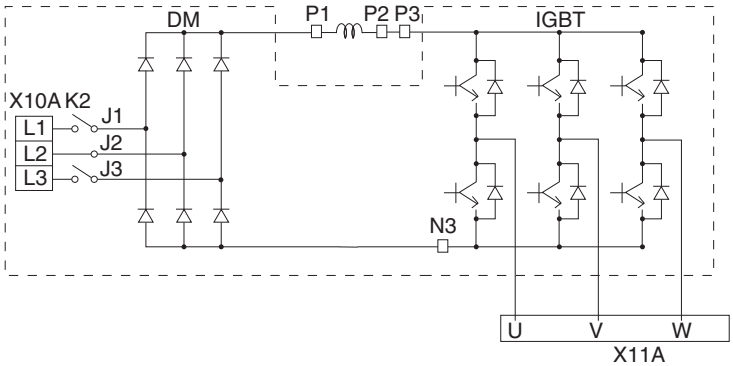

(V2895)

■ According to the checking aforementioned, it is probed that the malfunction results from the faulty inverter.The following section describes supposed causes of the faulty inverter.

- Faulty compressor (ground leakage)
- Faulty fan motor (ground leakage)
- Entry of conductive foreign particles
- Abnormal voltage (e.g. overvoltage, surge (thunder), or unbalanced voltage)

In order to replace the faulty inverter, be sure to check for the points aforementioned.

1. Power module checking

When using the analog type of multiple tester, make measurement in resistance measurement mode in the x1kΩ range.

No.	Measuring point		Criterion	Remark
	+	-		
1	P3	U	2 to 15kΩ	
2	P3	V		
3	P3	W		
4	U	P3	Not less than 15kΩ (including)	It may take time to determine the resistance due to capacitor charge or else.
5	V	P3		
6	W	P3		
7	N3	U		
8	N3	V		
9	N3	W		
10	U	N3	2 to 15kΩ	
11	V	N3		
12	W	N3		

When using the digital type of multiple tester, make measurement in diode check mode (→⊢).

No.	Measuring point		Criterion	Remark
	+	-		
1	P3	U	Not less than 1.2V (including)	It may take time to determine the voltage due to capacitor charge or else.
2	P3	V		
3	P3	W		
4	U	P3	0.3 to 0.7V	
5	V	P3		
6	W	P3		
7	N3	U		
8	N3	V		
9	N3	W		
10	U	N3	Not less than 1.2V (including)	It may take time to determine the voltage due to capacitor charge or else.
11	V	N3		
12	W	N3		

2. Diode module checking

When using the analog type of multiple tester, make measurement in resistance measurement mode in the x1kΩ range.

No.	Measuring point		Criterion	Remark
	+	-		
1	P1	J1	2 to 15kΩ	
2	P1	J2		
3	P1	J3		
4	J1	P1	Not less than 15kΩ (including)	It may take time to determine the resistance due to capacitor charge or else.
5	J2	P1		
6	J3	P1		
7	N3	J1		
8	N3	J2		
9	N3	J3		
10	J1	N3	2 to 15kΩ	
11	J2	N3		
12	J3	N3		

When using the digital type of multiple tester, make measurement in diode check mode (→⊢).

No.	Measuring point		Criterion	Remark
	+	-		
1	P1	J1	Not less than 1.2V (including)	It may take time to determine the voltage due to capacitor charge or else.
2	P1	J2		
3	P1	J3		
4	J1	P1	0.3 to 0.7V	
5	J2	P1		
6	J3	P1		
7	N3	J1		
8	N3	J2		
9	N3	J3		
10	J1	N3	Not less than 1.2V (including)	It may take time to determine the voltage due to capacitor charge or else.
11	J2	N3		
12	J3	N3		

Part 10 Precautions for New Refrigerant (R-410A)

1. Precautions for New Refrigerant (R-410A) 276
1.1 Outline 276
1.2 Refrigerant Cylinders.....278
1.3 Service Tools.....279

1. Precautions for New Refrigerant (R-410A)

1.1 Outline

1.1.1 About Refrigerant R-410A

■ Characteristics of new refrigerant, R-410A

1. Performance
   Almost the same performance as R-22 and R-407C
2. Pressure
   Working pressure is approx. 1.4 times more than R-22 and R-407C.
3. Refrigerant composition
   Few problems in composition control, since it is a Quasi-azeotropic mixture refrigerant.

	HFC units (Units using new refrigerants)		HCFC units
Refrigerant name	R-407C	R-410A	R-22
Composing substances	Non-azeotropic mixture of HFC32, HFC125 and HFC134a (*1)	Quasi-azeotropic mixture of HFC32 and JFC125 (*1)	Single-component refrigerant
Design pressure	3.2 MPa (gauge pressure) = 32.6 kgf/cm^2	4.0 MPa (gauge pressure) = 40.8 kgf/cm^2	2.75MPa (gauge pressure) = 28.0 kgf/cm^2
Refrigerant oil	Synthetic oil (Ether)		Mineral oil (Suniso)
Ozone destruction factor (ODP)	0	0	0.05
Combustibility	None	None	None
Toxicity	None	None	None

★1. Non-azeotropic mixture refrigerant: mixture of two or more refrigerants having different boiling points.

★2. Quasi-azeotropic mixture refrigerant: mixture of two or more refrigerants having similar boiling points.

★3. The design pressure is different at each product. Please refer to the installation manual for each product.

(Reference) 1 MPa ≒ 10.19716 kgf / cm^2

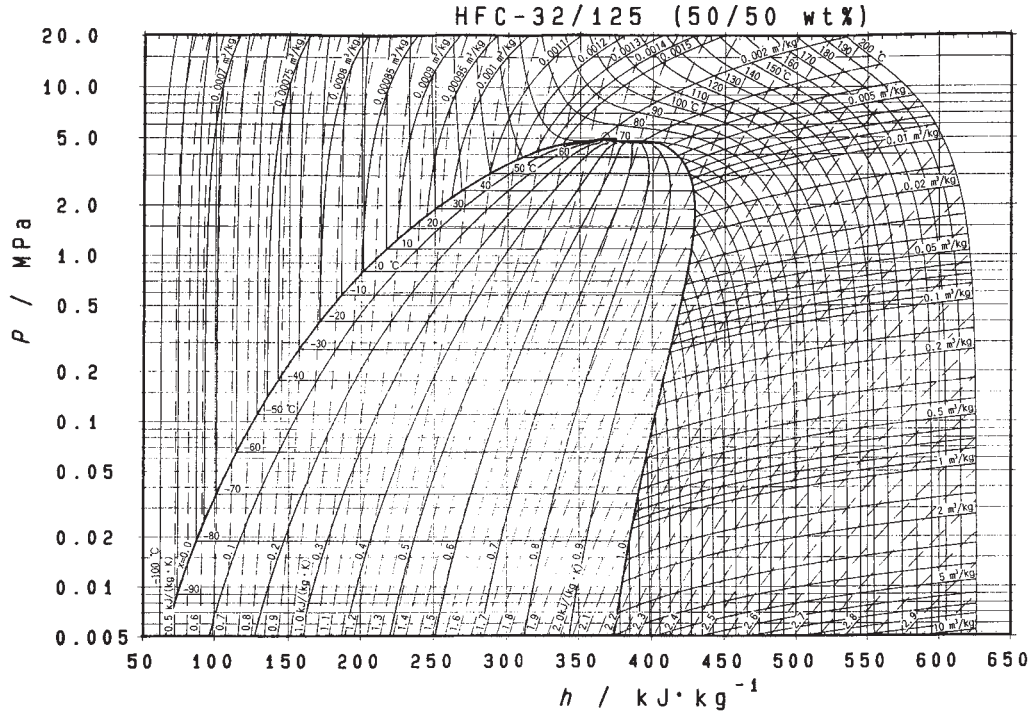

Pressure-Enthalpy curves of HFC-32/125 (50/50wt%)

■ Thermodynamic characteristic of R-410A

DAIREP ver2.0

Temperature (°C)	Steam pressure (kPa)		Density (kg/m³)		Specific heat at constant pressure (kJ/kgK)		Specific enthalpy (kJ/kg)		Specific entropy (kJ/KgK)	
	Liquid	Vapor	Liquid	Vapor	Liquid	Vapor	Liquid	Vapor	Liquid	Vapor
-70	36.13	36.11	1410.7	1.582	1.372	0.695	100.8	390.6	0.649	2.074
-68	40.83	40.80	1404.7	1.774	1.374	0.700	103.6	391.8	0.663	2.066
-66	46.02	45.98	1398.6	1.984	1.375	0.705	106.3	393.0	0.676	2.058
-64	51.73	51.68	1392.5	2.213	1.377	0.710	109.1	394.1	0.689	2.051
-62	58.00	57.94	1386.4	2.463	1.378	0.715	111.9	395.3	0.702	2.044
-60	64.87	64.80	1380.2	2.734	1.379	0.720	114.6	396.4	0.715	2.037
-58	72.38	72.29	1374.0	3.030	1.380	0.726	117.4	397.6	0.728	2.030
-56	80.57	80.46	1367.8	3.350	1.382	0.732	120.1	398.7	0.741	2.023
-54	89.49	89.36	1361.6	3.696	1.384	0.737	122.9	399.8	0.754	2.017
-52	99.18	99.03	1355.3	4.071	1.386	0.744	125.7	400.9	0.766	2.010
-51.58	101.32	101.17	1354.0	4.153	1.386	0.745	126.3	401.1	0.769	2.009
-50	109.69	109.51	1349.0	4.474	1.388	0.750	128.5	402.0	0.779	2.004
-48	121.07	120.85	1342.7	4.909	1.391	0.756	131.2	403.1	0.791	1.998
-46	133.36	133.11	1336.3	5.377	1.394	0.763	134.0	404.1	0.803	1.992
-44	146.61	146.32	1330.0	5.880	1.397	0.770	136.8	405.2	0.816	1.987
-42	160.89	160.55	1323.5	6.419	1.401	0.777	139.6	406.2	0.828	1.981
-40	176.24	175.85	1317.0	6.996	1.405	0.785	142.4	407.3	0.840	1.976
-38	192.71	192.27	1310.5	7.614	1.409	0.792	145.3	408.3	0.852	1.970
-36	210.37	209.86	1304.0	8.275	1.414	0.800	148.1	409.3	0.864	1.965
-34	229.26	228.69	1297.3	8.980	1.419	0.809	150.9	410.2	0.875	1.960
-32	249.46	248.81	1290.6	9.732	1.424	0.817	153.8	411.2	0.887	1.955
-30	271.01	270.28	1283.9	10.53	1.430	0.826	156.6	412.1	0.899	1.950
-28	293.99	293.16	1277.1	11.39	1.436	0.835	159.5	413.1	0.911	1.946
-26	318.44	317.52	1270.2	12.29	1.442	0.844	162.4	414.0	0.922	1.941
-24	344.44	343.41	1263.3	13.26	1.448	0.854	165.3	414.9	0.934	1.936
-22	372.05	370.90	1256.3	14.28	1.455	0.864	168.2	415.7	0.945	1.932
-20	401.34	400.06	1249.2	15.37	1.461	0.875	171.1	416.6	0.957	1.927
-18	432.36	430.95	1242.0	16.52	1.468	0.886	174.1	417.4	0.968	1.923
-16	465.20	463.64	1234.8	17.74	1.476	0.897	177.0	418.2	0.980	1.919
-14	499.91	498.20	1227.5	19.04	1.483	0.909	180.0	419.0	0.991	1.914
-12	536.58	534.69	1220.0	20.41	1.491	0.921	182.9	419.8	1.003	1.910
-10	575.26	573.20	1212.5	21.86	1.499	0.933	185.9	420.5	1.014	1.906
-8	616.03	613.78	1204.9	23.39	1.507	0.947	189.0	421.2	1.025	1.902
-6	658.97	656.52	1197.2	25.01	1.516	0.960	192.0	421.9	1.036	1.898
-4	704.15	701.49	1189.4	26.72	1.524	0.975	195.0	422.6	1.048	1.894
-2	751.64	748.76	1181.4	28.53	1.533	0.990	198.1	423.2	1.059	1.890
0	801.52	798.41	1173.4	30.44	1.543	1.005	201.2	423.8	1.070	1.886
2	853.87	850.52	1165.3	32.46	1.552	1.022	204.3	424.4	1.081	1.882
4	908.77	905.16	1157.0	34.59	1.563	1.039	207.4	424.9	1.092	1.878
6	966.29	962.42	1148.6	36.83	1.573	1.057	210.5	425.5	1.103	1.874
8	1026.5	1022.4	1140.0	39.21	1.584	1.076	213.7	425.9	1.114	1.870
10	1089.5	1085.1	1131.3	41.71	1.596	1.096	216.8	426.4	1.125	1.866
12	1155.4	1150.7	1122.5	44.35	1.608	1.117	220.0	426.8	1.136	1.862
14	1224.3	1219.2	1113.5	47.14	1.621	1.139	223.2	427.2	1.147	1.859
16	1296.2	1290.8	1104.4	50.09	1.635	1.163	226.5	427.5	1.158	1.855
18	1371.2	1365.5	1095.1	53.20	1.650	1.188	229.7	427.8	1.169	1.851
20	1449.4	1443.4	1085.6	56.48	1.666	1.215	233.0	428.1	1.180	1.847
22	1530.9	1524.6	1075.9	59.96	1.683	1.243	236.4	428.3	1.191	1.843
24	1615.8	1609.2	1066.0	63.63	1.701	1.273	239.7	428.4	1.202	1.839
26	1704.2	1697.2	1055.9	67.51	1.721	1.306	243.1	428.6	1.214	1.834
28	1796.2	1788.9	1045.5	71.62	1.743	1.341	246.5	428.6	1.225	1.830
30	1891.9	1884.2	1034.9	75.97	1.767	1.379	249.9	428.6	1.236	1.826
32	1991.3	1983.2	1024.1	80.58	1.793	1.420	253.4	428.6	1.247	1.822
34	2094.5	2086.2	1012.9	85.48	1.822	1.465	256.9	428.4	1.258	1.817
36	2201.7	2193.1	1001.4	90.68	1.855	1.514	260.5	428.3	1.269	1.813
38	2313.0	2304.0	989.5	96.22	1.891	1.569	264.1	428.0	1.281	1.808
40	2428.4	2419.2	977.3	102.1	1.932	1.629	267.8	427.7	1.292	1.803
42	2548.1	2538.6	964.6	108.4	1.979	1.696	271.5	427.2	1.303	1.798
44	2672.2	2662.4	951.4	115.2	2.033	1.771	275.3	426.7	1.315	1.793
46	2800.7	2790.7	937.7	122.4	2.095	1.857	279.2	426.1	1.327	1.788
48	2933.7	2923.6	923.3	130.2	2.168	1.955	283.2	425.4	1.339	1.782
50	3071.5	3061.2	908.2	138.6	2.256	2.069	287.3	424.5	1.351	1.776
52	3214.0	3203.6	892.2	147.7	2.362	2.203	291.5	423.5	1.363	1.770
54	3361.4	3351.0	875.1	157.6	2.493	2.363	295.8	422.4	1.376	1.764
56	3513.8	3503.5	856.8	168.4	2.661	2.557	300.3	421.0	1.389	1.757
58	3671.3	3661.2	836.9	180.4	2.883	2.799	305.0	419.4	1.403	1.749
60	3834.1	3824.2	814.9	193.7	3.191	3.106	310.0	417.6	1.417	1.741
62	4002.1	3992.7	790.1	208.6	3.650	3.511	315.3	415.5	1.433	1.732
64	4175.7	4166.8	761.0	225.6	4.415	4.064	321.2	413.0	1.450	1.722

1.2 Refrigerant Cylinders

■ Cylinder specifications

- The cylinder is painted refrigerant color (pink).
- The cylinder valve is equipped with a siphon tube.

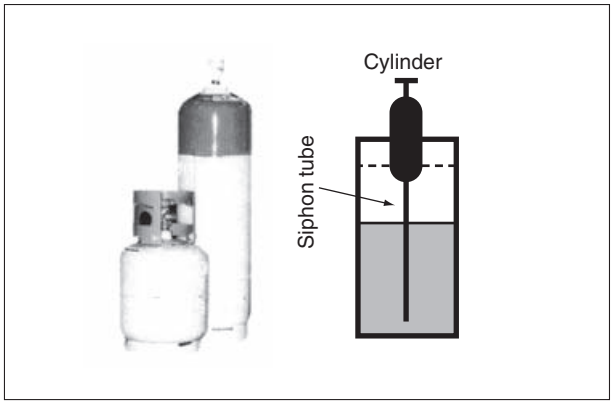

Refrigerant can be charged in liquid state with cylinder in upright position.

Caution: Do not lay cylinder on its side during charging, since it causes refrigerant in gas state to enter the system.

■ Handling of cylinders

(1) Laws and regulations

R-410A is liquefied gas, and the High-Pressure Gas Safety Law must be observed in handling them. Before using, refer to the High-Pressure Gas Safety Law.
The Law stipulates standards and regulations that must be followed to prevent accidents with high-pressure gases. Be sure to follow the regulations.

(2) Handing of vessels

Since R-410A is high-pressure gas, it is contained in high-pressure vessels.
Although those vessels are durable and strong, careless handling can cause damage that can lead to unexpected accidents. Do not drop vessels, let them fall, apply impact or roll them on the ground.

(3) Storage

Although R-410A is not flammable, it must be stored in a well-ventilated, cool and dark place in the same way as any other high-pressure gases.
It should also be noted that high-pressure vessels are equipped with safety devices that releases gas when the ambient temperature reaches more than a certain level (fusible plug melts) and when the pressure exceeds a certain level (spring-type safety valve operates).

1.3 Service Tools

R-410A is used under higher working pressure, compared to previous refrigerants (R-22,R-407C). Furthermore, the refrigerating machine oil has been changed from Suniso oil to Ether oil, and if oil mixing is occurred, sludge results in the refrigerants and causes other problems. Therefore, gauge manifolds and charge hoses that are used with a previous refrigerant (R-22,R-407C) can not be used for products that use new refrigerants.
Be sure to use dedicated tools and devices.

■ Tool compatibility

Tool	Compatibility			Reasons for change
	HFC		HCFC	
	R-410A	R-407C	R-22	
Gauge manifold Charge hose	×			•Do not use the same tools for R-22 and R-410A. •Thread specification differs for R-410A and R-407C.
Charging cylinder	×		○	•Weighting instrument used for HFCs.
Gas detector	○		×	•The same tool can be used for HFCs.
Vacuum pump (pump with reverse flow preventive function)	○			•To use existing pump for HFCs, vacuum pump adapter must be installed.
Weighting instrument	○			
Charge mouthpiece	×			•Seal material is different between R-22 and HFCs. •Thread specification is different between R-410A and others.
Flaring tool (Clutch type)	○			•For R-410A, flare gauge is necessary.
Torque wrench	○			•Torque-up for 1/2 and 5/8
Pipe cutter	○			
Pipe expander	○			
Pipe bender	○			
Pipe assembling oil	×			•Due to refrigerating machine oil change. (No Suniso oil can be used.)
Refrigerant recovery device	Check your recovery device.			
Refrigerant piping	See the chart below.			•Only ϕ19.1 is changed to 1/2H material while the previous material is "O".

As for the charge mouthpiece and packing, 1/2UNF20 is necessary for mouthpiece size of charge hose.

■ Copper tube material and thickness

Pipe size	Ve-up		Ve-upII	
	R-407C		R-410A	
	Material	Thickness t (mm)	Material	Thickness t (mm)
ϕ6.4	O	0.8	O	0.8
ϕ9.5	O	0.8	O	0.8
ϕ12.7	O	0.8	O	0.8
ϕ15.9	O	1.0	O	1.0
ϕ19.1	O	1.0	1/2H	1.0
ϕ22.2	1/2H	1.0	1/2H	1.0
ϕ25.4	1/2H	1.0	1/2H	1.0
ϕ28.6	1/2H	1.0	1/2H	1.0
ϕ31.8	1/2H	1.2	1/2H	1.1
ϕ38.1	1/2H	1.4	1/2H	1.4
ϕ44.5	1/2H	1.6	1/2H	1.6

* O: Soft (Annealed)
H: Hard (Drawn)

1. Flaring tool

■ Specifications

- Dimension A

Unit:mm

Nominal size	Tube O.D.	$A^{+0}_{-0.4}$	
	Do	Class-2 (R-410A)	Class-1 (Conventional)
1/4	6.35	9.1	9.0
3/8	9.52	13.2	13.0
1/2	12.70	16.6	16.2
5/8	15.88	19.7	19.4
3/4	19.05	24.0	23.3

■ Differences

- Change of dimension A

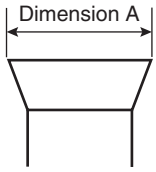

For class-1: R-407C
For class-2: R-410A

Conventional flaring tools can be used when the work process is changed.
(change of work process)
Previously, a pipe extension margin of 0 to 0.5mm was provided for flaring. For R-410A air conditioners, perform pipe flaring with a pipe extension margin of 1.0 to 1.5mm.
(For clutch type only)
Conventional tool with pipe extension margin adjustment can be used.

2. Torque wrench

■ Specifications

- Dimension B Unit:mm

Nominal size	Class-1	Class-2	Previous
1/2	24	26	24
5/8	27	29	27

No change in tightening torque
No change in pipes of other sizes

■ Differences

- Change of dimension B
  Only 1/2", 5/8" are extended

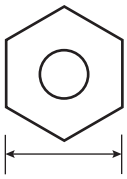

For class-1: R-407C
For class-2: R-410A

3. Vacuum pump with check valve

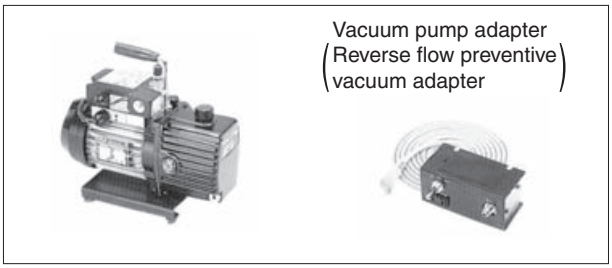

■ Specifications

- Discharge speed
  50 l/min (50Hz)
  60 l/min (60Hz)
- Suction port UNF7/16-20(1/4 Flare)
  UNF1/2-20(5/16 Flare) with adapter

● Maximum degree of vacuum
Select a vacuum pump which is able to keep the vacuum degree of the system in excess of –100.7 kPa (5 torr – 755 mmHg).

■ Differences

- Equipped with function to prevent reverse oil flow
- Previous vacuum pump can be used by installing adapter.

4. Leak tester

■ Specifications
- Hydrogen detecting type, etc.
- Applicable refrigerants
  R-410A, R-407C, R-404A, R-507A, R-134a, etc.

■ Differences
- Previous testers detected chlorine. Since HFCs do not contain chlorine, new tester detects hydrogen.

5. Refrigerant oil (Air compal)

■ Specifications
- Contains synthetic oil, therefore it can be used for piping work of every refrigerant cycle.
- Offers high rust resistance and stability over long period of time.

■ Differences
- Can be used for R-410A and R-22 units.

6. Gauge manifold for R-410A

■ Specifications
- High pressure gauge
  - 0.1 to 5.3 MPa (-76 cmHg to 53 kg/cm^2)
- Low pressure gauge
  - 0.1 to 3.8 MPa (-76 cmHg to 38 kg/cm^2)
- 1/4" → 5/16" (2min → 2.5min)
- No oil is used in pressure test of gauges.
  → For prevention of contamination

- Temperature scale indicates the relationship between pressure and temperature in gas saturated state.

■ Differences
- Change in pressure
- Change in service port diameter

7. Charge hose for R-410A

(Hose with ball valve)

■ Specifications
- Working pressure 5.08 MPa (51.8 kg/cm^2)
- Rupture pressure 25.4 MPa (259 kg/cm^2)
- Available with and without hand-operate valve that prevents refrigerant from outflow.

■ Differences
- Pressure proof hose
- Change in service port diameter
- Use of nylon coated material for HFC resistance

8. Charging cylinder

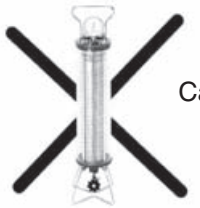

Can not be used

■ Specifications
- Use weigher for refrigerant charge listed below to charge directly from refrigerant cylinder.

■ Differences
- The cylinder can not be used for mixed refrigerant since mixing ratio is changed during charging.

  When R-410A is charged in liquid state using charging cylinder, foaming phenomenon is generated inside charging cylinder.

9. Weigher for refrigerant charge

■ Specifications
- High accuracy
  TA101A (for 10-kg cylinder) = ± 2g
  TA101B (for 20-kg cylinder) = ± 5g
- Equipped with pressure-resistant sight glass to check liquid refrigerant charging.
- A manifold with separate ports for HFCs and previous refrigerants is equipped as standard accessories.

■ Differences
- Measurement is based on weight to prevent change of mixing ratio during charging.

10. Charge mouthpiece

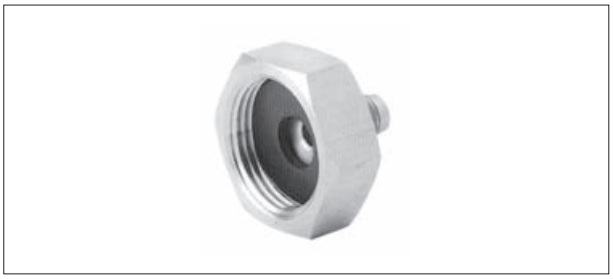

■ Specifications
- For R-410A, 1/4"→ 5/16" (2min → 2.5min)
- Material is changed from CR to H-NBR.

■ Differences
- Change of thread specification on hose connection side (For the R-410A use)
- Change of sealer material for the HFCs use.

Index

A
A0 185
A1 186
A3 187
A6 189
A9 190
Abnormal Discharge Pipe Temperature 211
Abnormal Outdoor Fan Motor Signal 213
About Refrigerant R-410A 276
Actuation of High Pressure Switch 199
Actuation of Low Pressure Sensor 201
AF 192
AJ 193

B
Basic Control 24

C
C4 194
C5 195
C9 196
Check No. 2 255
Check Operation not Executed 243
CJ 197
Compressor Motor Overcurrent/Lock 205
Compressor PI Control 25
Contents of Control Modes 113
Cool / Heat Mode Switching 126
Current Sensor Malfunction 215

D
Defrosting Operation 32
Demand Operation 43
Discharge Pipe Protection Control 38
Display “Under Centralized Control” Blinks (Repeats Single Blink) 255
Drain Level above Limit 192

E
E1 198
E3 199
E4 201
E5 203
E6 205
E7 206
E9 209
Emergency Operation 41
Error of External Protection Device 185

F
F3 211
F6 212
Fan Motor (M1F) Lock, Overload 189
Faulty Field Setting after Replacing Main PC Board or Faulty Combination of PC Board 237
Field Setting 106
Field Setting from Outdoor Unit 114
List of Field Setting Items 114
Setting by pushbutton switches 118
Field Setting from Remote Controller 106
Freeze Prevention 46
Functional Parts Layout 18
RXYQ10P, 12P 20
RXYQ5P 18
RXYQ8P 19

H
H7 213
H9 214
Heating Operation Prohibition 43
High Pressure Protection Control 36

I
Improper Combination of AHU and Outdoor Units, AHUs and Remote Controller 248
Injection Control (only for RXYQ5P) 40
Inverter Compressor Abnormal 225
Inverter Compressor Motor Lock 203
Inverter Current Abnormal 227
Inverter Over-Ripple Protection 234
Inverter Protection Control 39
Inverter Start up Error 229

J
J2 215
J3 216
J5 217
J6 218
J7 219
J9 220
JA 221
JC 222

L
L4 223
L5 225
L8 227
L9 229
LC 231
List of Electrical and Functional Parts 267
Outdoor Unit 267
Low Pressure Drop Due to Refrigerant Shortage or Electronic Expansion Valve Failure 238
Low Pressure Protection Control 37

M
Malfunction code indication by outdoor unit PC board 181
Malfunction of Capacity Determination Device 193
Malfunction of Discharge Pipe Thermistor (R3, R31~33T) 216
Malfunction of Drain Level Control System (S1L) 187
Malfunction of High Pressure Sensor 221
Malfunction of Inverter Radiating Fin Temperature Rise 223
Malfunction of Inverter Radiating Fin Temperature

Rise Sensor 235
Malfunction of Liquid Pipe Thermistor (R6T) 219
Malfunction of Low Pressure Sensor 222
Malfunction of Moving Part of Electronic Expansion Valve (Y1E) 190
Malfunction of Moving Part of Electronic Expansion Valve (Y1E, Y2E) 209
Malfunction of Outdoor Unit Fan Motor 206
Malfunction of Subcooling Heat Exchanger Gas Pipe Thermistor (R5T) 220
Malfunction of System, Refrigerant System Address Undefined 251
Malfunction of Thermistor (R1T) for Suction Air ...196
Malfunction of Thermistor (R2T) for Heat Exchanger 194
Malfunction of Thermistor (R2T), (R7T) for Suction Pipe 217
Malfunction of Thermistor (R3T) for Gas Pipes 195
Malfunction of Thermistor (R4T) for Outdoor Unit Heat Exchanger 218
Malfunction of Thermostat Sensor in Remote Controller 197
Malfunction of Transmission Between AHU and Outdoor Units in the Same System 247
Malfunction of Transmission Between AHUs 244
Malfunction of Transmission Between Inverter and Control PC Board 231
Malfunction of Transmission Between Remote Controller and AHU 246
Method of Checking The Inverter's Power Transistors and Diode Modules 273

O

Oil Return Operation 30
Operation Lamp Blinks 253
Operation Mode 23
Operation When Power is Turned On 104
Option List 269
Other Control 41
Outdoor Unit Fan Control in Cooling Operation 28
Outdoor Unit PC Board Layout 105
Outdoor Unit Thermistors for Discharge Pipe 271

P

P1 234
P4 235
PC Board Defect 186, 198
PJ 237
Power Supply Insufficient or Instantaneous Failure ... 240
Precautions for New Refrigerant (R-410A) 276
Pressure Sensor 272
Procedure and Outline 91
Protection Control 36
Pump-down Residual Operation 33

R

Refrigerant Circuit 12
RXYQ10P, 12P 16
RXYQ5P 12
RXYQ8P 14
Refrigerant Cylinders 278
Refrigerant Overcharged 212
Restart Standby 34
Reverse Phase, Open Phase 239

S

Service Tools 279
Setting by pushbutton switches 118
Setting of Low Noise Operation and Demand Operation 128
Special Control 29
Specifications 8
Outdoor Units 8
Standby 34
Startup Control 29
STD Compressor Overload Protection 40
Step Control of Outdoor Unit Fans 27
Stopping Operation 35
Symptom-based Troubleshooting 171
System is not Set yet 250

T

Test Operation 90
Procedure and Outline 91
Thermistor Resistance / Temperature Characteristics 270
Thermostat Sensor in Remote Controller 44
Troubleshooting (OP: Unified ON/OFF Controller) 253

U

U0 238
U1 239
U2 240
U3 243
U4 244
U5 246
U9 247
UA 248
UF 250
UH 251

Drawings & Flow Charts

A
Abnormal Discharge Pipe Temperature 211
Abnormal Outdoor Fan Motor Signal 213
Actuation of High Pressure Switch 199
Actuation of Low Pressure Sensor 201

C
Check No. 1 255
Check No. 2 255
Check Operation not Executed 243
Compressor Motor Overcurrent/Lock 205
Contents of Control Modes
How to Select Operation Mode 114
Current Sensor Malfunction 215

D
Display “Under Centralized Control” Blinks (Repeats Single Blink) 255
Display of sensor and address data 177
Drain Level above Limit 192

E
Error of External Protection Device 185

F
Fan Motor (M1F) Lock, Overload 189
Faulty Field Setting after Replacing Main PC Board or Faulty Combination of PC Board 237
Field Setting from Outdoor Unit 114
Mode changing procedure 118
Setting by dip switches 116
Freeze Prevention 46
Functional Parts Layout 18

I
Improper Combination of AHU and Outdoor Units, AHUs and Remote Controller 248
Inverter Compressor Abnormal 225
Inverter Compressor Motor Lock 203
Inverter Current Abnormal 227
Inverter Over-Ripple Protection 234
Inverter Start up Error 229

L
Low Pressure Drop Due to Refrigerant Shortage or Electronic Expansion Valve Failure 238

M
Malfunction of Capacity Determination Device 193
Malfunction of Discharge Pipe Thermistor (R3, R31~33T) 216
Malfunction of Drain Level Control System (S1L) 187
Malfunction of High Pressure Sensor 221
Malfunction of Inverter Radiating Fin Temperature Rise 223
Malfunction of Inverter Radiating Fin Temperature Rise Sensor 235
Malfunction of Liquid Pipe Thermistor (R6T) 219
Malfunction of Low Pressure Sensor 222
Malfunction of Moving Part of Electronic Expansion Valve (Y1E) 190
Malfunction of Moving Part of Electronic Expansion Valve (Y1E, Y2E) 209
Malfunction of Outdoor Unit Fan Motor 206
Malfunction of Subcooling Heat Exchanger Gas Pipe Thermistor (R5T) 220
Malfunction of System, Refrigerant System Address Undefined 251
Malfunction of Thermistor (R1T) for Outdoor Air . 214
Malfunction of Thermistor (R1T) for Suction Air .. 196
Malfunction of Thermistor (R2T) for Heat Exchanger 194
Malfunction of Thermistor (R2T), (R7T) for Suction Pipe 217
Malfunction of Thermistor (R3T) for Gas Pipes ... 195
Malfunction of Thermistor (R4T) for Outdoor Unit Heat Exchanger 218
Malfunction of Thermostat Sensor in Remote Controller 197
Malfunction of Transmission Between AHU and Outdoor Units in the Same System 247
Malfunction of Transmission Between AHUs 244
Malfunction of Transmission Between Inverter and Control PC Board 231
Malfunction of Transmission Between Remote Controller and AHU 246
Method of Checking The Inverter’s Power Transistors and Diode Modules 273

O
Operation Lamp Blinks 253
Outdoor Unit PC Board Layout 105

P
PC Board Defect 186, 198
Piping Diagrams 260
Outdoor Unit 260
Power Supply Insufficient or Instantaneous Failure .. 240
Pressure Sensor 272

R
Refrigerant Overcharged 212
Remote Controller Self-Diagnosis Function 178
Remote Controller Service Mode 176
Reverse Phase, Open Phase 239
RXYQ10P, 12P 20
RXYQ5P 18
RXYQ8P 19

S
Self-diagnosis by Wired Remote Controller 175
Setting of Low Noise Operation and Demand Operation 128
Image of operation in the case of A 129, 131
Image of operation in the case of A and B ... 129,

131
Image of operation in the case of B 129, 131
Simplified Remote Controller 107
BRC2A51, BRC2C51 107
System is not Set yet 250

T

Test Operation 90
Thermostat Sensor in Remote Controller 44
Cooling 44
Heating 45
Torque wrench 281
Troubleshooting (OP: Unified ON/OFF Controller) ....
253
Troubleshooting by Remote Controller 174

W

Weigher for refrigerant charge 284
Wired Remote Controller 106
Wiring Diagrams for Reference 263
Field Wiring 266
Outdoor Unit 263

In all of us,
a green heart

Daikin's unique position as a manufacturer of air conditioning equipment, compressors and refrigerants has led to its close involvement in environmental issues. For several years Daikin has had the intension to become a leader in the provision of products that have limited impact on the environment. This challenge demands the eco design and development of a wide range of products and an energy management system, resulting in energy conservation and a reduction of waste.

Daikin Europe N.V. is approved by LRQA for its Quality Management System in accordance with the ISO9001 standard. ISO9001 pertains to quality assurance regarding design, development, manufacturing as well as to services related to the product.

ISO14001 assures an effective environmental management system in order to help protect human health and the environment from the potential impact of our activities, products and services and to assist in maintaining and improving the quality of the environment.

Daikin units comply with the European regulations that guarantee the safety of the product.

Daikin Europe N.V. is participating in the EUROVENT Certification Programme. Products are as listed in the EUROVENT Directory of Certified Products.

"The present publication is drawn up by way of information only and does not constitute an offer binding upon Daikin Europe N.V.. Daikin Europe N.V. has compiled the content of this publication to the best of its knowledge. No express or implied warranty is given for the completeness, accuracy, reliability or fitness for particular purpose of its content and the products and services presented therein. Specifications are subject to change without prior notice. Daikin Europe N.V. explicitly rejects any liability for any direct or indirect damage, In the broadest sense, arising from or related to the use and/or interpretation of this publication. All content is copyrighted by Daikin Europe N.V.."

DAIKIN EUROPE N.V.
Naamloze Vennootschap
Zandvoordestraat 300
B-8400 Oostende - Belgium
www.daikin.eu
BE 0412 120 336
RPR Oostende

ESiEN09-06 • 02/2010 • Copyright Daikin
Prepared in Belgium by Lannoo (www.lannooprint.be), a company whose concern for the environment is set in the EMAS and ISO 14001 systems.
Responsible Editor: Daikin Europe N.V., Zandvoordestraat 300, B- 8400 Oostende

ESiEN09-06