ESiEN05-04

Service Manual

R-410A Sky-Air Indoor

www.daikin.eu

DAIKIN

ESiEN05-04

Service Manual

R-410A Sky-Air Indoor

www.daikin.eu

Table of Contents

1 Introduction

1.1 About This Manual ..... i–i
1.2 Combination Overview ..... i–ii

Part 1
System Outline

1 General Outline

1.1 What Is in This Chapter? 1–3
1.2 FCQ35, 50, 60, 71B 1–4
1.3 FCQ100, 125B 1–6
1.4 FCQ71D 1–8
1.5 FCQ100, 125, 140D 1–10
1.6 FFQ25, 35, 50, 60B 1–12
1.7 FBQ35, 50B 1–14
1.8 FBQ60, 71B 1–16
1.9 FBQ100, 125B 1–18
1.10 FDQ125B 1–20
1.11 FDQ200, 250B 1–22
1.12 FHQ35, 50B 1–24
1.13 FHQ60, 71B 1–26
1.14 FHQ100B 1–28
1.15 FHQ125B 1–30
1.16 FUQ71B 1–32
1.17 FUQ100, 125B 1–34
1.18 FAQ71B 1–36
1.19 FAQ100B 1–38
1.20 FDEQ71, 100B 1–40
1.21 FDEQ125B 1–42

2 Specifications

2.1 What Is in This Chapter? 1–45
2.2 FCQ – B 1–46
2.3 FCQ – D 1–47
2.4 FFQ – B 1–48
2.5 FBQ – B 1–49
2.6 FDQ – B 1–50
2.7 FHQ – B 1–51
2.8 FUQ – B 1–52
2.9 FAQ – B 1–53
2.10 FDEQ – B 1–54

3 Functional Diagrams

3.1 What Is in This Chapter? 1–55
3.2 Indoor Piping 1–56
3.3 Pipe Connection Diameters 1–58
3.4 Piping Components 1–59

4 Wiring Diagrams

4.1 What Is in This Chapter? 1–61
4.2 FCQ35, 50, 60B 1–62
4.3 FCQ71, 100, 125B 1–64
4.4 FCQ71, 100, 125, 140D 1–66
4.5 FFQ25, 35, 50, 60B 1–68
4.6 FBQ35, 50, 60B 1–70
4.7 FBQ71B 1–72
4.8 FBQ100, 125B 1–74
4.9 FDQ125, 200, 250B 1–76
4.10 FHQ35, 50, 60B 1–78
4.11 FHQ71, 100, 125B 1–80
4.12 FUQ71, 100, 125B 1–82
4.13 FAQ71B 1–84
4.14 FAQ100B 1–86
4.15 FDEQ71B 1–88
4.16 FDEQ100B 1–90
4.17 FDEQ125B 1–92

5 Switch Box Layout

5.1 What Is in This Chapter? 1–95
5.2 FCQ35, 50, 60, 71B 1–96
5.3 FCQ100, 125B 1–97
5.4 FCQ71, 100, 125 140D 1–98
5.5 FFQ25, 35, 50, 60B 1–99
5.6 FBQ35, 50, 60, 71, 100, 125B 1–100
5.7 FDQ125, 200, 250B 1–101
5.8 FHQ35, 50, 60, 71, 100, 125B 1–102
5.9 FUQ71, 100, 125B 1–103
5.10 FAQ71B 1–104
5.11 FAQ100B 1–105
5.12 FDEQ71, 100, 125B 1–106

6 PCB Layout

6.1 What Is in This Chapter? 1–107
6.2 FCQ35, 50, 60B 1–108
6.3 FCQ71, 100, 125B 1–109
6.4 FCQ71, 100, 125, 140D 1–110
6.5 FFQ25, 35, 50, 60B 1–112
6.6 FBQ35, 50, 60, 71B & FDEQ71B 1–113
6.7 FBQ100, 125B & FDEQ100, 125B 1–114
6.8 FDQ125, 200, 250B 1–115
6.9 FHQ35, 50, 60B 1–116
6.10 FHQ71, 100, 125B 1–117
6.11 FUQ71, 100, 125B 1–118
6.12 FAQ71B 1–119
6.13 FAQ100B 1–120

Part 2
Functional Description

1 Functional concept

1.1	What Is in This Chapter?	2–3
1.2	Functions of Thermistors	2–4
1.3	Forced Operating Mode (Emergency Operation)	2–5
1.4	Outdoor Unit Identification Function	2–7
1.5	Simulated Operation Function	2–8
1.6	Restart Standby	2–9
1.7	Automatic Restart	2–10
1.8	Using Conditions for Remote Controller Thermostat	2–11
1.9	Forced Thermostat OFF	2–13
1.10	Freeze Prevention Function	2–14
1.11	PMV Control	2–15
1.12	Thermostat Control	2–16
1.13	Drain Pump Control	2–17
1.14	Condensation Avoidance Control	2–19
1.15	Draft Avoidance Control 1	2–20
1.16	Draft Avoidance Control 2	2–21
1.17	Fan and Flap Operations	2–22
1.18	Indoor Unit Fan Control	2–23

Part 3
Troubleshooting

1 Troubleshooting

1.1	What Is in This Chapter?	3–3
1.2	General Troubleshooting Flowchart	3–4
1.3	Overview of General Problems	3–5
1.4	Procedure of Self-Diagnosis by Remote Controller	3–20
1.5	Fault-diagnosis by Wired Remote Controller	3–21
1.6	Fault-diagnosis by Wireless Remote Controller	3–22
1.7	Overview of Error Codes	3–26
1.8	Troubleshooting by LED Indications on the Indoor Unit	3–27
1.9	Troubleshooting by Remote Controller Display / LED Display	3–28
1.10	Overview of the Indoor Safety Devices	3–30

2 Error Codes

2.1	What Is in This Chapter?		3–31
2.2	Malfunctioning Indoor PCB	(A1)	3–32
2.3	Malfunction of Drain Water Level System	(A3)	3–33
2.4	Malfunctioning Drain System	(AF)	3–35
2.5	Indoor Unit Fan Motor Lock	(A6)	3–36
2.6	Malfunctioning Capacity Setting	(AJ)	3–38
2.7	Thermistor Abnormality	(C4, C5, C9)	3–40
2.8	Malfunctioning Remote Controller Air Thermistor	(CJ)	3–42
2.9	Malfunctioning of Moisture Sensor System	(CC)	3–43

3 Error Codes: System Malfunctions

3.1	What Is in This Chapter?		3–45
3.2	Malfunction of Transmission between Indoor and Outdoor Unit (U4 or UF)		3–46
3.3	Malfunction of Transmission between Indoor Unit and Remote Controller (U5)		3–48
3.4	Malfunction of Transmission between MAIN Remote Controller and SUB Remote Controller	(U8)	3–49
3.5	Malfunctioning Field Setting Switch	(UA)	3–50
3.6	Centralized Address Setting Error	(UC)	3–52

4 Additional Checks for Troubleshooting

4.1 What Is in This Chapter? 3–53
4.2 Indoor Unit: Checking the Fan Motor Hall IC 3–54
4.3 Indoor Unit: Checking the Power Supply Wave Form..... 3–55
4.4 Checking the Thermistors..... 3–56
4.5 Resistance Conversion Table (Ambient, Coil, Fin) 3–57
4.6 Evaluation of Abnormal High Pressure..... 3–58
4.7 Evaluation of Abnormal Low Pressure..... 3–59
4.8 Checks..... 3–60

Part 4
Commissioning and Test Run

1 Pre-Test Run Checks

1.1 What Is in This Chapter? 4–3
1.2 Test Run Checks 4–4
1.3 Setting the Wireless Remote Controller 4–5

2 Field Settings

2.1 What Is in This Chapter? 4–9
2.2 How to Change the Field Settings with the Wired Remote Controller 4–10
2.3 How to Change the Field Settings with the Wireless Remote Controller 4–12
2.4 Overview of the Field Settings on the Indoor Units 4–13
2.5 Overview of the Factory Settings on the Indoor Units 4–14
2.6 Setting the Ceiling Height 4–15
2.7 Setting the Filter Counter 4–16
2.8 MAIN/SUB Setting when Using Two Remote Controllers 4–18
2.9 Setting the Centralized Group No. 4–19
2.10 The Field Setting Levels 4–20

3 Test Run and Operation Data

3.1 General Operation Data 4–24

Part 5
Disassembly and Maintenance

1 Disassembly and Maintenance

1.1 What Is in This Chapter? 5–3
1.2 FCQ35, 50, 60, 71B 5–4
1.3 FCQ100, 125B 5–6
1.4 FFQ25, 35, 50, 60B 5–8
1.5 FBQ35, 50B 5–10
1.6 FBQ60, 71B 5–12
1.7 FBQ100, 125B 5–14
1.8 FDQ125, 200, 250B 5–16
1.9 FDEQ71, 100B 5–18
1.10 FDEQ125B 5–20
1.11 FCQ71, 100, 125, 140D 5–22
1.12 FFQ25, 50, 60B 5–42
1.13 FHQ35, 50, 60, 71, 100, 125B 5–79
1.14 FUQ71, 100, 125B 5–94
1.15 FAQ71B 5–111
1.16 FAQ100B 5–122

1 Introduction

1.1 About This Manual

Target group

This service manual is intended for and should only be used by qualified engineers.

Purpose of this manual

This service manual contains all the information you need to do the necessary repair and maintenance tasks for the R-410A Sky Air Indoor Units.

Five parts

This service manual consists of an introduction, five parts and an index:

Part	See page
Part 1–System Outline	1–1
Part 2–Functional Description	2–1
Part 3–Troubleshooting	3–1
Part 4–Commissioning and Test Run	4–1
Part 5–Disassembly and Maintenance	5–1

Introduction overview

The introduction contains the following topics:

Topic	See page
1.2–Combination Overview	ii

1

1.2 Combination Overview

Introduction

In the tables in this section:

- “2” stands for symmetrical twin combination.
- “3” stands for symmetrical triple combination.
- “4“ stands for symmetrical double twin combination.
- “P” stands for pair combination
- ‘’M’’ stands for multi combination
- ‘’T’’ stands for assymmetrical twin or triple combination

3

Pair split outdoor

The table below contains the possible combinations between indoor units and pair split outdoor units.

4

5

Indoor unit \ Outdoor unit		Non Inverter		Inverter											
		Cooling Only		Cooling Only						Heat Pump					
		RS50BVMB	RS60BVMB	RKS25BVMB	RKS35BVMB	RKS50BVMB(9)	RKS60BVMB(9)	RKS25D(2)VMB	RKS35D(2)VMB	RXS25BVMB	RXS35BVMB	RSX50BVMB	RSX60BVMB	RXS25D(2)VMB	RXS35D(2)VMB
950x950 cassette standard	FCQ35B7V1				P				P		P				P
	FCQ50B7V1	P				P						P			
	FCQ60B7V1		P				P						P		
600X600 cassette	FFQ25B(7)V1B			P				P		P				P	
	FFQ35B(7)V1B				P				P		P				P
	FFQ50B(7)V1B	P				P						P			
	FFQ60B(7)V1B		P				P						P		
duct standard	FBQ35B7V1				P				P		P				P
	FBQ50B7V1	P				P						P			
	FBQ60B7V1		P				P						P		
ceiling suspended	FHQ35BUV1B				P				P		P				P
	FHQ50BUV1B	P				P						P			
	FHQ60BUV1B		P				P						P		

Multi split outdoor

The table below contains the possible combinations between indoor units and multi split outdoor units.

Indoor unit \ Outdoor unit		Inverter															
		Cooling Only						Heat Pump									
		4MKS58BVMB	4MKS75BVMB	4MKS90BVMB	4MKS58DVMB	4MKS75DVMB	4MKS90DVMB	3MXS52BVMB	4MXS68BVMB	4MXS80BVMB	2MXS52DVMB	3MXS52DVMB	4MXS68DVMB	4MXS80DVMB	RMXS112D7V3B	RMXS140D7V3B	RMXS160D7V3B
950x950 cassette standard	FCQ35B7V1	M	M	M	M	M	M	M	M	M	M	M	M	M	M	M	M
	FCQ50B7V1	M	M	M	M	M	M	M	M	M	M	M	M	M	M	M	M
	FCQ60B7V1		M	M		M	M		M	M			M	M	M	M	M
600X600 cassette	FFQ25B(7)V1B	M	M	M	M	M	M	M	M	M	M	M	M	M	M	M	M
	FFQ35B(7)V1B	M	M	M	M	M	M	M	M	M	M	M	M	M	M	M	M
	FFQ50B(7)V1B	M	M	M	M	M	M	M	M	M	M	M	M	M	M	M	M
	FFQ60B(7)V1B		M	M		M	M		M	M			M	M	M	M	M
duct standard	FBQ35B7V1	M	M	M	M	M	M	M	M	M	M	M	M	M	M	M	M
	FBQ50B7V1	M	M	M	M	M	M	M	M	M	M	M	M	M	M	M	M
	FBQ60B7V1		M	M		M	M		M	M			M	M	M	M	M
ceiling suspended	FHQ35BUV1B	M	M	M	M	M	M	M	M	M	M	M	M	M	M	M	M
	FHQ50BUV1B	M	M	M	M	M	M	M	M	M	M	M	M	M	M	M	M
	FHQ60BUV1B		M	M		M	M		M	M			M	M	M	M	M

3

4

5

1

Sky Air outdoor The table below contains the possible combinations between indoor units and Sky Air outdoor units.

Indoor unit		Outdoor unit	Non Inverter									Inverter					
			Cooling Only			Heat Pump						Heat Pump					
			RR71B7V3B RR71B7W1B	RR100B7V3B RR100B7W1B	RR125B7W1B	RQ71B7V3B RQ71B7W1B	RQ100B7V3B RQ100B7W1B	RQ125B7W1B	REQ71B7V3B REQ71B7W1B	REQ100B7V3B REQ100B7W1B	REQ125B7W1B	RZQ71B7(8)V3B	RZQ100B7(8)V3B RZQ100B7W1B	RZQ125B7(8)V3B RZQ125B7W1B	RZQ140B7W1B	RZQ200B7W1B	RZQ250B7W1B
950x950 cassette	standard	FCQ35B7V1	T	T		T	T					2	3	4	4		
		FCQ50B7V1		T	T		T	T					2	3	3	4	
		FCQ60B7V1		T	T		T	T						2		3	4
		FCQ71B7V3B	P	T	T	P	T	T	P			P			2	3	
		FCQ100B7V3B		P			P			P			P			2	
		FCQ125B7V3B			P			P			P			P			2
	high COP	FCQ71DV3B										P					
		FCQ100DV3B											P				
		FCQ125DV3B												P			
		FCQ140DV3B													P		
600X600		FFQ35B(7)V1B	T	T		T						2	3	4	4		
		FFQ50B(7)V1B		T	T		T	T					2	3	3	4	
		FFQ60B(7)V1B		T	T		T	T						2		3	4
duct	standard	FBQ35B7V1	T	T		T						2	3	4	4		
		FBQ50B7V1		T	T		T	T					2	3	3	4	
		FBQ60B7V1		T	T		T	T						2		3	4
		FBQ71B7V3B	P	T	T	P	T	T	P			P			2	3	
		FBQ100B7V3B		P			P			P			P			2	
		FBQ125B7V3B			P			P			P			P			2
	large	FDQ125B7V3B			P			P						P			2
		FDQ200B7V3B														P	
		FDQ250B7V3B															P
	SC30 duct	FDEQ71B7V3B							P								
		FDEQ100B7V3B								P							
		FDEQ125B7V3B									P						

3

4

5

Indoor unit \ Outdoor unit		Non Inverter									Inverter					
		Cooling Only			Heat Pump						Heat Pump					
		RR71B7V3B RR71B7W1B	RR100B7V3B RR100B7W1B	RR125B7W1B	RQ71B7V3B RQ71B7W1B	RQ100B7V3B RQ100B7W1B	RQ125B7W1B	REQ71B7V3B REQ71B7W1B	REQ100B7V3B REQ100B7W1B	REQ125B7W1B	RZQ71B7(8)V3B	RZQ100B7(8)V3B RZQ100B7W1B	RZQ125B7(8)V3B RZQ125B7W1B	RZQ140B7W1B	RZQ200B7W1B	RZQ250B7W1B
ceiling suspended	FHQ35BUV1B	T	T		T	T					2	3	4	4		
	FHQ50BUV1B		T	T		T	T					2	3	3		
	FHQ60BUV1B		T	T		T	T						2			
	FHQ71BUV3B	P	T	T	P	T	T	P			P			2		
	FHQ100BUV3B		P			P			P			P				
	FHQ125BUV3B			P			P			P			P			
ceiling suspended cassette	FUQ71BV3B	P	T	T	P	T	T				P			2		
	FUQ100BV3B		P			P						P				
	FUQ125BV3B			P			P						P			
Wall mounted	FAQ71BV3B	P	T	T	P	T	T				P			2		
	FAQ100BV3B		P			P						P				

1

Combination matrix

	Possible indoor combination (Standard capacity for twin, triple and double twin operation)		
	Twin	**Triple**	**Double Twin**
Outdoor models	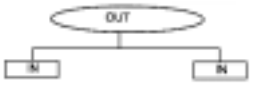	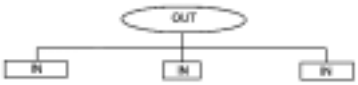	
RZQ71B8V3B	35-35 (KHRQ22M20TA7)		
RZQ100B8V3B RZQ100B7W1B	50-50 (KHRQ22M20TA7)	35-35-35 (KHRQ127H7)	
RZQ125B8V3B RZQ125B7W1B	60-60 (KHRQ22M20TA7)	50-50-50 (KHRQ127H7)	35-35-35-35 (3x KHRQ22M20TA7)
RZQ140B7W1B	71-71 (KHRQ22M20TA7)	50-50-50 (KHRQ127H7)	35-35-35-35 (3x KHRQ22M20TA7)

3

4

Notes:

1 Possible indoor types:

- FCQ35~71
- FFQ35~60
- FHQ35~71
- FBQ35~71
- FUQ71
- FAQ71

5

2 Individual indoor capacities are not given because the combinations are for simultaneous operation (=indoor units installed in same room).

3 When different indoor models are used in combination, designate the remote control that is equipped with the most functions as the main unit. In note 1 are the indoor units mentioned in order of the possible function (most functions are on FCQ, less functions are on FAQ)

4 Between brackets are the required Refnet kits mentioned, that are necessary to install the combination

Combination matrix

	Possible indoor combination (Standard capacity for twin, triple and double twin operation)		
	Twin	**Triple**	**Double Twin**
Outdoor models		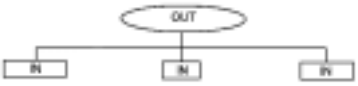	
RZQ200B7W1B	100-100 (KHRQ22M20TA7)	60-60-60 71-71-71 (KHRQ250H7)	50-50-50-50 (3x KHQ22M20TA7)
RZQ250B7W1B	125-125 (KHRQ22M20TA7)	–	60-60-60-60 (3x KHRQ22M20TA7)

Notes:

1 Possible indoor types:

- FCQ50~125
- FFQ50, 60
- FHQ50~125
- FBQ50~125
- FUQ71~125
- FAQ71, 100
- FDQ125

2 Individual indoor capacities are not given because the combinations are for simultaneous operation (=indoor units installed in same room).

3 When different indoor models are used in combination, designate the remote control that is equipped with the most functions as the main unit. In note 1 are the indoor units mentioned in order of the possible function (most functions are on FCQ, less functions are on FAQ)

4 Between brackets are the required Refnet kits mentioned, that are necessary to install the combination

1

Combination matrix

	Possible indoor combination (Standard capacity for twin and triple operation)						
	Twin			Triple			
Outdoor models	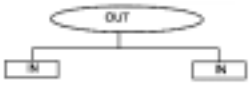			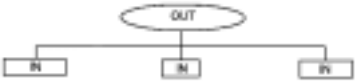			
RQ71B7V3/W1 RR71B7V3/W1	35-35 (KHRQ22M20TA7)	–	–	–	–	–	–
RQ100B7V3/W1 RR100B7V3/W1	50-50 (KHRQ22M20TA7)	50-60 (KHRQ22M20TA7)	35-71 (KHRQ22M20TA7)	35-35-35 (KHRQ127H7)	–	–	–
RQ125B7W1 RR125B7W1	60-60 (KHRQ22M20TA7)	50-71 (KHRQ22M20TA7)	–	50-50-50 (KHRQ127H7)	–	–	–

3

Notes:

1 Possible indoor types:

4

- FCQ35~71
- FFQ35~60
- FUQ71
- FHQ35~71
- FAQ71
- FBQ35~71

5

2 Individual indoor capacities are not given because the combinations are for simultaneous operation (=indoor units installed in same room).

3 When different indoor models are used in combination, designate the remote control that is equipped with the most functions as the main unit. In note 1 are the indoor units mentioned in order of the possible function (most functions are on FCQ, less functions are on FBQ)

4 Between brackets are the required Refnet kits mentioned, that are necessary to install the combination

5 For unit specification of the outdoor units and the indoor units refer to the unit specifications mentioned for pair systems.

6 Nominal cooling capacities are based on the following conditions: indoor air temperature: 27°CDB, 19°CWB, outdoor temperature 35°CDB. Nominal heating capacities are based on the following conditions: indoor air temperature: 20°CDB, outdoor temperature 7°CDB, 6°CWB.

Part 1
System Outline

What is in this part? This part contains the following chapters:

Chapter	See page
1–General Outline	1–3
2–Specifications	1–45
3–Functional Diagrams	1–55
4–Wiring Diagrams	1–61
5–Switch Box Layout	1–95
6–PCB Layout	1–107

1 General Outline

1.1 What Is in This Chapter?

Introduction

This chapter contains the following information on the indoor units:

- Outlook and dimensions
- Components

General outline

This chapter contains the following general outlines:

General outline	See page
1.2–FCQ35, 50, 60, 71B	1–4
1.3–FCQ100, 125B	1–6
1.4–FCQ71D	1–8
1.5–FCQ100, 125, 140D	1–10
1.6–FFQ25, 35, 50, 60B	1–12
1.7–FBQ35, 50B	1–14
1.8–FBQ60, 71B	1–16
1.9–FBQ100, 125B	1–18
1.10–FDQ125B	1–20
1.11–FDQ200, 250B	1–22
1.12–FHQ35, 50B	1–24
1.13–FHQ60, 71B	1–26
1.14–FHQ100B	1–28
1.15–FHQ125B	1–30
1.16–FUQ71B	1–32
1.17–FUQ100, 125B	1–34
1.18–FAQ71B	1–36
1.19–FAQ100B	1–38
1.20–FDEQ71, 100B	1–40
1.21–FDEQ125B	1–42

1

1.2 FCQ35, 50, 60, 71B

Outlook and dimensions

The illustration below shows the outlook and the dimensions of the unit (mm).

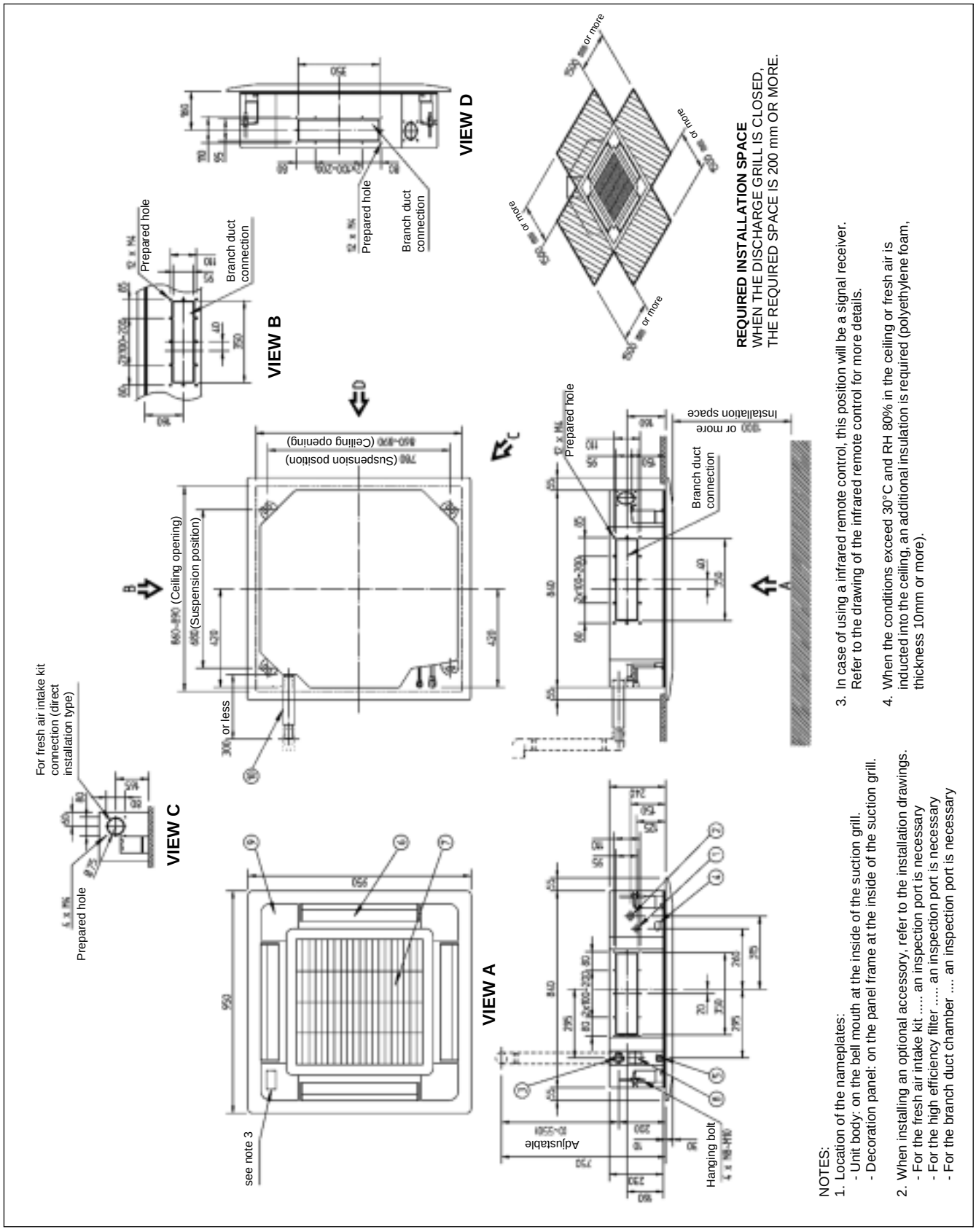

Components

The table below contains the different components of the unit.

No.	Component
1	Liquid pipe connection
2	Gas pipe connection
3	Drain pipe connection
4	Power supply connection
5	Transmission wiring connection
6	Air outlet
7	Air suction grille
8	Water supply intake for drain
9	Corner decoration cover
10	Drain hose

1

1.3 FCQ100, 125B

Outlook and dimensions

The illustration below shows the outlook and the dimensions of the unit (mm).

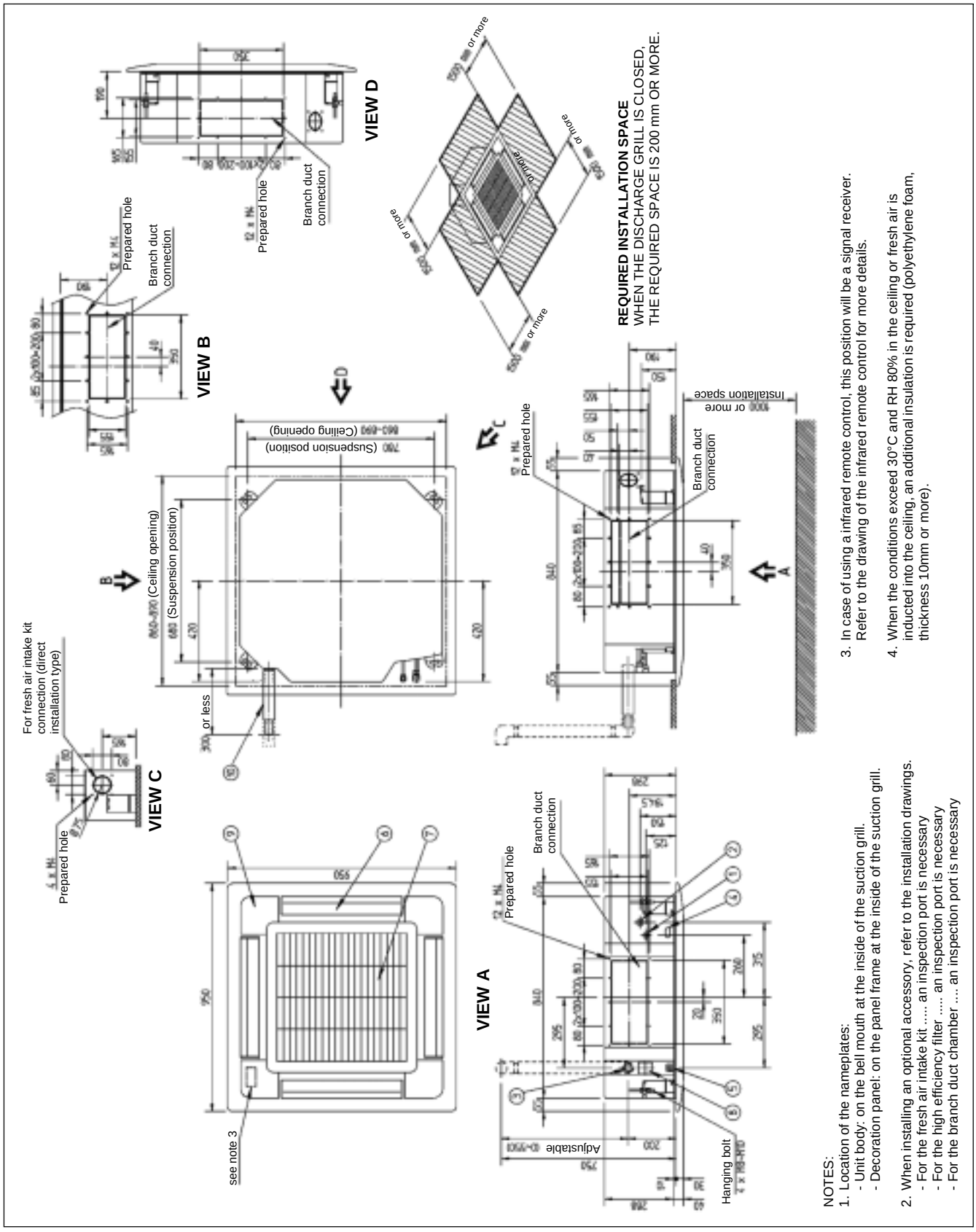

Components

The table below contains the different components of the unit.

No.	Component
1	Liquid pipe connection
2	Gas pipe connection
3	Drain pipe connection
4	Power supply connection
5	Transmission wiring connection
6	Air discharge outlet
7	Air suction grille
8	Water supply intake for drain
9	Corner decoration cover
10	Drain hose

1

1.4 FCQ71D

Outlook and dimensions

The illustration below shows the outlook and the dimensions of the unit (mm).

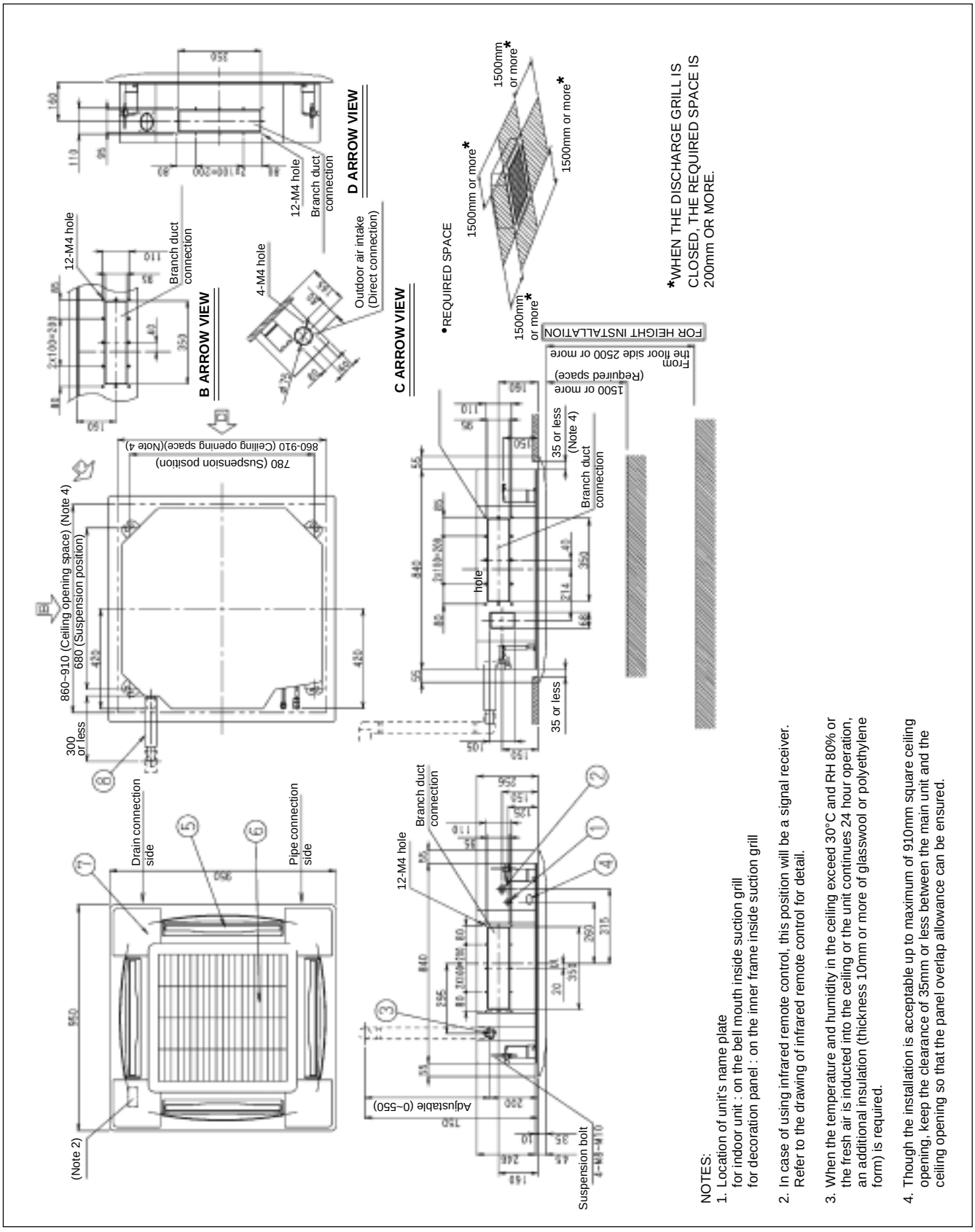

Components

The table below contains the different components of the unit.

No.	Component
1	Liquid pipe connection
2	Gas pipe connection
3	Drain pipe connection
4	Power supply / Wiring / remote control connection
5	Air outlet
6	Suction grille
7	Corner decoration cover
8	Drain hose (accessory)

1

1.5 FCQ100, 125, 140D

Outlook and dimensions

The illustration below shows the outlook and the dimensions of the unit (mm).

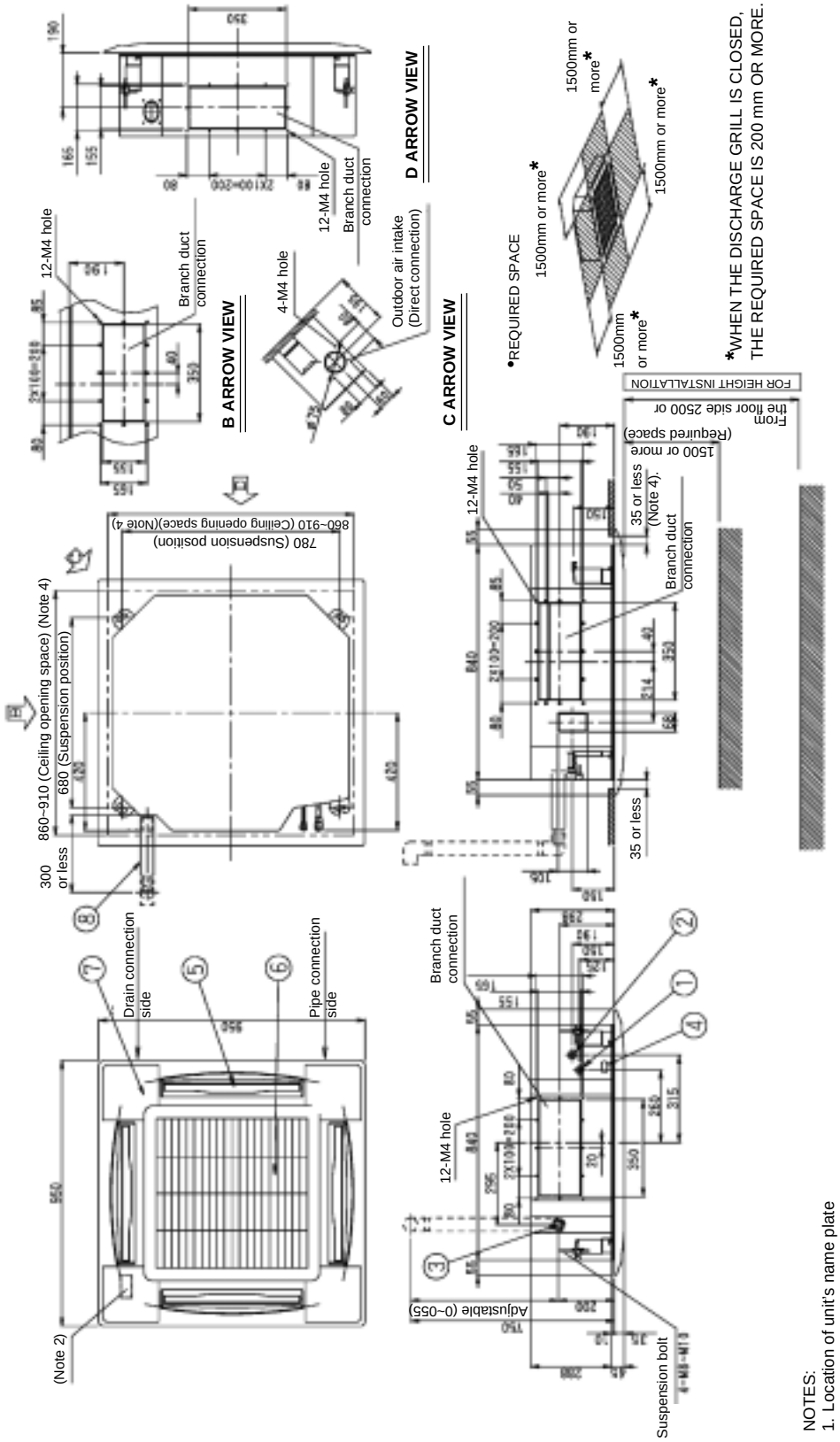

NOTES:
1. Location of unit's name plate
   for indoor unit : on the bell mouth inside suction grill
   for decoration panel : on the inner frame inside suction grill
2. In case of using infrared remote control, this position will be a signal receiver. Refer to the drawing of infrared remote control for detail.
3. When the temperature and humidity in the ceiling exceed 30°C and RH 80% or the fresh air is inducted into the ceiling or the unit continues 24 hour operation, an additional insulation (thickness 10mm or more of glasswool or polyethylene form) is required.
4. Though the installation is acceptable up to maximum of 910mm square ceiling opening, keep the clearance of 35mm or less between the main unit and the ceiling opening so that the panel overlap allowance can be ensured.

Components

The table below contains the different components of the unit.

No.	Component
1	Liquid pipe connection
2	Gas pipe connection
3	Drain pipe connection
4	Power supply / Wiring / remote control connection
5	Power supply connection
6	Air-Outlet
7	Suction grille
8	Corner decoration cover
9	Drain hose (accessory)

1

1.6 FFQ25, 35, 50, 60B

Outlook and dimensions

The illustration below shows the outlook and the dimensions of the unit (mm).

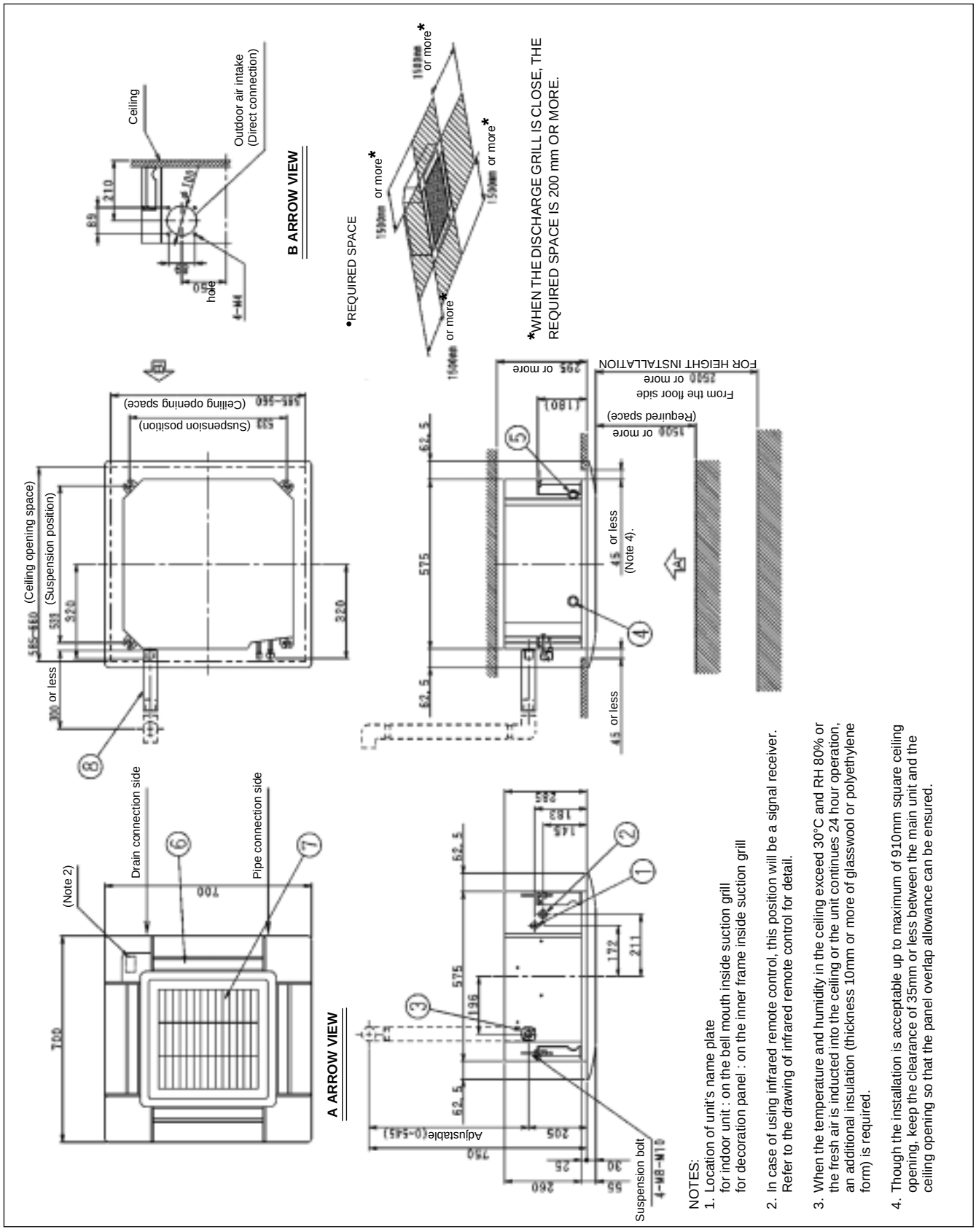

Components

The table below contains the different components of the unit.

No.	Component
1	Liquid pipe connection
2	Gas pipe connection
3	Drain pipe connection
4	Power supply connection
5	Remote control code and control wiring connection
6	Air discharge outlet
7	Suction grille
8	Drain hose

1

1.7 FBQ35, 50B

Outlook and dimensions

The illustration below shows the outlook and the dimensions of the unit (mm).

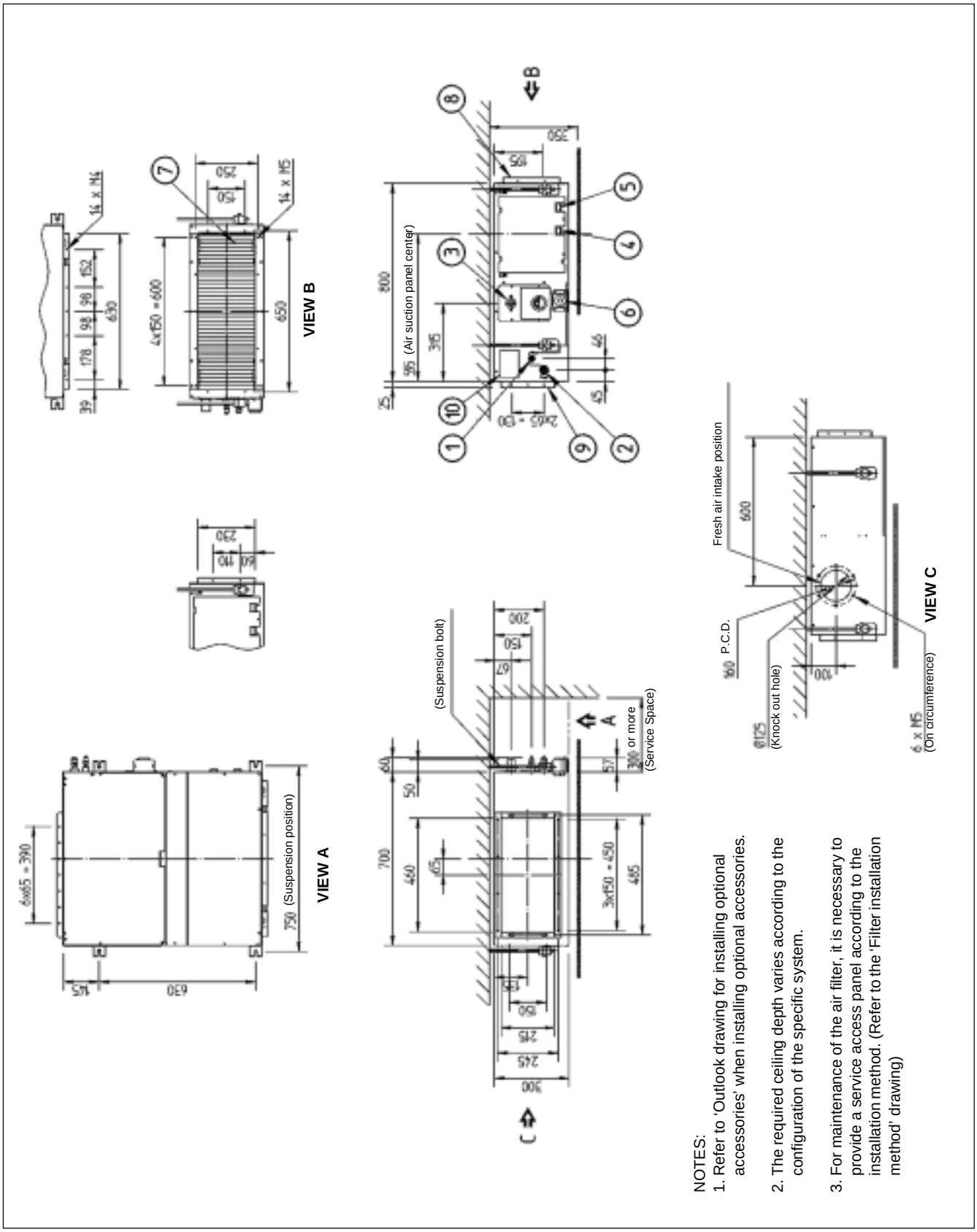

Components

The table below contains the different components of the unit.

No.	Component
1	Liquid pipe connection
2	Gas pipe connection
3	Drain pipe connection
4	remote control wiring connection
5	Power supply connection
6	Drain hole
7	Air filter
8	Air suction side
9	Air discharge side
10	Nameplate

1

1.8 FBQ60, 71B

Outlook and dimensions

The illustration below shows the outlook and the dimensions of the unit (mm).

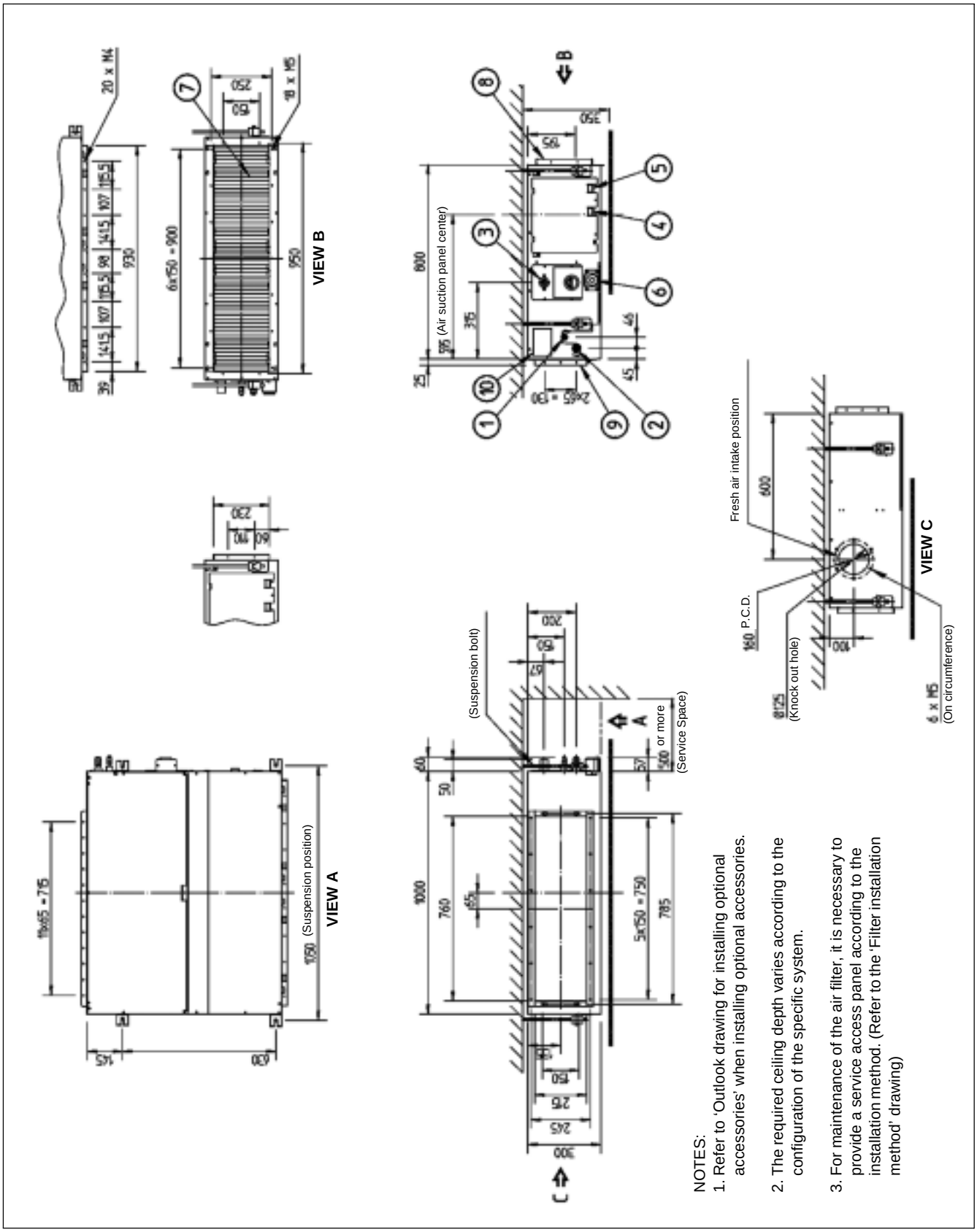

Components

The table below contains the different components of the unit.

No.	Component
1	Liquid pipe connection
2	Gas pipe connection
3	Drain pipe connection
4	remote control wiring connection
5	Power supply connection
6	Drain hole
7	Air filter
8	Air suction side
9	Air discharge side
10	Nameplate

1

1.9 FBQ100, 125B

Outlook and dimensions

The illustration below shows the outlook and the dimensions of the unit (mm).

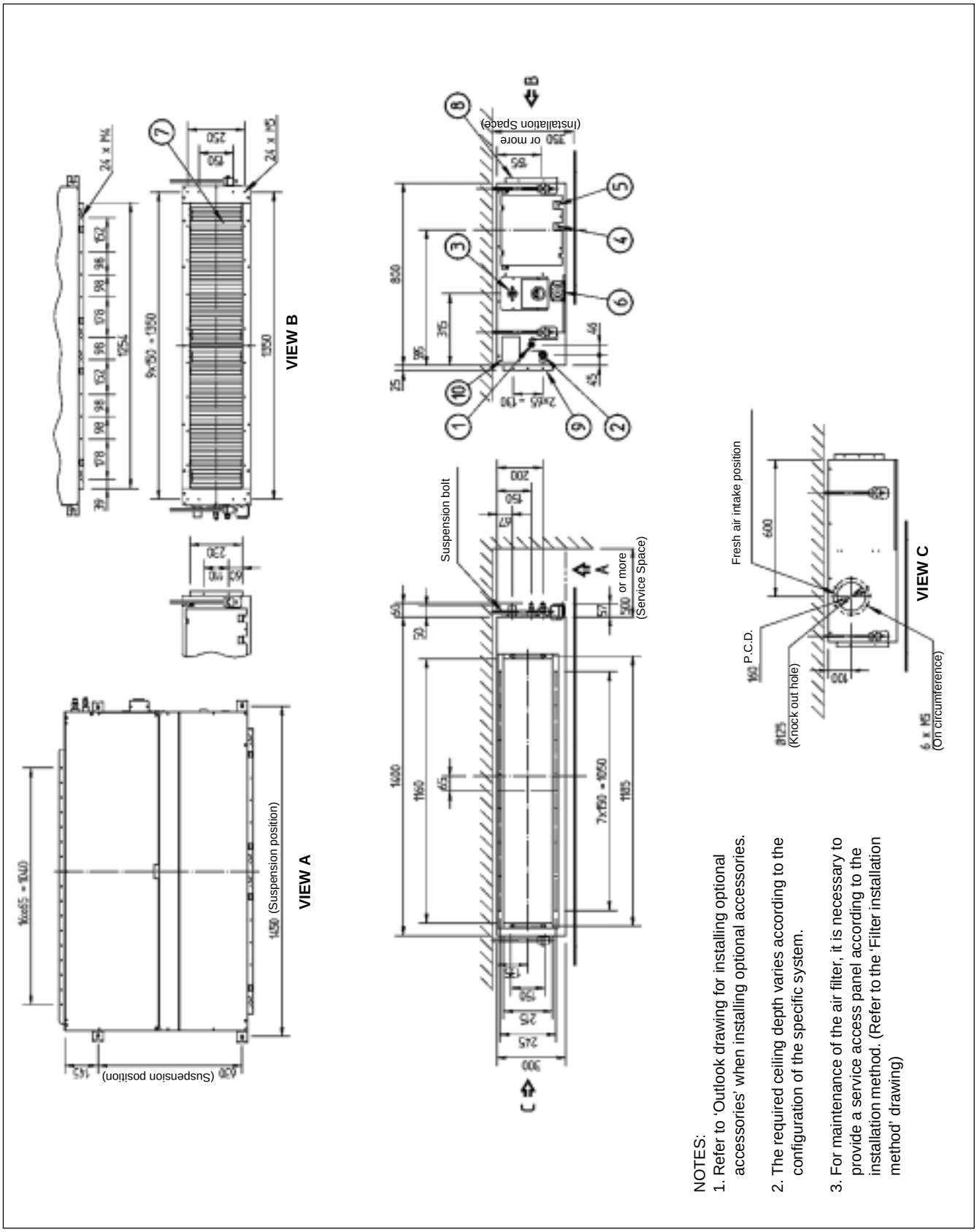

Components

The table below contains the different components of the unit.

No.	Component
1	Liquid pipe connection
2	Gas pipe connection
3	Drain pipe connection
4	remote control wiring connection
5	Power supply connection
6	Drain hole
7	Air filter
8	Air suction side
9	Air discharge side
10	Nameplate

1

1.10 FDQ125B

Outlook and dimensions

The illustration below shows the outlook and the dimensions of the unit (mm).

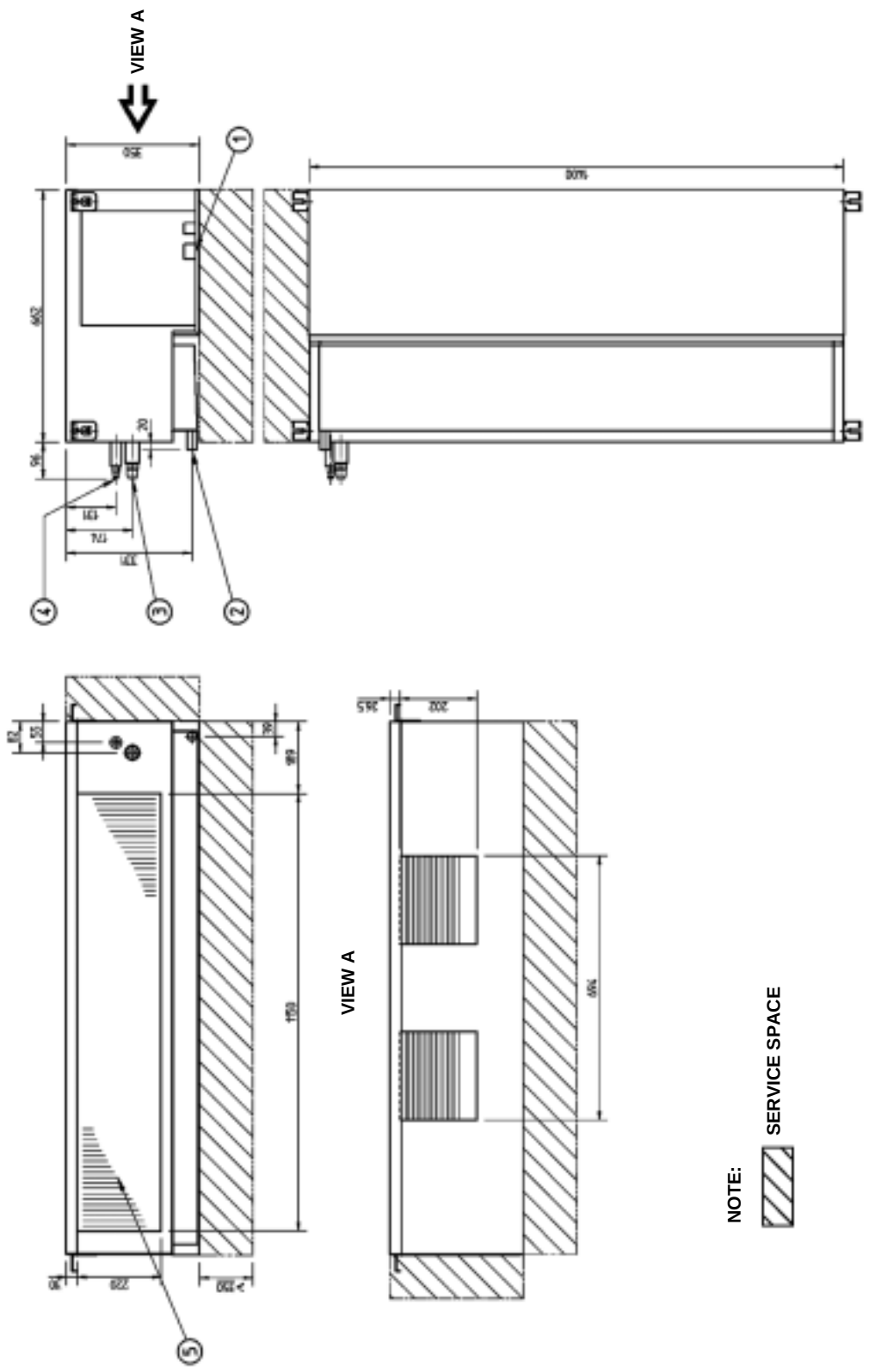

Components

The table below contains the different components of the unit.

No.	Component
1	Power supply instake
2	Drain connection
3	Gas pipe connection single union
4	Liquid pipe connection single union
5	Filter

1

1.11 FDQ200, 250B

Outlook and dimensions

The illustration below shows the outlook and the dimensions of the unit (mm).

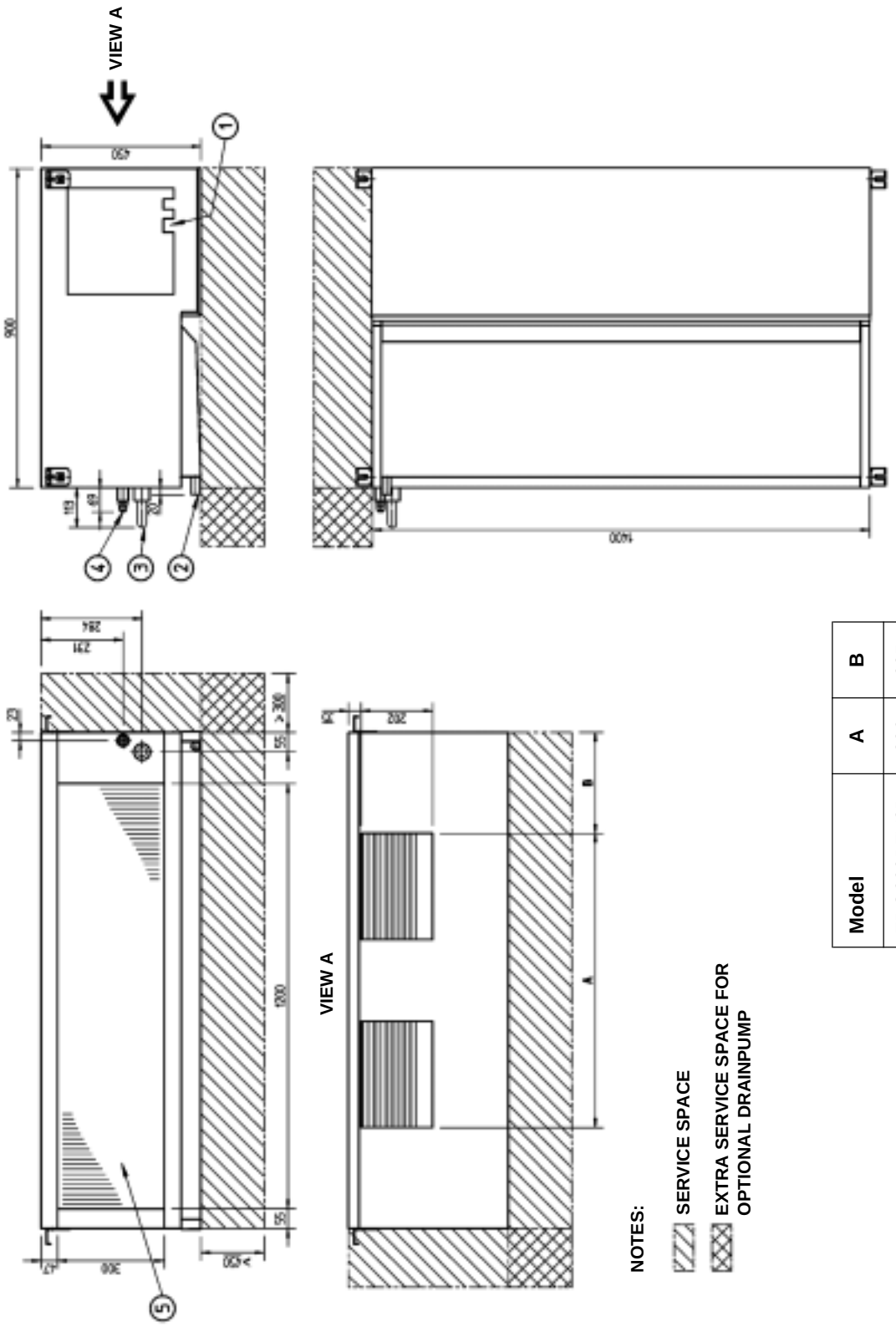

Model	A	B
FDQ200B7V3B	830	285
FDQ250B7V3B	890	255

Components

The table below contains the different components of the unit.

No.	Component
1	Power supply instake
2	Drain connection
3	Gas pipe connection
4	Liquid pipe connection
5	Filter

1

1.12 FHQ35, 50B

Outlook and dimensions

The illustration below shows the outlook and the dimensions of the unit (mm).

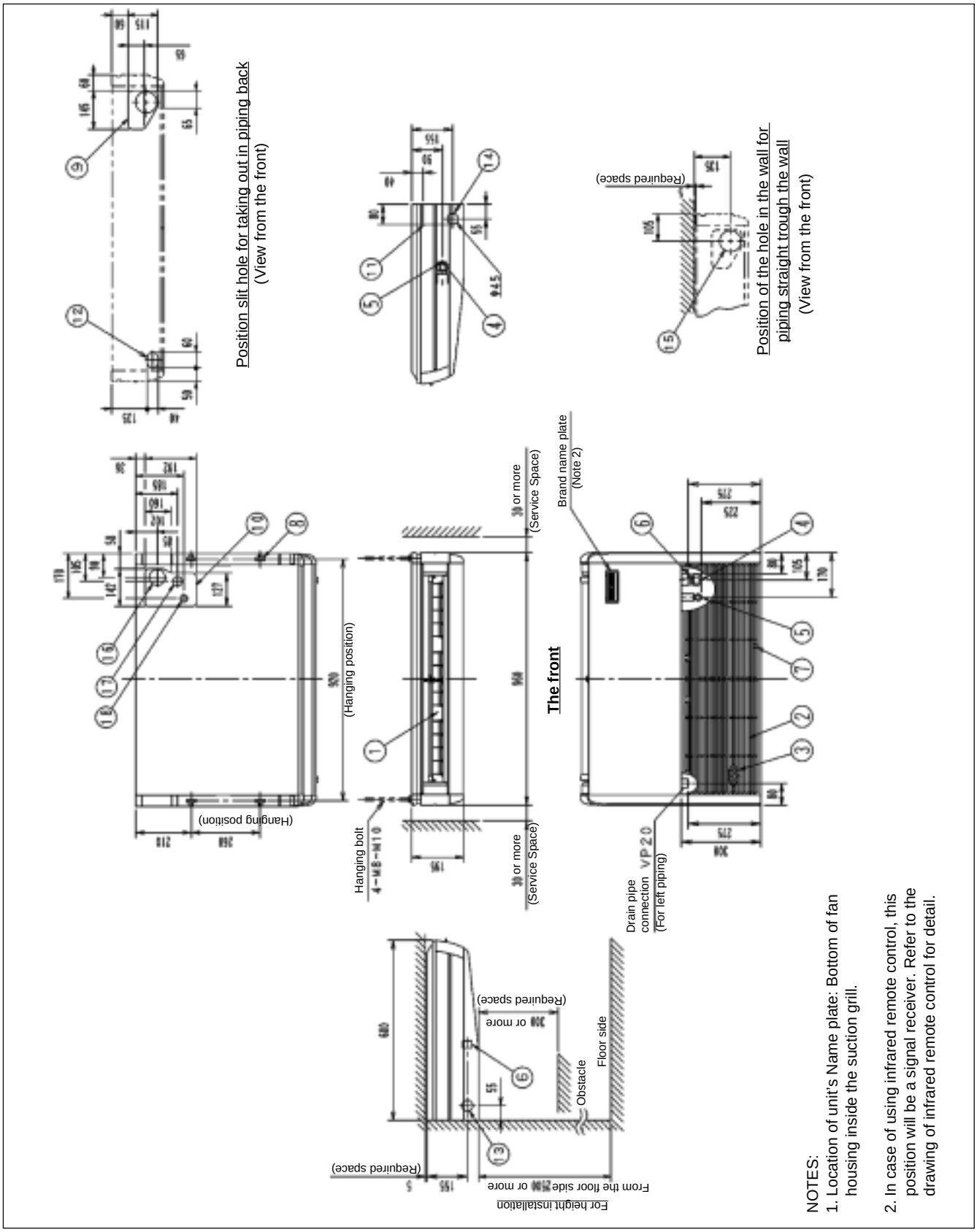

Components

The table below contains the different components of the unit.

No.	Component
1	Air outlet
2	Air suction grille
3	Air filter
4	Gas pipe connection
5	Liquid pipe connection
6	Drain pipe connection
7	Earth terminal (Inside the electric components box)
8	Suspension bracket
9	Backward piping and wiring connection opening lid
10	Upward piping and wiring connection opening lid
11	Right side pipe connection
12	Back side drain pipe connection, left
13	Left side drain pipe connection
14	Right side drain pipe connection
15	Position of the hole in the wall for piping straight trough the wall
16	Upward drain pipe connection
17	Upward gas pipe connection
18	Upward liquid pipe connection

1

1.13 FHQ60, 71B

Outlook and dimensions

The illustration below shows the outlook and the dimensions of the unit (mm).

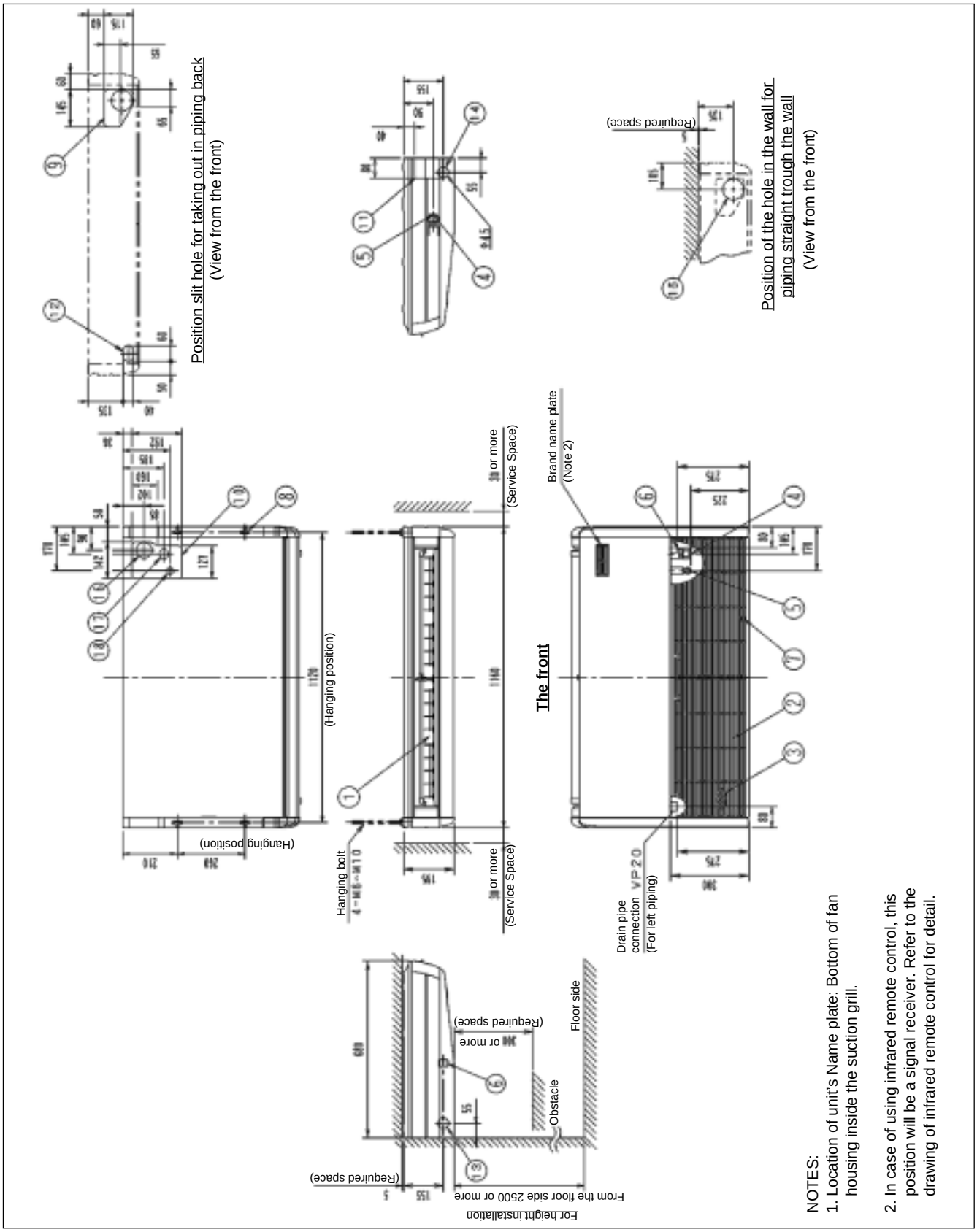

Components

The table below contains the different components of the unit.

No.	Component
1	Air outlet
2	Air suction grille
3	Air filter
4	Gas pipe connection
5	Liquid pipe connection
6	Drain pipe connection
7	Earth terminal (Inside the electric components box)
8	Suspension bracket
9	Backward piping and wiring connection opening lid
10	Upward piping and wiring connection opening lid
11	Right side pipe connection
12	Back side drain pipe connection, left
13	Left side drain pipe connection
14	Right side drain pipe connection
15	Position of the hole in the wall for piping straight trough the wall
16	Upward drain pipe connection
17	Upward gas pipe connection
18	Upward liquid pipe connection

1

1.14 FHQ100B

Outlook and dimensions

The illustration below shows the outlook and the dimensions of the unit (mm).

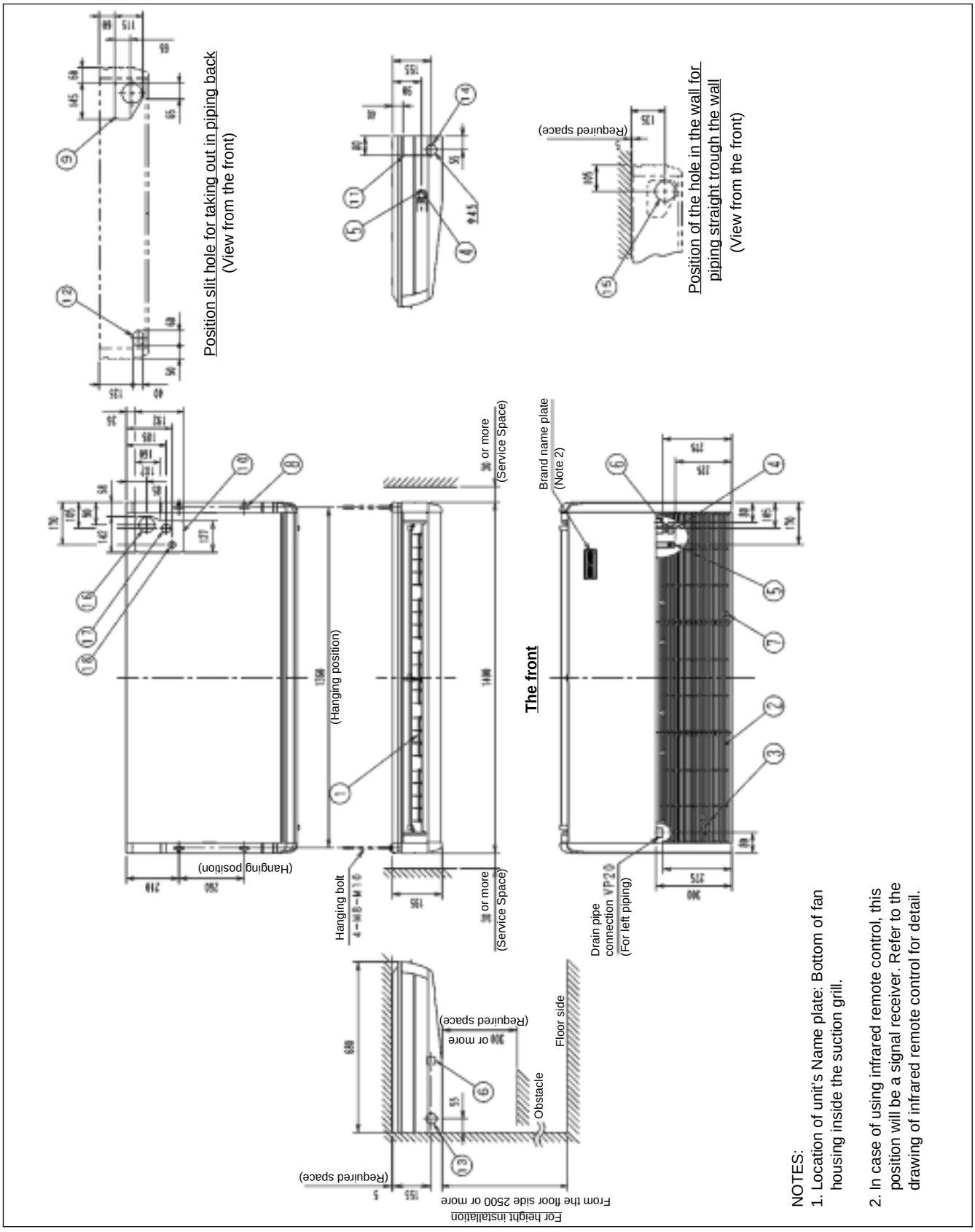

Components

The table below contains the different components of the unit.

No.	Component
1	Air outlet
2	Air suction grille
3	Air filter
4	Gas pipe connection
5	Liquid pipe connection
6	Drain pipe connection
7	Earth terminal (Inside the electric components box)
8	Suspension bracket
9	Backward piping and wiring connection opening lid
10	Upward piping and wiring connection opening lid
11	Right side pipe connection
12	Back side drain pipe connection, left
13	Left side drain pipe connection
14	Right side drain pipe connection
15	Position of the hole in the wall for piping straight trough the wall
16	Upward drain pipe connection
17	Upward gas pipe connection
18	Upward liquid pipe connection

1

1.15 FHQ125B

Outlook and dimensions

The illustration below shows the outlook and the dimensions of the unit (mm).

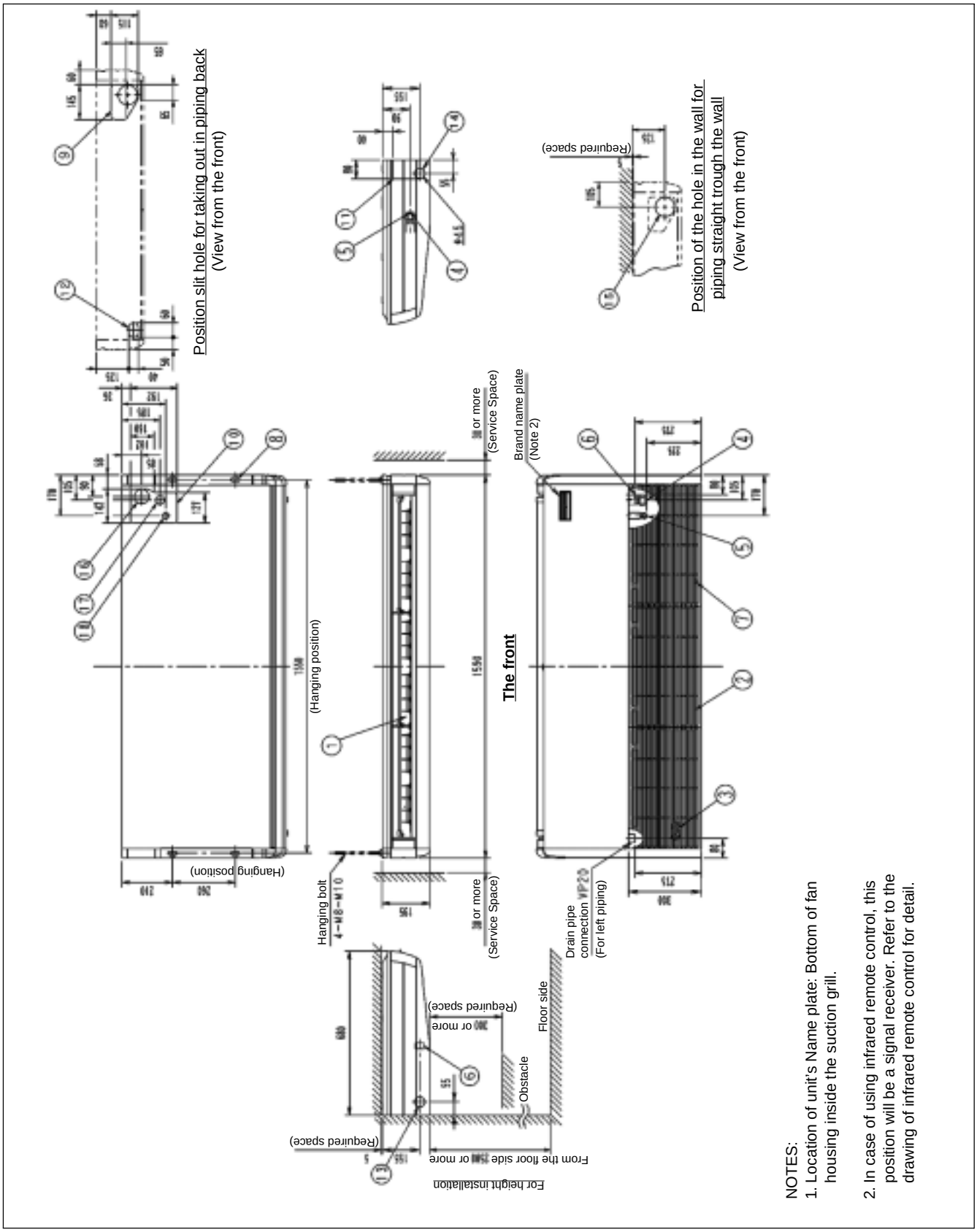

Components

The table below contains the different components of the unit.

No.	Component
1	Air outlet
2	Air suction grille
3	Air filter
4	Gas pipe connection
5	Liquid pipe connection
6	Drain pipe connection
7	Earth terminal (Inside the electric components box)
8	Suspension bracket
9	Backward piping and wiring connection opening lid
10	Upward piping and wiring connection opening lid
11	Right side pipe connection
12	Back side drain pipe connection, left
13	Left side drain pipe connection
14	Right side drain pipe connection
15	Position of the hole in the wall for piping straight trough the wall
16	Upward drain pipe connection
17	Upward gas pipe connection
18	Upward liquid pipe connection

1

1.16 FUQ71B

Outlook and dimensions

The illustration below shows the outlook and the dimensions of the unit (mm).

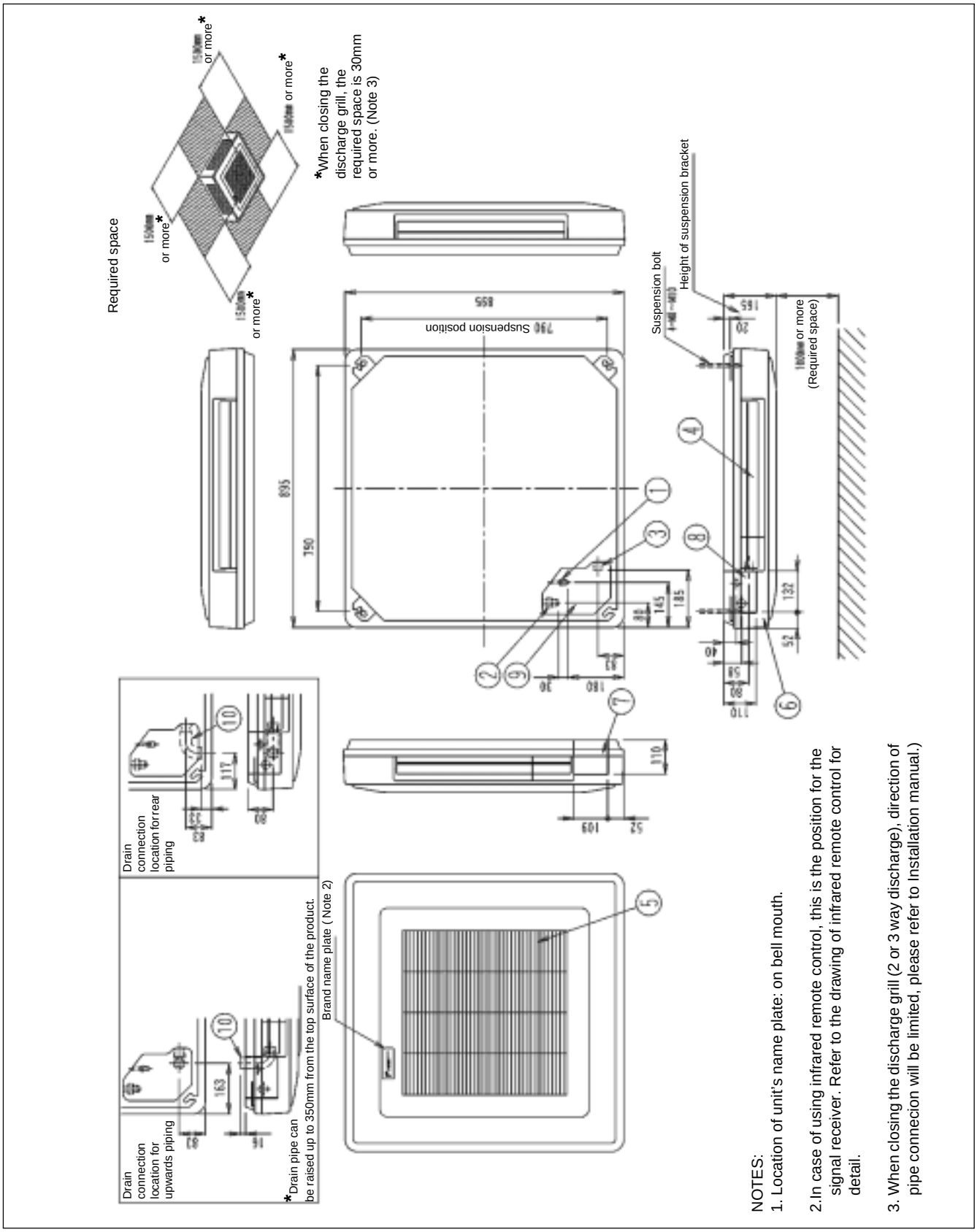

Components

The table below contains the different components of the unit.

No.	Component
1	Liquid pipe connection
2	Gas pipe connection
3	Drain pipe connection
4	Air outlet
5	Air suction grille
6	Corner decoration cover
7	Right pipe and wiring connection
8	Rear pipe and wiring connection
9	Cover for upwards pipe and wiring connection
10	Accessory drain elbow

1

1.17 FUQ100, 125B

Outlook and dimensions

The illustration below shows the outlook and the dimensions of the unit (mm).

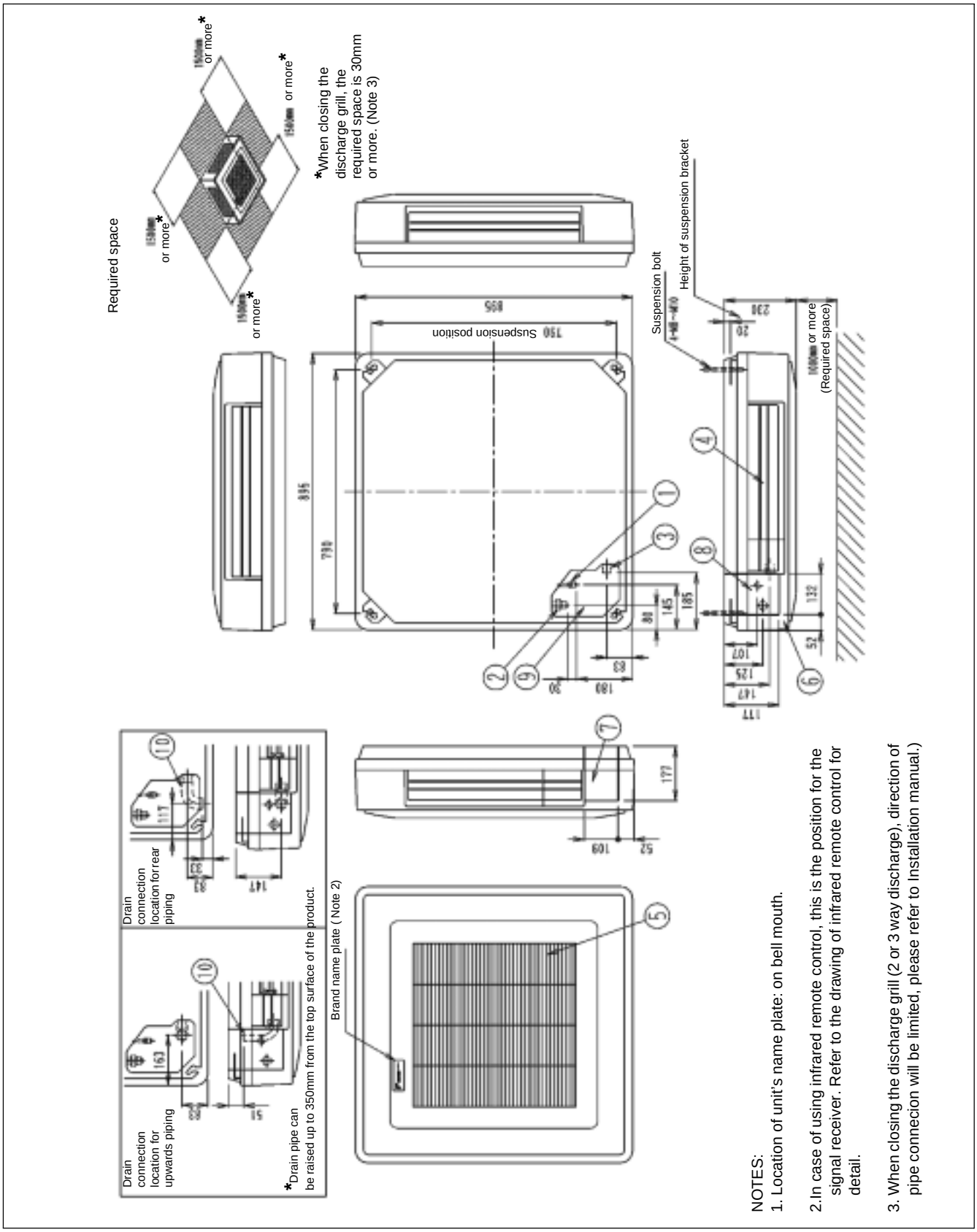

Components

The table below contains the different components of the unit.

No.	Component
1	Liquid pipe connection
2	Gas pipe connection
3	Drain pipe connection
4	Air outlet
5	Air suction grille
6	Corner decoration cover
7	Right pipe and wiring connection
8	Rear pipe and wiring connection
9	Cover for upwards pipe and wiring connection
10	Accessory drain elbow

1

1.18 FAQ71B

Outlook and dimensions

The illustration below shows the outlook and the dimensions of the unit (mm).

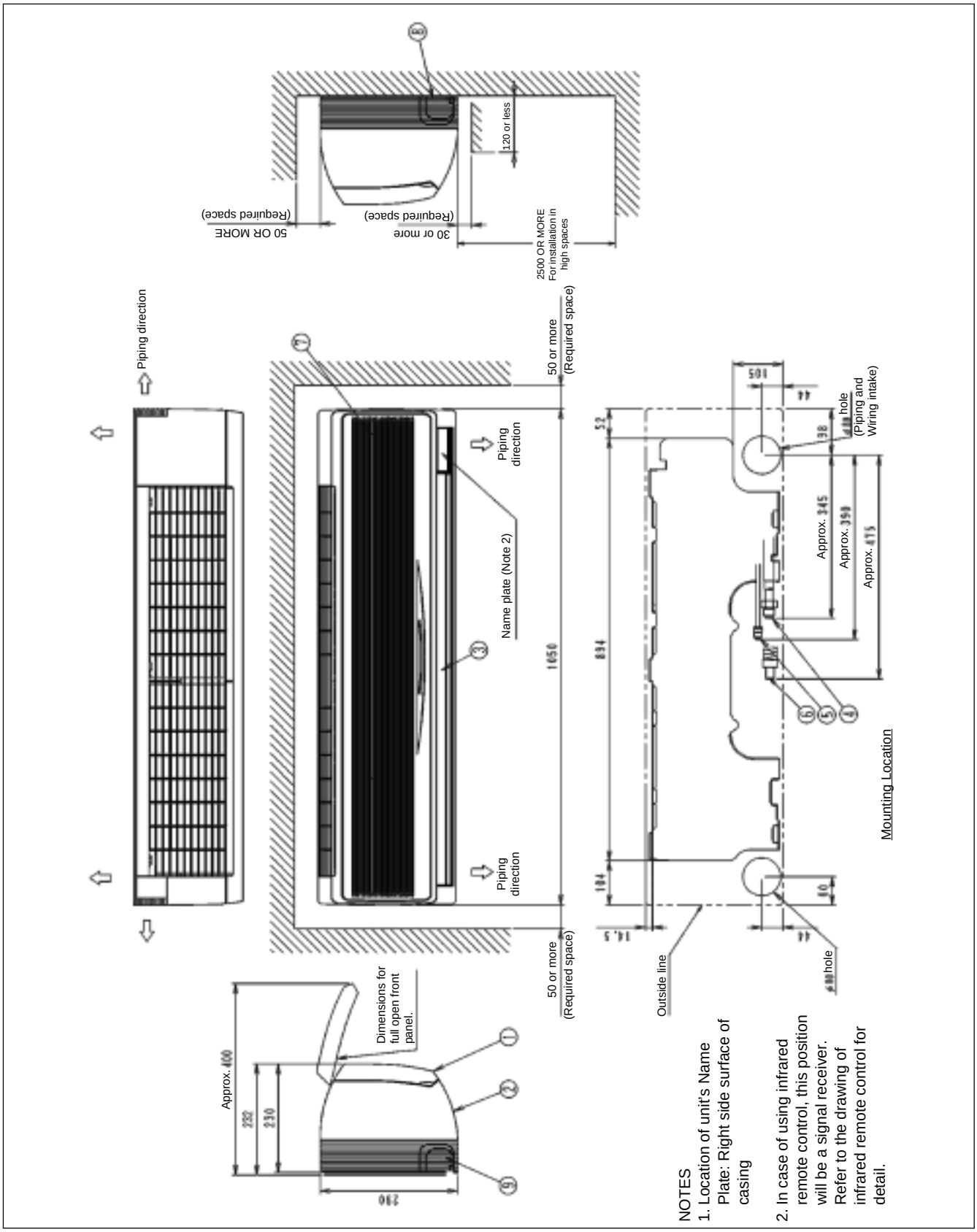

Components

The table below contains the different components of the unit.

No.	Component
1	Front panel
2	Front grille
3	Air outlet
4	Gas pipe
5	Liquid pipe
6	Drain hose
7	Grounding terminal
8	Right side pipe connection hole
9	Left side pipe connection hole

1

1.19 FAQ100B

Outlook and dimensions

The illustration below shows the outlook and the dimensions of the unit (mm).

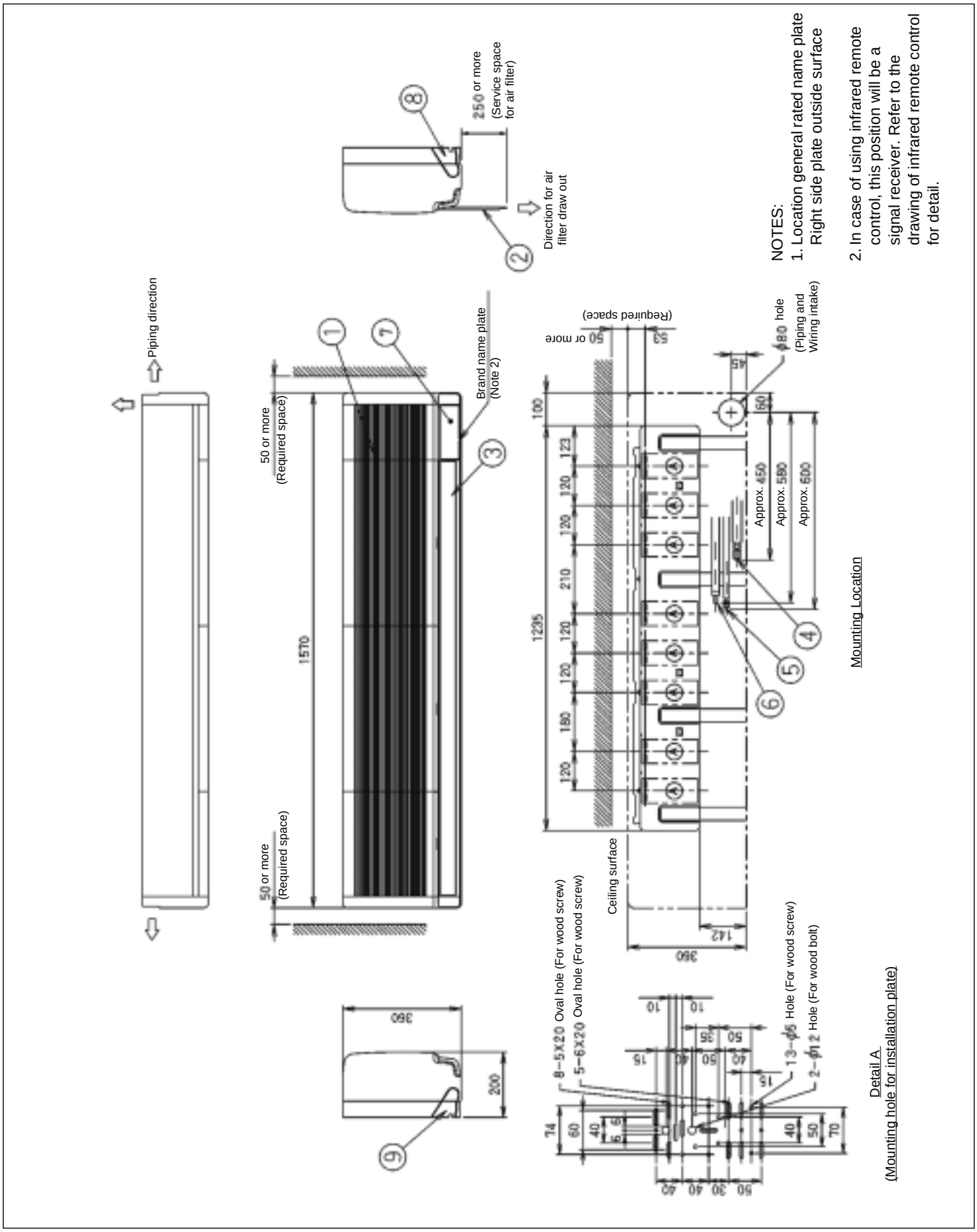

Components

The table below contains the different components of the unit.

No.	Component
1	Front grille
2	Air filter
3	Discharge outlet
4	Gas piping connection
5	Gas piping connection
6	Drain piping connection
7	Earth terminal
8	Slit hole for right side piping connection
9	Slit hole for left side piping connection

1

1.20 FDEQ71, 100B

Outlook and dimensions

The illustration below shows the outlook and the dimensions of the unit (mm).

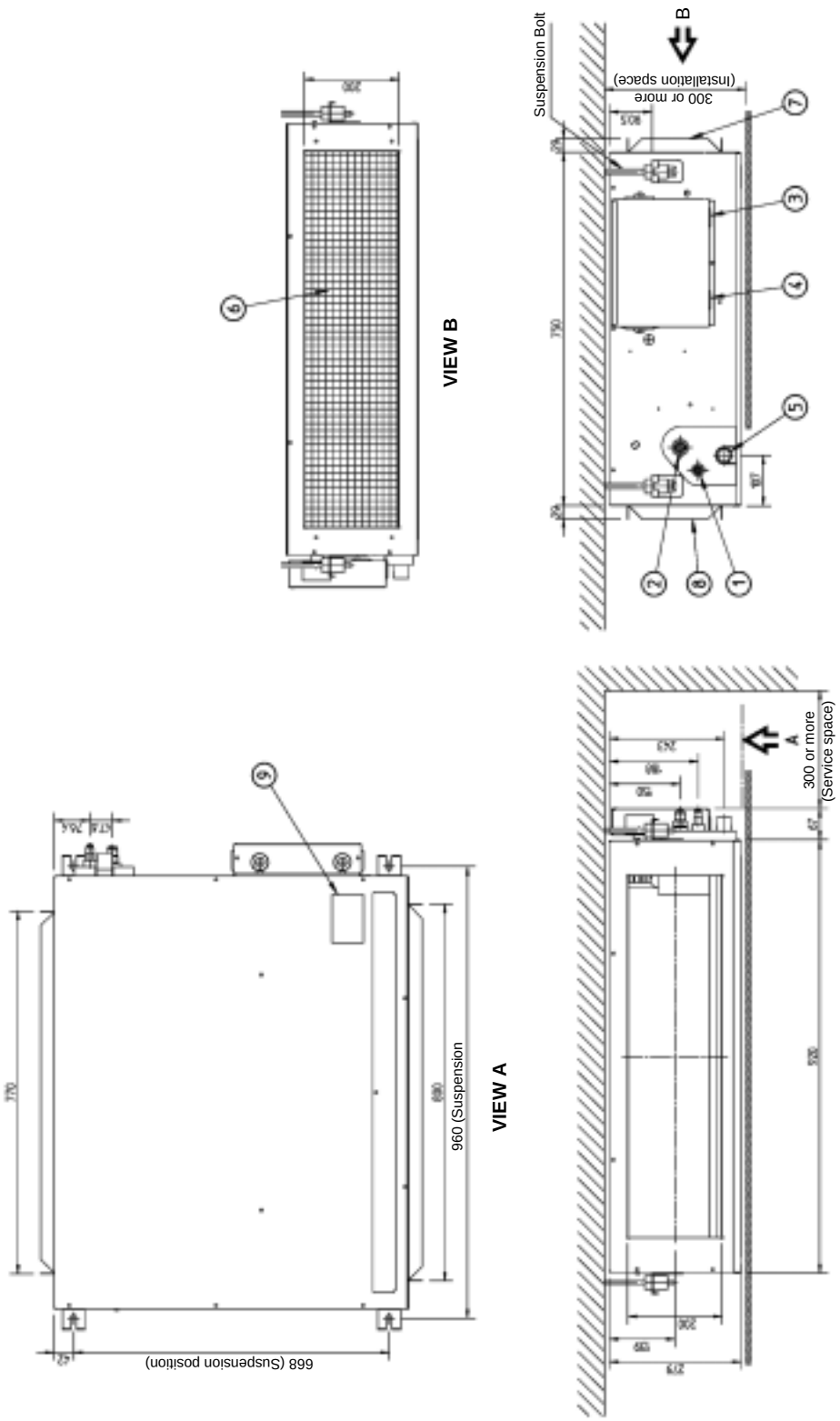

NOTES:

1. Refer to 'Outlook drawing for installing optional accessories' when installing optional accessories.
2. For maintenance of the air filter, it is necessary to provide a service access panel according to the installation method. (Refer to the 'Filter installation method' drawing).

Components

The table below contains the different components of the unit.

No.	Component
1	Liquid pipe connection
2	Gas pipe connection
3	remote control wiring connection
4	Power supply connection
5	Drain pipe connection
6	Air filter
7	Air suction side
8	Air discharge side
9	Nameplate

1

1.21 FDEQ125B

Outlook and dimensions

The illustration below shows the outlook and the dimensions of the unit (mm).

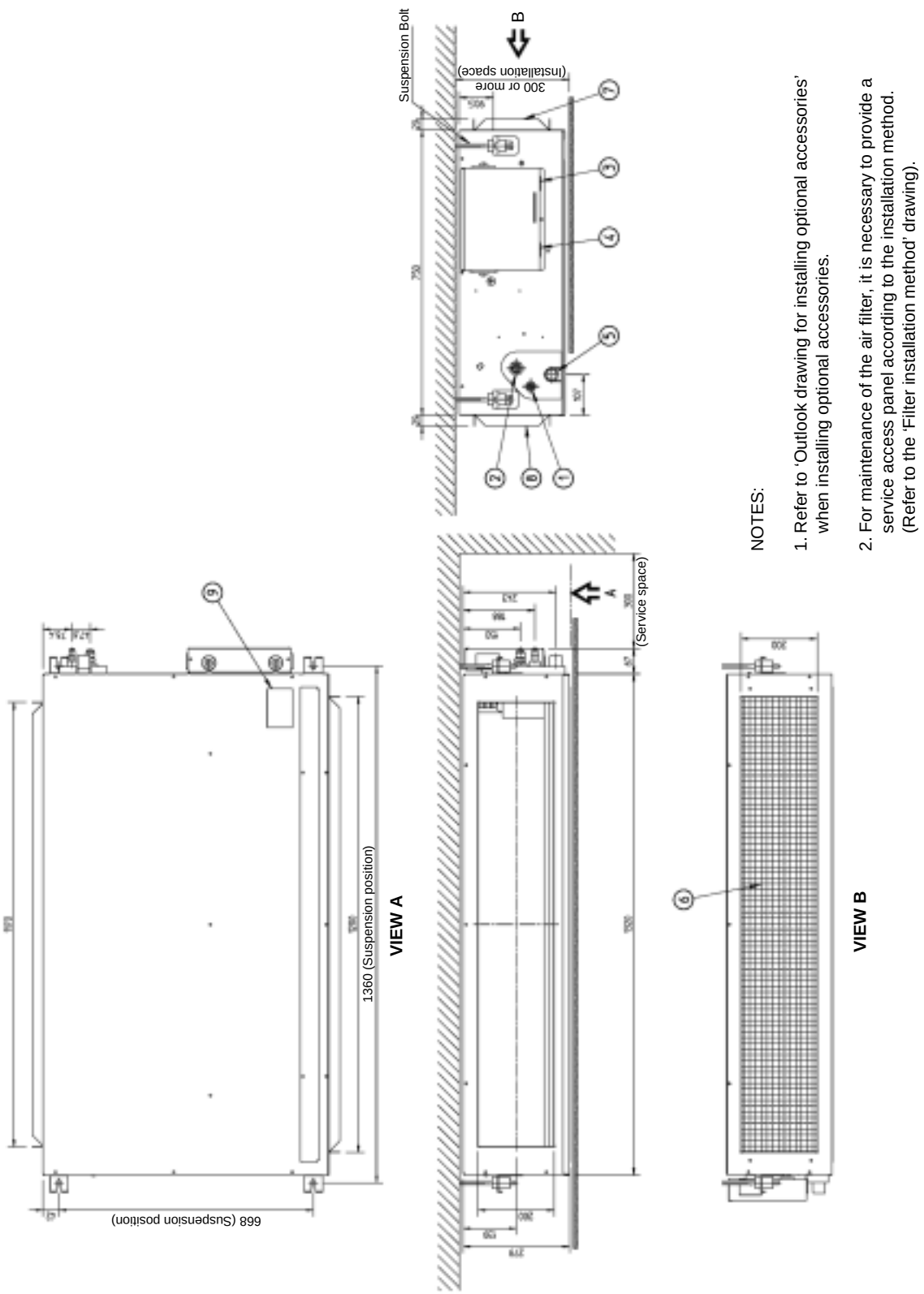

NOTES:

1. Refer to 'Outlook drawing for installing optional accessories' when installing optional accessories.
2. For maintenance of the air filter, it is necessary to provide a service access panel according to the installation method. (Refer to the 'Filter installation method' drawing).

Components

The table below contains the different components of the unit.

No.	Component
1	Liquid pipe connection
2	Gas pipe connection
3	remote control wiring connection
4	Power supply connection
5	Drain pipe connection
6	Air filter
7	Air suction side
8	Air discharge side
9	Nameplate

2 Specifications

2.1 What Is in This Chapter?

Introduction

This chapter contains the following information:

- Technical specifications
- Electrical specifications

Indoor units

This chapter contains the following specifications:

Specifications	See page
2.2–FCQ – B	1–46
2.3–FCQ – D	1–47
2.4–FFQ – B	1–48
2.5–FBQ – B	1–49
2.6–FDQ – B	1–50
2.7–FHQ – B	1–51
2.8–FUQ – B	1–52
2.9–FAQ – B	1–53
2.10–FDEQ – B	1–54

1

2.2 FCQ – B

Technical specifications

The table below contains the technical specifications.

Specification		FCQ35B7V1	FCQ50B7V1	FCQ60B7V1	FCQ71B7V3B	FCQ100B7V3B	FCQ125B7V3B
Heat exchanger	Rows x stages x fin pitch	2 x 8 x 1.5 mm				2 x 12 x 1.5 mm	
	Face area	0.331 m²				0.497 m²	
	Tube type	HIXA diam. 7			HiXSS diam. 7		
	Fin type	Rhombus					
Fan	Air flow rate cooling (high)	14 m³/min	15 m³/min	18 m³/min	18 m³/min	28 m³/min	31 m³/min
	Air flow rate cooling (low)	10 m³/min	11 m³/min	14 m³/min	14 m³/min	21 m³/min	24 m³/min
	Air flow rate heating (high)	14 m³/min	15 m³/min	18 m³/min	18 m³/min	28 m³/min	31 m³/min
	Air flow rate heating (low)	10 m³/min	11 m³/min	14 m³/min	14 m³/min	21 m³/min	24 m³/min
	Qty x model (rotor)	1 x QTS46B14M				1 x QTS46A17M	
	Qty x model (motor)	1 x 19NFB6079				1 x 19NFB6078	
	Fan speed	2 steps (direct drive)					
	Fan type	Turbo fan					
Refrigerant	Type	R410A					
Safety and functional devices		Inline fuse (250V 5A)					
		Fan motor thermal protector		OFF: 130 $^{+/-5}$ °C ON: 83 $^{+/-20}$ °C		OFF: 140 $^{+/-5}$ °C ON: 45 $^{+/-15}$ °C	
		Drain pump thermal fuse					
Air filter		Resin net (with mold resistant) - in decoration panel					
Temperature control		Computerized control			Microprocessor thermostat for cooling and heating		
Weight	Unit	23 kg				27.0 kg	

Electrical specifications

The table below contains the electrical specifications.

Specification		FCQ35B7V1	FCQ50B7V1	FCQ60B7V1	FCQ71B7V3B	FCQ100B7V3B	FCQ125B7V3B
Unit	Phase	1~					
	Voltage	230V					
	Frequency	50 Hz					
	Power consumption	140 W		161 W	_		
	Nominal running current						
Fan motor	FLA (Full Load Amps)	0.6 A				1.0 A	
	No. of motors x output	1 x 45 W				1 x 90 W	

2.3 FCQ – D

Technical specifications

The table below contains the technical specifications.

Specification		FCQ71DV3B	FCQ100DV3B	FCQ125DV3B	FCQ140DV3B
Heat exchanger	Rows x stages x fin pitch	2 x 10 x 1.2 mm	2 x 12 x 1.2 mm		
	Face area	0.454 m²	0.544 m²		
	Tube type	Hi-XSS			
	Fin type	Multi louver fin			
Fan	Air flow rate cooling (high)	19 m³/min	30 m³/min		
	Air flow rate cooling (low)	14 m³/min	21 m³/min	24 m³/min	25 m³/min
	Air flow rate heating (high)				
	Air flow rate heating (low)				
	Qty x model (rotor)	1 x QTS46F15M	1 x QTS46E17M		
	Qty x model (motor)	1 x EHDS50B30DK (inverter)	1 x EHDS10B120DK (inverter)		
	Fan speed	2			
	Fan type	Turbo fan			
Refrigerant	Type	R410A			
Safety and functional devices		–			
Air filter		Resin net (with mold resistant) - in decoration panel			
Temperature control		Microcomputer control			
Weight	Unit	24 kg	28 kg		

Electrical specifications

The table below contains the electrical specifications.

Specification		FCQ71DV3B	FCQ100DV3B	FCQ125DV3B	FCQ140DV3B
Unit	Phase	1~			
	Voltage	230V			
	Frequency	50 Hz			
	Nominal running current	–			
Fan motor	FLA (Full Load Amps)	0.30 A	0.70 A		
	No. of motors x output	1 x 30 W	1 x 120 W		

1

2.4 FFQ – B

Technical specifications

The table below contains the technical specifications.

Specification		FFQ25B7V1B	FFQ35B7V1B	FFQ50B7V1B	FFQ60B7V1B
Heat exchanger	Rows x stages x fin pitch	2x10x1.5 mm			
	Face area	0.269 m²			
	Tube type	HiXSS diam. 7			
	Fin type	Multi louver fin			
Fan	Air flow rate cooling (high)	9.0 m³/min	10.0 m³/min	12.0 m³/min	15.0 m³/min
	Air flow rate cooling (low)	6.5 m³/min	6.5 m³/min	8.0 m³/min	10.0 m³/min
	Air flow rate heating (high)	9.0 m³/min	10.0 m³/min	–	15.0 m³/min
	Air flow rate heating (low)	6.5 m³/min	6.5 m³/min	–	10.0 m³/min
	Qty x model (rotor)	1 x QTS32C15M			
	Qty x model (motor)	1 x D16P52A23			
	Fan speed	2 steps			
	Fan type	Turbo fan			
Refrigerant	Type	R410A			
Safety and functional devices		Inline fuse (250V 5A)			
		Fan motor thermal protector		OFF: 130 $^{+/-5}$ °C ON: 83 $^{+/-20}$ °C	
Air filter		Removable/washable/mildew proof/long life (in decoration panel)			
Temperature control		Microcomputer control			
Weight	Unit	17.5 kg			

Electrical specifications

The table below contains the electrical specifications.

Specification		FFQ25B7V1B	FFQ35B7V1B	FFQ50B7V1B	FFQ60B7V1B
Unit	Phase	1~			
	Voltage	230V			
	Frequency	50 Hz			
	Power consumption	73 W	84 W	97 W	120 W
	Nominal running current	0.37 A	0.40 A	0.49 A	0.61 A
Fan motor	FLA (Full Load Amps)	0.60 A		0.70 A	
	No. of motors x output	1 x 55 W			

2.5 FBQ – B

Technical specifications

The table below contains the technical specifications.

Specification		FBQ35B7V1	FBQ50B7V1	FBQ60B7V1	FBQ71B7V3B	FBQ100B7V3B	FBQ125B7V3B
Heat exchanger	Rows x stages x fin pitch	3 x 14 x 1.75 mm					
	Face area	0.132 m²		0.221 m²		0.338 m²	
	Tube type	HI-XA diam. 7			Hi-XSS diam. 7		
	Fin type	Rhombus					
Fan	Air flow rate cooling (high)	11.5 m³/min	14.0 m³/min	19.0 m³/min	19.0 m³/min	27.0 m³/min	35.0 m³/min
	Air flow rate cooling (low)	9.0 m³/min	10.0 m³/min	14.0 m³/min	14.0 m³/min	20.0 m³/min	24.0 m³/min
	Air flow rate heating (high)	11.5 m³/min	14.0 m³/min	19.0 m³/min	19.0 m³/min	27.0 m³/min	35.0 m³/min
	Air flow rate heating (low)	9.0 m³/min	10.0 m³/min	14.0 m³/min	14.0 m³/min	20.0 m³/min	24.0 m³/min
	Qty x model (rotor)	1 x QD18G3BM		2 x QD18G2BM		3 x QD18G2BM	
	Qty x model (motor)	1 x CA-0513D	1 x CA-0514D	1 x CA-0515SEK		1 x A37P135G20	
	Fan speed	2 steps (direct drive)			3 steps (direct drive)		
	Fan type	Sirocco					
Refrigerant	Type	R410A					
Safety and functional devices		Inline fuse (250V 5A)			_		
		Fan motor thermal fuse 152 $^{+/-2}$ °C					
Air filter		Resin net (with mold resistant)					
Temperature control		Computerized control			Microprocessor thermostat for cooling and heating		
Weight	Unit	30 kg	31 kg	41 kg	41 kg	51 kg	52 kg

Electrical specifications

The table below contains the electrical specifications.

Specification		FBQ35B7V1	FBQ50B7V1	FBQ60B7V1	FBQ71B7V3B	FBQ100B7V3B	FBQ125B7V3B
Unit	Phase	1~					
	Voltage	230 V					
	Frequency	50Hz					
	Power consumption	_					
	Nominal running current	_					
Fan motor	FLA (Full Load Amps)	0.5 A	0.7 A	0.9 A		1.0 A	
	No. of motors x output	1 x 65 W	1 x 85 W	1 x 125 W	1 x 125 W	1 x 135 W	1 x 225 W

1

2.6 FDQ – B

Technical specifications

The table below contains the technical specifications.

Specification		FDQ125B7V3B	FDQ200B7V3B	FDQ250B7V3B
Heat exchanger	Rows x stages x fin pitch	3 x 14 x 1.75 mm	3 x 24 x 2.00 mm	
	Face area	0.338 m²	0.634 m²	
	Tube type	Hi-XSS diam. 7	Hi-XSS (8)	
	Fin type	Rhombus	Non-symmetric fin	
Fan	Air flow rate cooling	43.0 m³/min	69 m³/min	89 m³/min
	Air flow rate heating	43.0 m³/min	69 m³/min	89 m³/min
	Qty x model (rotor + motor)	1 x DPA216-178NB	1 x DPC241-241NB	
	Fan speed	1 step (direct drive)		
	Fan type	Sirocco		
Refrigerant	Type	R410A		
Safety and functional devices		Fan motor thermal fuse: 160 °C		
Air filter		Resin net (with mold resistant)		
Temperature control		Microprocessor thermostat for cooling and heating		
Weight	Unit	59.0 kg	93 Kg	

Electrical specifications

The table below contains the electrical specifications.

Specification		FDQ125B7V3B	FDQ200B7V3B	FDQ250B7V3B
Unit	Phase	1~	1~	1~
	Voltage	230 V	230 V	230 V
	Frequency	50Hz	50Hz	50Hz
	Power consumption	–	–	–
	Nominal running current	–	–	–
Fan motor	FLA (Full Load Amps)	4.2 A	6.8 A	7.6 A
	No. of motors x output	1 x 500 W	1 x 650 W	1 x 1000 W

2.7 FHQ – B

1

Technical specifications

The table below contains the technical specifications.

Specification		FHQ35BUV1B	FHQ50BUV1B	FHQ60BUV1B	FHQ71BUV1B	FHQ100BUV1B	FHQ125BUV1B
Heat exchanger	Rows x stages x fin pitch	2 x 12 x 1.75 mm	3 x 12 x 1.75 mm	2 x 12 x 1.75 mm	3 x 12 x 1.75 mm		
	Face area	0.182 m²		0.233 m²		0.293 m²	0.341 m²
	Tube type	N-Hix					
	Fin type	Multi louver					
Fan	Air flow rate cooling (high)	13.0 m³/min		17.0 m³/min	17.0 m³/min	24.0 m³/min	30.0 m³/min
	Air flow rate cooling (low)	10.0 m³/min		13.0 m³/min	14.0 m³/min	20.0 m³/min	25.0 m³/min
	Air flow rate heating (high)	13.0 m³/min		16.0 m³/min	17.0 m³/min	24.0 m³/min	30.0 m³/min
	Air flow rate heating (low)	10.0 m³/min		13.0 m³/min	14.0 m³/min	20.0 m³/min	25.0 m³/min
	Qty x model (rotor)	2 x QD12K1AH 1 x QD12K1BH		3 x QD12K1AH 1 x QD12K1BH		3 x QD12K2AH 1 x QD12K2BH	
	Qty x model (motor)	D09P62A20				D10P130H23	
	Fan speed	2 steps					
	Fan type	Sirocco					
Refrigerant	Type	R410A					
Safety and functional devices		Fuse (250V 5A)			–		
		Fan motor thermal protector			OFF: 130 $^{+/-5}$ °C ON: 83 $^{+/-20}$ °C		
Air filter		Removable/washable					
Temperature control		Microcomputer control					
Weight	Unit	24 kg	25 kg	27 kg		32 kg	35 kg

Electrical specifications

The table below contains the electrical specifications.

Specification		FHQ35BUV1B	FHQ50BUV1B	FHQ60BUV1B	FHQ71BUV1B	FHQ100BUV1B	FHQ125BUV1B
Unit	Phase	1~					
	Voltage	230 V					
	Frequency	50Hz					
	Power consumption	111 W		115 W	117 W	135 W	144 W
	Nominal running current	0.45 A	0.52 A		–		
Fan motor	FLA (Full load amps)	0.6 A				0.7 A	
	No. of motors x output	1 x 62 W				1 x 130 W	

1

2.8 FUQ – B

Technical specifications

The table below contains the technical specifications.

Specification		FUQ71BUV1B	FUQ100BUV1B	FUQ125BUV1B
Heat exchanger	Rows x stages x fin pitch	3 x 6 x 1.5 mm	3 x 8 x 1.5 mm	
	Face area	0.265 m²	0.353 m²	
	Tube type	N-Hix		
	Fin type	Multi louver		
Fan	Air flow rate cooling (high)	19.0 m³/min	29.0 m³/min	32.0 m³/min
	Air flow rate cooling (low)	14.0 m³/min	21.0 m³/min	23.0 m³/min
	Air flow rate heating (high)	19.0 m³/min	29.0 m³/min	32.0 m³/min
	Air flow rate heating (low)	14.0 m³/min	21.0 m³/min	23.0 m³/min
	Qty x model (rotor)	1 x QTS48A10M	1 x QTS50B15M	
	Qty x model (motor)	1 x D16P45R23	1 x D17P90J23	
	Fan speed	2 steps		
	Fan type	Turbo fan		
Refrigerant	Type	R410A		
Safety and functional devices		Fan motor thermal protector: ON: 130 $^{+/-5}$ °C OFF: 83 $^{+/-20}$ °C		
Air filter		Resin net (with mold resistant)		
Temperature control		Microcomputer control		
Weight	Unit	25 kg	31 kg	

Electrical specifications

The table below contains the electrical specifications.

Specification		FUQ71BUV1B	FUQ100BUV1B	FUQ125BUV1B
Unit	Phase	1~		
	Voltage	220-240 V		
	Frequency	50 Hz		
	Power consumption	180 W	289 W	
	Nominal running current	–		
Fan motor	FLA (Full load amps)	0.6 A	1.0 A	
	No. of motors x output	1 x 45 W	1 x 90 W	

2.9 FAQ – B

Technical specifications

The table below contains the technical specifications.

Specification		FAQ71BUV1B	FAQ100BUV1B
Heat exchanger	Rows x stages x fin pitch	2 x 16 x 1.4 mm	2 x 12 x 1.4 mm
	Face area	0.289 m²	0.332 m²
	Tube type	Hi-XA	N-Hix
	Fin type	Multi louver	
Fan	Air flow rate cooling (high)	19.0 m³/min	23.0 m³/min
	Air flow rate cooling (low)	15.0 m³/min	19.0 m³/min
	Air flow rate heating (high)	19.0 m³/min	23.0 m³/min
	Air flow rate heating (low)	15.0 m³/min	19.0 m³/min
	Qty x model (rotor)	1 x QCL9886M	1 x QCL1163MA + 1 x QCL1163MB
	Qty x model (motor)	1 x (ARW30R8P43DA)	1 x D09P49A23
	Fan speed	2 steps	
	Fan type	Cross flow fan	
Refrigerant	Type	R410A	
Safety and functional devices		Fan motor thermal protector:	OFF: 130 $^{+/- 5}$ °C ON: 83 $^{+/- 20}$ °C
Air filter		Resin net (mildew proof)	
Temperature control		Microcomputer control	
Weight	Unit	13 kg	26 kg

Electrical specifications

The table below contains the electrical specifications.

Specification		FAQ71BUV1B	FAQ100BUV1B
Unit	Phase	1~	
	Voltage	220-240 V	
	Frequency	50 Hz	
	Power consumption	68 W	101 W
	Nominal running current	–	
Fan motor	FLA (Full load amps)	0.4 A	
	No. of motors x output	1 x 43 W	1 x 49 W

1

2.10 FDEQ – B

Technical specifications

The table below contains the technical specifications.

Specification		FDEQ71B7V3B	FDEQ100B7V3B	FDEQ125B7V3B
Heat exchanger	Rows x stages x fin pitch	3 x 14 x 1.75 mm		
	Face area	0.226 m²		0.344 m²
	Tube type	Hi-XSS diam. 7		
	Fin type	Rhombus		
Fan	Air flow rate cooling (high)	16.0 m³/min	24.0 m³/min	30.0 m³/min
	Air flow rate cooling (low)	12.0 m³/min	17.0 m³/min	20.0 m³/min
	Air flow rate heating (high)	19.0 m³/min	28.0 m³/min	35.0 m³/min
	Air flow rate heating (low)	14.0 m³/min	20.0 m³/min	24.0 m³/min
	Qty x model (rotor)	2 x QD18G3BM		2 x QD18G2AM 1 x QD18G2BM
	Qty x model (motor)	MLA6027	MLA6028	A37P225E23
	Fan speed	2 steps, direct drive		
	Fan type	Sirocco		
Refrigerant	Type	R410A		
Safety and functional devices		Fan motor thermal fuse: 152 $^{+/-2}$ °C		
Air filter		Resin net (with mold resistant)		
Temperature control		Computerized control		
Weight	Unit	38.1 kg		48.6 kg

Electrical specifications

The table below contains the electrical specifications.

Specification		FDEQ71B7V3B	FDEQ100B7V3B	FDEQ125B7V3B
Unit	Phase	1~		
	Voltage	230 V		
	Frequency	50 Hz		
	Power consumption	150 W	195 W	415 W
	Nominal running current	–		
Fan motor	FLA (Full load amps)	–		
	No. of motors x output	1 x 130 W	1 x 155 W	1 x 225 W

3 Functional Diagrams

3.1 What Is in This Chapter?

Introduction

This chapter contains the following information:

- Functional diagrams
- Pipe connection diameters.

Functional diagrams

This chapter contains the following functional diagrams:

Functional diagram	See page
3.2–Indoor Piping	1–56
3.3–Pipe Connection Diameters	1–58
3.4–Piping Components	1–59

1

3.2 Indoor Piping

All indoor units

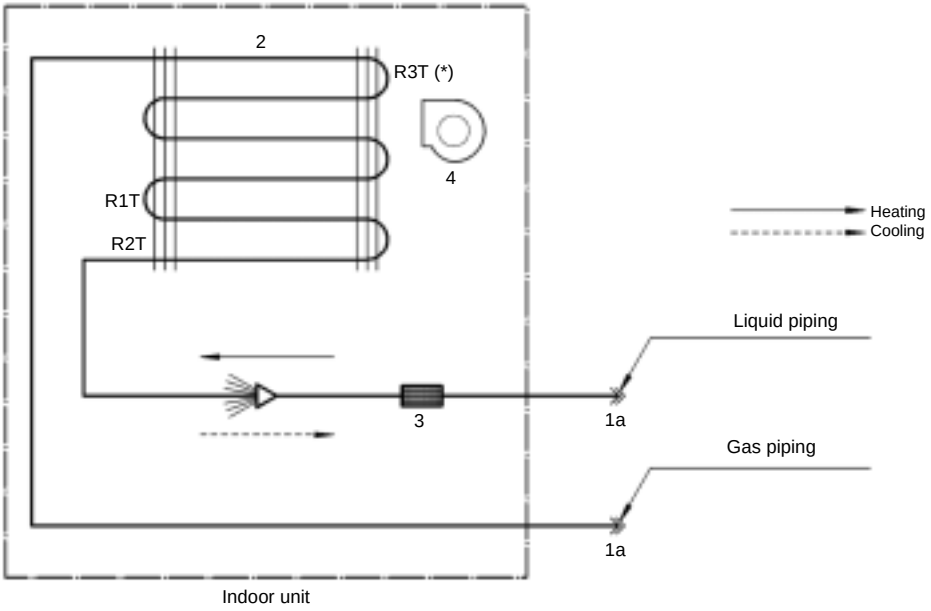

(*) Remark

R3T only present on following types of indoor units:

- FCQ35~60B
- FFQ25~60B
- FBQ35~60B
- FHQ35~60B

Piping components

The table below contains the different components of the functional diagrams.

No.	Component	Function / remark
1a	Flare connection	See pipe connection diameter.
2	Heat exchanger	The heat exchanger is of the multi louvre fin type. Hi-X -tubes and coated waffle louvre fins are used.
3	Filter	The filter is used to collect impurities, which may enter the system during installation and is also used to avoid blockage of the capillaries and other fine mechanical parts of the unit.
4	Fan	Depending on indoor unit type, an axial or centrifugal fan is used. See chapter on specifications for the exact type.
5	Thermistor	■ R1T: Air thermistor ■ R2T: Liquid thermistor ■ R3T: Coil thermistor (*)

(*) Remark

Sensor R3T on indoor coil of FCQ35~60B, FFQ35~60B, FBQ35~60B & FHQ35~60BU is not used when connected to sky-air outdoor units (RR, RQ, RZQ).

1

3.3 Pipe Connection Diameters

Indoor units

The table below contains the refrigerant pipe connection diameters.

Model	∅ Gas pipe (flare)	∅ Liquid pipe (flare)
FCQ35B	9.5 mm	6.4 mm
FCQ50, 60B	12.7 mm	6.4 mm
FCQ71, 100, 125B	15.9 mm	9.5 mm
FCQ71, 100, 125D	15.9 mm	9.5 mm
FFQ25, 35B	9.5 mm	6.4 mm
FFQ50, 60B	12.7 mm	6.4 mm
FBQ35B	9.5 mm	6.4 mm
FBQ50, 60B	12.7 mm	6.4 mm
FBQ71, 100, 125B	15.9 mm	9.5 mm
FDQ125B	15.9 mm	9.5 mm
FDQ200B	28.6 mm	12.7 mm
FDQ250B	28.6 mm	15.9 mm
FHQ35B	9.5 mm	6.4 mm
FHQ50, 60B	12.7 mm	6.4 mm
FHQ71, 100, 125B	15.9 mm	9.5 mm
FUQ71, 100, 125B	15.9 mm	9.5 mm
FAQ71, 100B	15.9 mm	9.5 mm
FDEQ71, 100, 125B	15.9 mm	9.5 mm

3.4 Piping Components

Components

The table below contains the different components of the functional diagrams.

No.	Component	Function / remark
1a	Flare connection	See pipe connection diameter.
2	Heat exchanger	The heat exchanger is of the multi louvre fin type. Hi-X -tubes and coated waffle louvre fins are used.
3	Filter	The filter is used to collect impurities, which may enter the system during installation and is also used to avoid blockage of the capillaries and other fine mechanical parts of the unit.
4	Fan	
5	Thermistor	■ R1T: Air thermistor ■ R2T: Coil thermistor ■ R3T: Discharge pipe thermistor

4 Wiring Diagrams

4.1 What Is in This Chapter?

Introduction

This chapter contains the wiring diagrams of the indoor units.

Indoor units:

This chapter contains the following wiring diagrams:

Wiring diagram	See page
4.2–FCQ35, 50, 60B	1–62
4.3–FCQ71, 100, 125B	1–64
4.4–FCQ71, 100, 125, 140D	1–66
4.5–FFQ25, 35, 50, 60B	1–68
4.6–FBQ35, 50, 60B	1–70
4.7–FBQ71B	1–72
4.8–FBQ100, 125B	1–74
4.9–FDQ125, 200, 250B	1–76
4.10–FHQ35, 50, 60B	1–78
4.11–FHQ71, 100, 125B	1–80
4.12–FUQ71, 100, 125B	1–82
4.13–FAQ71B	1–84
4.14–FAQ100B	1–86
4.15–FDEQ71B	1–88
4.16–FDEQ100B	1–90
4.17–FDEQ125B	1–92

1

4.2 FCQ35, 50, 60B

Wiring diagram

The illustration below shows the wiring diagram of the unit.

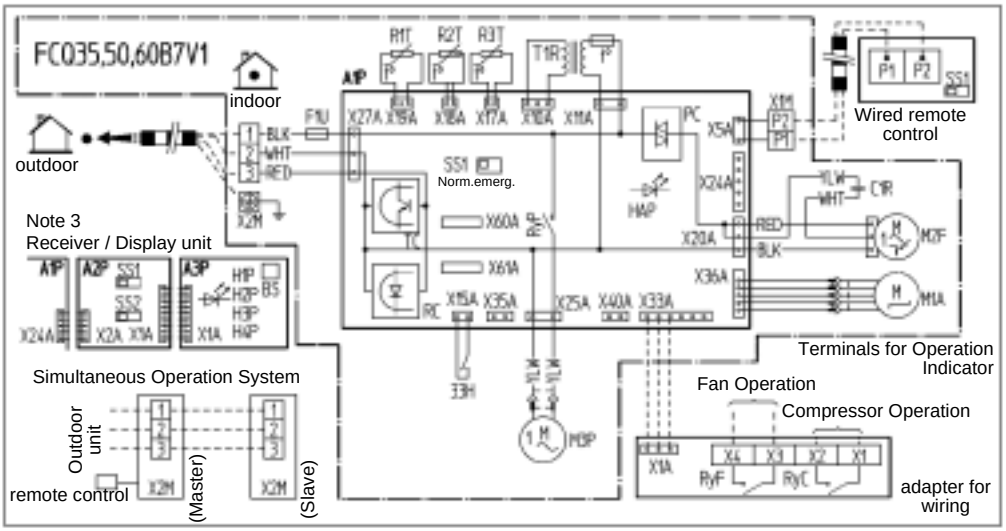

: Field wiring
: Connector
: Wire lamp
: Protective earth (screw)
: Terminal

Colors:
BLK : Black
RED : Red
WHT : White
YLW : Yellow

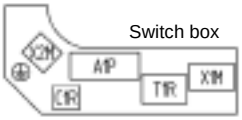

Notes:

1. Use copper conductors only.
2. When using the central remote control, see manual for connection to the unit.
3. X24A is connected when the infrared remote control kit is used.
4. The remote control model varies according to the combination system. See technical data and catalogs before connecting.

33H	Float switch	**Wired remote control**	
A1P	Printed circuit board	SS1	Selector switch (Main/Sub)
C1R	Capacitor (M2F)		
F1U	Fuse (5A, 250V)	**Receiver/display unit (attached to infrared remote control)**	
HAP	Light emitting diode (Service monitor-green)	A2P, A3P	Printed circuit board
M1A	Motor (Swing flap)	BS	ON/OFF button
M2F	Motor (Indoor fan)	H1P	Light emitting diode (on-red)
M3P	Motor (Drain pump)	H2P	Light emitting diode (timer-green)
Q1F	Thermo switch (M2F embedded)	H3P	Light emitting diode (filter sign-red)
R1T	Thermistor (Air)	H4P	Light emitting diode (defrost-orange)
R2T	Thermistor (Liquid)	SS1	Selector switch (Main/Sub)
R3T	Thermistor (Coil)	SS2	Selector switch (Wireless address set)
RyP	Magnetic relay (M3P)		
SS1	Selector switch (Emergency)	**adapter for wiring**	
T1R	Transformer (220V~240V/22 V)	RyC, RyF	Magnetic relay
X1M	Terminal strip (Power)		
X2M	Terminal strip (Control)	**Connector for optional parts**	
PC	Phase control circuit	X60A, X61A	Connector (Interface adapter for Sky Air series)
RC	Signal receiver circuit	X33A	Connector (adapter for wiring)
TC	Signal transmission circuit	X35A	Connector (Group control adapter)
		X40A	Connector (Remote ON/OFF, Forced OFF)

1

4.3 FCQ71, 100, 125B

Wiring diagram

The illustration below shows the wiring diagram of the unit.

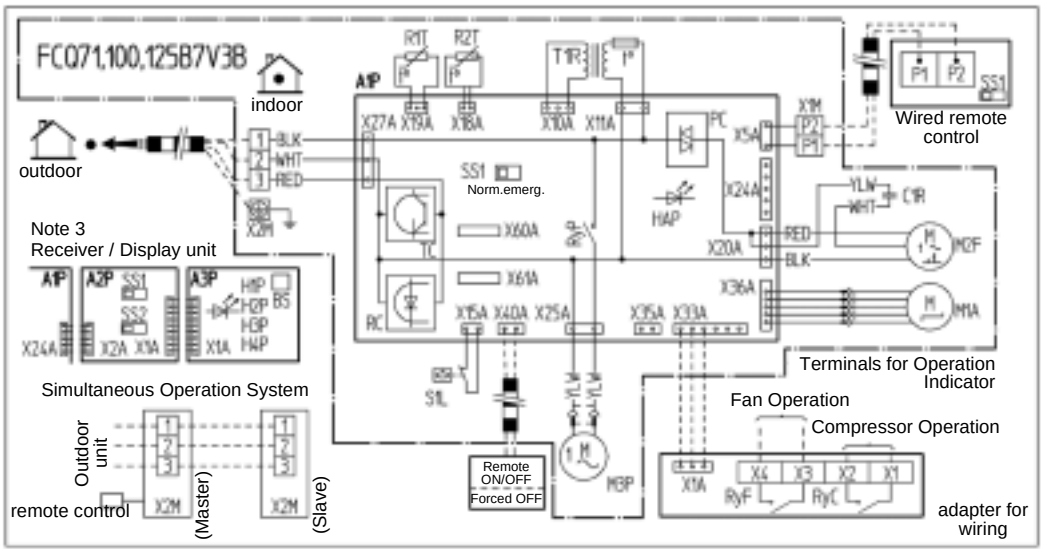

: Field wiring
: Connector
: Wire lamp
: Protective earth (screw)
: Terminal

Colors:
BLK : Black
RED : Red
WHT : White
YLW : Yellow

Notes:

1. Use copper conductors only.
2. When using the central remote control, see manual for connection to the unit.
3. X24A is connected when the infrared remote control kit is used.
4. The remote control model varies according to the combination system. See technical data and catalogs before connecting.

S1L	Float switch
A1P	Printed circuit board
C1R	Capacitor (M2F)
HAP	Light emitting diode (Service monitor-green)
M1A	Motor (Swing flap)
M2F	Motor (Indoor fan)
M3P	Motor (Drain pump)
Q1F	Thermo switch (M2F embedded)
R1T	Thermistor (Air)
R2T	Thermistor (Liquid)
RyP	Magnetic relay (M3P)
SS1	Selector switch (Emergency)
T1R	Transformer (220V~240V/22 V)
X1M	Terminal strip (Power)
X2M	Terminal strip (Control)
PC	Phase control circuit
RC	Signal receiver circuit
TC	Signal transmission circuit
Wired remote control	
SS1	Selector switch (Main/Sub)

Receiver/display unit (attached to infrared remote control)	
A2P, A3P	Printed circuit board
BS	ON/OFF button
H1P	Light emitting diode (on-red)
H2P	Light emitting diode (timer-green)
H3P	Light emitting diode (filter sign-red)
H4P	Light emitting diode (defrost-orange)
SS1	Selector switch (Main/Sub)
SS2	Selector switch (Wireless address set)
adapter for wiring	
RyC, RyF	Magnetic relay
Connector for optional parts	
X60A, X61A	Connector (Interface adapter for Sky Air series)
X33A	Connector (adapter for wiring)
X35A	Connector (Group control adapter)
X40A	Connector (Remote ON/OFF, Forced OFF)

1

4.4 FCQ71, 100, 125, 140D

Wiring diagram

The illustration below shows the wiring diagram of the unit.

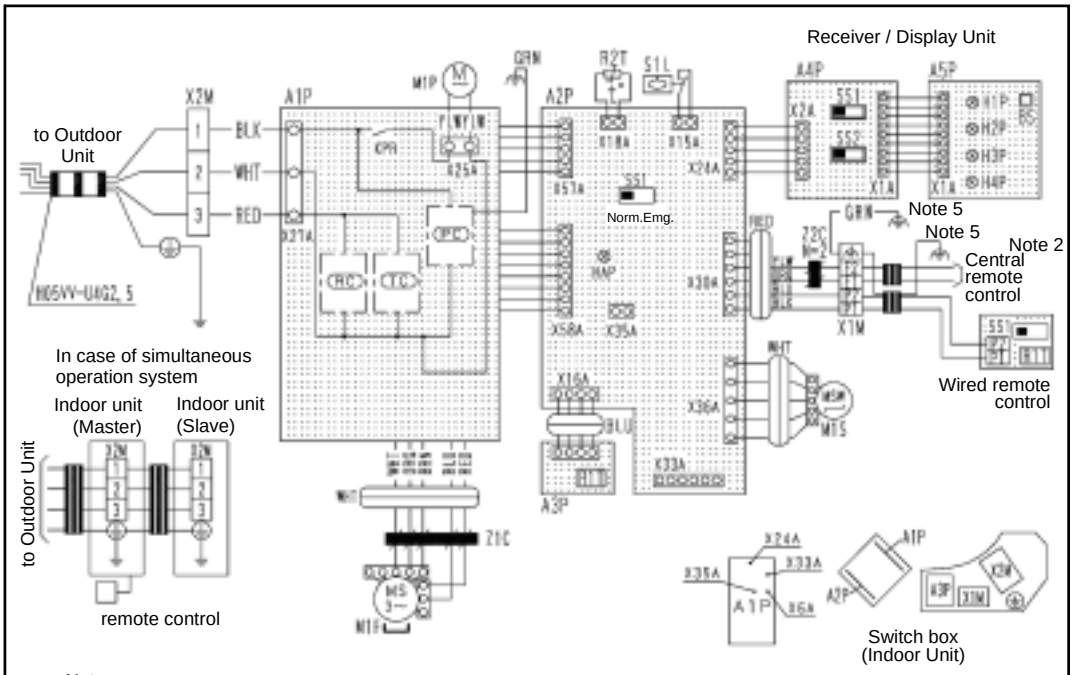

Notes

1. : Terminal
   : Connector
   : Field wiring
2. In case using central remote control, connect it to the unit in accordance with the attached installation manual.
3. remote control model varies according to the combination system, confirm engineering materials and catalogs, etc. before connecting.
4. Confirm the method of setting the selector switch (SS1, SS2) by installation manual and engineering data, etc.
5. Ground the shield of the remote control cord to the indoor unit (in case of using shield wire).
6. Symbols show as follows:
   RED : Red
   BLK : Black
   WHT : White
   YLW : Yellow
   GRN : Green
   ORG : Orange
   BRN : Brown
   PNK : Pink
   GRY : Gray
   BLU : Blue

A1P	Printed circuit board (Power supply)	**Receiver/display unit (attached to infrared remote control)**	
A2P	Printed circuit board (Control)	A4P	Printed circuit board
A3P	Printed circuit board (Humidity sensor unit)	A5P	Printed circuit board
HAP	Light emitting diode (Service monitor-green)	BS1	Push button (ON/OFF)
KPR	Magnetic relay (M1P)	H1P	Light emitting diode (on-red)
M1F	Motor (Indoor fan)	H2P	Light emitting diode (timer-green)
M1P	Motor (Drain pump)	H3P	Light emitting diode (filter sign-red)
M1S	Motor (Swing flap)	H4P	Light emitting diode (defrost-orange)
R1T	Thermistor (Air)	SS1	Selector switch (Main/Sub)
R2T	Thermistor (Coil)	SS2	Selector switch (Wireless address set)
S1L	Float switch		
SS1	Selector switch (Emergency)	**Wired remote control**	
X1M	Terminal strip	R1T	Thermistor (Air)
X2M	Terminal strip	SS1	Selector switch (Main/Sub)
Z1C	Noise filter		
Z2C	Noise filter	**Connector for optional parts**	
PC	Power circuit	X33A	Connector (adapter for wiring)
RC	Signal receiver circuit	X35A	Connector (Control adapter)
TC	Signal transmission circuit		

1

4.5 FFQ25, 35, 50, 60B

Wiring diagram

The illustration below shows the wiring diagram of the unit.

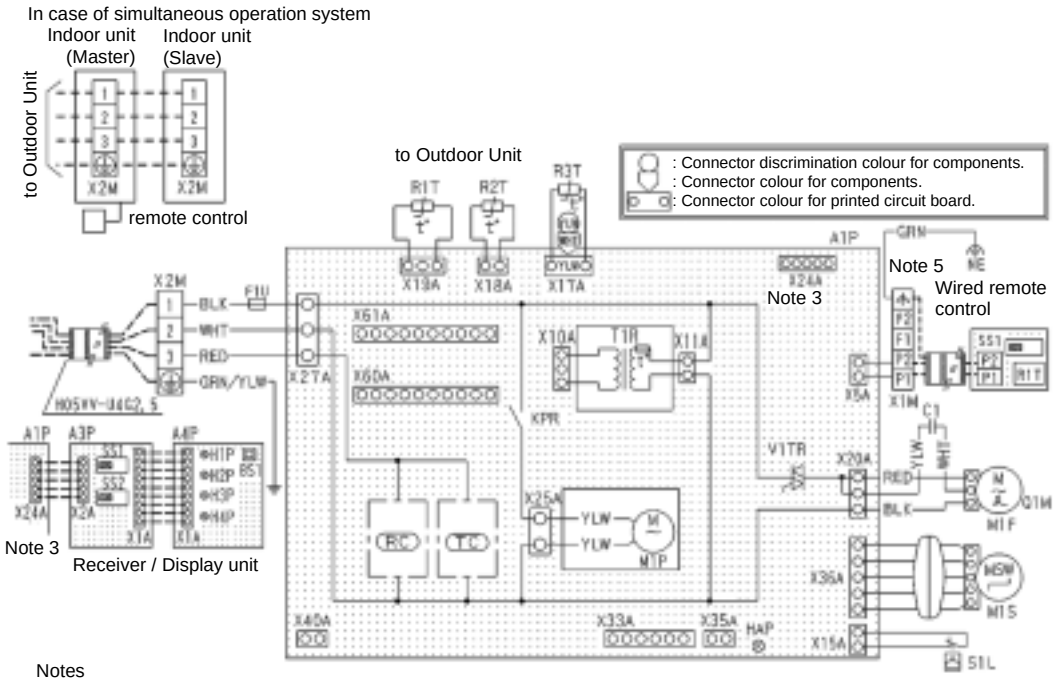

Notes

1. : Terminal
   : Field wiring
   : Connector
2. In case using central remote control, connect it to the unit in accordance with the attached installation manual.
3. X24A is connected when the infrared remote control kit is being used.
4. remote control model varies according to the combination system, confirm engineering materials and catalogs, etc. before connecting.
5. Ground the shield of the remote control cord to the indoor unit (in case of using shield wire).
6. Symbols show as follows:
   BLK : Black
   WHT : White
   YLW : Yellow
   PRP : Purple
   GRY : Gray
   BLU : Blue

A1P	Printed circuit board	**Wired remote control**	
C1	Capacitor (M1F)	R1T	Thermistor (Air)
F1U	Fuse (F5A, 250V)	SS1	Selector switch (Main/Sub)
HAP	Light emitting diode (Service monitor-green)		
KPR	Magnetic relay (M1P)	**infrared remote control (Receiver/display unit)**	
M1F	Motor (Indoor fan)	A3P	Printed circuit board
M1P	Motor (Drain pump)	A4P	Printed circuit board
M1S	Motor (Swing flap)	BS1	Push button (ON/OFF)
Q1M	Thermo switch (M1F embedded)	H1P	Light emitting diode (on-red)
R1T	Thermistor (Air)	H2P	Light emitting diode (timer-green)
R2T	Thermistor (Coil~1)	H3P	Light emitting diode (filter sign-red)
R3T	Thermistor (Coil~2)	H4P	Light emitting diode (defrost-orange)
S1L	Float switch	SS1	Selector switch (Main/Sub)
T1R	Transformer (220~240V/22 V)	SS2	Selector switch (Wireless address set)
V1TR	Phase control circuit		
X1M	Terminal strip	**Connector for optional parts**	
X2M	Terminal strip	X33A	Connector (adapter for wiring)
RC	Signal receiver circuit	X35A	Connector (Group control adapter)
TC	Signal transmission circuit	X40A	Connector (Remote ON/OFF, Forced OFF)
		X60A, X61A	Connector (Interface adapter for Sky Air series)

1

4.6 FBQ35, 50, 60B

Wiring diagram

The illustration below shows the wiring diagram of the unit.

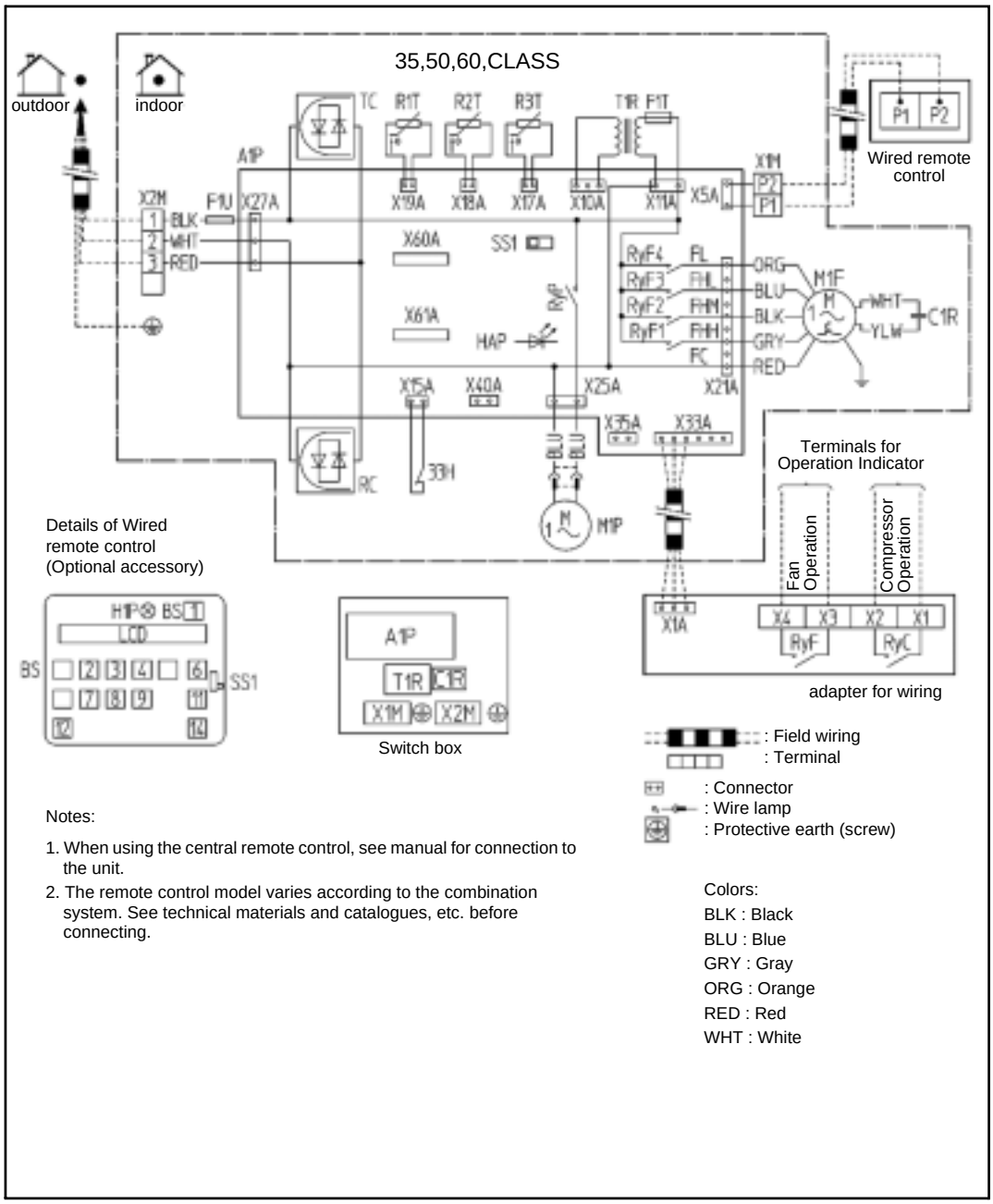

33H	Float switch	**Wired remote control**	
A1P	Printed circuit board	BS1	ON/OFF button
C1R	Capacitor (Fan)	BS2	Timer mode start/stop button
F1U	Fuse (5A, 250V)	BS3, BS8	Programming time button
F1T	Thermal fuse (152°C) (M1F embedded)	BS4, BS9	Temperature setting button
HAP	Light emitting diode (Service monitor-green)	BS6	Operation mode selector button
M1F	Motor (Fan)	BS7	Timer ON/OFF button
M1P	Motor (Drain pump)	BS11	Fan speed control button
R1T	Thermistor (Air)	BS12	Inspection/test operation button
R2T	Thermistor (Liquid)	BS14	Filter sign reset button
R3T	Thermistor (Coil)	H1P	Light emitting diode (Service monitor-red)
RyF1-4	Magnetic relay (Fan)	LCD	Liquid cristal display
RyP	Magnetic relay (Drain pump)	SS1	Selector switch (Main/sub)
SS1	Selector switch (Emergency)		
T1R	Power supply transformer (220~240V/21.8V)	**Connector for optional parts**	
X1M	Terminal strip	X60A, X61A	Connector (Interface adapter for Sky Air/US series)
X2M	Terminal strip		
RC	Signal receiver circuit	X33A	Connector (adapter for wiring)
TC	Signal transmission circuit	X35A	Connector (Group control adapter)
		X40A	Connector (Remote ON/OFF, Forced OFF)
adapter for wiring			
RyC, RyF	Magnetic relay		

1

4.7 FBQ71B

Wiring diagram

The illustration below shows the wiring diagram of the unit.

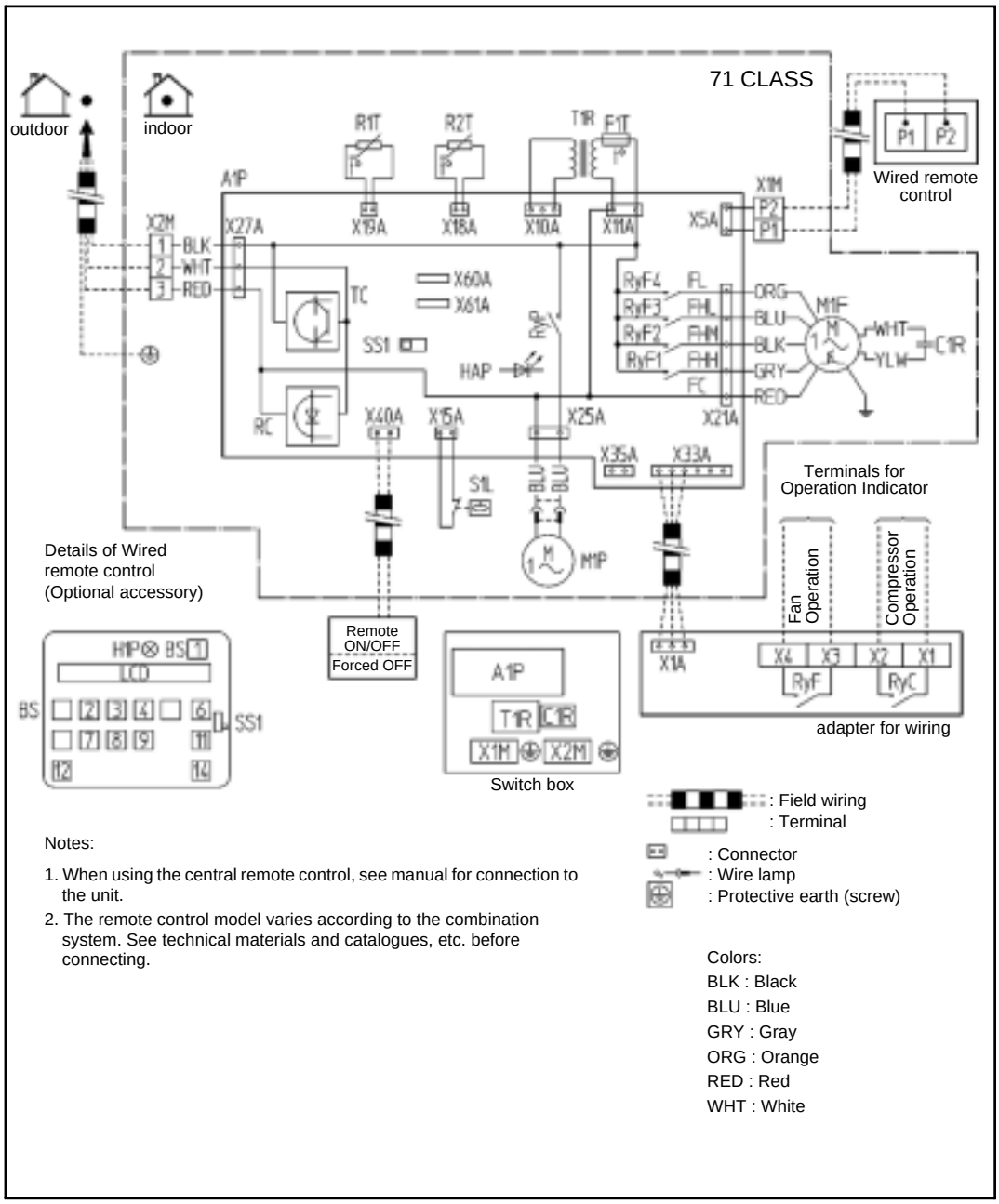

S1L	Float switch	**Wired remote control**	
A1P	Printed circuit board	BS1	ON/OFF button
C1R	Capacitor (Fan)	BS2	Timer mode start/stop button
F1T	Thermal fuse (152°C) (M1F embedded)	BS3, BS8	Programming time button
HAP	Light emitting diode (Service monitor-green)	BS4, BS9	Temperature setting button
M1F	Motor (Fan)	BS6	Operation mode selector button
M1P	Motor (Drain pump)	BS7	Timer ON/OFF button
R1T	Thermistor (Air)	BS11	Fan speed control button
R2T	Thermistor (Coil)	BS12	Inspection/test operation button
RyF1-4	Magnetic relay (Fan)	BS14	Filter sign reset button
RyP	Magnetic relay (Drain pump)	H1P	Light emitting diode (Service monitor-red)
SS1	Selector switch (Emergency)	LCD	Liquid cristal display
T1R	Power supply transformer (220~240V/21.8V)	SS1	Selector switch (Main/sub)
X1M	Terminal strip		
X2M	Terminal strip	**Connector for optional parts**	
RC	Signal receiver circuit	X60A, X61A	Connector (Interface adapter for Sky Air/US series)
TC	Signal transmission circuit		
		X33A	Connector (adapter for wiring)
adapter for wiring		X35A	Connector (Group control adapter)
RyC, RyF	Magnetic relay	X40A	Connector (Remote ON/OFF, Forced OFF)

1

4.8 FBQ100, 125B

Wiring diagram

The illustration below shows the wiring diagram of the unit.

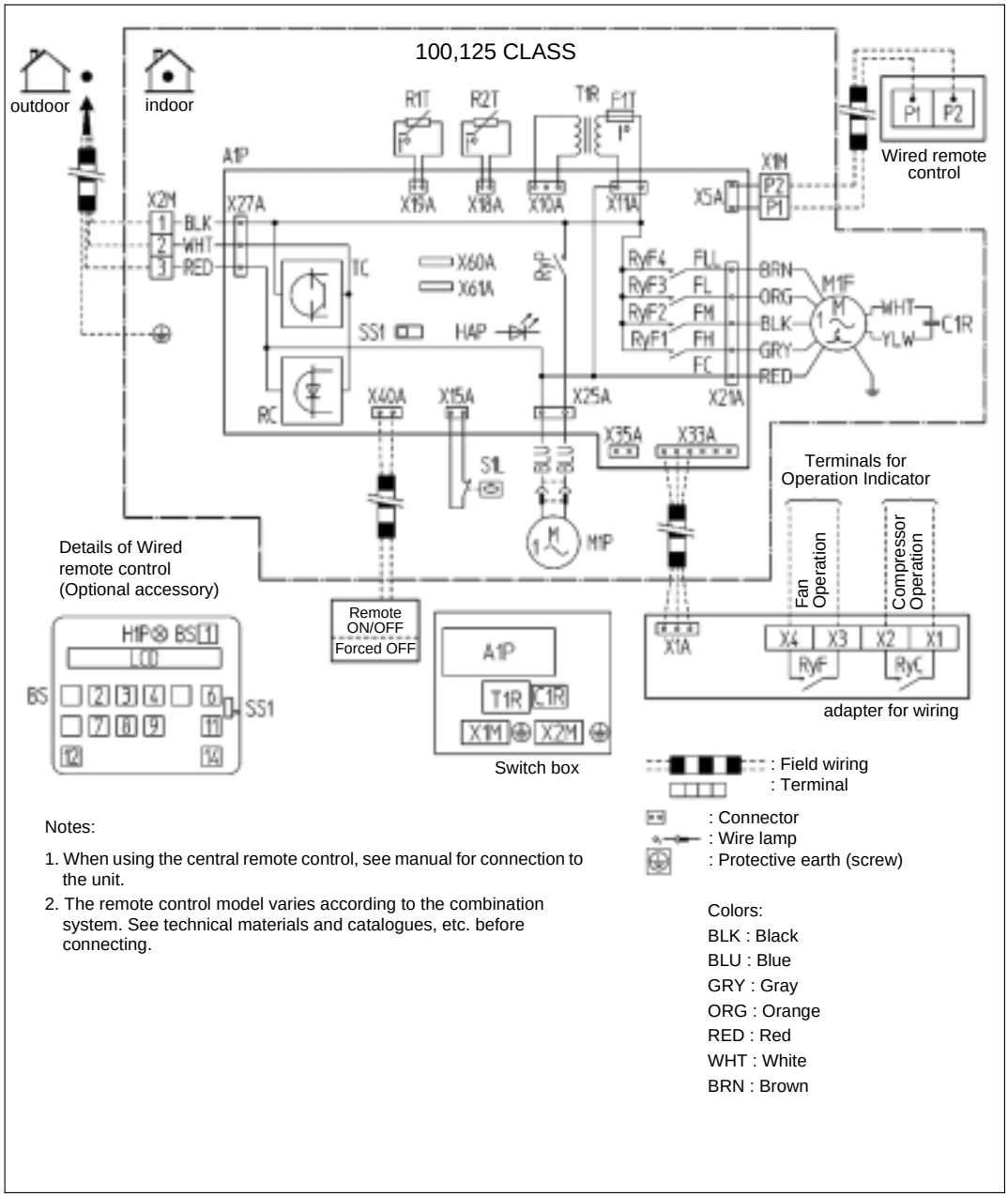

S1L	Float switch	**Wired remote control**	
A1P	Printed circuit board	BS1	ON/OFF button
C1R	Capacitor (Fan)	BS2	Timer mode start/stop button
F1T	Thermal fuse (152°C) (M1F embedded)	BS3, BS8	Programming time button
HAP	Light emitting diode (Service monitor-green)	BS4, BS9	Temperature setting button
M1F	Motor (Fan)	BS6	Operation mode selector button
M1P	Motor (Drain pump)	BS7	Timer ON/OFF button
R1T	Thermistor (Air)	BS11	Fan speed control button
R2T	Thermistor (Coil)	BS12	Inspection/test operation button
RyF1-4	Magnetic relay (Fan)	BS14	Filter sign reset button
RyP	Magnetic relay (Drain pump)	H1P	Light emitting diode (Service monitor-red)
SS1	Selector switch (Emergency)	LCD	Liquid cristal display
T1R	Power supply transformer (220~240V/21.8V)	SS1	Selector switch (Main/sub)
X1M	Terminal strip		
X2M	Terminal strip	**Connector for optional parts**	
RC	Signal receiver circuit	X60A, X61A	Connector (Interface adapter for Sky Air/US series)
TC	Signal transmission circuit		
		X33A	Connector (adapter for wiring)
adapter for wiring		X35A	Connector (Group control adapter)
RyC, RyF	Magnetic relay	X40A	Connector (Remote ON/OFF, Forced OFF)

1

4.9 FDQ125, 200, 250B

Wiring diagram

The illustration below shows the wiring diagram of the unit.

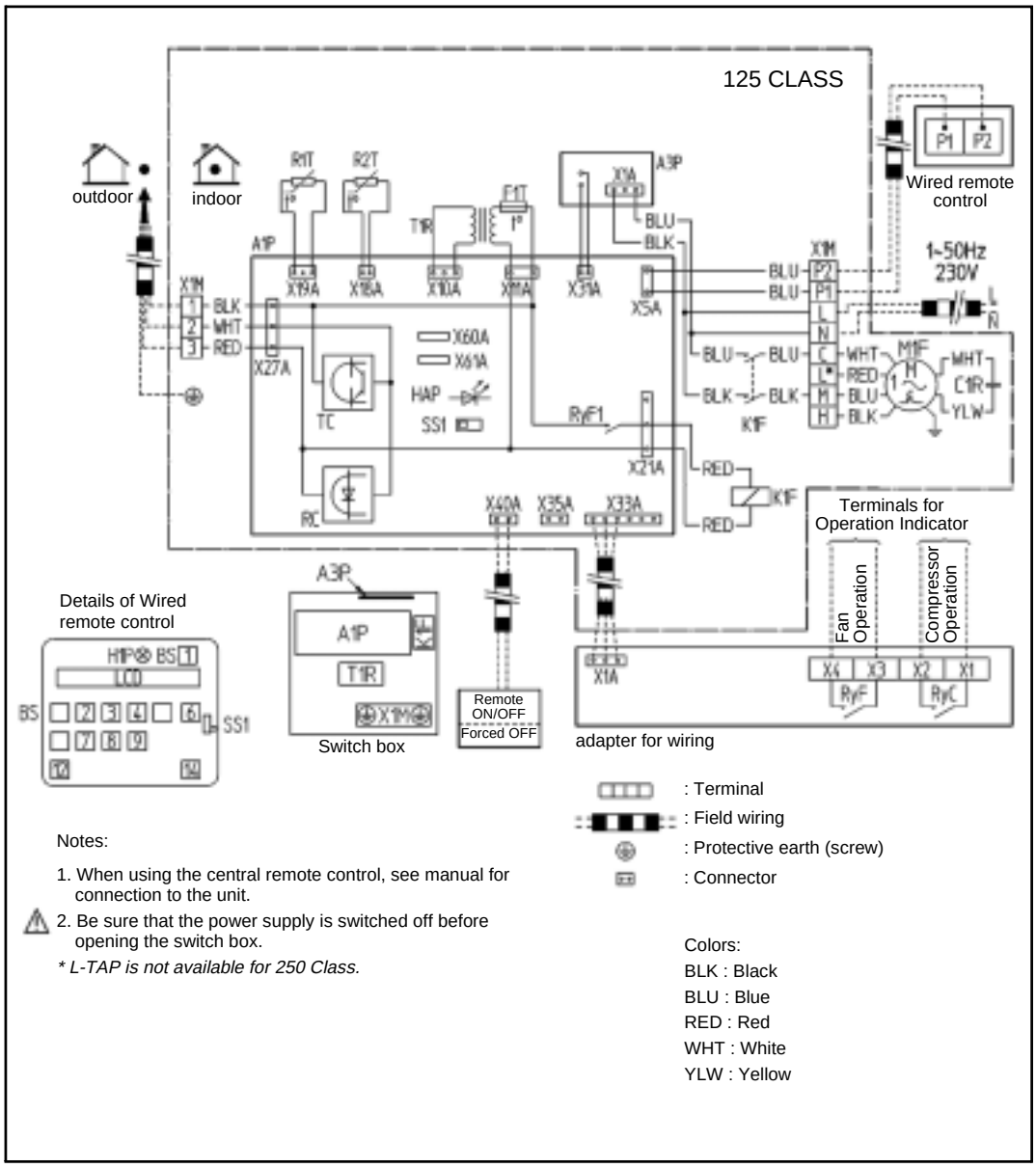

A1P	Printed circuit board	BS4	Temperature setting button up
A3P	Printed circuit board	BS9	Temperature setting button down
C1R	Capacitor (Fan)	BS6	Operation mode selector button
F1T	Thermal fuse (M1F embedded)	BS7	Timer ON/OFF button
HAP	Light emitting diode (Service monitor-green)	BS12	Inspection/test operation button
K1F	Magnetic contactor (M1F)	BS14	Filter sign reset button
M1F	Motor (Fan)	H1P	Light emitting diode (Service monitor-red)
R1T	Thermistor (Air)	LCD	Liquid cristal display
R2T	Thermistor (Coil)	SS1	Selector switch (Main/sub)
RyF1	Magnetic relay (Fan)		
SS1	Selector switch (Emergency)	**adapter for wiring**	
T1R	Transformer (230V/21.8V)	RyC, RyF	Magnetic relay
X1M	Terminal strip		
RC	Signal receiver circuit	**Connector for optional parts**	
TC	Signal transmission circuit	X60A, X61A	Connector (Interface adapter for Sky Air/US series)
Wired remote control		X33A	Connector (adapter for wiring)
BS1	ON/OFF button	X35A	Connector (Group control adapter)
BS2	Timer mode start/stop button	X40A	Connector (Remote ON/OFF, Forced OFF)
BS3, BS8	Programming time button		

1

4.10 FHQ35, 50, 60B

Wiring diagram

The illustration below shows the wiring diagram of the unit.

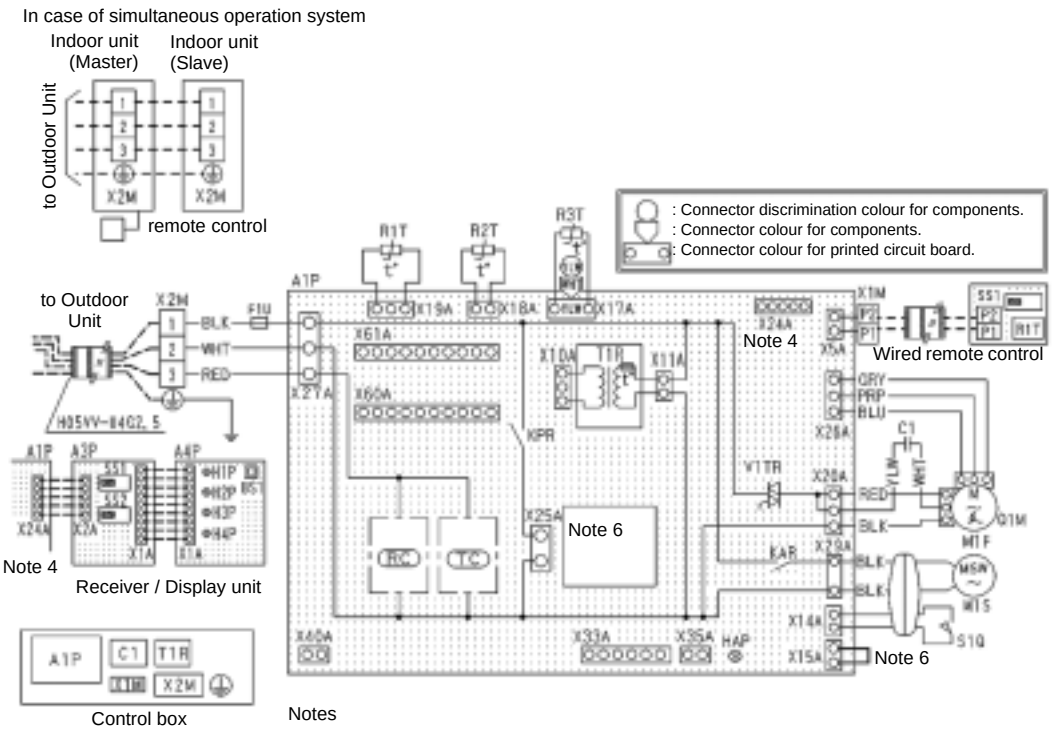

Notes

1. : Terminal
   : Connector
2. : Field wiring
3. In case using central remote control, connect it to the unit in accordance with the attached installation manual.
4. X24A is connected when the infrared remote control kit is being used.
5. remote control model varies according to the combination system, confirm engineering materials and catalogs, etc. before connecting.
6. In case installing the drain pump (M1P), remove the jumper connector of X15A and execute the additional wiring for float switch and drain pump.
7. Symbols show as follows:
   RED : Red
   BLK : Black
   WHT : White
   YLW : Yellow
   PRP : Purple
   GRY : Gray
   BLU : Blue

A1P	Printed circuit board	**Wired remote control**	
C1	Capacitor (M1F)	R1T	Thermistor (Air)
F1U	Fuse (F5A, 250V)	SS1	Selector switch (Main/Sub)
HAP	Light emitting diode (Service monitor-green)		
KAR	Magnetic relay (M1S)	**infrared remote control (Receiver/display unit)**	
KPR	Magnetic relay (M1P)	A3P	Printed circuit board
M1F	Motor (Indoor fan)	A4P	Printed circuit board
M1S	Motor (Swing flap)	BS1	Push button (ON/OFF)
Q1M	Thermo switch (M1F embedded)	H1P	Light emitting diode (on-red)
R1T	Thermistor (Air)	H2P	Light emitting diode (timer-green)
R2T	Thermistor (Coil~1)	H3P	Light emitting diode (filter sign-red)
R3T	Thermistor (Coil~2)	H4P	Light emitting diode (defrost-orange)
S1Q	Limit switch (Swing flap)	SS1	Selector switch (Main/Sub)
T1R	Transformer (220~240V/22 V)	SS2	Selector switch (Wireless address set)
V1TR	Phase control circuit		
X1M	Terminal block	**Connector for optional parts**	
X2M	Terminal block	X15A	Connector (Float switch)
RC	Signal receiver circuit	X25A	Connector (Drain pump)
TC	Signal transmission circuit	X33A	Connector (adapter for wiring)
		X35A	Connector (Group control adapter)
		X40A	Connector (Remote ON/OFF, Forced OFF)
		X60A, X61A	Connector (Interface adapter for Sky Air series)

1

4.11 FHQ71, 100, 125B

Wiring diagram

The illustration below shows the wiring diagram of the unit.

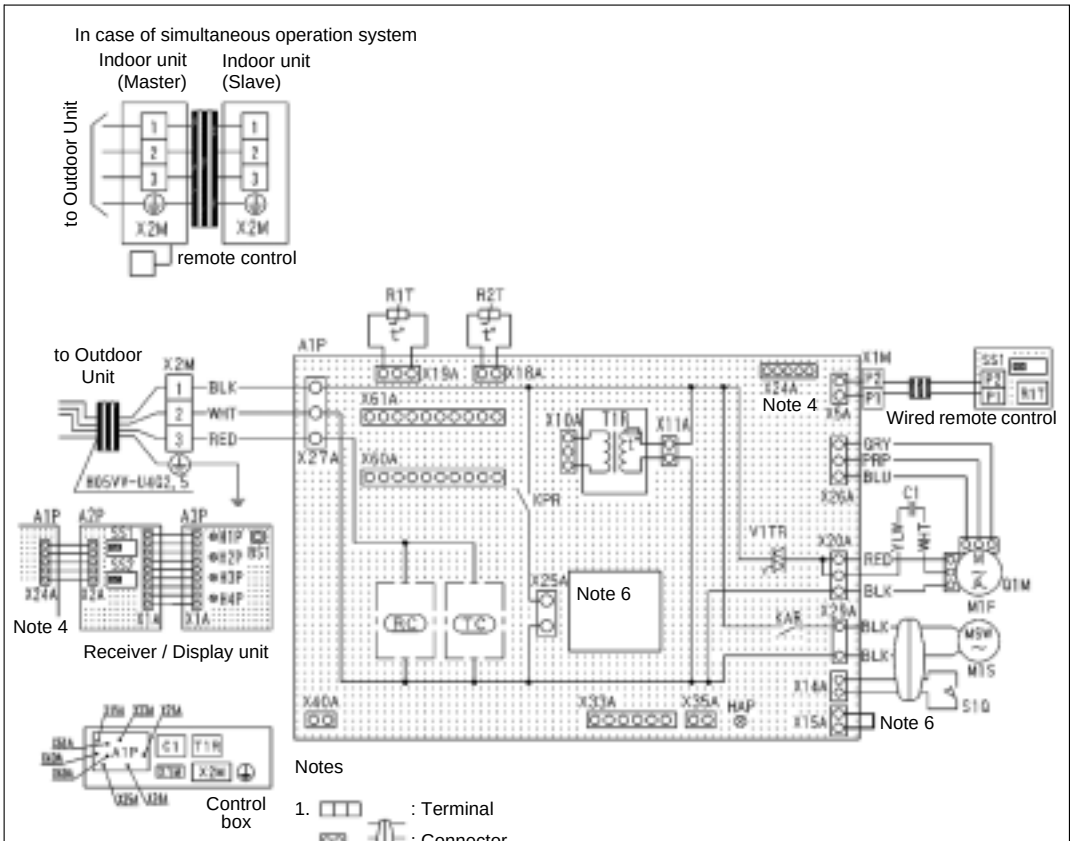

Notes

1. : Terminal
   : Connector
2. : Field wiring
3. In case using central remote control, connect it to the unit in accordance with the attached installation manual.
4. X24A is connected when the infrared remote control kit is being used.
5. remote control model varies according to the combination system, confirm engineering materials and catalogs, etc. before connecting.
6. In case installing the drain pump (M1P), remove the jumper connector of X15A and execute the additional wiring for float switch and drain pump.
7. Symbols show as follows:
   RED : Red
   BLK : Black
   WHT : White
   YLW : Yellow
   PRP : Purple
   GRY : Gray
   BLU : Blue

A1P	Printed circuit board	**infrared remote control (Receiver/display unit)**	
C1	Capacitor (M1F)	A2P	Printed circuit board
HAP	Light emitting diode (Service monitor-green)	A3P	Printed circuit board
KAR	Magnetic relay (M1S)	BS1	Push button (ON/OFF)
KPR	Magnetic relay (M1P)	H1P	Light emitting diode (on-red)
M1F	Motor (Indoor fan)	H2P	Light emitting diode (timer-green)
M1S	Motor (Swing flap)	H3P	Light emitting diode (filter sign-red)
Q1M	Thermo switch (M1F embedded)	H4P	Light emitting diode (defrost-orange)
R1T	Thermistor (Air)	SS1	Selector switch (Main/Sub)
R2T	Thermistor (Coil)	SS2	Selector switch (Wireless address set)
S1Q	Limit switch (Swing flap)		
T1R	Transformer (220~240V/22 V)	**Connector for optional parts**	
V1TR	Phase control circuit	X15A	Connector (Float switch)
X1M	Terminal block	X25A	Connector (Drain pump)
X2M	Terminal block	X33A	Connector (adapter for wiring)
RC	Signal receiver circuit	X35A	Connector (Group control adapter)
TC	Signal transmission circuit	X40A	Connector (Remote ON/OFF, Forced OFF)
		X60A, X61A	Connector (Interface adapter for Sky Air series)
Wired remote control			
R1T	Thermistor (Air)		
SS1	Selector switch (Main/Sub)		

1

4.12 FUQ71, 100, 125B

Wiring diagram

The illustration below shows the wiring diagram of the unit.

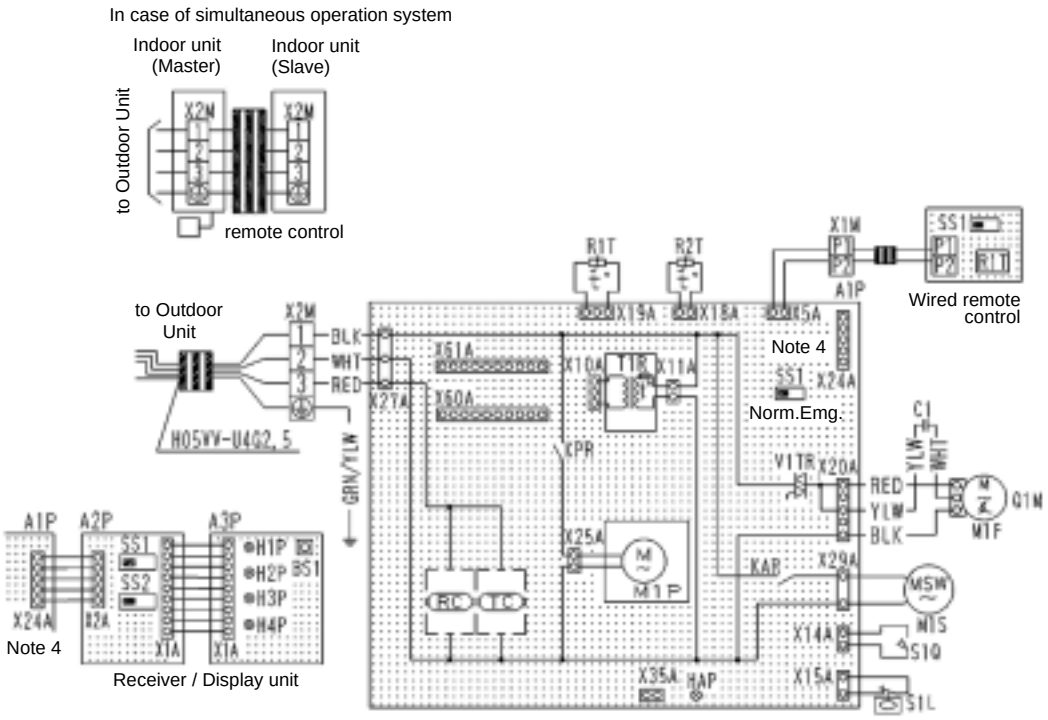

Notes

1. : Terminal
   : Connector
2. : Field wiring
3. In case using central remote control, connect it to the unit in accordance with the attached installation manual.
4. X24A is connected when the infrared remote control kit is being used.
5. remote control model varies according to the combination system, confirm engineering materials and catalogs, etc. before connecting.
6. Symbols show as follows:
   RED : Red
   BLK : Black
   WHT : White
   YLW : Yellow
   GRN : Green
   BLU : Blue
7. Confirm the method of setting the selector switch (SS1, SS2) by installation manual and engineering materials, etc.

A1P	Printed circuit board	**Wired remote control**	
C1	Capacitor (M1F)	R1T	Thermistor (Air)
HAP	Light emitting diode (Service monitor-green)	SS1	Selector switch (Main/Sub)
KAR	Magnetic relay (M1S)		
KPR	Magnetic relay (M1P)	**infrared remote control (Receiver/display unit)**	
M1F	Motor (Indoor fan)	A2P	Printed circuit board
M1P	Motor (Drain pump)	A3P	Printed circuit board
M1S	Motor (Swing flap)	BS1	Push button (ON/OFF)
Q1M	Thermo switch (M1F embedded)	H1P	Light emitting diode (on-red)
R1T	Thermistor (Air)	H2P	Light emitting diode (timer-green)
R2T	Thermistor (Coil)	H3P	Light emitting diode (filter sign-red)
S1L	Float switch	H4P	Light emitting diode (defrost-orange)
S1Q	Limit switch (Swing flap)	SS1	Selector switch (Main/Sub)
SS1	Selector switch (Emergency)	SS2	Selector switch (Wireless address set)
T1R	Transformer (220~240V/22 V)		
V1TR	Phase control circuit	**Connector for optional parts**	
X1M	Terminal block	X35A	Connector (Group control adapter)
X2M	Terminal block	X60A, X61A	Connector (Interface adapter for Sky Air series)
RC	Signal receiver circuit		
TC	Signal transmission circuit		

1

4.13 FAQ71B

Wiring diagram

The illustration below shows the wiring diagram of the unit.

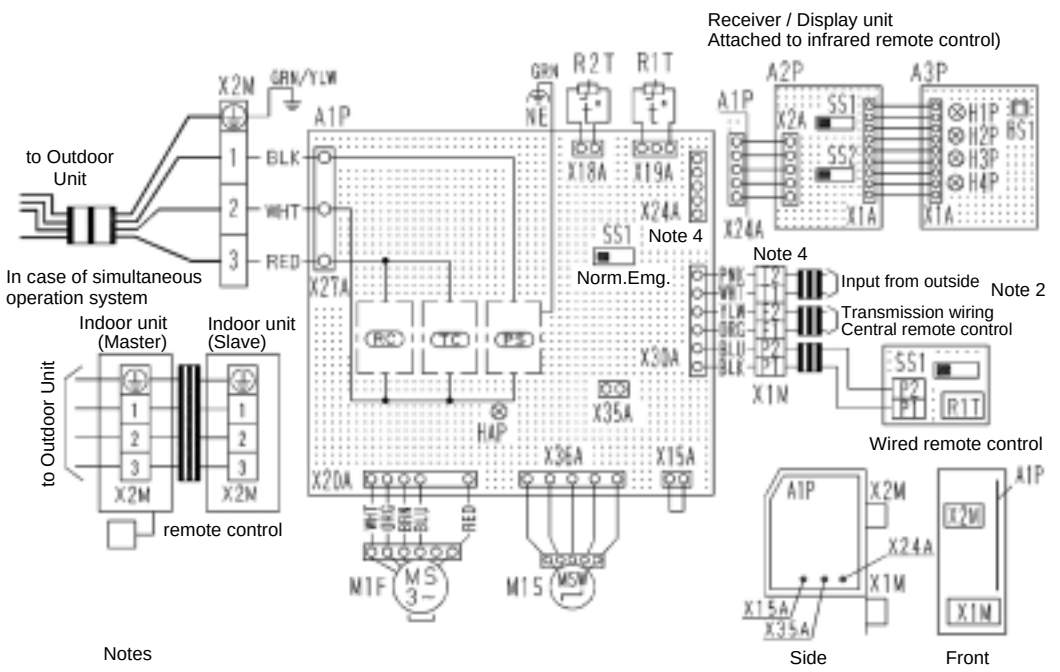

Notes

1. : Terminal
   : Connector
   : Field wiring
2. In case using central remote control, connect it to the unit in accordance with the attached installation manual.
3. remote control model varies according to the combination system, confirm engineering materials and catalogs, etc. before connecting.
4. X24A is connected when the infrared remote control kit is being used.
5. Shows short circuit connector.
6. Symbols show as follows:
   RED : Red
   WHT : White
   GRN : Green
   BLK : Black
   ORG : Orange
   BRN : Brown
   BLU : Blue
   YLW : Yellow
   PNK : Pink
7. Confirm the method of setting the selector switch (SS1, SS2) of wired remote control and infrared remote control by installation manual and engineering data, etc.

A1P	Printed circuit board	**infrared remote control (Receiver/display unit)**	
HAP	Light emitting diode (Service monitor-green)	A2P	Printed circuit board
M1F	Motor (Indoor fan)	A3P	Printed circuit board
M1S	Motor (Swing flap)	BS1	Push button (ON/OFF)
R1T	Thermistor (Air)	H1P	Light emitting diode (on-red)
R2T	Thermistor (Coil)	H2P	Light emitting diode (timer-green)
SS1	Selector switch (Emergency)	H3P	Light emitting diode (filter sign-red)
X1M	Terminal block	H4P	Light emitting diode (defrost-orange)
X2M	Terminal block	SS1	Selector switch (Main/Sub)
PS	Power supply	SS2	Selector switch (Wireless address set)
RC	Signal receiver circuit		
TC	Signal transmission circuit	**Connector for optional parts**	
		X15A	Connector (Float switch)
Wired remote control		X35A	Connector (Group control adapter)
R1T	Thermistor (Air)		
SS1	Selector switch (Main/Sub)		

1

4.14 FAQ100B

Wiring diagram

The illustration below shows the wiring diagram of the unit.

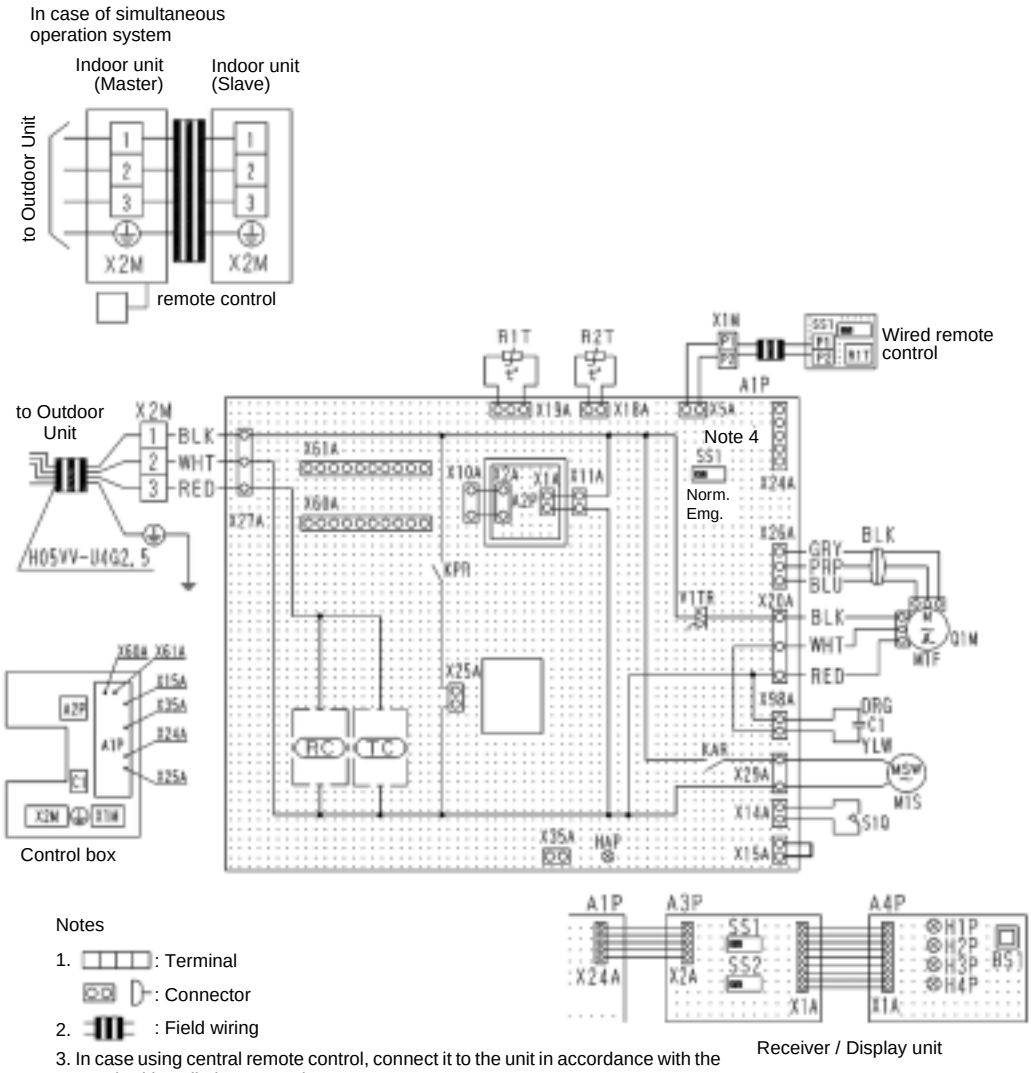

Notes

1. : Terminal
   : Connector
2. : Field wiring
3. In case using central remote control, connect it to the unit in accordance with the attached installation manual.
4. X24A is connected when the infrared remote control kit is being used.
5. remote control model varies according to the combination system, confirm engineering materials and catalogs, etc. before connecting.
6. Symbols show as follows:
   RED : Red
   BLK : Black
   WHT : White
   YLW : Yellow
   ORG : Orange
   GRY : Gray
   PRP : Purple
   BLU : Blue
7. Confirm the method of setting the selector switch (SS1, SS2) by installation manual and engineering data, etc.
8. X15A, X25A are connected when the drain up kit is being used. Connect it to the kit in accordance with the attached installation manual.

A1P	Printed circuit board	**infrared remote control (Receiver/display unit)**	
A2P	Printed circuit board (Transformer 230V/16V)	A3P	Printed circuit board
C1	Capacitor (M1F)	A4P	Printed circuit board
HAP	Light emitting diode (Service monitor-green)	BS1	Push button (ON/OFF)
KAR	Magnetic relay (M1S)	H1P	Light emitting diode (on-red)
KPR	Magnetic relay (M1P)	H2P	Light emitting diode (timer-green)
M1F	Motor (Indoor fan)	H3P	Light emitting diode (filter sign-red)
M1S	Motor (Swing flap)	H4P	Light emitting diode (defrost-orange)
Q1M	Thermo switch (M1F embedded)	SS1	Selector switch (Main/Sub)
R1T	Thermistor (Air)	SS2	Selector switch (Wireless address set)
R2T	Thermistor (Coil)		
S1Q	Limit switch (Swing flap)	**Connector for optional parts**	
SS1	Selector switch (Emergency)	X15A	Connector (Float switch)
V1TR	Phase control circuit	X25A	Connector (Drain pump)
X1M	Terminal block	X35A	Connector (Group control adapter)
X2M	Terminal block	X60A, X61A	Connector (Interface adapter for Sky Air series)
RC	Signal receiver circuit		
TC	Signal transmission circuit	**Wired remote control**	
		R1T	Thermistor (Air)
		SS1	Selector switch (Main/Sub)

1

4.15 FDEQ71B

Wiring diagram

The illustration below shows the wiring diagram of the unit.

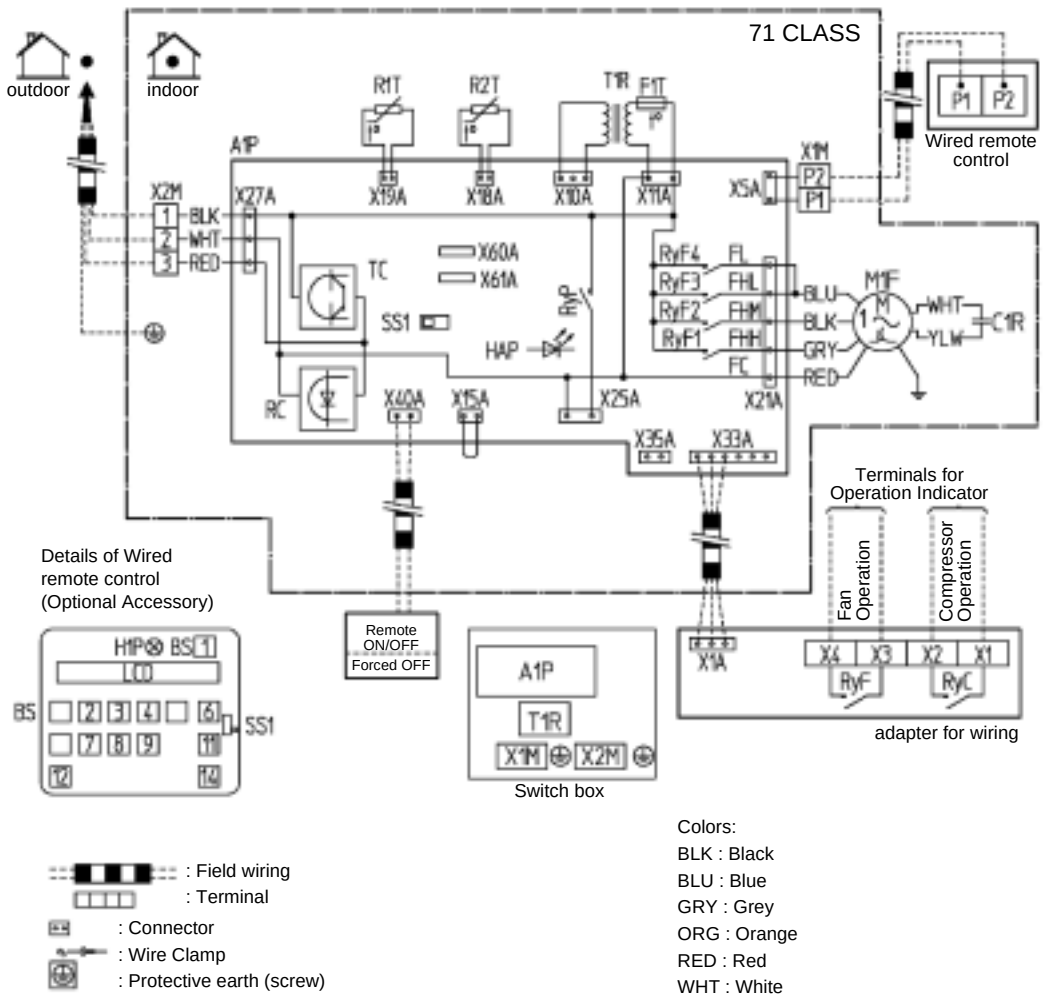

Notes:

1. When using the central remote control, see manual for connection to the unit.
2. The remote control model varies according to the combination system.
   See technical materials and catalogues, etc. before connecting.

A1P	Printed circuit board	**Wired remote control**	
C1R	Capacitor (Fan)	BS1	ON/OFF button
F1T	Thermal fuse (136°C) (T1R embedded)	BS2	Timer mode start/stop button
HAP	Light emitting diode (Service monitor-green)	BS3, BS8	Programming time button
M1F	Motor (Fan)	BS4, BS9	Temperature setting button
R1T	Thermistor (Air)	BS6	Operation mode selector button
R2T	Thermistor (Coil)	BS7	Timer ON/OFF button
RyF1-4	Magnetic relay (Fan)	BS11	Fan speed control button
RyP	Magnetic relay (Drain pump)	BS12	Inspection/test operation button
SS1	Selector switch (Emergency)	BS14	Filter sign reset button
T1R	Power supply transformer (220~240V/21.8V)	H1P	Light emitting diode (Service monitor-red)
X1M	Terminal strip	LCD	Liquid cristal display
X2M	Terminal strip	SS1	Selector switch (Main/sub)
RC	Signal receiver circuit		
TC	Signal transmission circuit	**Connector for optional parts**	
		X60A, X61A	Connector (Interface adapter for Sky Air/US series)
adapter for wiring			
RyC, RyF	Magnetic relay	X33A	Connector (adapter for wiring)
		X35A	Connector (Group control adapter)
		X40A	Connector (Remote ON/OFF, Forced OFF)

1

4.16 FDEQ100B

Wiring diagram

The illustration below shows the wiring diagram of the unit.

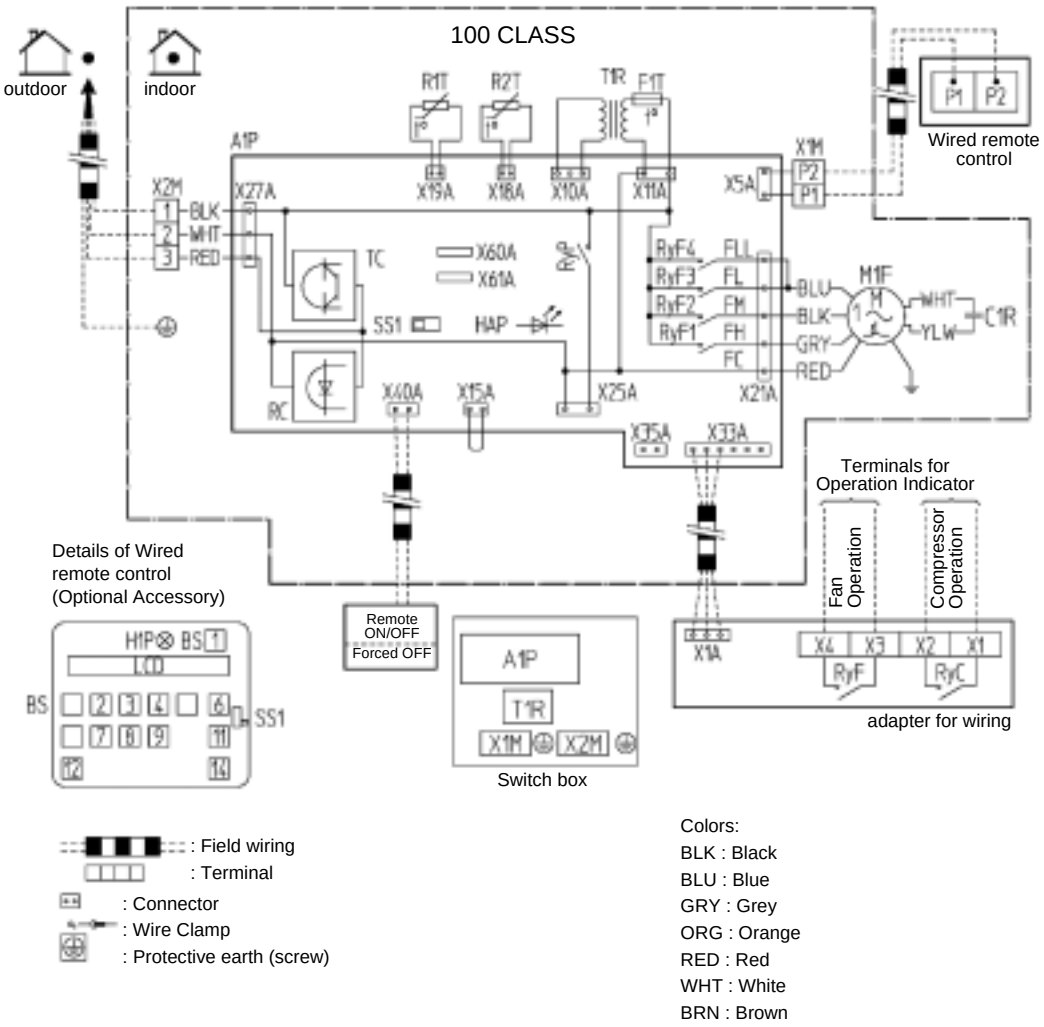

Notes:

1. When using the central remote control, see manual for connection to the unit.
2. The remote control model varies according to the combination system.
   See technical materials and catalogues, etc. before connecting.

A1P	Printed circuit board	**Wired remote control**	
C1R	Capacitor (Fan)	BS1	ON/OFF button
F1T	Thermal fuse (136°C) (T1R embedded)	BS2	Timer mode start/stop button
HAP	Light emitting diode (Service monitor-green)	BS3, BS8	Programming time button
M1F	Motor (Fan)	BS4, BS9	Temperature setting button
R1T	Thermistor (Air)	BS6	Operation mode selector button
R2T	Thermistor (Coil)	BS7	Timer ON/OFF button
RyF1-4	Magnetic relay (Fan)	BS11	Fan speed control button
RyP	Magnetic relay (Drain pump)	BS12	Inspection/test operation button
SS1	Selector switch (Emergency)	BS14	Filter sign reset button
T1R	Power supply transformer (220~240V/21.8V)	H1P	Light emitting diode (Service monitor-red)
X1M	Terminal strip	LCD	Liquid cristal display
X2M	Terminal strip	SS1	Selector switch (Main/sub)
RC	Signal receiver circuit		
TC	Signal transmission circuit	**Connector for optional parts**	
		X60A, X61A	Connector (Interface adapter for Sky Air/US series)
adapter for wiring			
RyC, RyF	Magnetic relay	X33A	Connector (adapter for wiring)
		X35A	Connector (Group control adapter)
		X40A	Connector (Remote ON/OFF, Forced OFF)

1

4.17 FDEQ125B

Wiring diagram

The illustration below shows the wiring diagram of the unit.

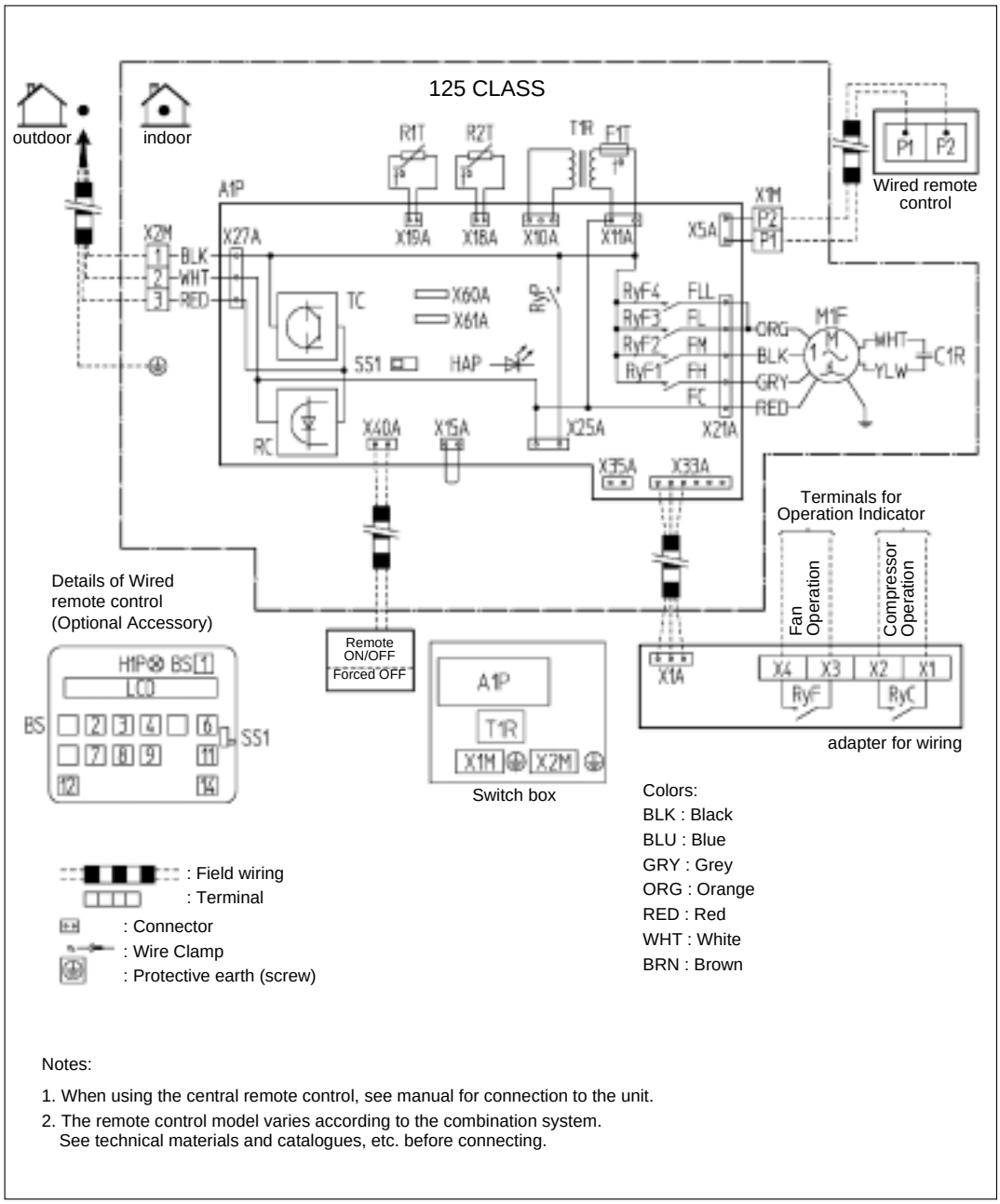

Notes:

1. When using the central remote control, see manual for connection to the unit.
2. The remote control model varies according to the combination system.
   See technical materials and catalogues, etc. before connecting.

A1P	Printed circuit board	**Wired remote control**	
C1R	Capacitor (Fan)	BS1	ON/OFF button
F1T	Thermal fuse (136°C) (T1R embedded)	BS2	Timer mode start/stop button
HAP	Light emitting diode (Service monitor-green)	BS3, BS8	Programming time button
M1F	Motor (Fan)	BS4, BS9	Temperature setting button
R1T	Thermistor (Air)	BS6	Operation mode selector button
R2T	Thermistor (Coil)	BS7	Timer ON/OFF button
RyF1-4	Magnetic relay (Fan)	BS11	Fan speed control button
RyP	Magnetic relay (Drain pump)	BS12	Inspection/test operation button
SS1	Selector switch (Emergency)	BS14	Filter sign reset button
T1R	Power supply transformer (220~240V/21.8V)	H1P	Light emitting diode (Service monitor-red)
X1M	Terminal strip	LCD	Liquid cristal display
X2M	Terminal strip	SS1	Selector switch (Main/sub)
RC	Signal receiver circuit		
TC	Signal transmission circuit	**Connector for optional parts**	
		X60A, X61A	Connector (Interface adapter for Sky Air/US series)
adapter for wiring			
RyC, RyF	Magnetic relay	X33A	Connector (adapter for wiring)
		X35A	Connector (Group control adapter)
		X40A	Connector (Remote ON/OFF, Forced OFF)

5 Switch Box Layout

5.1 What Is in This Chapter?

Introduction

This chapter shows the switch box components.

Indoor units

This chapter contains the following switch box layouts:

PCB layout	See page
5.2–FCQ35, 50, 60, 71B	1–96
5.3–FCQ100, 125B	1–97
5.4–FCQ71, 100, 125 140D	1–98
5.5–FFQ25, 35, 50, 60B	1–99
5.6–FBQ35, 50, 60, 71, 100, 125B	1–100
5.7–FDQ125, 200, 250B	1–101
5.8–FHQ35, 50, 60, 71, 100, 125B	1–102
5.9–FUQ71, 100, 125B	1–103
5.10–FAQ71B	1–104
5.11–FAQ100B	1–105
5.12–FDEQ71, 100, 125B	1–106

1

5.2 FCQ35, 50, 60, 71B

The illustration below shows the switch box layout:

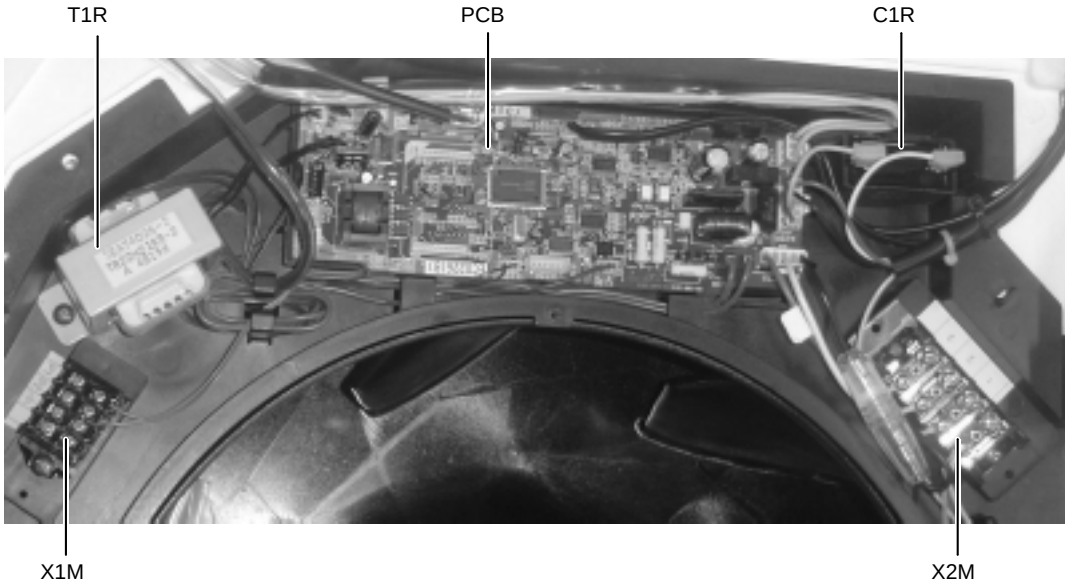

Item	Description
PCB	Printed circuit board
T1R	Transformer
C1R	Fan motor capacitor
X1M	Terminal strip (for remote control P1/P2)
X2M	Terminal strip (interconnection wiring)

5.3 FCQ100, 125B

The illustration below shows the switch box layout:

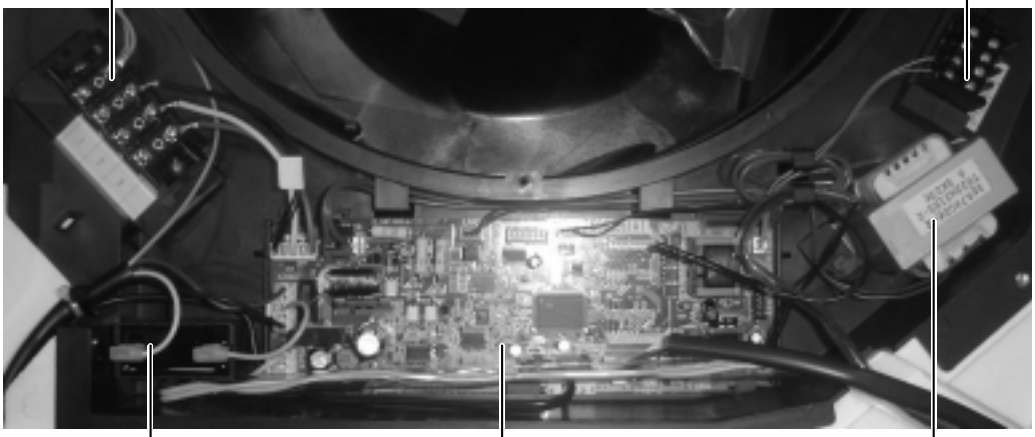

Item	Description
PCB	Printed circuit board
T1R	Transformer
C1R	Fan motor capacitor
X1M	Terminal strip (for remote control P1/P2)
X2M	Terminal strip (interconnection wiring)

1

5.4 FCQ71, 100, 125 140D

The illustration below shows the switch box layout:

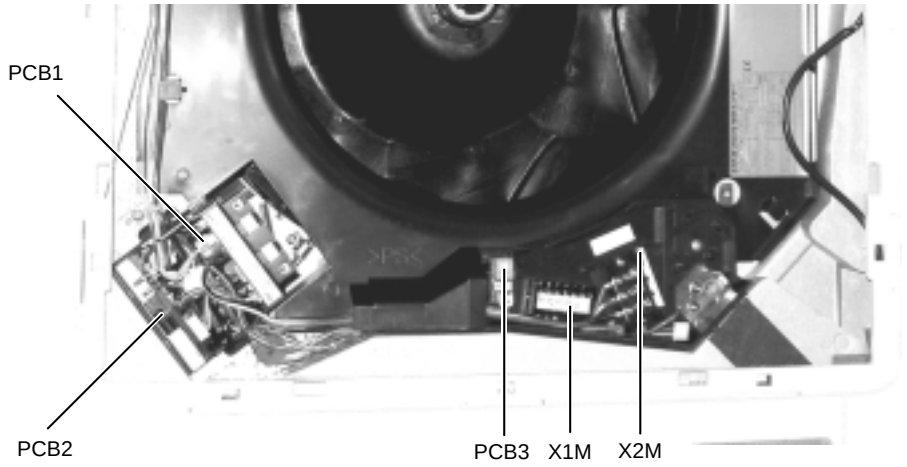

Item	Description
PCB1	Printed circuit board (A1P), power circuit
PCB2	Printed circuit board (A2P), control circuit
PCB3	Printed circuit board (A3P)
X1M	Teminal strip (for P1/P2, F1/F2)
X2M	Teminal strip (for interconnection wiring)

5.5 FFQ25, 35, 50, 60B

The illustration below shows the switch box layout:

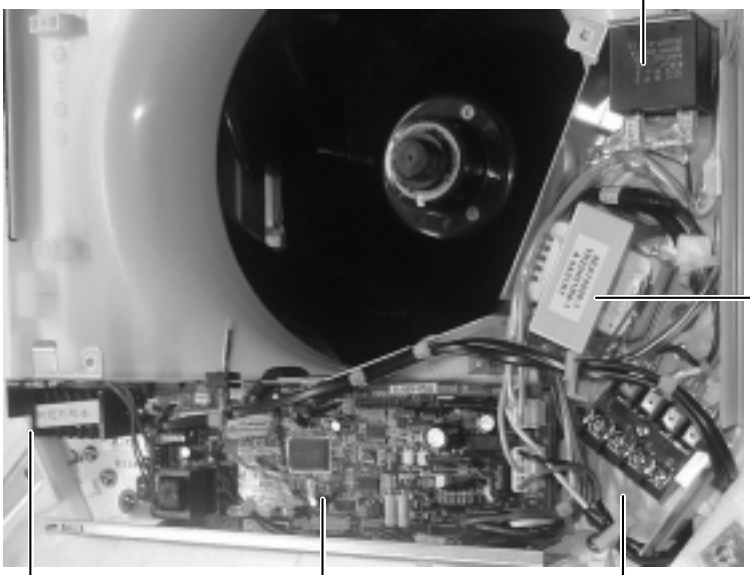

Item	Description
PCB	Printed circuit board
T1R	Transformer
C1R	Fan motor capacitor
X1M	Terminal strip (for remote control P1/P2)
X2M	Terminal strip (interconnection wiring)

1

5.6 FBQ35, 50, 60, 71, 100, 125B

The illustration below shows the switch box layout:

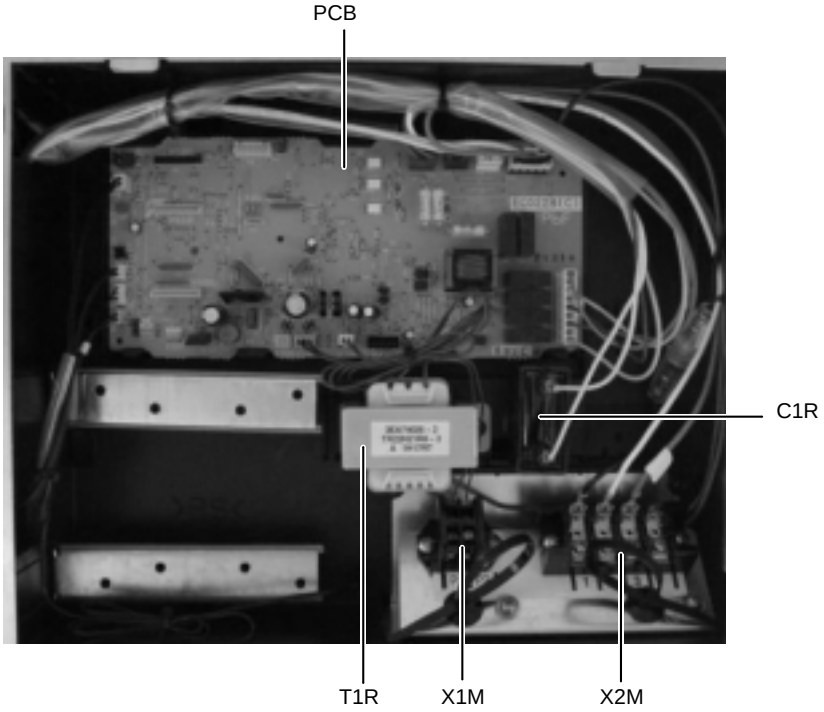

Item	Description
PCB	Printed circuit board
T1R	Transformer
C1R	Fan motor capacitor
X1M	Terminal strip (for remote control P1/P2)
X2M	Terminal strip (interconnection wiring)

5.7 FDQ125, 200, 250B

The illustration below shows the switch box layout:

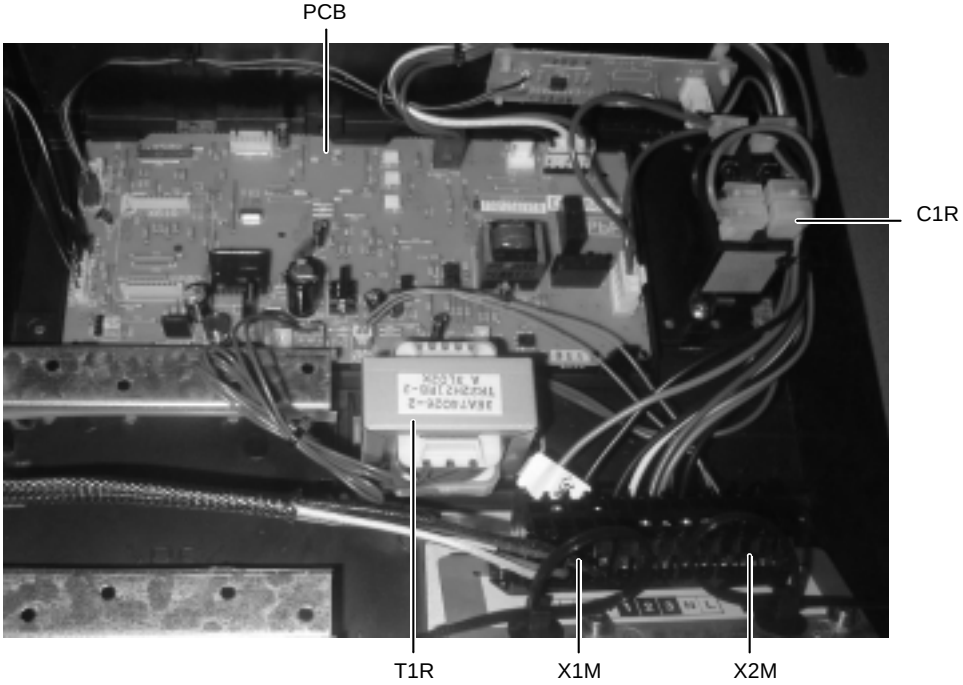

Item	Description
PCB	Printed circuit board
T1R	Transformer
C1R	Fan motor capacitor
X1M	Terminal strip (for remote control P1/P2)
X2M	Terminal strip (interconnection wiring)

1

5.8 FHQ35, 50, 60, 71, 100, 125B

The illustration below shows the switch box layout:

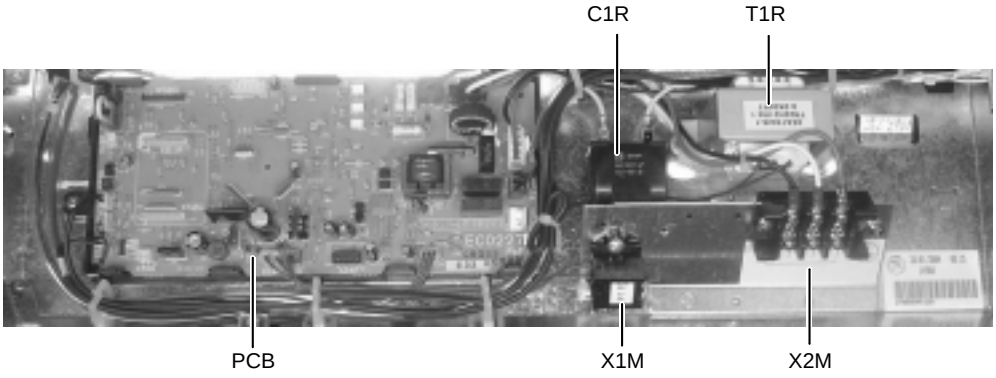

Item	Description
PCB	Printed circuit board
T1R	Transformer
C1R	Fan motor capacitor
X1M	Terminal strip (for remote control P1/P2)
X2M	Terminal strip (interconnection wiring)

5.9 FUQ71, 100, 125B

The illustration below shows the switch box layout:

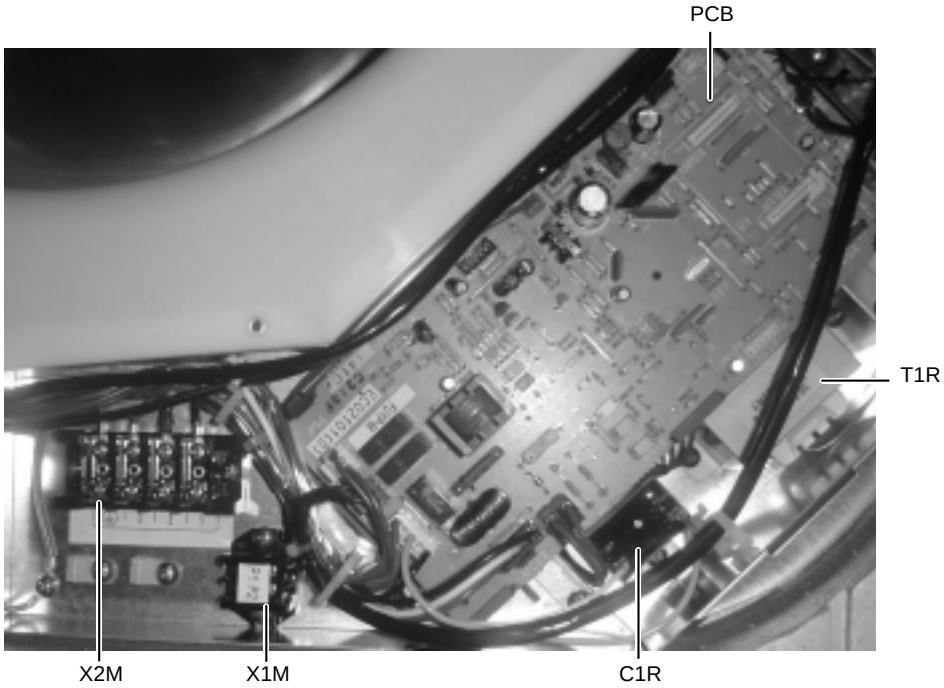

Item	Description
PCB	Printed circuit board
T1R	Transformer
C1R	Fan motor capacitor
X1M	Terminal strip (for remote control P1/P2)
X2M	Terminal strip (interconnection wiring)

1

5.10 FAQ71B

The illustration below shows the switch box layout:

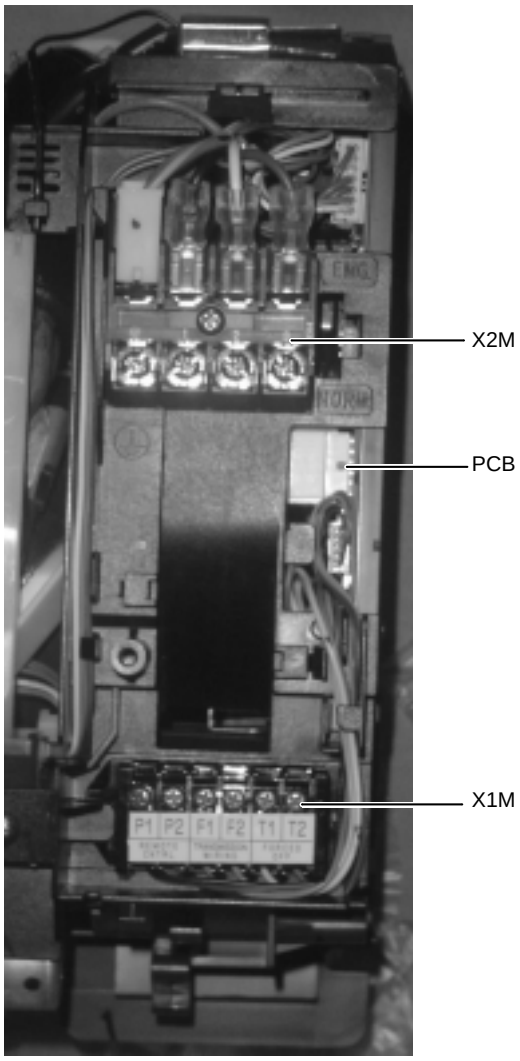

Item	Description
PCB	Printed circuit board
X1M	Terminal strip (for remote control P1/P2, F1/F2, T1/T2)
X2M	Terminal strip (interconnection wiring)

5.11 FAQ100B

The illustration below shows the switch box layout:

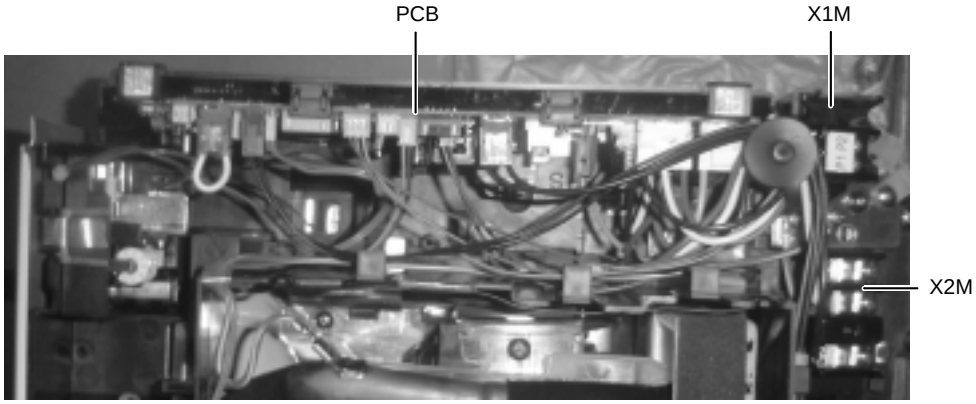

Item	Description
PCB	Printed circuit board
X1M	Terminal strip (for remote control P1/P2)
X2M	Terminal strip (interconnection wiring)

1

5.12 FDEQ71, 100, 125B

The illustration below shows the switch box layout:

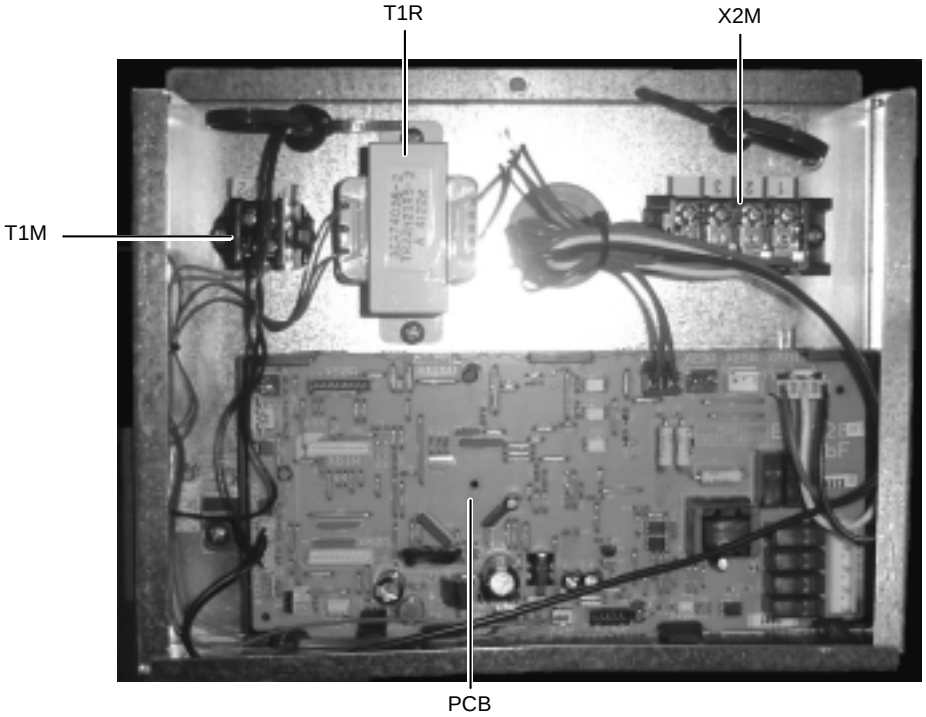

Item	Description
PCB	Printed circuit board
T1R	Transformer
X1M	Terminal strip (for remote control P1/P2)
X2M	Terminal strip (interconnection wiring)

6 PCB Layout

6.1 What Is in This Chapter?

Introduction

This chapter contains the following information:

- It describes which unit uses which PCB types
- It shows the PCB connectors

Indoor units

This chapter contains the following PCB layouts:

PCB layout	See page
6.2–FCQ35, 50, 60B	1–108
6.3–FCQ71, 100, 125B	1–109
6.4–FCQ71, 100, 125, 140D	1–110
6.5–FFQ25, 35, 50, 60B	1–112
6.6–FBQ35, 50, 60, 71B & FDEQ71B	1–113
6.7–FBQ100, 125B & FDEQ100, 125B	1–114
6.8–FDQ125, 200, 250B	1–115
6.9–FHQ35, 50, 60B	1–116
6.10–FHQ71, 100, 125B	1–117
6.11–FUQ71, 100, 125B	1–118
6.12–FAQ71B	1–119
6.13–FAQ100B	1–120

1

6.2 FCQ35, 50, 60B

PCB

The illustration below shows the PCB connectors.

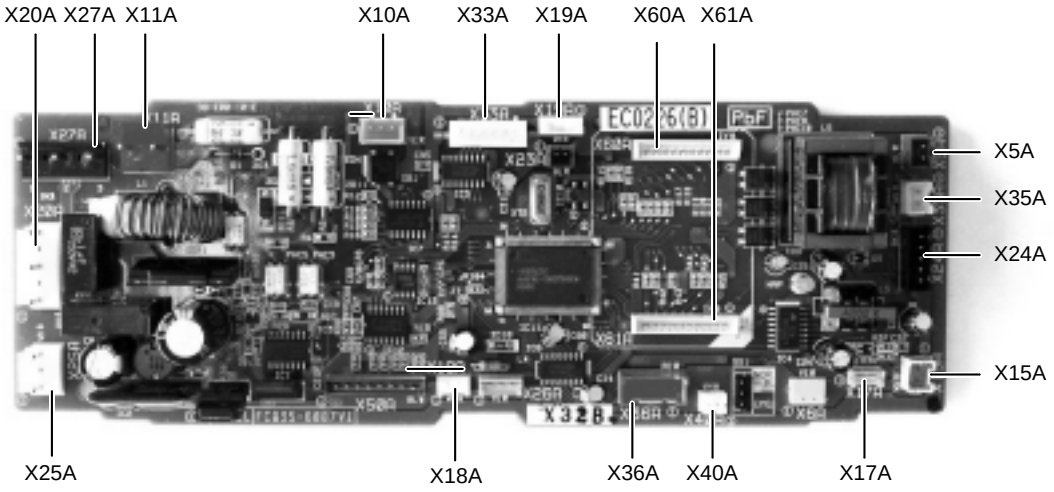

Connectors

The table below describes the PCB connectors.

Connector	Connected to	Description
X5A	X1M	Terminal strip for P1/P2
X10A	T1R	Transformer secondary side
X11A	T1R	Transformer primary side
X15A	33H	Float switch
X17A	R3T	Coil thermistor
X18A	R2T	Coil thermistor (liquid)
X19A	R1T	Air thermistor
X20A	M2F	Fan motor (power supply)
X24A	X2A on A3P	X24A is connected when the infrared remote control is used.
X25A	M3P	Drain pump motor
X27A	X2M	Power supply & communication
X33A	X1A on KRP1B	Connector for wiring adapter KRP1B
X35A	X1A on KRP4	Connector to group control adapter power supply (16VDC) for optional PCB KRP4
X36A	M1A	Swing flap motor
X40A	–	Connector for remote ON/OFF, Forced OFF
X60A	X1A on DTA112	Connector for interface adapter
X61A	X2A on DTA112	Connector for interface adapter

6.3 FCQ71, 100, 125B

PCB

The illustration below shows the PCB connectors.

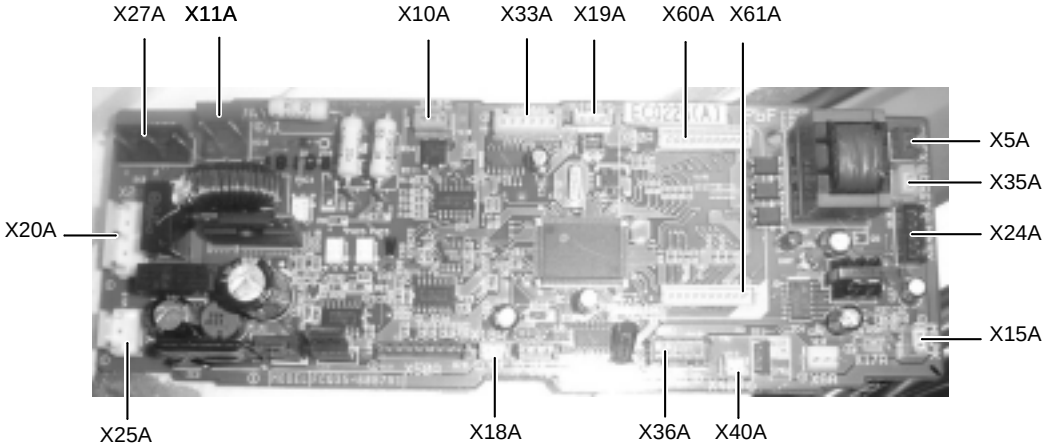

Connectors

The table below describes the PCB connectors.

Connector	Connected to	Description
X5A	X1M	Terminal strip for P1/P2
X10A	T1R	Transformer secondary side
X11A	T1R	Transformer primary side
X15A	S1L	Float switch
X18A	R2T	Coil thermistor (liquid)
X19A	R1T	Air thermistor
X20A	M2F	Fan motor (power supply)
X24A	X2A on A3P	X24A is connected when the infrared remote control is used.
X25A	M3P	Drain pump motor
X27A	X2M	Power supply & communication
X33A	X1A on KRP1B	Connector for wiring adapter KRP1B
X35A	X1A on KRP4	Connector to group control adapter power supply (16VDC) for optional PCB KRP4
X36A	M1A	Swing flap motor
X40A	–	Connector for remote ON/OFF, Forced OFF
X60A	X1A on DTA112	Connector for interface adapter
X61A	X2A on DTA112	Connector for interface adapter

1

6.4 FCQ71, 100, 125, 140D

PCB1 - Power PCB

The illustration below shows the PCB1 connectors.

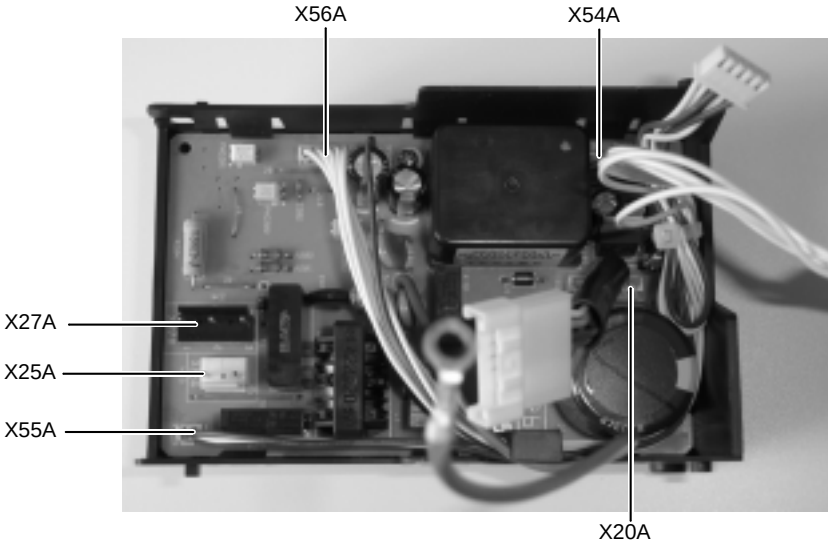

Connectors

The table below describes the PCB connectors.

Connector	Connected to	Description
X20A	M1F	Fan motor (Power supply & feedback)
X25A	M1P	Drain pump motor
X27A	X2M	Power supply & communications
X54A	X57A (on A2P)	PCB interconnection wire
X55A	X57A (on A2P)	PCB interconnection wire
X56A	X57A (on A2P)	PCB interconnection wire

PCB2 - Control PCB

The illustration below shows the PCB2 connectors.

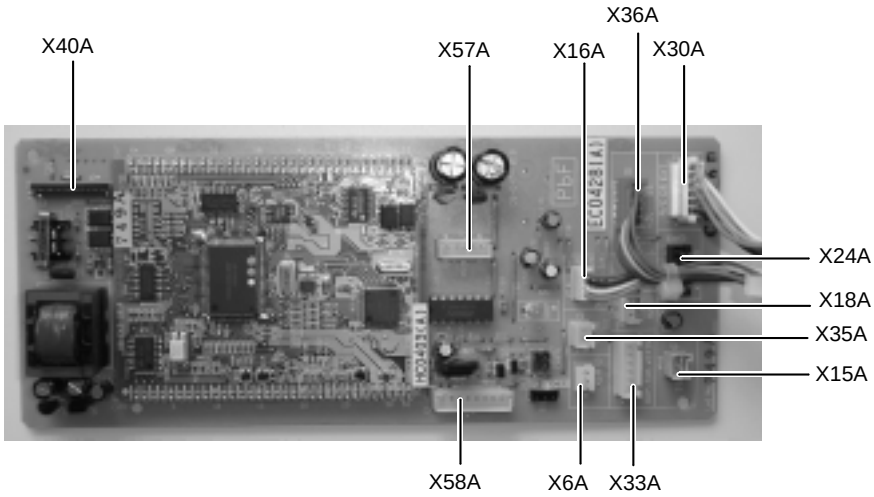

Connectors

The table below describes the PCB connectors.

Connector	Connected to	Description
X6A	_	Not used
X15A	S1L	Float switch
X16A	A3P	Humidity sensor
X18A	R2T	Coil thermistor
X24A	X2A on A4P	X24A is connected when the infrared remote control used
X30A	X1M	Terminal strip for P1/P2 and F1/F2
X33A	X1A on KRP1B	Connector for wiring adapter KRP1B
X35A	X1A on KRP4	Connector to group control adapter power supply (16VDC) for optional PCB KRP4
X36A	M1S	Swing flap motor
X40A	_	Not used
X57A	X54A/X55A (on A1P)	PCB interconnection wiring
X58A	X56A (on A1P)	PCB interconnection wiring

1

6.5 FFQ25, 35, 50, 60B

PCB

The illustration below shows the PCB connectors.

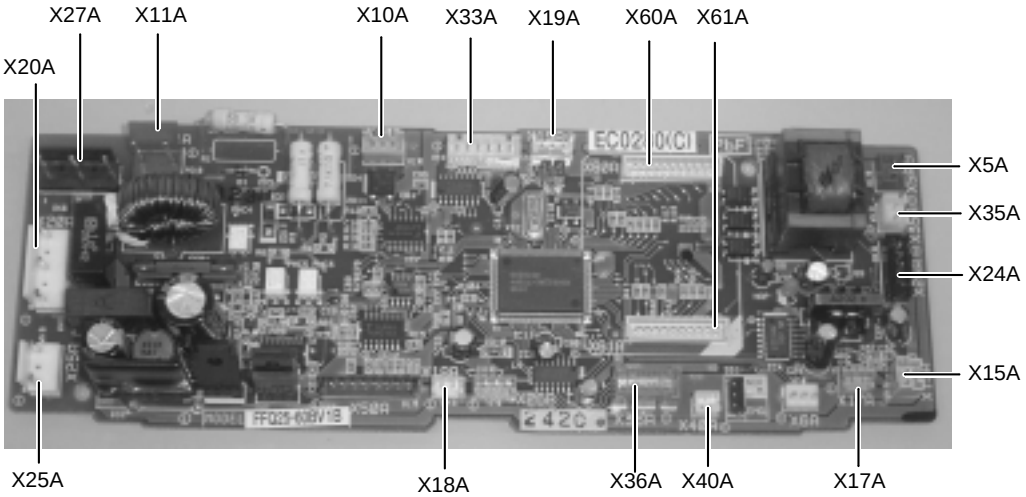

Connectors

The table below describes the PCB connectors.

Connector	Connected to	Description
X5A	X1M	Terminal strip for P1/P2
X10A	T1R	Transformer secondary side
X11A	T1R	Transformer primary side
X15A	S1L	Float switch
X17A	R3T	Coil thermistor (gas). Not used on 71~125 class.
X18A	R2T	Coil thermistor (liquid)
X19A	R1T	Air thermistor
X20A	M1F	Fan motor (power supply)
X24A	X2A on A3P	X24A is connected when the infrared remote control is used.
X25A	M1P	Drain pump motor
X27A	X2M	Power supply & communication
X33A	X1A on KRP1B	Connector for wiring adapter KRP1B
X35A	X1A on KRP4	Connector to group control adapter power supply (16VDC) for optional PCB KRP4
X36A	M1S	Swing flap motor
X40A	–	Connector for remote ON/OFF, Forced OFF
X60A	X1A on DTA112	Connection for interface adapter
X61A	X2A on DTA112	Connection for interface adapter

6.6 FBQ35, 50, 60, 71B & FDEQ71B

PCB

The illustration below shows the PCB connectors.

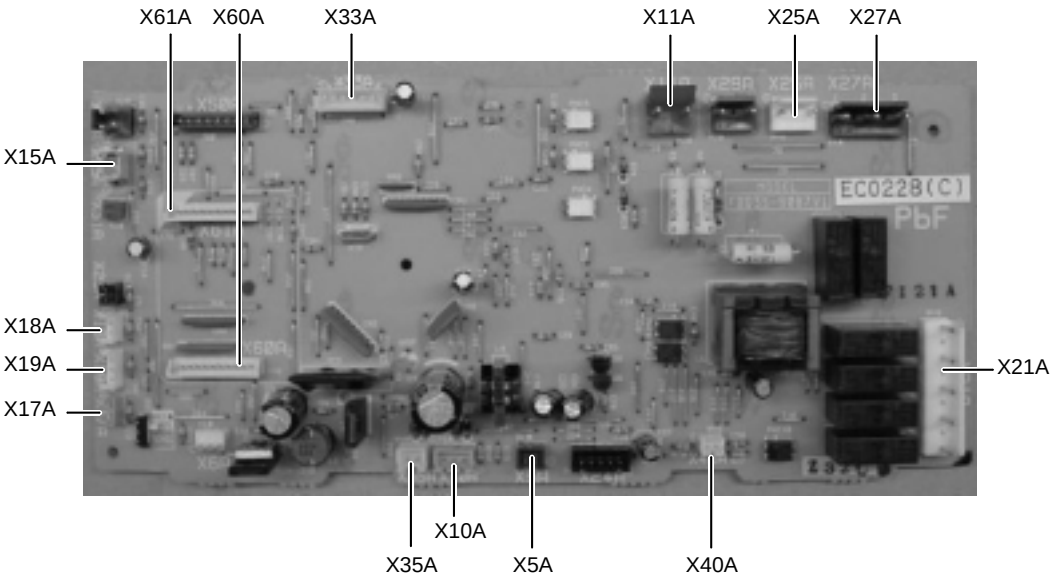

Connectors

The table below describes the PCB connectors.

Connector	Connected to	Description
X5A	X1M	Terminal strip for P1/P2
X10A	T1R	Transformer secondary side
X11A	T1R	Transformer primary side
X15A	33H	Float switch
X17A	R3T	Coil thermistor
X18A	R2T	Coil thermistor (liquid)
X19A	R1T	Air thermistor
X21A	M1F	Fan motor (power supply)
X25A	M1P	Drain pump motor
X27A	X2M	Power supply & communication
X33A	X1A on KRP1B	Connector for wiring adapter KRP1B
X35A	X1A on KRP4	Connector to group control adapter power supply (16VDC) for optional PCB KRP4
X40A	–	Connector for remote ON/OFF, Forced OFF
X60A	X1A on DTA112	Connection for interface adapter
X61A	X2A on DTA112	Connection for interface adapter

1

6.7 FBQ100, 125B & FDEQ100, 125B

PCB

The illustration below shows the PCB connectors.

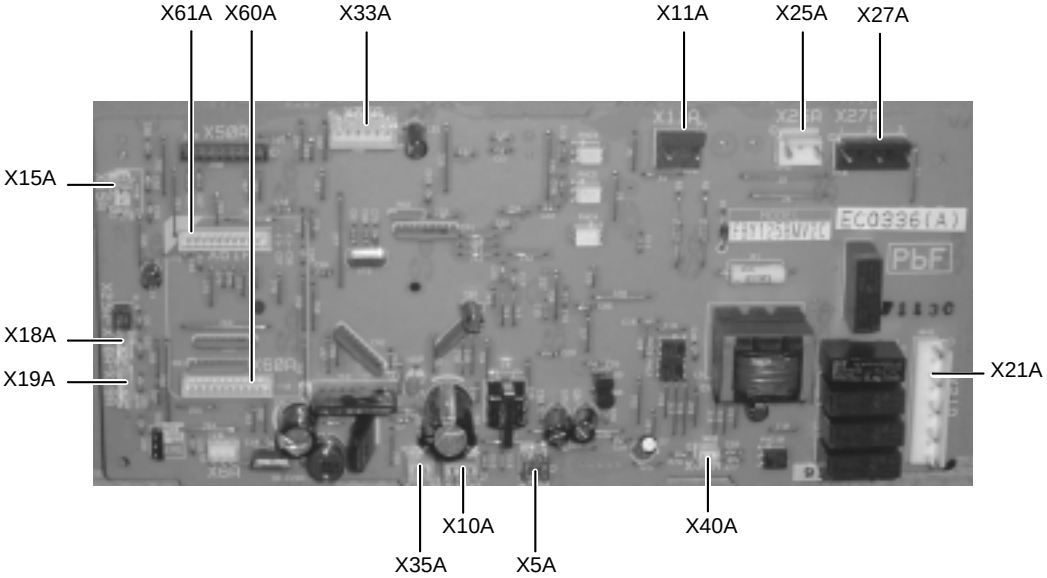

Connectors

The table below describes the PCB connectors.

Connector	Connected to	Description
X5A	X1M	Terminal strip for P1/P2
X10A	T1R	Transformer secondary side
X11A	T1R	Transformer primary side
X15A	S1L	Float switch
X18A	R2T	Coil thermistor (liquid)
X19A	R1T	Air thermistor
X21A	M1F	Fan motor (power supply)
X25A	M1P	Drain pump motor
X27A	X2M	Power supply & communication
X33A	X1A on KRP1B	Connector for wiring adapter KRP1B
X35A	X1A on KRP4	Connector to group control adapter power supply (16VDC) for optional PCB KRP4
X40A	–	Connector for remote ON/OFF, Forced OFF
X60A	X1A on DTA112	Connection for interface adapter
X61A	X2A on DTA112	Connection for interface adapter

6.8 FDQ125, 200, 250B

PCB

The illustration below shows the PCB connectors.ì

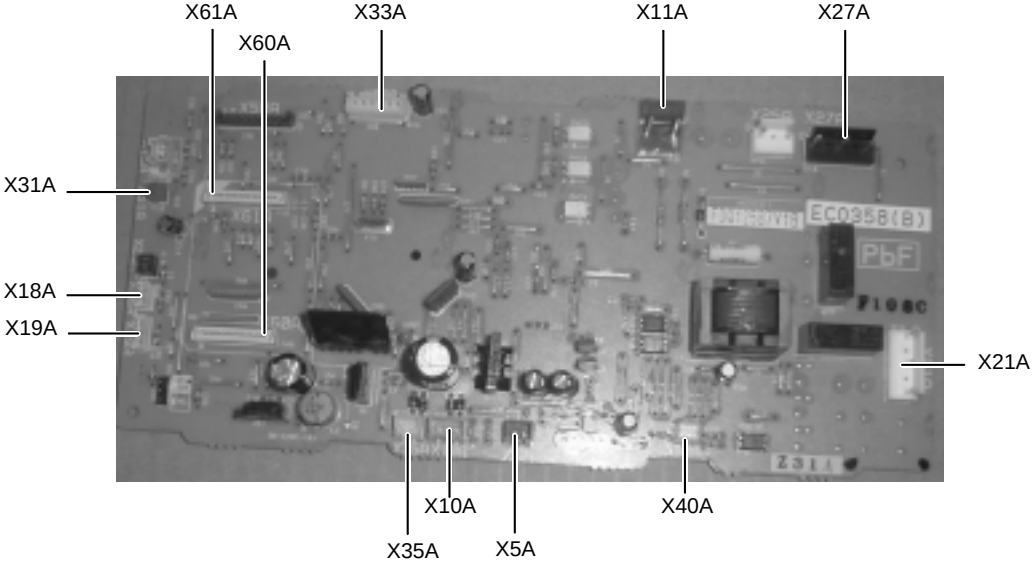

Connectors

The table below describes the PCB connectors.

Connector	Connected to	Description
X5A	X1M	Terminal strip for P1/P2
X10A	T1R	Transformer secondary side
X11A	T1R	Transformer primary side
X18A	R2T	Coil thermistor (liquid)
X19A	R1T	Air thermistor
X21A	K1F	Magnetic contactor of fan motor
X27A	X2M	Power supply & communication
X31A	A3P	PCB
X33A	X1A on KRP1B	Connector for wiring adapter KRP1B
X35A	X1A on KRP4	Connector to group control adapter power supply (16VDC) for optional PCB KRP4
X40A	–	Connector for remote ON/OFF, Forced OFF
X60A	X1A on DTA112	Connection for interface adapter
X61A	X2A on DTA112	Connection for interface adapter

1

6.9 FHQ35, 50, 60B

PCB

The illustration below shows the PCB connectors.

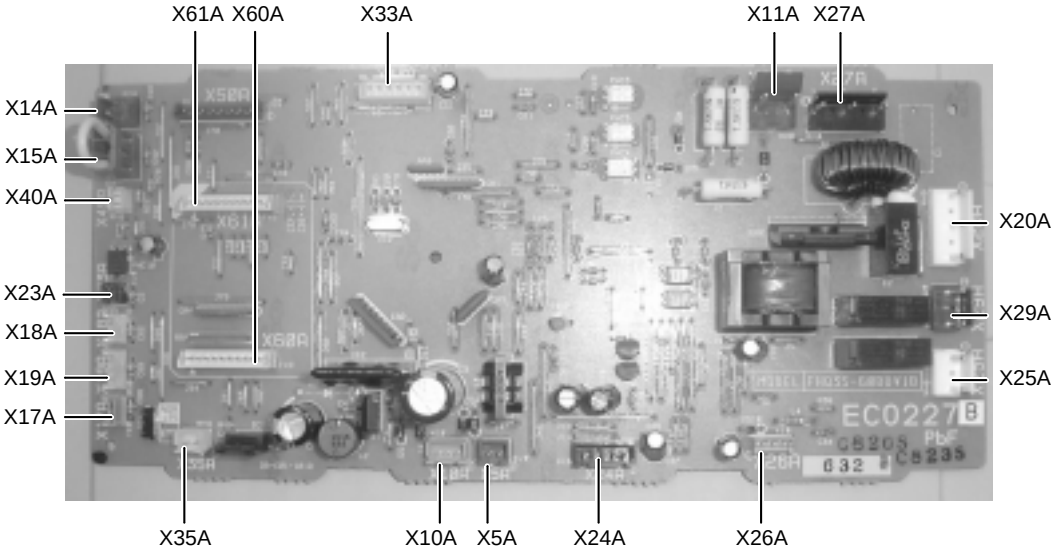

Connectors

The table below describes the PCB connectors.

Connector	Connected to	Description
X5A	X1M	Terminal strip for P1/P2
X10A	T1R	Transformer secondary side
X11A	T1R	Transformer primary side
X14A	S1Q	Limit switch (Swing flap)
X15A	–	Connector for float switch. When installing the drain pump, remove the jumper connector of X15A and carry out the additional wiring for float switch and drain pump.
X17A	R3T	Coil thermistor (gas). Not used on 71~125 class.
X18A	R2T	Coil thermistor (liquid)
X19A	R1T	Air thermistor
X20A	M1F	Fan motor (power supply)
X24A	X2A on A3P	X24A is connected when the infrared remote control is used.
X25A	–	Drain pump (option)
X26A	M1F	Fan motor (feedback signal)
X27A	X2M	Power supply & communication
X29A	M1S	Swing flap motor
X33A	X1A on KRP1B	Connector for wiring adapter KRP1B
X35A	X1A on KRP4	Connector to group control adapter power supply (16VDC) for optional PCB KRP4
X40A	–	Connector for remote ON/OFF, Forced OFF
X60A	X1A on DTA112	Connection for interface adapter
X61A	X2A on DTA112	Connection for interface adapter

6.10 FHQ71, 100, 125B

PCB

The illustration below shows the PCB connectors.

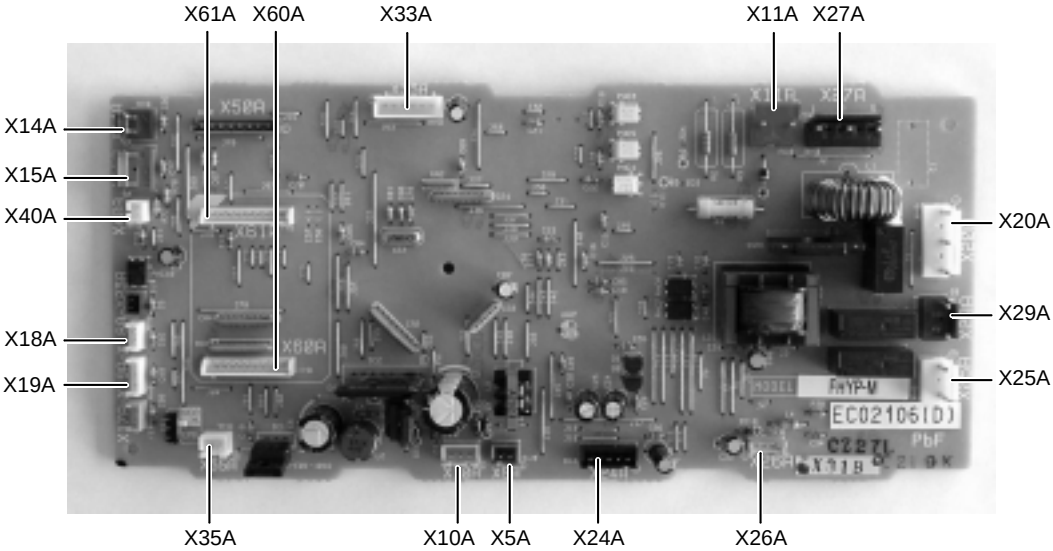

Connectors

The table below describes the PCB connectors.

Connector	Connected to	Description
X5A	X1M	Terminal strip for P1/P2
X10A	T1R	Transformer secondary side
X11A	T1R	Transformer primary side
X14A	S1Q	Limit switch (Swing flap)
X15A	–	Connector for float switch. When installing the drain pump, remove the jumper connector of X15A and carry out the additional wiring for float switch and drain pump.
X18A	R2T	Coil thermistor (liquid)
X19A	R1T	Air thermistor
X20A	M1F	Fan motor (power supply)
X24A	X2A on A2P	X24A is connected when the infrared remote control is used.
X25A	–	Drain pump (option)
X26A	M1F	Fan motor (feedback signal)
X27A	X2M	Power supply & communication
X29A	M1S	Swing flap motor
X33A	X1A on KRP1B	Connector for wiring adapter KRP1B
X35A	X1A on KRP4	Connector to group control adapter power supply (16VDC) for optional PCB KRP4
X40A	–	Connector for remote ON/OFF, Forced OFF
X60A	X1A on DTA112	Connection for interface adapter
X61A	X2A on DTA112	Connection for interface adapter

1

6.11 FUQ71, 100, 125B

PCB

The illustration below shows the PCB connectors.

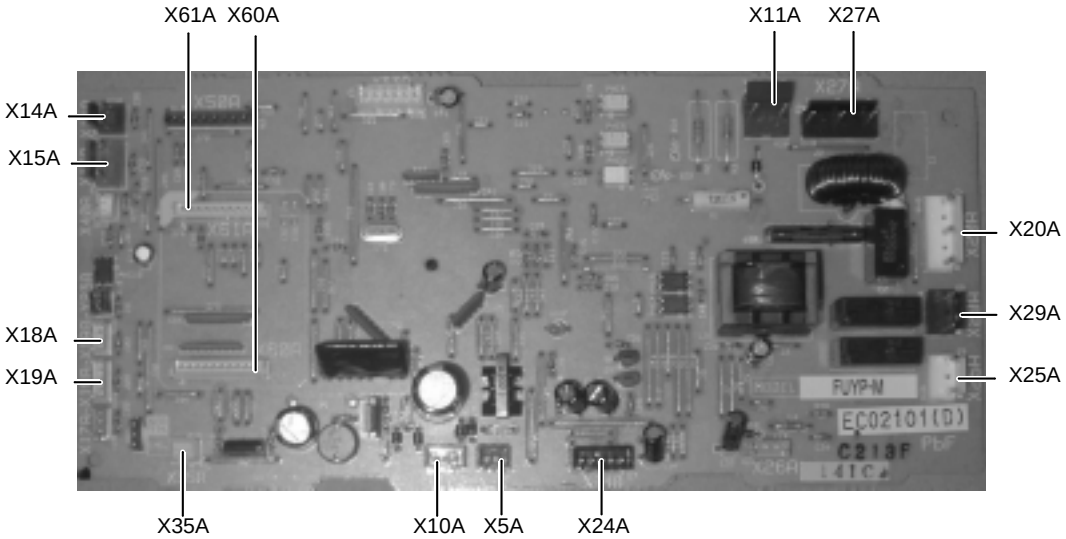

Connectors

The table below describes the PCB connectors.

Connector	Connected to	Description
X5A	X1M	Terminal strip for P1/P2
X10A	T1R	Transformer secondary side
X11A	T1R	Transformer primary side
X14A	S1Q	Limit switch swing flap
X15A	S1L	Float switch
X18A	R2T	Coil thermistor (liquid)
X19A	R1T	Air thermistor
X20A	M1F	Fan motor (power supply)
X24A	X2A on A3P	X24A is connected when the infrared remote control is used.
X25A	M1P	Drain pump motor
X27A	X2M	Power supply & communication
X29A	M1S	Swing flap motor
X35A	X1A on KRP4	Connector to group control adapter power supply (16 VDC) for optional PCB KRP4
X60A	X1A on DTA112	Connector for interface adapter
X61A	X2A on DTA112	Connector for interface adapter

6.12 FAQ71B

PCB

The illustration below shows the PCB connectors.

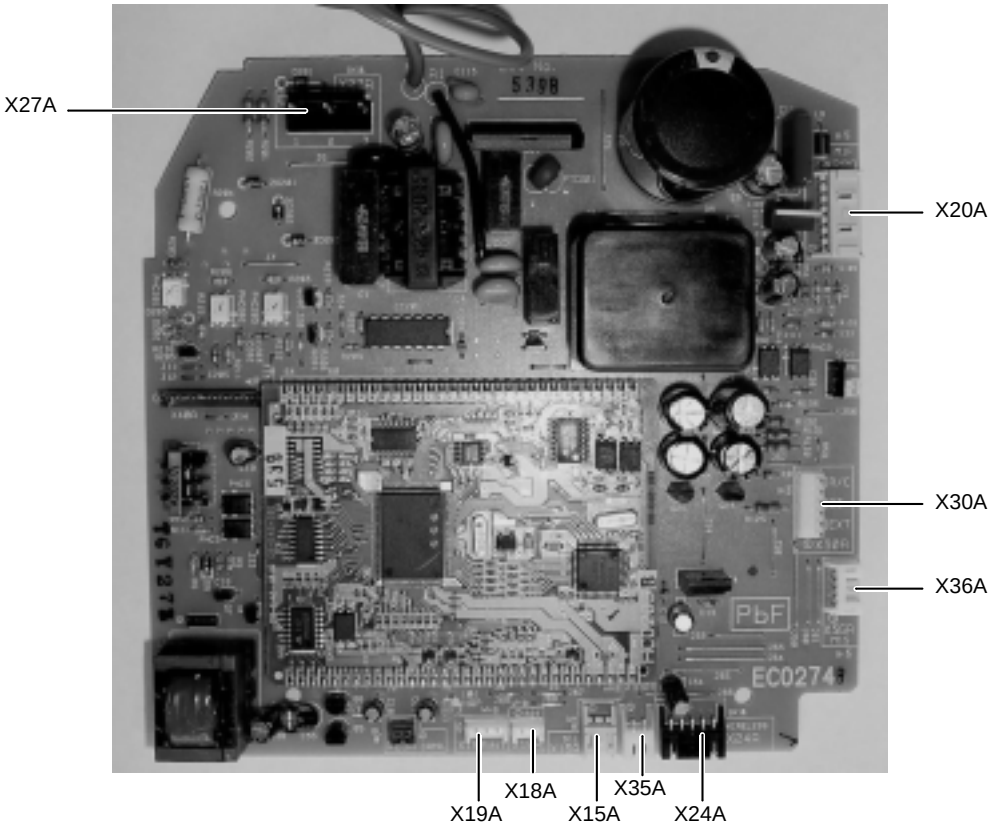

Connectors

The table below describes the PCB connectors.

Connector	Connected to	Description
X15A		Connector float switch
X18A	R2T	Coil thermistor (liquid)
X19A	R1T	Air thermistor
X20A	M1F	Fan motor (power supply)
X24A	X2A on A2P	infrared remote control connector
X27A	X2M	Power supply & communication
X30A	X1M	Terminal strip for P1/P2
X35A	X1A on KRP4	Connector to group control adapter power supply (16 VDC) for optional PCB KRP4
X36A	M1S	Swing flap motor

1

6.13 FAQ100B

PCB

The illustration below shows the PCB connectors.

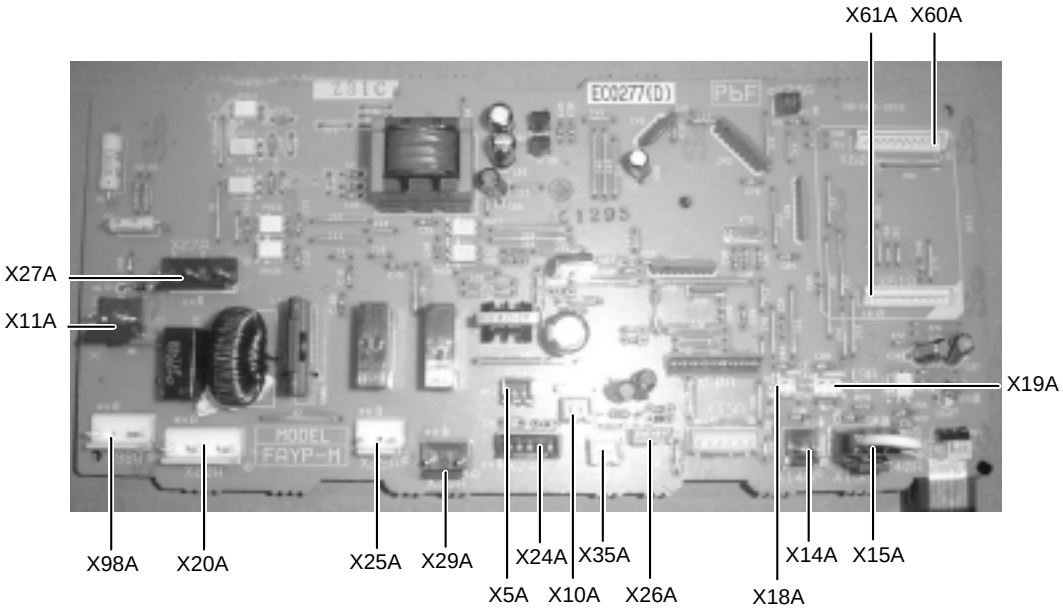

Connectors

The table below describes the PCB connectors.

Connector	Connected to	Description
X5A	X1M	Terminal strip for P1/P2
X10A	X2A on A2P	Transformer PCB (secondary side)
X11A	X1A on A2P	Transformer PCB (primary side)
X14A	S1Q	Limit switch swing flap
X15A		Connector float switch
X18A	R2T	Coil thermistor (liquid)
X19A	R1T	Air thermistor
X20A	M1F	Fan motor (power supply)
X24A	X2A on A3P	X24A is connected when the infrared remote control is used.
X25A	M1P	Drain pump motor
X26A	M1F	Fan motor(feedback signal)
X27A	X2M	Power supply & communication
X29A	M1S	Swing flap motor
X35A	X1A on KRP4	Connector to group control adapter power supply (16 VDC) for optional PCB KRP4
X60A	X1A on DTA112	Connector for interface adapter
X61A	X2A on DTA112	Connector for interface adapter
X98A	C1	Capacitor for fan motor

Part 2
Functional Description

What is in this part?

This part contains information on the functions used to control the system. Understanding these functions is vital when diagnosing a malfunction that is related to the functional control.

Overview

This part contains the following chapters:

Chapter	See page
1–Functional concept	2–3

1 Functional concept

1.1 What Is in This Chapter?

Introduction

This chapter will explain more details about the various functions that are programmed for the Sky - Air R410A indoor units.

Overview

This chapter contains the following topics:

Topic	See page
1.2–Functions of Thermistors	2–4
1.3–Forced Operating Mode (Emergency Operation)	2–5
1.4–Outdoor Unit Identification Function	2–7
1.5–Simulated Operation Function	2–8
1.6–Restart Standby	2–9
1.7–Automatic Restart	2–10
1.8–Using Conditions for remote control Thermostat	2–11
1.9–Forced Thermostat OFF	2–13
1.10–Freeze Prevention Function	2–14
1.11–PMV Control	2–15
1.12–Thermostat Control	2–16
1.13–Drain Pump Control	2–17
1.14–Condensation Avoidance Control	2–19
1.15–Draft Avoidance Control 1	2–20
1.16–Draft Avoidance Control 2	2–21
1.17–Fan and Flap Operations	2–22
1.18–Indoor Unit Fan Control	2–23

1.2 Functions of Thermistors

Locating the thermistors

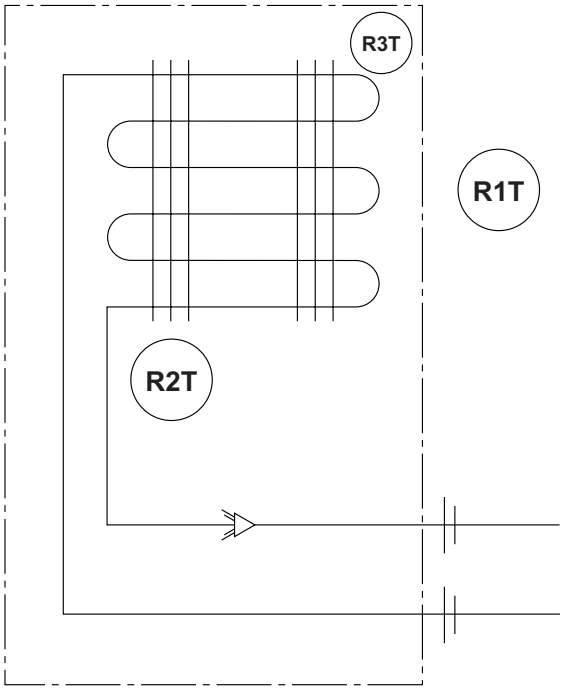

Remark

Sensor R3T on indoor coil of FCQ35~60B7V1, FFQ35~60BV1, FBQ35~60B7V1 & FHQ35~60BUV1 is not used when the indoor units are connected to sky-air outdoor units (RR, RQ, RZQ).

Functions of the thermistors

Ther-mistor	Location	Wiring symbol	Mode	Function
1	Indoor air return	R1T	Cooling	■ Thermostat control ■ PMV control ■ General frequency control
			Heating	■ Thermostat control ■ PMV control ■ General frequency control
2	Indoor heat exchanger	R2T	Cooling	■ Compressor frequency control (target Te) ■ Inverter current protection control ■ Freeze-up control
			Heating	■ Compressor frequency control (target Tc) ■ Inverter current protection control ■ Hot start control ■ Peak cut-off
3	Indoor heat exchanger	R3T	Heating	■ Peak cut-off

1.3 Forced Operating Mode (Emergency Operation)

Purpose

The table below describes the purpose of the forced operating mode.

If...	Then...
■ R/C is defective ■ Indoor PCB is defective ■ Outdoor PCB is defective	Forced operating mode can be used to go to cooling or heating. In forced operating mode, the compressor is forced to operate until the defective indoor or outdoor PCB is back online.

Starting conditions

You can operate the system manually by changing the emergency switch on the indoor and outdoor PCB from "normal" to "emergency". When the system is operating in "emergency" it can not control the room temperature.

Both the indoor and outdoor unit must be set to "emergency" while the power is off.

Ending conditions

You can end the emergency operation by changing the "emergency" switch back to "normal" while the power is OFF.

Emergency operation

Below table explains what will happen when the switch is set to "emergency":

Changing the switch to "emergency" for the…	Switches ON the…
Indoor unit	■ Indoor fan(s) ■ Drain pump
Outdoor unit	■ Compressor ■ Outdoor fan(s)

How to set Emergency Operation

To set emergency operation, proceed as follows:

Step	Action
1	Turn OFF the power.
2	Switch ON the emergency switch (SS1) on the indoor PCB. 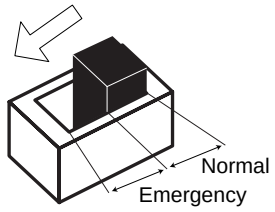

2

Step	Action
3	Switch ON the emergency switch on the outdoor PCB. 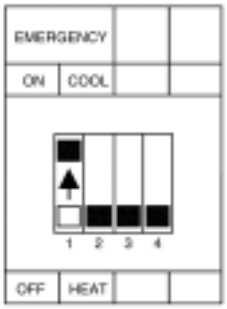
4	Set the emergency switch on the outdoor PCB to the forced mode you prefer (Cooling or Heating). 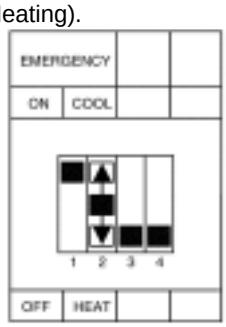
5	Turn ON the power supply.

Active components

Component	Forced cooling	Forced heating	Forced defrosting
Compressor	ON	ON	ON
4-way valve	OFF	ON	OFF
Outdoor unit fan	H fan speed	H fan speed	OFF
Indoor unit fan	H fan speed	H fan speed	H fan speed
Drain pump	ON	OFF	ON

Additional info

- During emergency operation, do not attempt to operate the equipment from the remote control. The remote control shows "88" while the emergency operation is active on the indoor unit
- If a safety device is activated during emergency, all actuators are turned OFF
- In cooling, the unit runs for 20 min and then stops for 10 min in order to avoid freeze-up of the indoor coil.
- In heating, defrost is activated for 3 minutes once every hour.
- Emergency operation can not be carried out when the PCB board itself is defective.
- Be sure to set the emergency switch on both the outdoor and indoor unit.
- The unit will not regulate the temperature during emergency operation.
- Change the position of the emergency switch only when the power is turned off.

1.4 Outdoor Unit Identification Function

Purpose

The purpose of the outdoor unit identification function is to enable the indoor unit to automatically determine which operating mode has to be set in function of the type of connected outdoor unit (c/o or h/p).

Operating modes

The possible operating modes are:

Outdoor unit	Operating modes
h/p	■ Fan ■ Cooling ■ Dry keep ■ Heating
c/o	■ Fan ■ Cooling ■ Dry keep

Used input

The outdoor unit identification function uses the following inputs:

Input	Connection on indoor PCB	Connection on outdoor PCB
Indoor PCB	TC & RC	—
Outdoor PCB	—	TC & RC

TC: Transmission circuit
RC: Receiving circuit

1.5 Simulated Operation Function

Outline

When a malfunction on one of the below thermistors occurs, operation will continue while displaying the applicable alarm on the remote-controller. Fin thermistor malfunction is only displayed when pressing the "Inspection" button on the remote-controller.

2

Sensors

- Outside temperature thermistor
- Outdoor heat exchanger thermistor
- Fin thermistor
- Discharge pipe thermistor
- Indoor unit air suction thermistor
- Indoor heat exchanger thermistor

Remark

Simulated operation will not be conducted in case the low pressure sensor or suction thermistor is malfunctioning.

1.6 Restart Standby

Outline

To prevent the compressor from frequently turning ON and OFF and allow pressure equalization, forced thermostat OFF will be conducted for 3 minutes after compressor stopping (compressor guard timer).

Graph

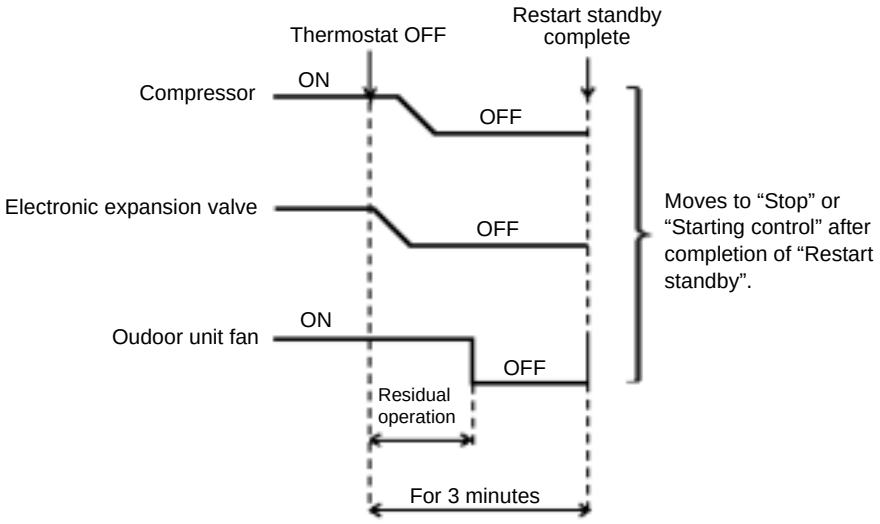

1.7 Automatic Restart

Purpose

The purpose of the auto-restart function is to automatically resume the same operating mode as when the unit was operating when the power supply is restored after a power failure.

Do not use the "Automatic Restart" function to daily start/stop the unit.

2

Precautions when turning OFF power

- When you have to turn OFF the power supply in order to carry out maintenance, make sure to turn the remote control's ON/OFF switch OFF firstly.
- If you turn OFF the power supply while the remote control's ON/OFF switch is still ON, the "automatic restart function" automatically starts the indoor fan immediately and the outdoor unit fan starts automatically 3 minutes after the power supply is turned back ON.
- Do not start/stop the unit by disconnecting the power supply.Stop the unit by stop commando from the remote control or optional controller before disconnecting the power supply. Be sure that the compressor and the outdoor fans are stopped before disconnecting the power supply so the "Refrigerant Recovery function" has been finished correctly.
- When restarting the unit after the power was disconnected for a longer period leave the unit OFF with the power supply connected for about half an hour.

1.8 Using Conditions for remote control Thermostat

Applicable

The remote control thermostat is only available in wired remote controls.

Method

Unlike with VRV units, the remote control sensor is standard disabled for sky-air units. The use of the remote control sensor can be enabled by changing field setting 10(20)-2-02 to 10(20)-2-01.

2

Conditions

The table below contains the condition in which the remote control thermostat is not used:

Condition	The remote control thermostat is not used when...
1	The remote control thermostat malfunctions.
2	Group control is used.
3	The set temperature / air suction temperature combination is out of range. (See below graph)

Cooling

The diagram below shows the operation range of the set temperature / air suction temperature combination in cooling operation:

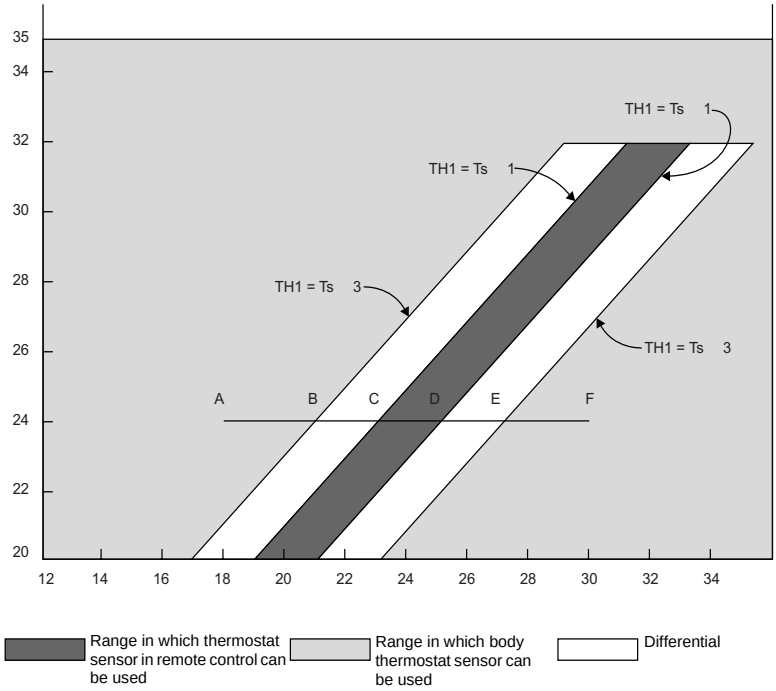

Example: Assuming the preset temperature above is 24°C, and the suction temperature has changed from 18°C to 30°C (A --> F):
(This example also assumes there are several other air conditioners, the VRV system is off, and that temperature changes even when the thermostat sensor is off.)
Body thermostat sensor is used for temperatures from 18°C to 23°C (A --> C).
remote control thermostat sensor is used for temperatures from 23°C to 27°C (C --> E).
Body thermostat sensor is used for temperatures from 27°C to 30°C (E --> F).

And assuming suction temperature has changed from 30°C to 18°C (F --> A):
Body thermostat sensor is used for temperatures from 30°C to 25°C (F --> D).
remote control thermostat sensor is used for temperatures from 25°C to 21°C (D --> B).
Body thermostat sensor is used for temperatures from 21°C to 18°C (B --> A).

Heating

The diagram below shows the operation range of the set temperature / air suction temperature combination in heating operation:

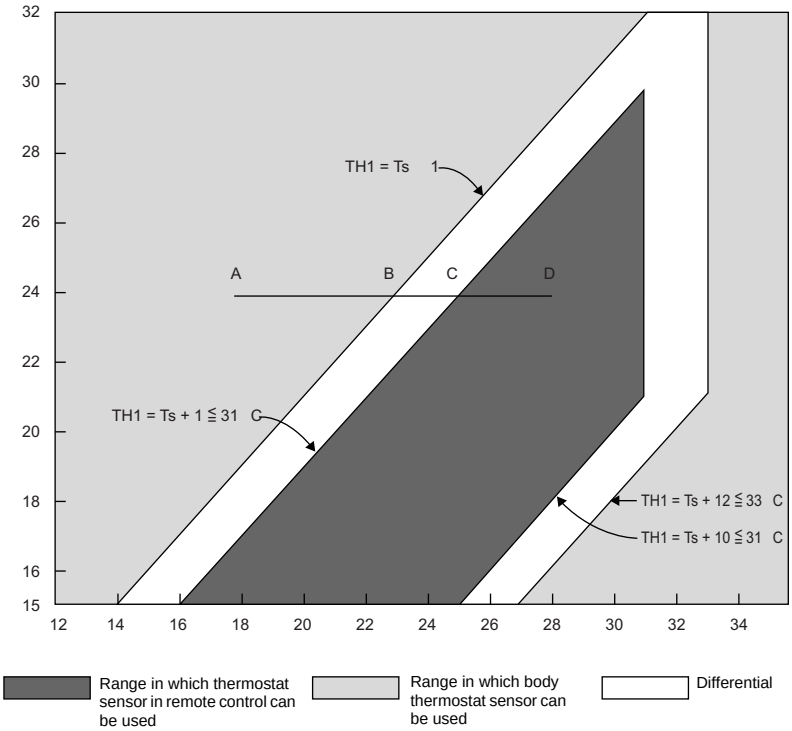

Example: Assuming the preset temperature above is 24°C, and the suction temperature has changed from 18°C to 28°C (A --> F):
(This example also assumes there are several other air conditioners, the VRV system is off, and that temperature changes even when the thermostat sensor is off.)
Body thermostat sensor is used for temperatures from 18°C to 25°C (A --> C).
remote control thermostat sensor is used for temperatures from 25°C to 28°C (C --> E).

And assuming suction temperature has changed from 28°C to 18°C (D --> A):
remote control thermostat sensor is used for temperatures from 28°C to 23°C (D --> B).
Body thermostat sensor is used for temperatures from 23°C to 18°C (B --> A).

1.9 Forced Thermostat OFF

Outline

The unit will perform the forced thermostat off function in following conditions:

Condition 1 (cooling)

Thermostat off due to freeze-up prevention.

Prevent the indoor unit heat exchanger from freezing in cooling operation when one of the below conditions is applicable:

- Indoor unit heat exchanger temperature < -5°C for 1 minute continuously.
- Indoor unit heat exchanger temperature < -1°C for 40 minutes accumulated.

Condition 2 (heating)

Thermostat off due to high outdoor temperature.

When the outside temperature is > 30°CDB in heating mode, the unit will conduct a forced thermostat off operation to protect the system.

Reference

"Freeze Prevention Function". Refer to page 2-14.

1.10 Freeze Prevention Function

Purpose

In order to avoid formation of ice on the indoor unit heat exchanger in cooling and dry mode, the system automatically starts up a freeze prevention cycle when a number of specific conditions are fulfilled.

2

Freeze Prevention start conditions

Freeze prevention start decided by the indoor unit (factory setting):

- Indoor coil temperature ≤ -1°C for 40 minutes accumulated

OR

- Indoor coil temperature < A°C for 1 minute continuous
- & Compressor is running for minimum 8 minutes since operation start or end of previous freeze up cycle.

Freeze Prevention stop conditions

Freeze prevention stop decided by the indoor unit (factory setting):

- Indoor coil temperature > 7°C for 10 minutes continuous

Parameters

	FAQ	FHQ	All except FAQ & FHQ
A	-1°C	-3°C	-5°C

1.11 PMV Control

Applicable units

All inverter R410A sky-air

Outline

When the automatic mode is selected on the remote-controller, the unit will automatically activate the PMV control.

The PMV index is a calculated average comfort level.

Refer to ISO 7730 for details.

Function

An optimized indoor temperature will be calculated using the following inputs:

- Outdoor air temperature
- Indoor air temperature
- remote control set temperature

In practice, the set point will be moved with 1 or 2 degrees whenever the conditions change. This will result in a combination of power saving and increased comfort level.

PMV control can be disabled by changing the field settings:
From: 11(21)-4-01 to: 11(21)-4-02

1.12 Thermostat Control

Purpose

Based on the information received from the air return sensor, the thermostat control will decide the required operation status of the system.

Thermostat control

Cooling mode:

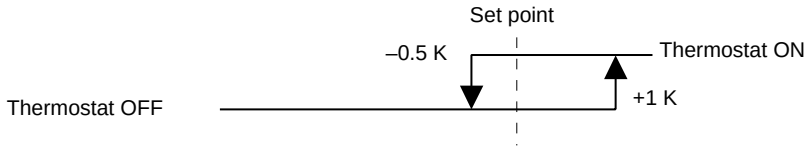

Heating mode:

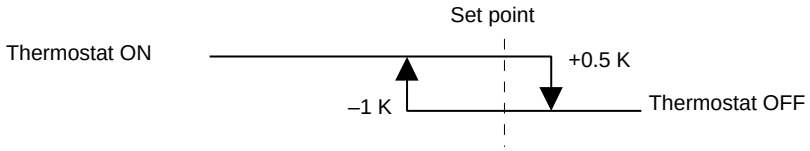

Cool / heat changeover in automatic mode:

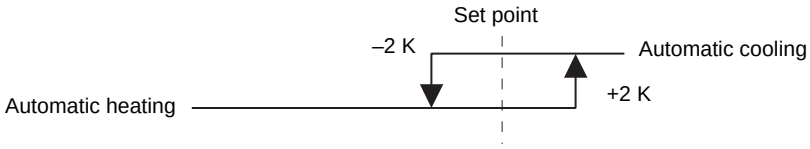

Preventing thermostat OFF conditions

The thermostat control prevents the thermostat from turning OFF in the following conditions:

- For the 2.5 minutes after operations starts, or
- Defrosting, or
- Forced operating mode, or
- Within the first 6 hours after power ON, initial operation for the first 10 minutes (See note)

Note: To protect the compressor, make sure to turn on the power supply 6 hours before starting operation.

1.13 Drain Pump Control

Purpose

Control the water draining from the drain pan.

Starting conditions

The drain pump control starts the drain pump motor when one of the following conditions is fulfilled:

- Cooling operation is activated
- Abnormal high water level is detected in the drain pan

Normal control

In normal control, the drain pump is turned ON at compressor starting and turned OFF 5 minutes after the compressor has stopped (residual operation).

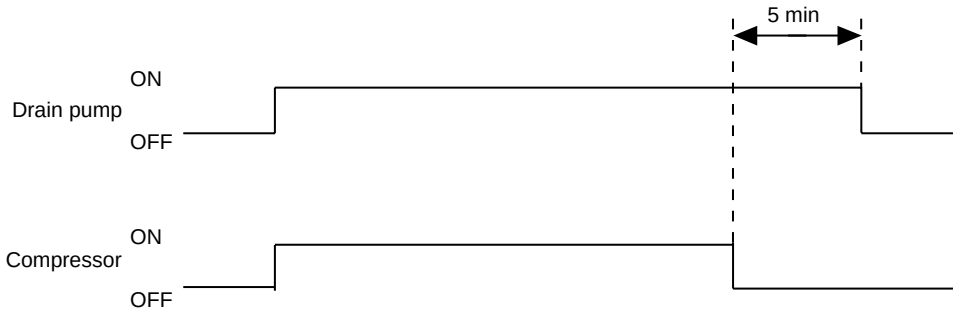

Float switch activation during thermostat OFF

When an abnormal drain level is detected in the drain pan, the float switch opens:

1. The thermostat stays forced OFF.
2. The drain pump starts to operate for minimum 10 minutes (even if abnormality is solved within the 10 minutes).
3. If the float switch closes again within 80 seconds, cooling operation can restart within the 10 minutes recovery period.

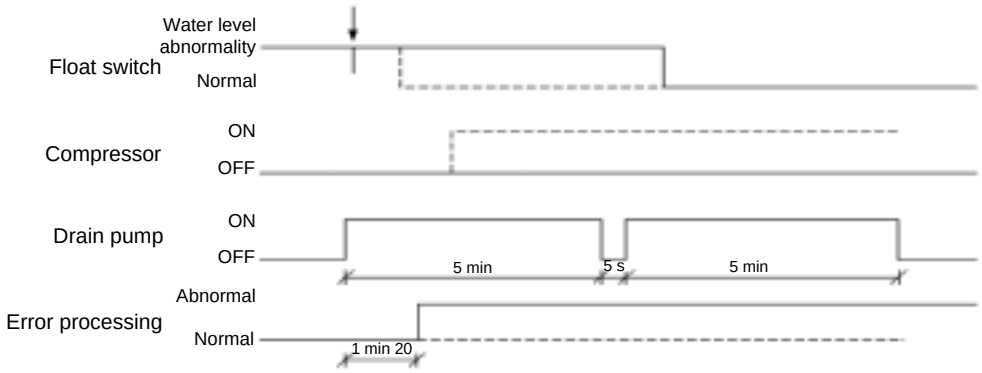

2

Float switch activation during thermostat ON

1 The thermostat is immediately turned OFF.

2 The drain pump continues to operate for minimum 10 minutes (even if abnormality is solved within the 10 minutes).

3 If the float switch closes again within 80 seconds, cooling operation can restart within the 10 minutes recovery period.

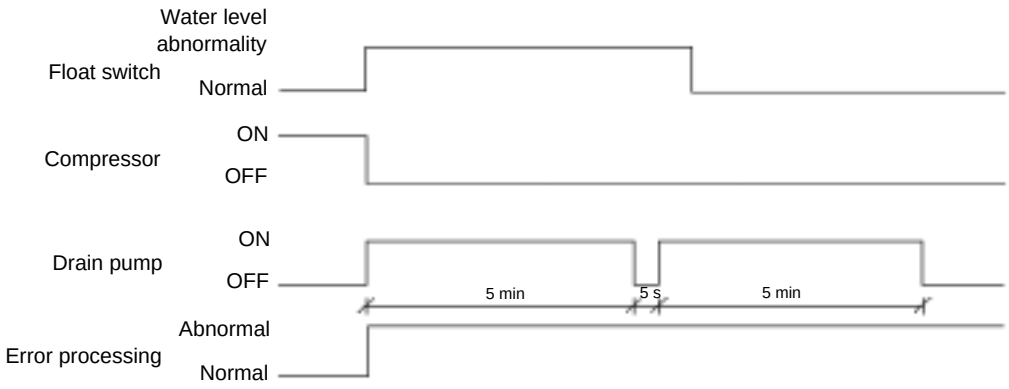

Used inputs

Input	Connection on indoor PCB	Connection on outdoor PCB
Float switch (33H)	X15A	—

1.14 Condensation Avoidance Control

Purpose

Avoid condensation on the swing flap when the most downward position of the swing flap (position 4) is selected on the remote control.

Applicable units

This function is applicable for the FHQ units only.

Method

The condensation avoidance control will function in the following operating modes:

- Cooling (automatic)
- Dry keep.

Method

To avoid condensation on the swing flap, the condensation avoidance control is activated:

Stage	Description
1	The fan operates in cooling mode with the blade in downward position (set on the remote control). 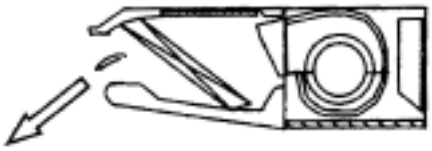
2	After 30 min, the blade moves to a horizontal position.
3	After 1 h operation in horizontal position, the blade moves back to its downward position for 30 min. 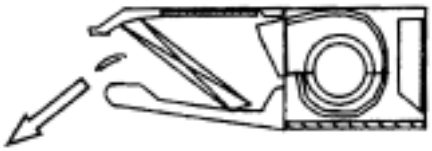
4	The unit operation is reset by: ■ Changing the operating mode into “heating” or “fan” ■ Changing the air flow direction ■ Turning the unit operation OFF and ON.

1.15 Draft Avoidance Control 1

Purpose

Avoid draft for the customer by delaying transfer of the flap to the Po0 (horizontal) position for a certain amount of time when defrosting and in heating thermostat OFF.

Heating thermostat OFF

The time chart below illustrates the draft avoidance control 1 in heating thermostat OFF.

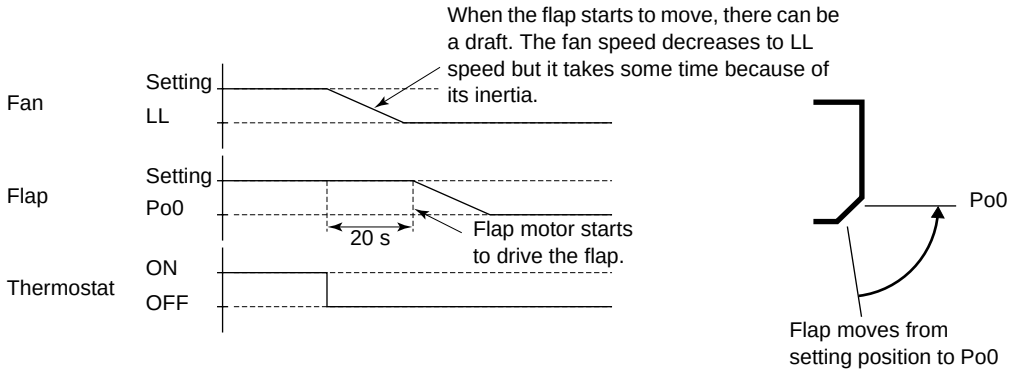

Defrosting

The time chart below illustrates the draft avoidance control 1 in defrosting.

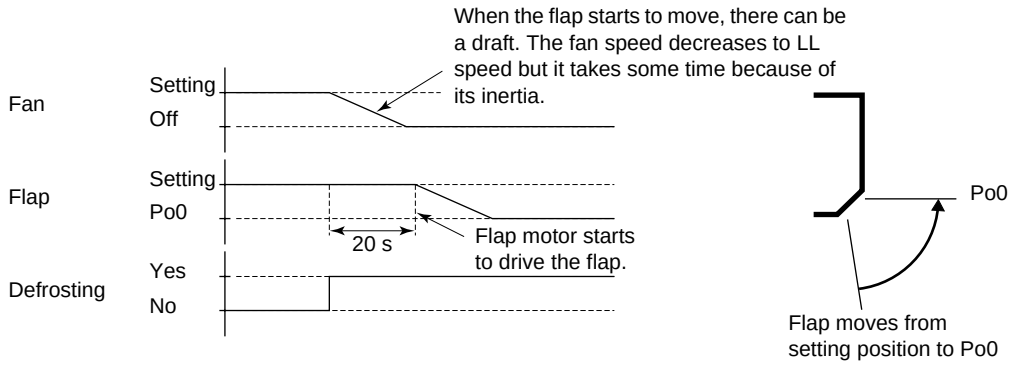

Used inputs

The draft avoidance control 1 uses the following inputs:

Input	Connection on indoor PCB	Connection on outdoor PCB
Limit switch for flap	33S	—
No. of fan turns	X26A	—
Outdoor heat exchanger thermistor (defrost control)	—	R2T

1.16 Draft Avoidance Control 2

Purpose

The purpose of the draft avoidance control 2 is to avoid draft when the flap is moving.

Starting conditions

The draft avoidance control 2 is activated when:

- Hot start is finished, or
- Cold air prevention control is finished.

Time chart

If the fan speed is set to "H", the fan turns at low speed for a certain amount of time.

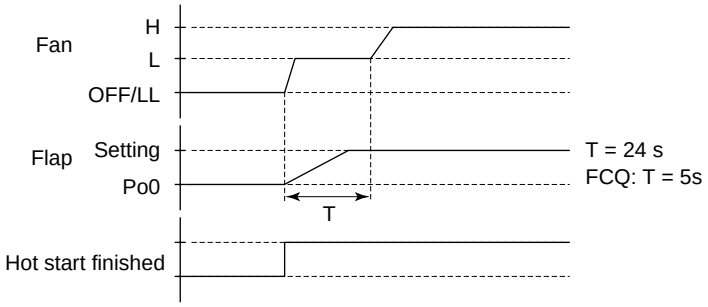

Used input

Draft avoidance control 2 uses the following inputs:

Input	Connection on indoor PCB	Connection on outdoor PCB
Limit switch for flap	33S	—
No. of fan turns	X26A	—

1.17 Fan and Flap Operations

Cooling operation The table below contains the fan and flap operations.

Function	In…	Fan	Flap (FCQ and FHQ)	Flap (FAQ)	Remote control indication
Thermostat ON in Dry Keep Mode	Swing operation	L	Swing	Swing	Swing
	Airflow direction setting		Set position	Set position	Set position
Thermostat OFF in Dry Keep Mode	Swing operation	OFF	Horizontal	Horizontal	Swing
	Airflow direction setting		Set position	Set position	Set position
Thermostat OFF in Cooling Mode	Swing operation	Set	Horizontal	Horizontal	Swing
	Airflow direction setting		Set position	Set position	Set position
Stop (Error)	Swing operation	OFF	Horizontal	Downward	---
	Airflow direction setting		Set position	Downward	
Freeze-prevention	Swing operation	OFF(*)	Horizontal	Horizontal	Swing
	Airflow direction setting		Set position	Set position	Set position

(*) LL operation on cassette type units

Heating operation The table below contains the fan and flap operations.

Function	In…	Fan	Flap (FCQ and FHQ)	Flap (FAQ)	Remote control indication
Hot start after defrost	Swing operation	OFF	Horizontal	Horizontal	Swing
	Airflow direction setting				Set position
Defrost	Swing operation				Swing
	Airflow direction setting				Set position
Thermostat OFF	Swing operation	LL			Swing
	Airflow direction setting				Set position
Hot start after thermostat OFF (cold air prevention)	Swing operation				Swing
	Airflow direction setting				Set position
Stop (error)	Swing operation	OFF		Fully closed (horizontal)	---
	Airflow direction setting			Fully closed	
Overload thermostat OFF	Swing operation	LL		Horizontal	Swing
	Airflow direction setting				Set position

1.18 Indoor Unit Fan Control

Outline

During compressor start and stop control, the indoor fan will receive instruction from the outdoor unit in order to protect the compressor from receiving liquid and to assure a smooth compressor start up:

- Indoor fan control before compressor stop
- Indoor fan control during compressor stop
- Indoor fan control before compressor startup
- Indoor fan control at compressor startup

Before compressor stop

After thermostat off or remote-controller signal off has been sent from the outdoor unit to the indoor unit, the compressor will keep on running for a period of time in order to execute the "residual pump down operation". During this pump down operation, the indoor fan will keep on operating.

Purpose:

- Cooling: Minimize the remaining refrigerant amount in indoor unit heat exchanger
- Heating: Lower the high pressure by avoiding high temperature build up around the indoor unit heat exchanger.

		Indoor fan tap
Indoor cooling / Automatic cooling	Thermostat OFF	L
	remote control OFF	LL
Indoor heating / Automatic heating	Thermostat OFF	LL
	remote control OFF	LL
Indoor drying	Thermostat OFF	LL
	Remote conntrolle OFF	LL

During compressor stop

		Indoor fan tap
Indoor cooling / Automatic cooling	Thermostat OFF	remote control setting
	remote control OFF	OFF
Indoor heating / Automatic heating	Thermostat OFF	LL
	remote control OFF	OFF
Indoor drying	Thermostat OFF	OFF
	remote control OFF	OFF

Before compressor startup

	Indoor fan tap
Indoor cooling / Automatic cooling	remote control setting
Indoor heating / Automatic heating	OFF
Indoor drying	L

2

At compressor startup

- In cooling: The indoor fan is operated at low speed until the low-pressure value reaches 6 bar.
- In heating: Hot startup controlWhen performing a startup, or after the defrosting cycle has been completed, the indoor fan will be controlled as to prevent cold air draft and secure the starting performance (quick pressure build-up).

Indoor unit fan: OFF

↓ Heating operation is turend on with remote control.

Indoor unit fan: LL tap

↓ Condition A is met.

Indoor unit fan: L tap

↓ Condition B is met.

Indoor unit fan: M tap (Continuing L tap on indoor unit without M tap equipped)

↓ Condition C is met.

Indoor unit fan: Set fan speed

	Condition A	Condition B	Condition C
Indoor unit h/e temp > 34°C	O	O	O
Indoor unit h/e temp > indoor suction air temp +17°C (+12°C if outside temperature is < 5°C)	O	O	---
Indoor unit h/e temp > indoor suction air temp +22°C (+20°C if outside temperature is < 5°C)	---	---	O
3 minutes elapsed after compressor startup	O	---	---
5.5 minutes elapsed after compressor startup	---	O	---
10.5 minutes elapsed after compressor startup	---	---	O

Part 3
Troubleshooting

What is in this part? This part contains the following chapters:

Chapter	See page
1–Troubleshooting	3–3
2–Error Codes	3–31
1–Error Codes: System Malfunctions	3–3
4–Additional Checks for Troubleshooting	3–53

1 Troubleshooting

1.1 What Is in This Chapter?

Introduction

When a problem occurs, you have to check all possible malfunctions. This chapter gives a general idea of where to look for malfunctions.

Not all repair procedures are described. Some procedures are considered common practice.

Overview

This chapter contains the following topics:

Topic	See page
1.2–General Troubleshooting Flowchart	3–4
1.3–Overview of General Problems	3–5
1.4–Procedure of Self-Diagnosis by remote control	3–20
1.5–Fault-diagnosis by Wired remote control	3–21
1.6–Fault-diagnosis by infrared remote control	3–22
1.7–Overview of Error Codes	3–26
1.8–Troubleshooting by LED Indications on the Indoor Unit	3–27
1.9–Troubleshooting by remote control Display / LED Display	3–28
1.10–Overview of the Indoor Safety Devices	3–30

1.2 General Troubleshooting Flowchart

Find out the situation according to the following procedure when there is a request for service from the customer.

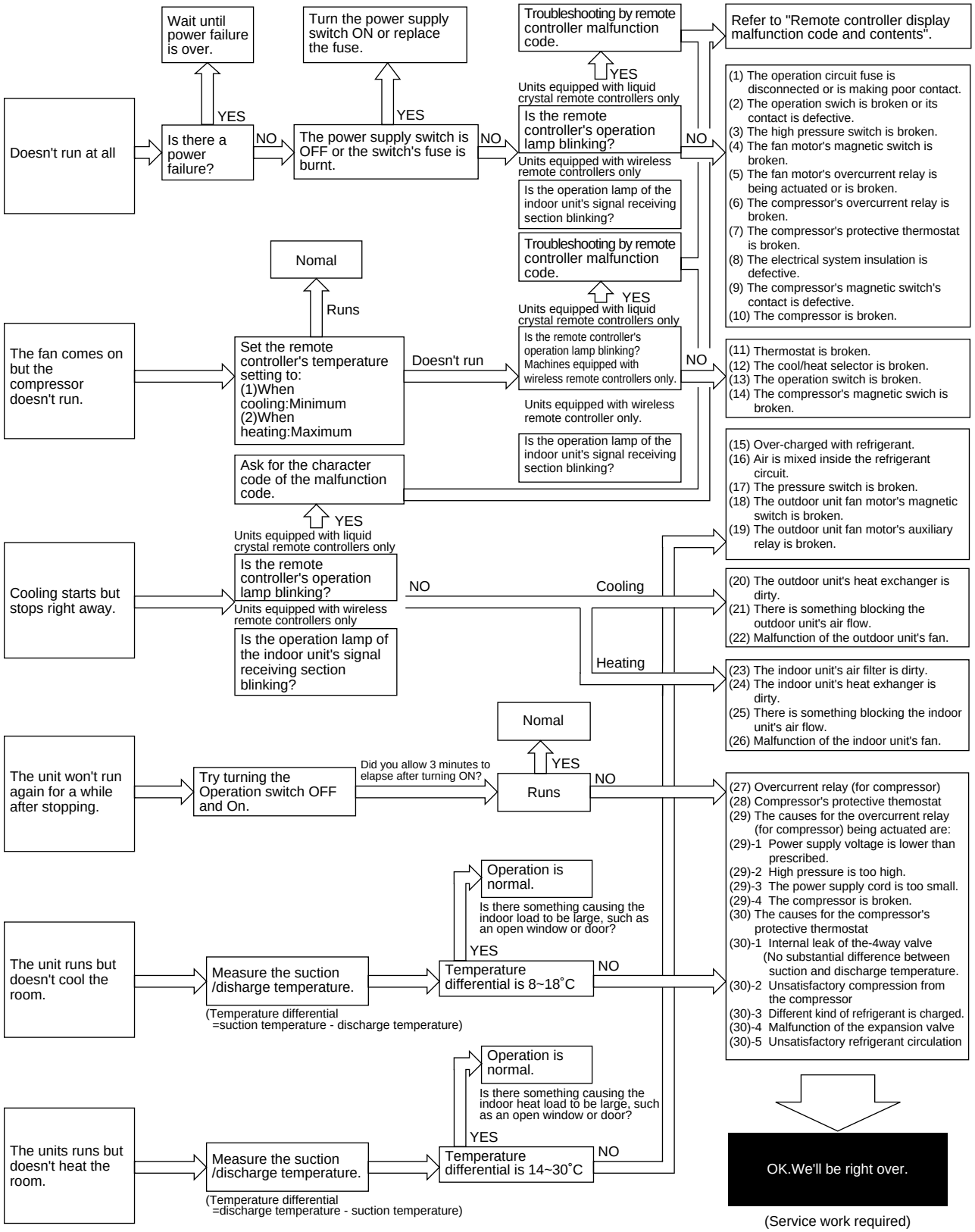

1.3 Overview of General Problems

Overview

	Equipment Condition	Remedy
1	Equipment does not operate.	See page 3-6
2	Fan operates, but compressor does not.	See page 3-8
3	Cooling/heating operation starts but stops immediately.	See page 3-10
4	Equipment operates but does not provide heating.	See page 3-12
7	Equipment discharges white mist.	See page 3-14
8	Equipment produces loud noise or shakes.	See page 3-15
9	Equipment discharges dust.	See page 3-16
10	remote control LCD displays “88.”	See page 3-17
11	Indoor swing flap does not operate.	See page 3-18
12	Equipment emits odor.	Room smell and cigarette odors accumulated inside the indoor unit are discharged with air. Inside of the indoor unit must be cleaned.
13	Flap operates when power is turned on.	It is normal. The flap initializes for accurate positioning.
14	Change of operation mode causes flap to move.	It is normal. There is a control function that moves the flap when operation mode is changed.
15	Fan operates in “M” mode during heating even if remote control is set to “Low.”	It is normal. It is caused by the activation of the overload control (airflow shift control).
16	Flap automatically moves during cooling.	It is normal. It is caused by the activation of the dew prevention function or ceiling soiling prevention function.
17	Indoor unit fan operates in “L” mode for 1 minute in microcomputer-controlled dry mode even if compressor is not operating.	It is normal. The monitoring function forcibly operates the fan for one minute.
18	In simultaneous ON/OFF multi-system setup, indoor unit (sub) does not operate in sync with the other indoor unit (main). (Flat, fan, etc.)	It is normal. It is caused by a signal transmission lag.
19	Indoor unit fan operates after heating operation stops.	It is normal. The fan operates in the “LL” mode for 60 to 100 seconds to dissipate the residual heat in the heater.
20	Drain pump operates when equipment is not operating.	It is normal. The drain pump continues to operate for several minutes after equipment is turned off.
21	Horizontal swing sends air to different directions in cooling and heating even if it is set to the same position.	It is normal. The airflow direction in cooling/dry operation is different from that in heating/fan operation.
22	Flap remains horizontal even if it is set to Swing.	It is normal. The flap does not swing in the thermostat OFF mode.

3

1.3.1 Equipment does not operate

Applicable Model

All models of SkyAir series

Error Detection Method

Error Generating Condition

Possible Causes

- Fuse blown or disorder of contact in operation circuit
- Faulty operation switch or contact point
- Faulty high pressure switch
- Faulty magnetic switch for fan motor
- Activation or fault of overcurrent relay for fan motor
- Faulty overcurrent relay for compressor
- Faulty compressor protection thermostat
- Insufficient insulation in electric system
- Faulty contact point of magnetic switch for compressor
- Malfunction of compressor
- Defective remote control or low batteries (wireless)
- Check if address is set correctly on wireless R.C.

Troubleshooting

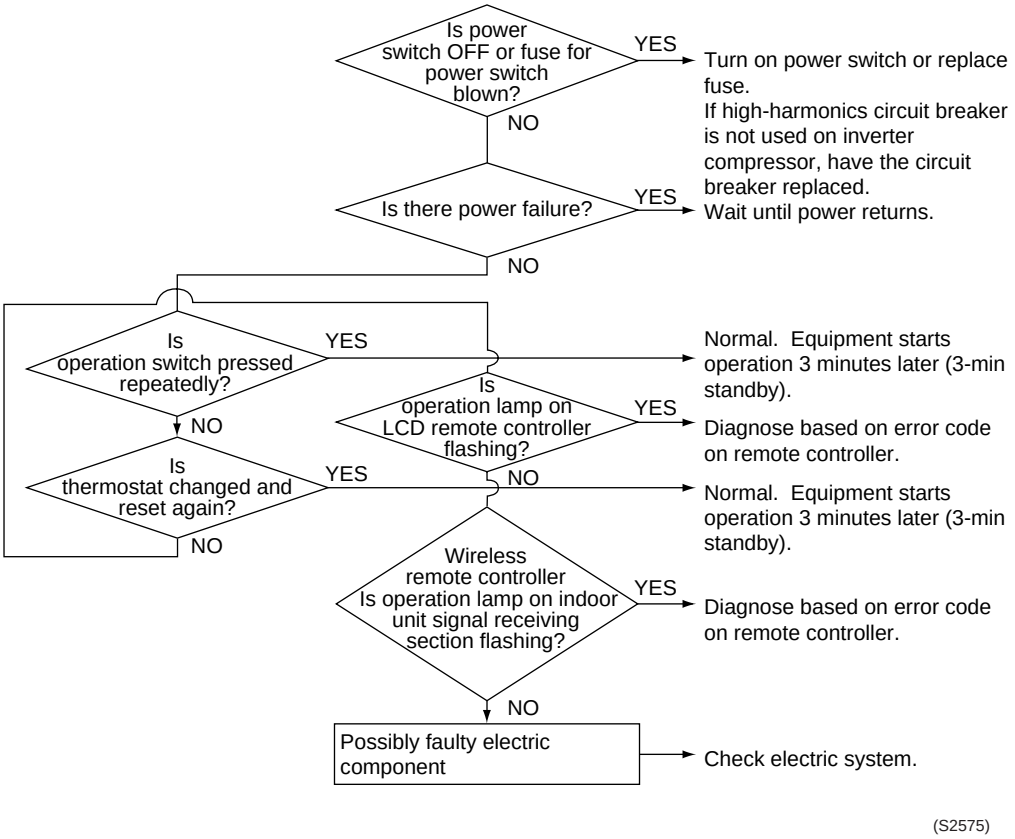

Caution

Be sure to turn off power switch before connect or disconnect connector, or parts damage may be occurred.

1.3.2 Indoor fan operates, but compressor does not

Applicable Model

All models of SkyAir series

Method of Malfunction Detection

Malfunction Decision Conditions

Possible Causes

- Faulty thermistor
- Faulty indoor/outdoor unit PCB
- Faulty magnetic switch
- Faulty power transistor
- Faulty compressor

Troubleshooting

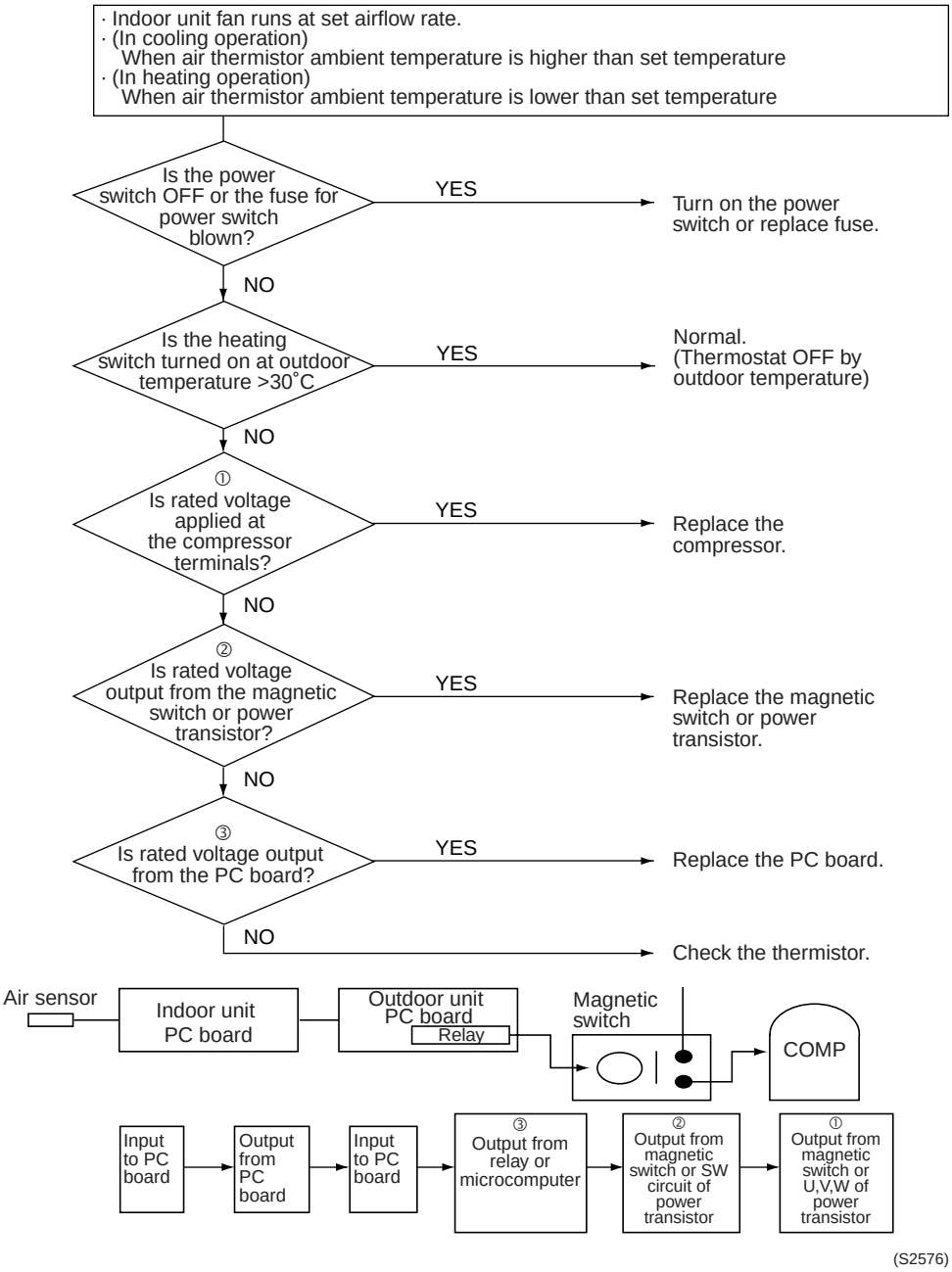

Caution

Be sure to turn off power switch before connect or disconnect connector, or parts damage may be occurred.

1.3.3 Cooling/heating operation starts but stops immediately

Applicable Model

All models of SkyAir series

Error Detection Method

Error Generating Condition

Possible Cause

- Excess charge of refrigerant
- Air intrudes into refrigerant system
- Faulty pressure switch
- Faulty magnetic switch for outdoor unit fan motor
- Faulty aux. relay for outdoor unit fan motor
- Soiled heat exchanger of outdoor unit
- There is an interfering item in air flow of outdoor unit
- Malfunction of outdoor unit fan
- Soiled air filter of indoor unit
- Soiled heat exchanger of indoor unit
- There is some interfering item in airflow of indoor unit
- Malfunction of indoor unit fan

Troubleshooting

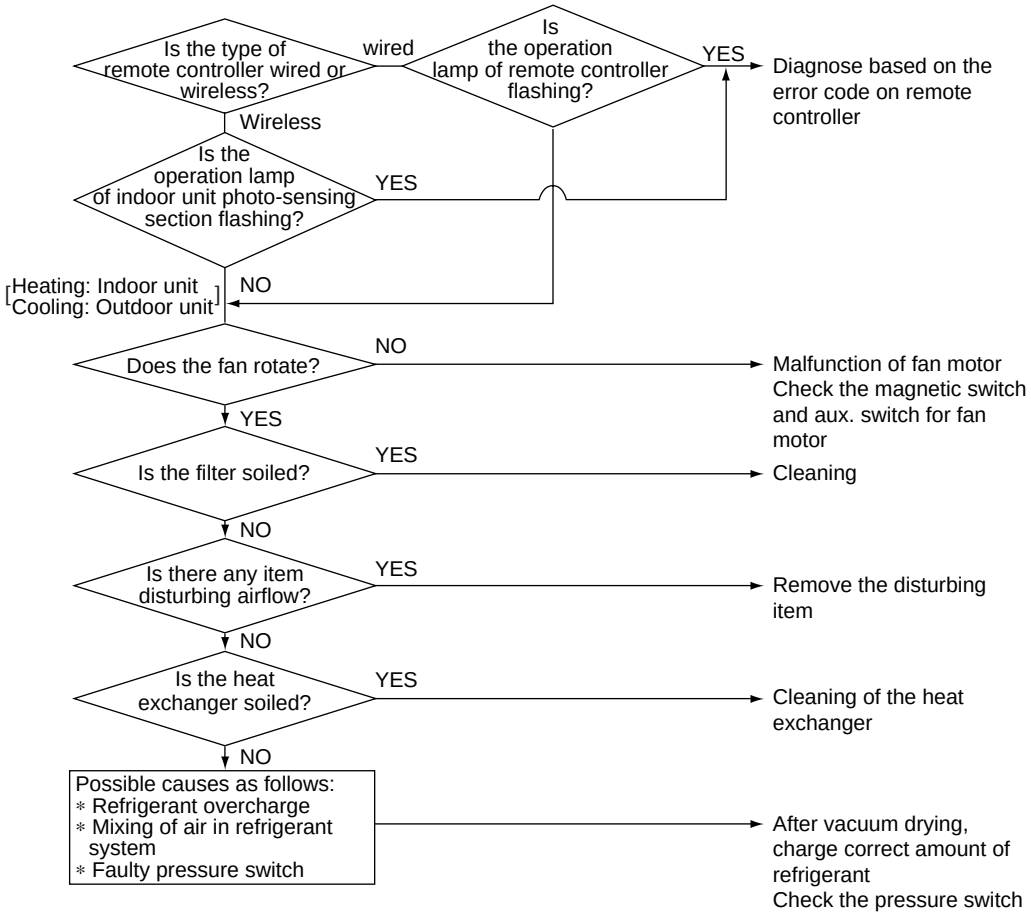

Caution

Be sure to turn off power switch before connect or disconnect connector, or parts damage may be occurred.

1.3.6 Equipment operates but does not provide heating

Applicable Model

All models of SkyAir series

Error Detection Method

Error Generating Condition

Possible Cause

- Excess charge of refrigerant
- Air intrudes into refrigerant system
- Faulty pressure switch
- Faulty magnetic switch for outdoor unit fan motor
- Faulty aux. relay for outdoor unit fan motor
- Soiled heat exchanger of outdoor unit
- There is an interfering item in air flow of outdoor unit
- Malfunction of outdoor unit fan
- Soiled air filter of indoor unit
- Soiled heat exchanger of indoor unit
- There is some interfering item in airflow of indoor unit
- Malfunction of indoor unit fan

Troubleshooting

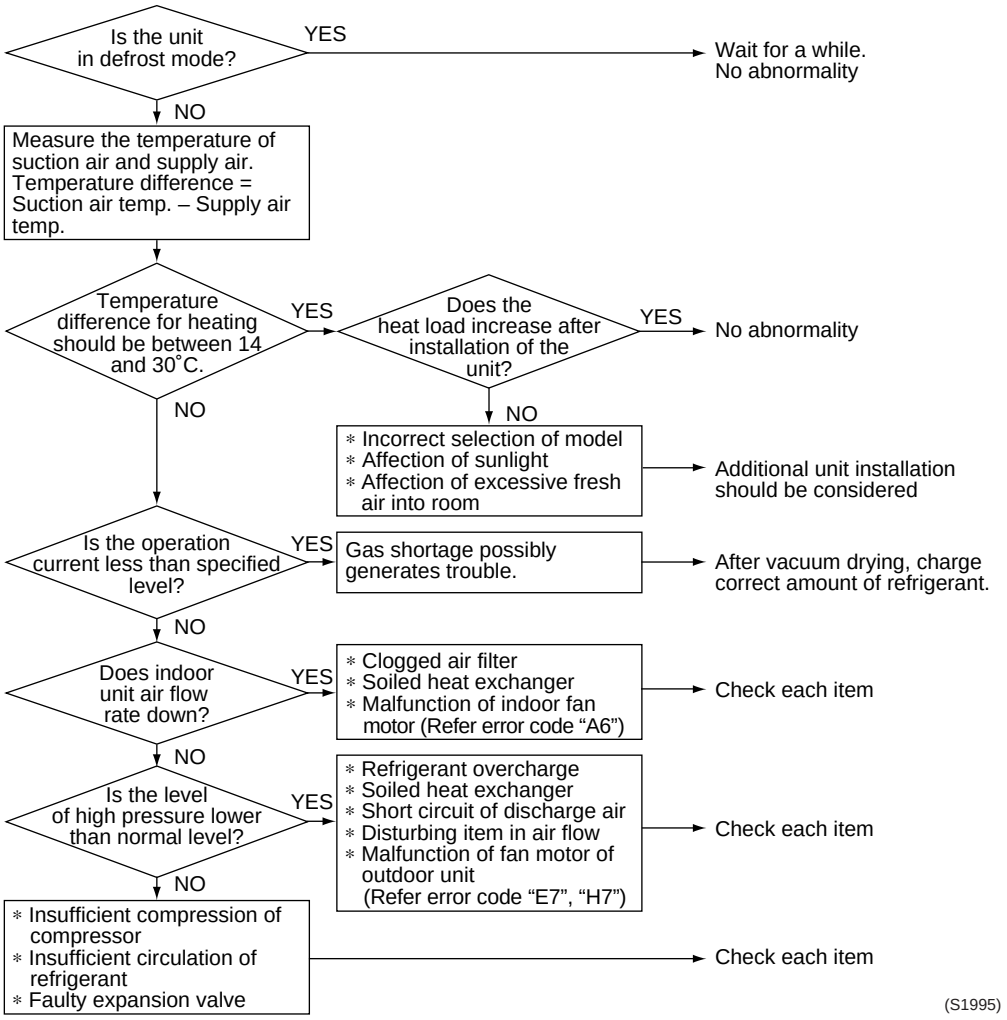

Caution

Be sure to turn off power switch before connect or disconnect connector, or parts damage may be occurred.

1.3.7 Equipment discharges white mist

Applicable Model

All models of SkyAir series

Error Detection Method

Error Generating Condition

Possible Cause

- Humid installation site
- Installation site is dirty and with dense oil mists.
- Soiled heat exchanger
- Clogged air filter
- Malfunction of fan motor

Troubleshooting

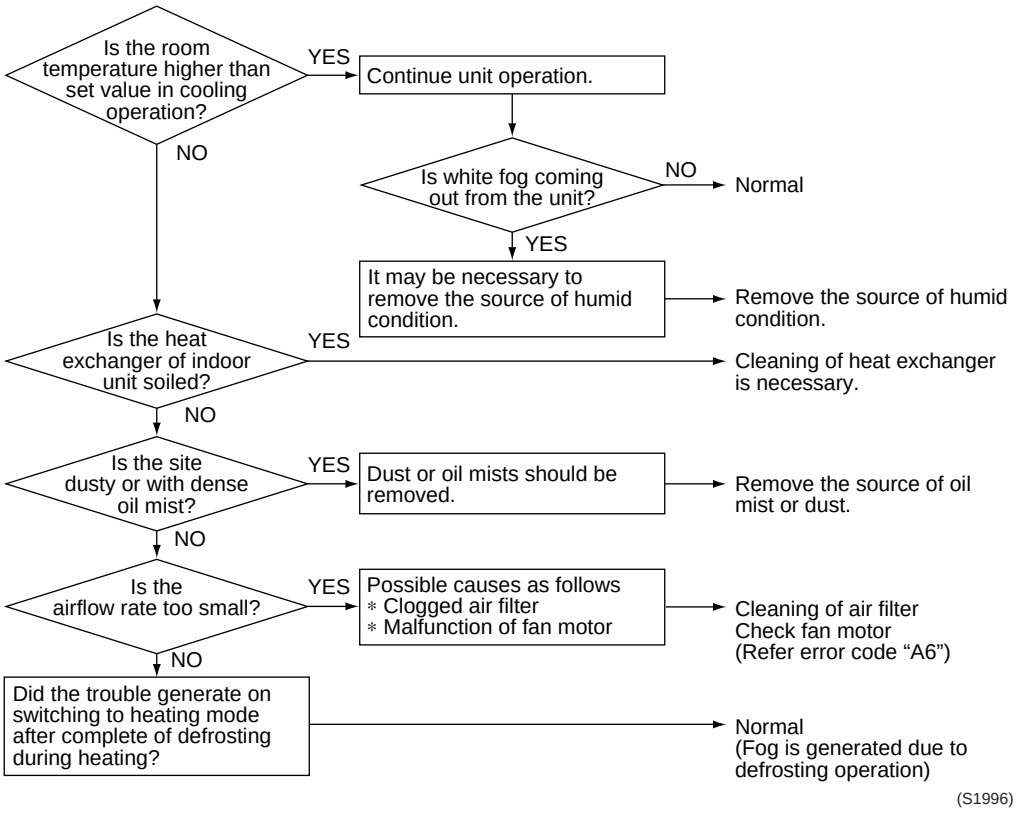

Caution

Be sure to turn off power switch before connect or disconnect connector, or parts damage may be occurred.

1.3.8 Equipment produces loud noise or shakes

Applicable Model

All models of SkyAir series

Error Detection Method

Error Generating Condition

Possible Cause

- Excess charge of refrigerant
- Air intrudes into refrigerant system
- Flushing noise due to refrigerant shortage. (Sound of shoo...)

Troubleshooting

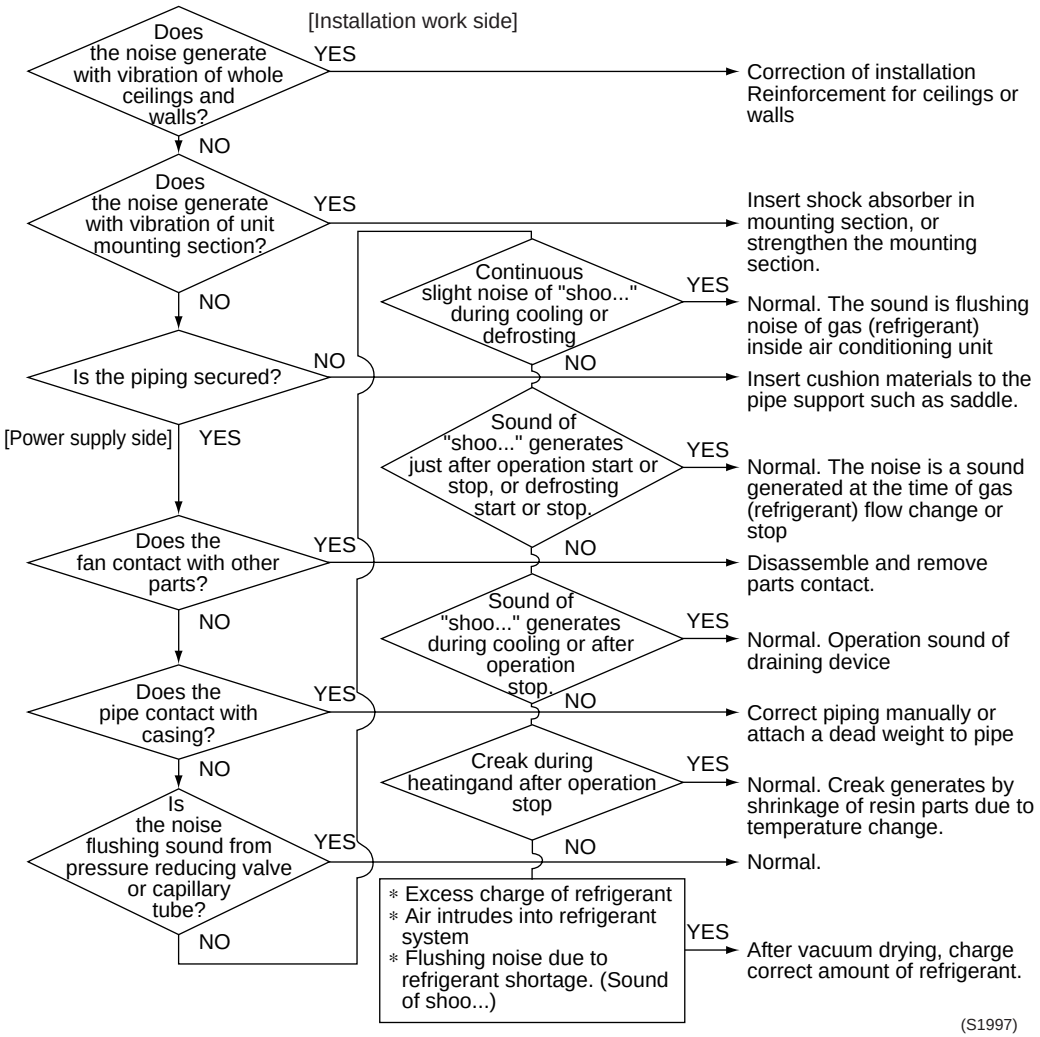

Caution

Be sure to turn off power switch before connect or disconnect connector, or parts damage may be occurred.

1.3.9 Equipment discharges dust

Applicable Model

All models of SkyAir series

Error Detection Method

Error Generating Condition

Possible Cause

- Carpet
- Animal's hair
- Application (cloth shop,...)

Troubleshooting

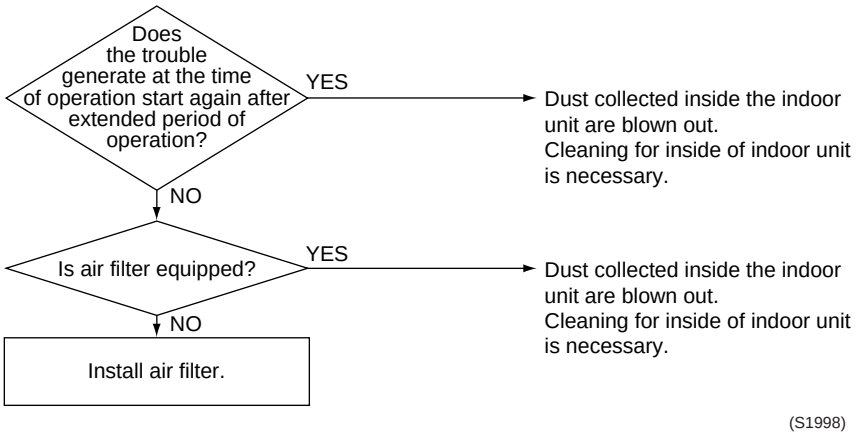

Caution

Be sure to turn off power switch before connect or disconnect connector, or parts damage may be occurred.

1.3.10 remote control LCD displays "88"

Applicable Model

All models of SkyAir series

Error Detection Method

Error Generating Condition

Possible Cause

Troubleshooting

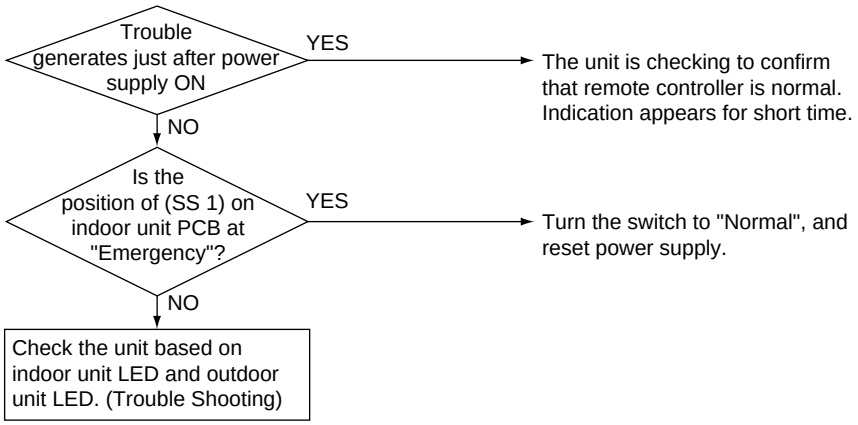

(S1999)

Caution

Be sure to turn off power switch before connect or disconnect connector, or parts damage may be occurred.

1.3.11 Swing flap does not operate

Applicable Models	FUQ, FHQ, FAQ100
Method of Malfunction Detection	Utilizes ON/OFF of the limit switch when the motor turns.
Malfunction Decision Conditions	When ON/OFF of the micro switch for positioning cannot be reversed even through the swing flap motor for a specified amount of time (about 30 seconds).
Remark	Some functions can force the swing flap into a fixed position, altough swing mode is selected on the remote control. This is not an unit error, but a control function to prevent draft to the customer. Before starting the troubleshooting, make sure the swing flap is not forced into such a fixed position. (e.g. Hot start, defrost operation, thermostat OFF in heating operation or freeze prevention in cooling operation. For details see "Fan and Flap Operations" on page 2-22)
Possible Causes	■ Faulty swing motor ■ Faulty micro switch ■ Faulty connector connection ■ Faulty indoor unit PC board

Troubleshooting

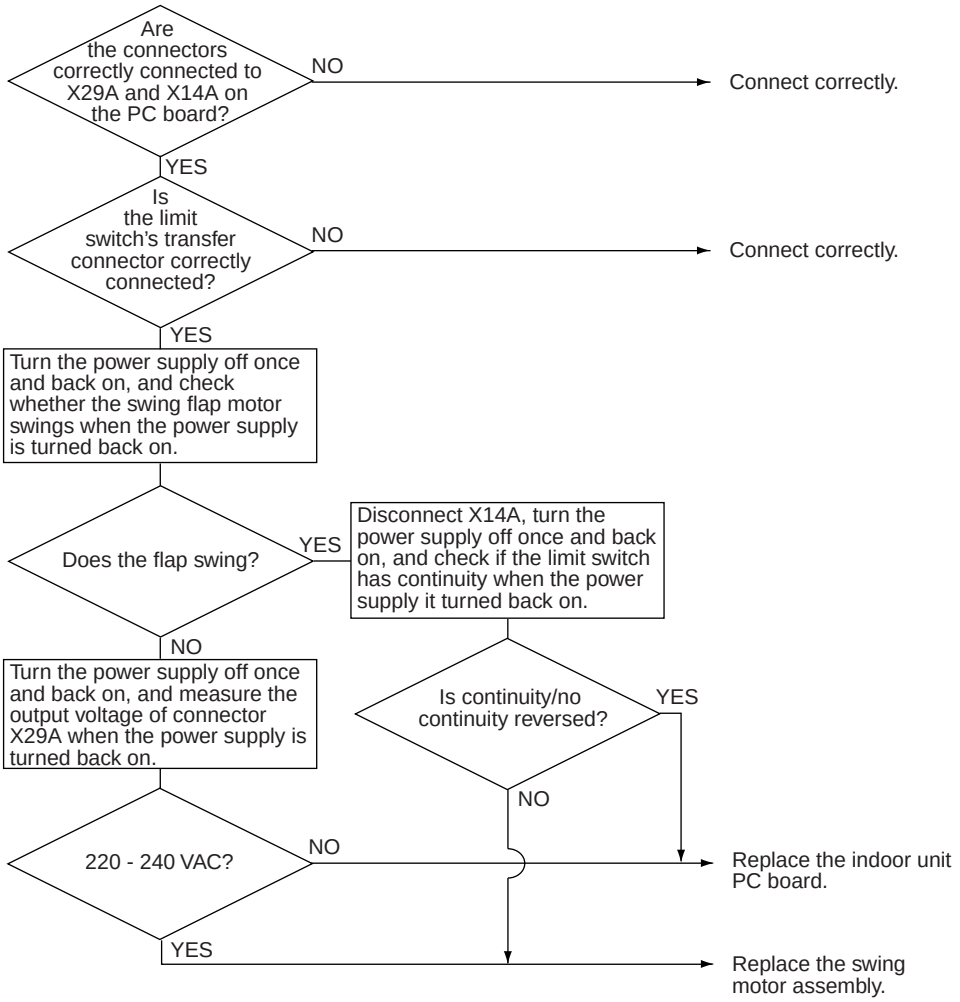

Caution

Be sure to turn off power switch before connect or disconnect connector, or parts damage may be occurred.

1.4 Procedure of Self-Diagnosis by remote control

The inspection/test button

The following modes can be selected by using the [Inspection/Test Operation] button on the remote control.

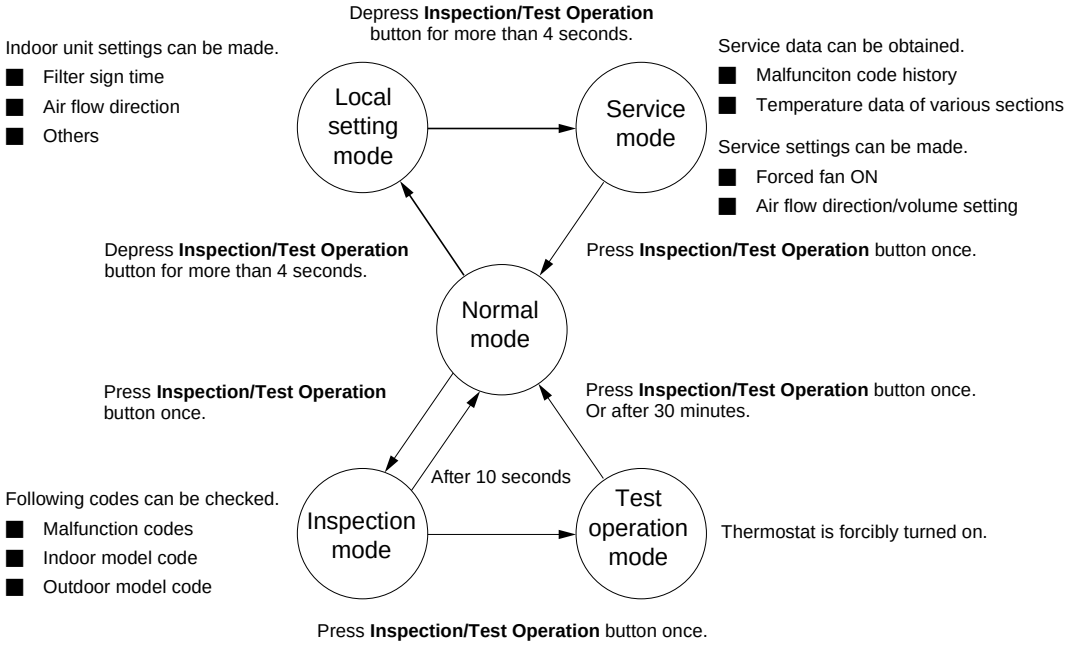

1.5 Fault-diagnosis by Wired remote control

Explanation

If operation stops due to malfunction, the remote control's operation LED blinks, and malfunction code is displayed. (Even if stop operation is carried out, malfunction contents are displayed when inspection mode is entered.) The malfunction code enables you to tell what kind of malfunction caused operation to stop. See page 3-26 for malfunction code and malfunction contents.

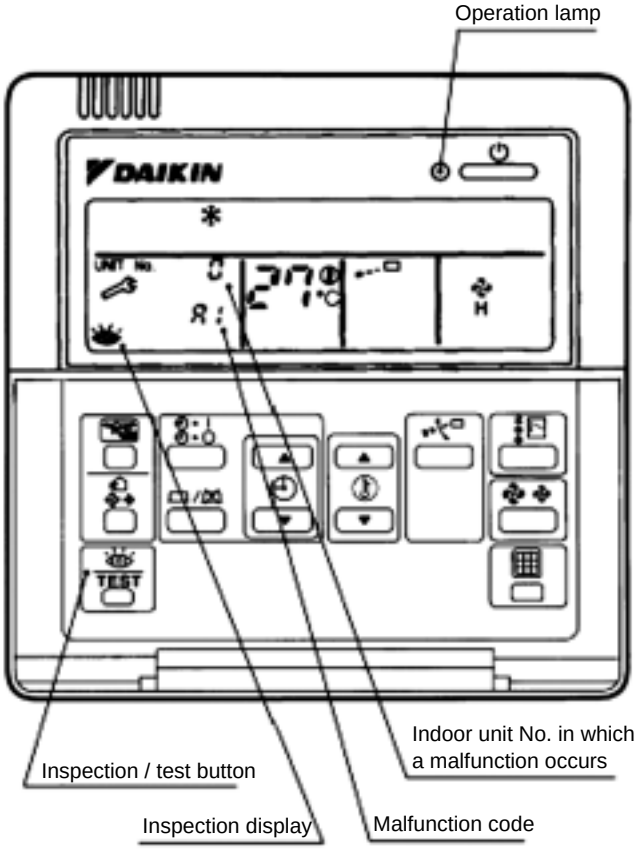

1.6 Fault-diagnosis by infrared remote control

Introduction

Contrary to the wired remote control, the infrared remote control does not display the error code. Instead, the operation LED on the light reception section flashes.

Checking

To find the error code, proceed as follows:

Step	Action
1	Press the INSPECTION/TEST button to select “inspection”. The equipment enters the inspection mode. “0” flashes in the UNIT No. display. 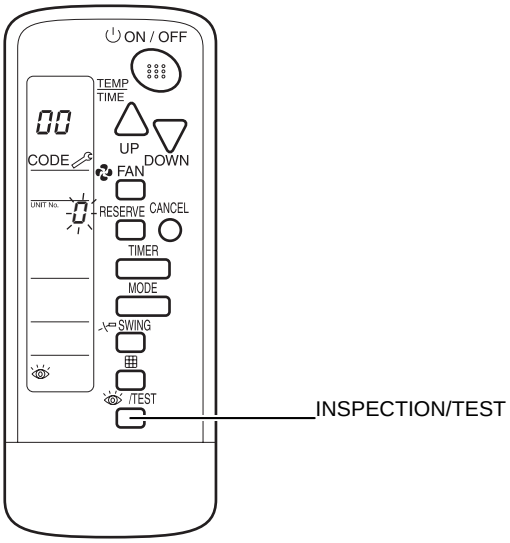

Step	Action
2	Press the UP or DOWN button and change the UNIT No. until the receiver of the remote control starts to beep.

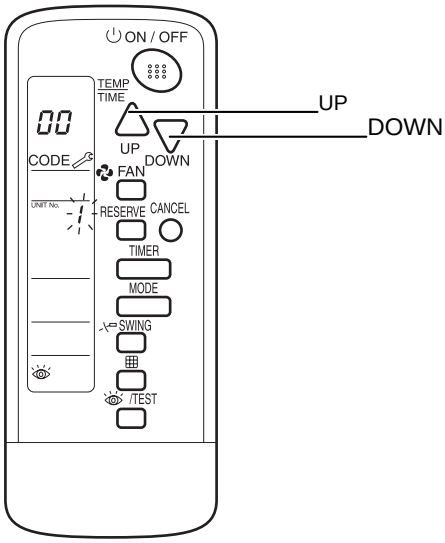

If you hear...	Then...
3 short beeps	Follow all steps below.
1 short beep	Follow steps 3 and 4. Continue the operation in step 4 until you hear a continuous beep. This continuous beep indicates that the error code is confirmed.
1 continuous beep	There is no abnormality.

3	Press the MODE selector button.The left “0” (upper digit) indication of the error code flashes.’

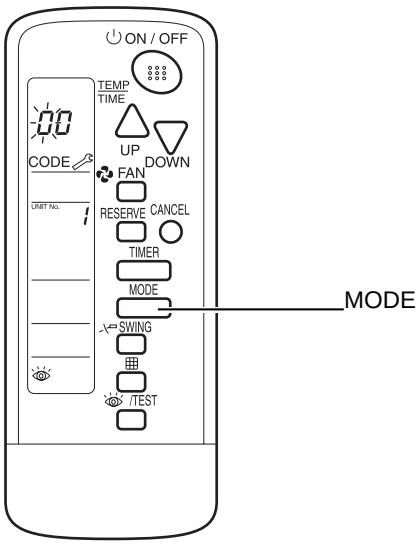

3

Step	Action
4	Press the UP or DOWN button to change the error code upper digit until the receiver of the remote control starts to beep.

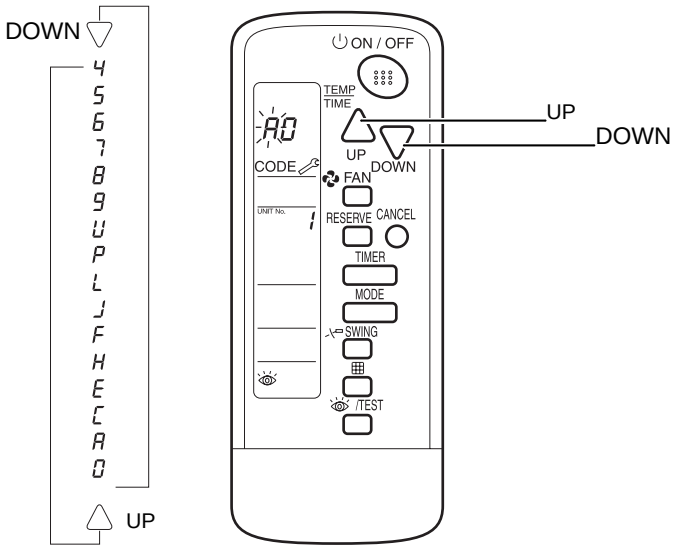

If you hear...	Then...
2 short beeps	The upper digit matches.
1 short beep	No digits match.
1 continuous beep	Both upper and lower digits match.

5	Press the MODE selector button.The right “0” (lower digit) indication of the error code flashes.

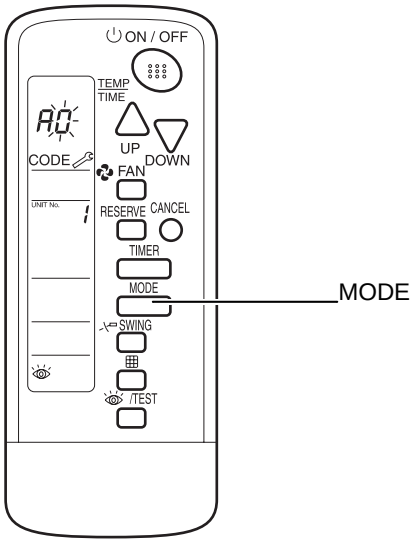

Step	Action
6	Press the UP or DOWN button and change the error code lower digit until the receiver of the remote control generates a continuous beep. 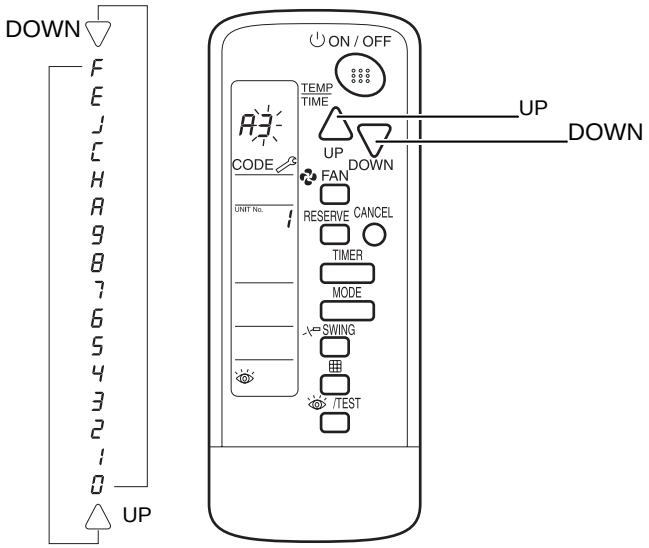
7	Press the MODE button to return to normal status. If you do not press any button for at least 1 min, the remote control returns automatically to normal status. 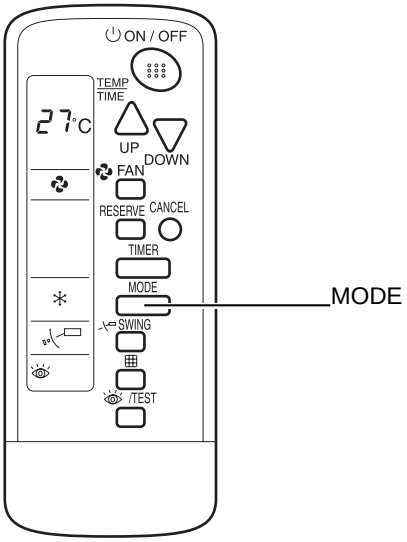

1.7 Overview of Error Codes

Malfunction Code	Contents/Processing	Remarks
A1	Failure of PC board ass'y for indoor unit	
A3	Malfunction of drain water level system	
A6	Indoor unit fan motor overload / overcurrent / lock	(Note 1)
AF	Abnormal drain water level	Activation of float switch during compressor off.
AJ	Failure of capacity setting	Either capacity data is set incorrectly, or capacity has not been set for the data IC
C4	Malfunction of heat exchanger temperature sensor system	
C5	Malfunction of gas piping temperature sensor system	
C9	Malfunction of suction air temperature sensor system	
CC	Malfunction of humidity sensor system	FCQ-D only.
CJ	Malfunction of remote control air temperature sensor system	Failure of remote control air thermistor. Unit can be operated by indoor unit thermistor.
U4/UF	Failure of transmission (between indoor and outdoor unit)	Transmission between indoor and outdoor unit is not being correctly carried out. (Note 1, Note 2)
U5	Failure of transmission (between indoor unit and remote control)	Transmission between indoor and remote control is not being correctly carried out.
U8	Failure of transmission (between "main" and "sub" remote control	Transmission between "main" and "sub" remote control is not being correctly carried out.
UA	Failure of fieldsetting	System fieldsetting error pair, twin, triple, double twin or wrong capacity class.
UC	Address error of central remote control	

■ In the case of the shaded error codes, "inspection" is not displayed. The system operates, but be sure to inspect and repair it.

Notes:

1 There is a possibility of open phase power supply, check power supply also.

2 Operation when a malfunction occurs may differ according to the model.

1.8 Troubleshooting by LED Indications on the Indoor Unit

Foreword

Troubleshooting can be carried out by service monitor LED (green). (Blinks when normal)

☼ : LED on / ● : LED off / ◑ : LED blinks / — : No connection with troubleshooting

Microcomputer Normal Monitor	Transmission Normal Monitor	Contents/Processing
HAP (LED-A)	HBP (LED-B)	
◑	◑	Indoor unit normal → Outdoor unit trouble shooting
◑	☼	Incorrect transmission wiring between indoor and outdoor unit
	●	If outdoor unit's LED-A is off, proceed outdoor unit's trouble shooting. If outdoor unit's LED-A blinks, failure of wiring or indoor or outdoor unit P.C board ass'y. (Note 4)
☼	—	Failure of indoor unit PC board ass'y (Note 5)
●		Malfunction of power supply or failure of PC board ass'y or broken transmission wire between indoor and outdoor unit. (Note 5)

Notes:

1. When the INSPECTION/TEST button of remote control is pushed, **INSPECTION** display blinks entering **INSPECTION** mode.
2. In the **INSPECTION** mode, when the ON/OFF button is pushed and held for 5 seconds or more, the aforementioned malfunctioning history display is off. In this case, after the malfunction code blinks 2 times, the code display turns to "00" (=Normal) and the unit No. turns to "0". The INSPECTION mode automatically switches to the normal mode (set temperature display).
3. Operation halts due to malfunction depending on the model or condition.
4. If LED-B is off, the transmission wiring between indoor and outdoor unit may be incorrect or disconnected. Before performing the previously described troubleshooting, check the transmission wiring.
5. Troubleshoot by turning off the power supply for a minimum of 5 seconds, turning it back on, and then rechecking the LED display.

3

1.9 Troubleshooting by remote control Display / LED Display

Explanation for Symbols

◑ : LED blinks / ☼ : LED on / ● : LED off / — : No connection with troubleshooting

◎ : High probability of malfunction
○ : Possibility of malfunction
□ : Low probability of malfunction
— : No possibility of malfunction (do not replace)

1.9.1 Indoor Malfunctions

3

Indoor Unit Mal-functions	Indoor Unit LED Display Note 2		remote control Display	Location of Malfunction				Contents of Malfunction	Details of Malfunction (Reference Page)
	H1P	H2P		Other than PC Board	PC Board				
					Out-door Unit	Indoor Unit	remote control		
	◑	◑	*Note 1	—	—	—	—	Normal → to outdoor unit	—
	◑	☼	A1	—	—	○	—	Malfunction indoor unit PC board (For troubleshoot-ing by LED, refer to p.27.)	3–32
	◑	●							
	☼	—							
	●	—							
	◑	◑	A3	◎	—	—	—	Malfunction of drain water level system	3–33
	◑	◑	AF	◎	—	—	—	Malfunction of drain sys-tem	3–35
	◑	◑	A6	◎	—	□	—	Indoor unit fan motor lock	3–36
	◑	◑	AJ	◎	—	○	—	Malfunction of capacity setting	3–38
	◑	◑	C4	◎	—	□	—	Malfunctioning heat exchanger thermistor sys-tem.	3–40
	◑	◑	C5	◎	—	□	—	Malfuncioning gaspipe thermistor system.	3–40
	◑	◑	C9	◎	—	□	—	Malfunctioning suction air thermistor system.	3–40
	◑	◑	CC	—	—	—	—	Malfunctioning of humidity sensor system	3–43
	◑	◑	CJ	—	—	□	—	Malfunctioning remote control air thermisto	3–42

1.9.2 System Malfunctions

Outdoor Unit Malfunction	remote control Display	Location of Malfunction				Contents of Malfunction	Details of Malfunction (Reference Page)
		Other than PC Board	PC Board				
			Outdoor Unit	Indoor Unit	remote control		
	U4 or UF	◎	○	○	—	Transmission error (between indoor and outdoor unit)	3–4
	U5	◎	—	○	○	Transmission error (between indoor and remote control)	3–6
	U8	◎	—	○	○	Transmission error between “main” remote control and “sub” remote control	3–7
	UA	◎	—	○	—	Excessive indoor units connected to this system.	3–8
	UC	◎	—	—	○	Centralized address setting error	3–10

3

1.10 Overview of the Indoor Safety Devices

	Thermal protector		Thermal fuse fan motor
	Abnormal	**Reset (automatic)**	
FCQ35, 50, 60, 71B	>130°C +/-5°C	<83°C +/-20°C	N.A.
FCQ100, 125B	>140°C +/-5°C	<45°C +/-15°C	N.A.
FCQ71, 100, 125, 140D	N.A.	N.A.	N.A.
FFQ25, 35, 50, 60B	>130°C +/-5°C	<83°C +/-20°C	N.A.
FBQ35, 50, 60, 71,100, 125B	N.A.	N.A.	>152 +/-2°C
FDQ125, 200, 250B	N.A.	N.A.	>160 °C
FHQ35, 50, 60, 71, 100, 125B	>130°C +/-5°C	<83°C +/-20°C	N.A.
FUQ71, 100, 125B	>130°C +/-5°C	<83°C +/-20°C	N.A.
FAQ71, 100B	>130°C +/-5°C	<83°C +/-20°C	N.A.
FDEQ71, 100, 125B	N.A.	N.A.	>152 +/-2°C

2 Error Codes

2.1 What Is in This Chapter?

Introduction

In the first stage of the troubleshooting sequence, it is important to correctly interpret the error code on the remote control display. The error code helps you to find the cause of the problem.

Shutdown

For some errors, the system only shuts down when the error occurs several times. This means that you have to wait until the system shuts down to be able to see the flashing LED on the front panel and the error code on the remote control.

Overview

This chapter contains the following topics:

Topic	See page
2.2–Malfunctioning Indoor PCB (A1)	3–32
2.3–Malfunction of Drain Water Level System (A3)	3–33
2.4–Malfunctioning Drain System (AF)	3–35
2.5–Indoor Unit Fan Motor Lock (A6)	3–36
2.6–Malfunctioning Capacity Setting (AJ)	3–38
2.7–Thermistor Abnormality (C4, C5, C9)	3–40
2.8–Malfunctioning remote control Air Thermistor (CJ)	3–42
2.9–Malfunctioning of Moisture Sensor System (CC)	3–43

2.2 Malfunctioning Indoor PCB (A1)

Error code

A1

LED indications

The table below shows the LED indications.

Operation	HAP (green)	HBP (green)
Normal	◑	◑
Malfunctioning	◑	☼
	◑	●
	☼	—
	●	—

Error generation

The error is generated when the data from the EEPROM is not received correctly.

EEPROM (Electrically Erasable Programmable Read Only Memory): A memory chip that holds its content without power. It can be erased, either within the computer or externally and usually requires more voltage for erasure than the common +5 volts used in logic circuits. It functions like non-volatile RAM, but writing to EEPROM is slower than writing to RAM.

Causes

The possible cause is a malfunctioning indoor PCB.

Troubleshooting

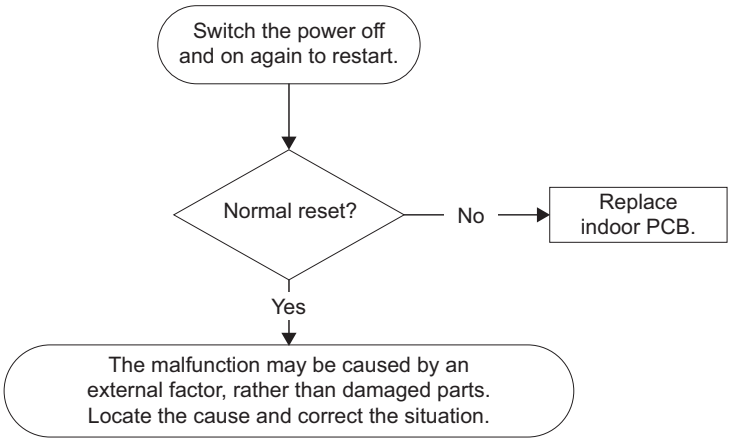

Caution

Be sure to turn off power switch before connect or disconnect connector, or parts damage may be occurred.

2.3 Malfunction of Drain Water Level System (A3)

Error code

A3

LED indications

The table below shows the LED indications.

Operation	HAP (green)	HBP (green)
Normal	☼	☼
Malfunctioning	☼	☼

Error generation

The error is generated when the water level reaches its upper limit and when the float switch turns OFF.

Causes

The possible causes are:

- Malfunctioning drain pump
- Improper drain piping work
- Drain piping clogging
- Malfunctioning float switch
- Malfunctioning indoor unit PCB
- Malfunctioning short-circuit connector X15 on PCB.

3

Troubleshooting

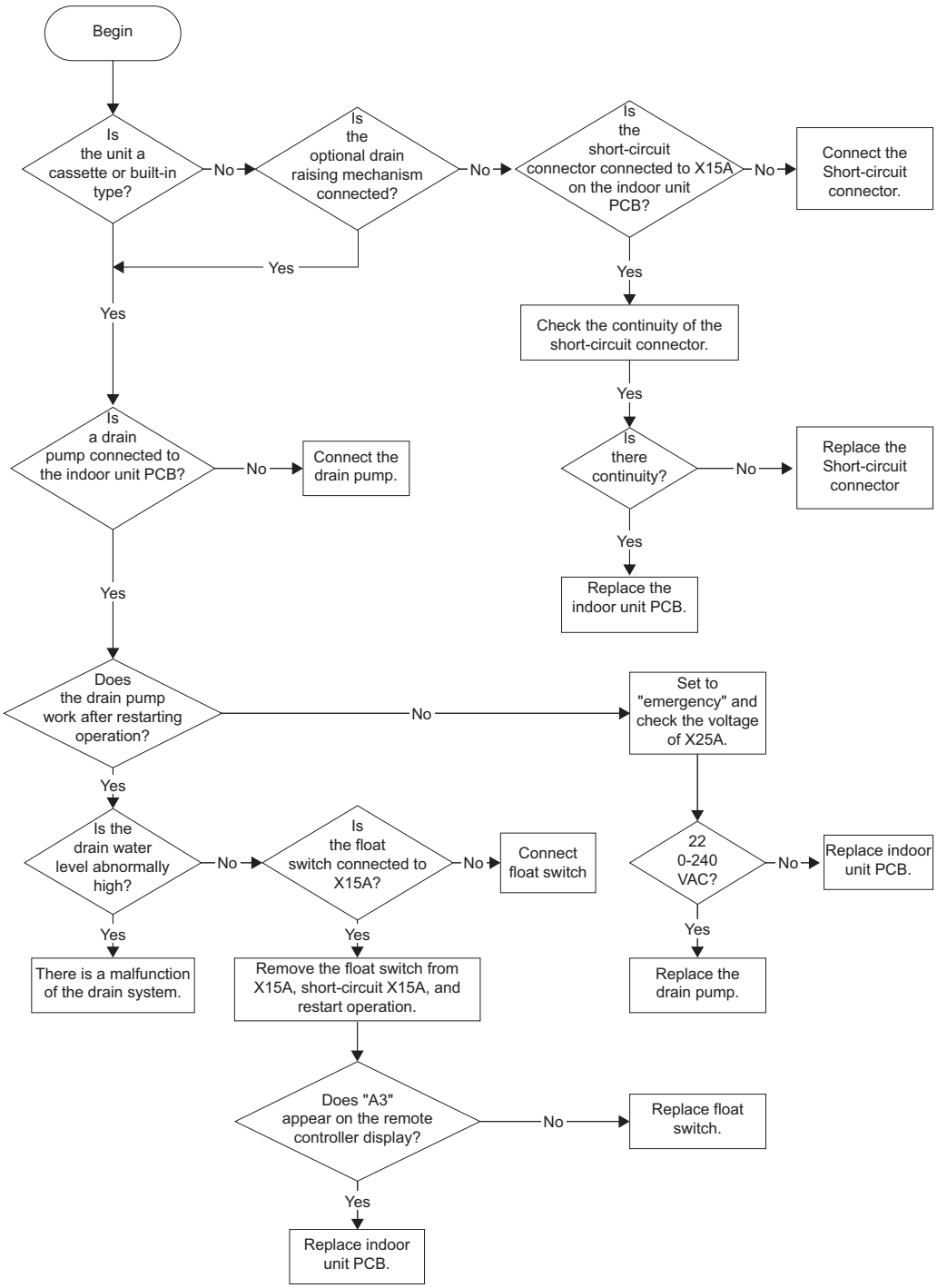

Remark If "A3" is detected by a PC board which is not mounted with X15A, the PC board is defective.

Caution Be sure to turn off power switch before connect or disconnect connector, or parts damage may be occurred.

2.4 Malfunctioning Drain System (AF)

Error code

AF

LED indications

The table below shows the LED indications.

Operation	HAP (green)	HBP (green)
Normal	☀	☀
Malfunctioning	☀	☀

Error generation

The error is generated when the float switch changes from ON to OFF while the compressor is OFF.

Causes

The possible causes are:

- Error in the drain pipe installation
- Malfunctioning float switch
- Malfunctioning indoor unit PCB.

Troubleshooting

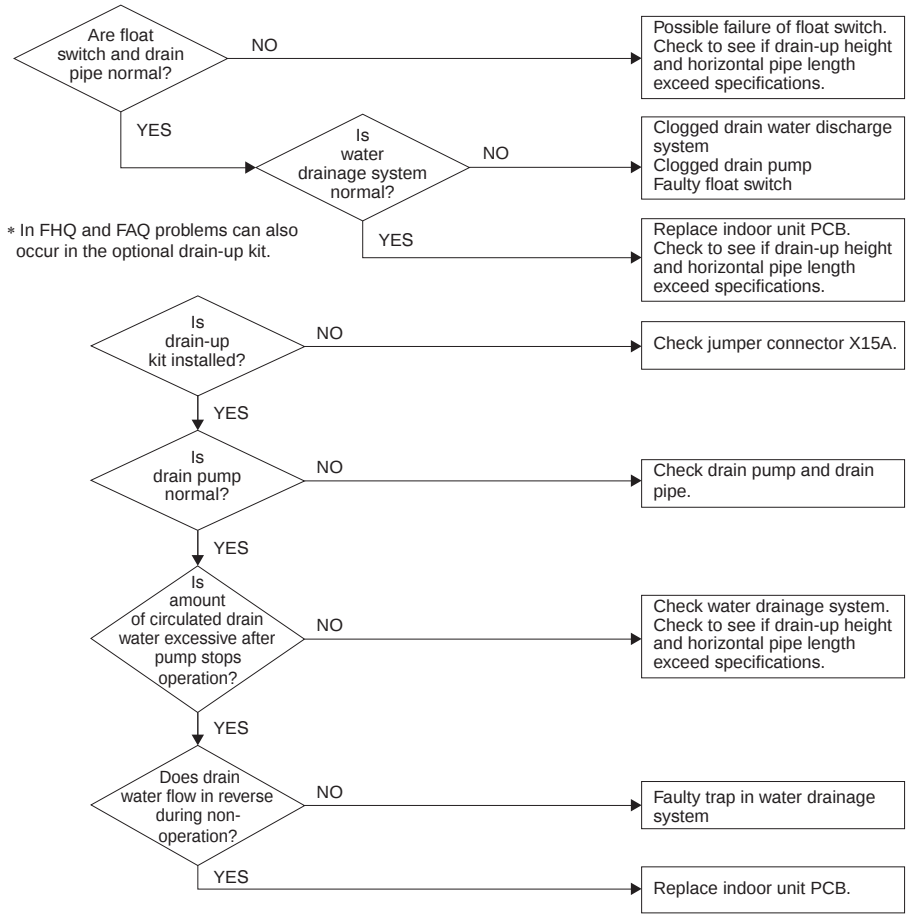

Caution

Be sure to turn off power switch before connect or disconnect connector, or parts damage may be occurred.

2.5 Indoor Unit Fan Motor Lock (A6)

Error code

A6

LED indications

The table below shows the LED indications.

Operation	HAP (green)	HBP (green)
Normal	☼	☼
Malfunctioning	☼	☼

3

Error generation

The error is generated when the fan rotations are not detected while the output voltage to the fan is at its maximum.

Causes

The possible causes are:

- Malfunctioning indoor unit fan motor
- Broken or disconnected wire
- Malfunctioning contact
- Malfunctioning indoor unit PCB.

Troubleshooting

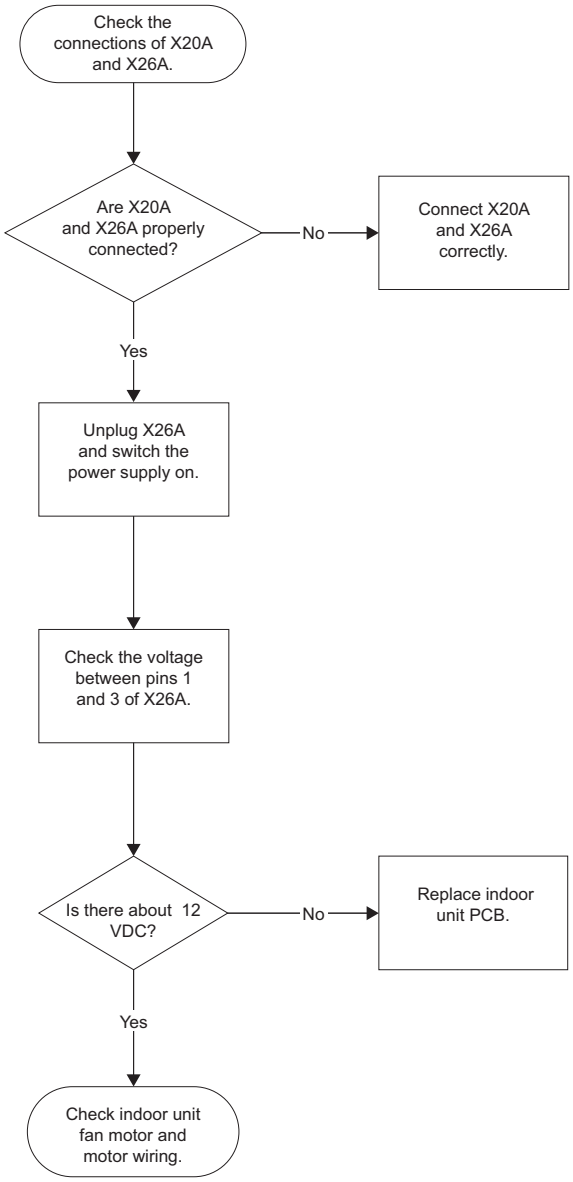

Caution

Be sure to turn off power switch before connect or disconnect connector, or parts damage may be occurred.

2.6 Malfunctioning Capacity Setting (AJ)

Error code

AJ

LED indications

The table below shows the LED indications.

Operation	HAP (green)	HBP (green)
Normal	☼	☼
Malfunctioning	☼	☼

3

Error generation

The error is generated when the following conditions are fulfilled:

Condition	Description
1	■ The unit is in operation. ■ The PCB's memory IC does not contain the capacity code. ■ The capacity setting adapter is not connected.
2	■ The unit is in operation. ■ The capacity that is set, does not exist for that unit.

Causes

The possible causes are:

- Malfunctioning capacity setting adapter connection
- Malfunctioning indoor unit PCB.

Capacity setting adapter

The capacity is set in the PCB's memory IC. A capacity setting adapter that matches the capacity of the unit is required in the following case:

In case the indoor PCB installed at the factory is for some reason changed at the installation site, the capacity will not be contained in the replacement PCB. To set the correct capacity for the PCB you have to connect a capacity setting adapter with the correct capacity setting to the PCB. The capacity setting for the PCB will become the capacity setting of the adapter because the capacity setting adapter has priority.

Troubleshooting

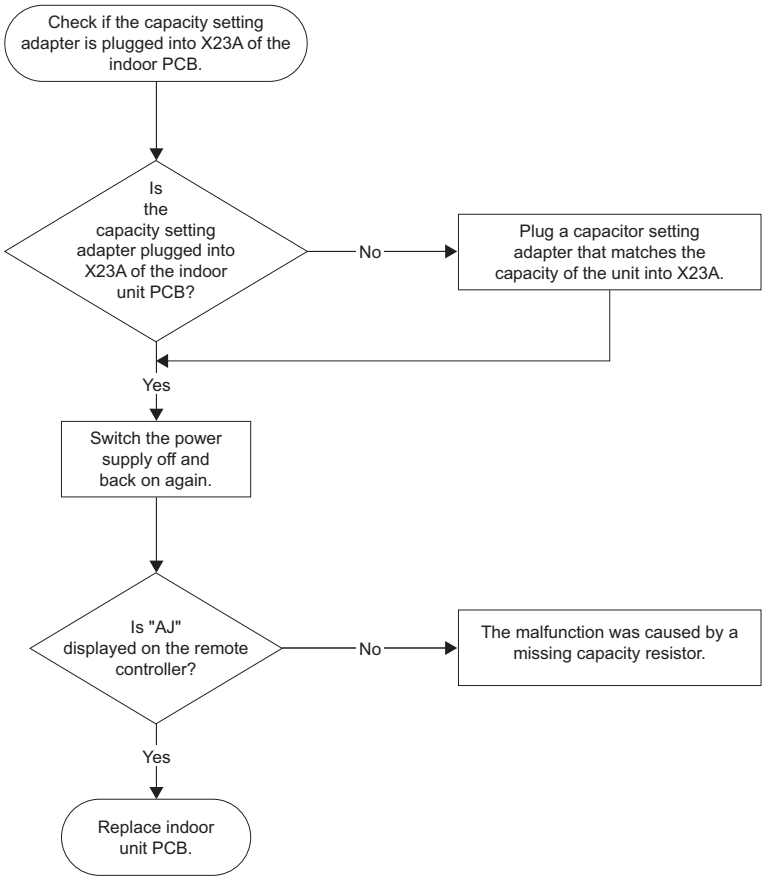

Caution

Be sure to turn off power switch before connect or disconnect connector, or parts damage may be occurred.

2.7 Thermistor Abnormality (C4, C5, C9)

Error code

The table below describes the two thermistor abnormalities.

Error	Description
C4	Malfunctioning heat exchanger thermistor system.
C5	Malfuncioning gaspipe thermistor system.
C9	Malfunctioning suction air thermistor system.

3

LED indications

The table below shows the LED indications.

Operation	HAP (green)	HBP (green)
Normal	☀	☀
Malfunctioning	☀	☀

Error generation

The error is generated when during compressor operation:

- Thermistor input > 4.96 V, or
- Thermistor output < 0.04 V.

Causes

The possible causes are:

- Malfunctioning connector connection
- Malfunctioning thermistor
- Malfunctioning PCB
- Broken or disconnected wire.

Checking thermistors

See page 3–56.

Troubleshooting

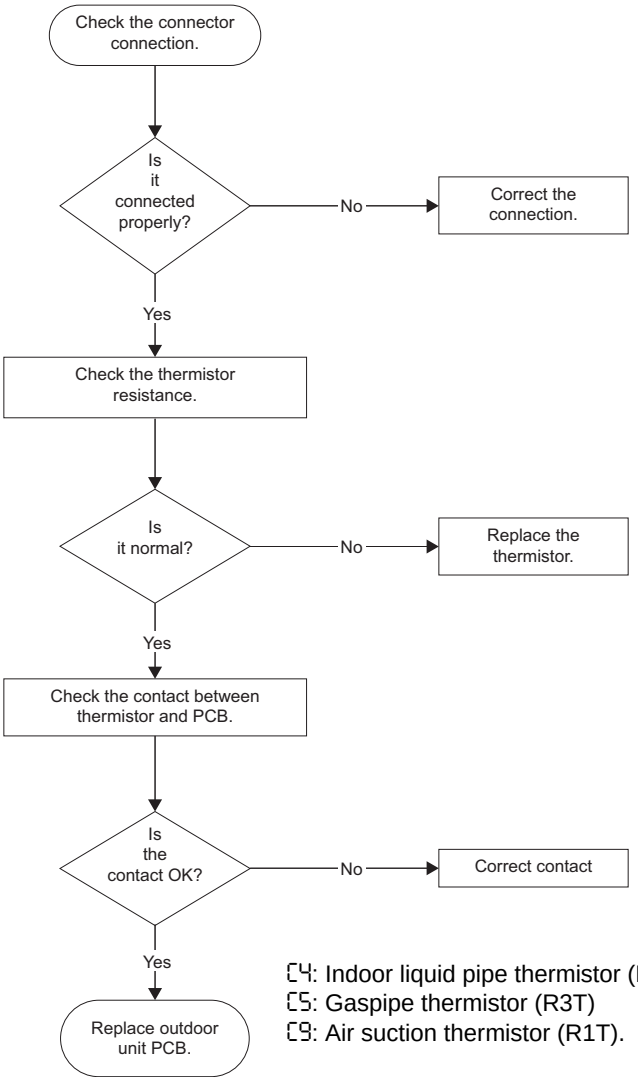

C4: Indoor liquid pipe thermistor (R2T).
C5: Gaspipe thermistor (R3T)
C9: Air suction thermistor (R1T).

Caution

Be sure to turn off power switch before connect or disconnect connector, or parts damage may be occurred.

2.8 Malfunctioning remote control Air Thermistor (CJ)

Error code

CJ

LED indications

The table below shows the LED indications.

Operation	HAP (green)	HBP (green)
Normal	☀	☀
Malfunctioning	☀	☀

3

Error generation

The error is generated when the remote control thermistor becomes disconnected or shorted while the unit is running.

Even if the remote control thermistor is malfunctioning, the system can operate with the system thermistor.

Causes

The possible causes are:

- Malfunctioning thermistor
- Broken wire.

Troubleshooting

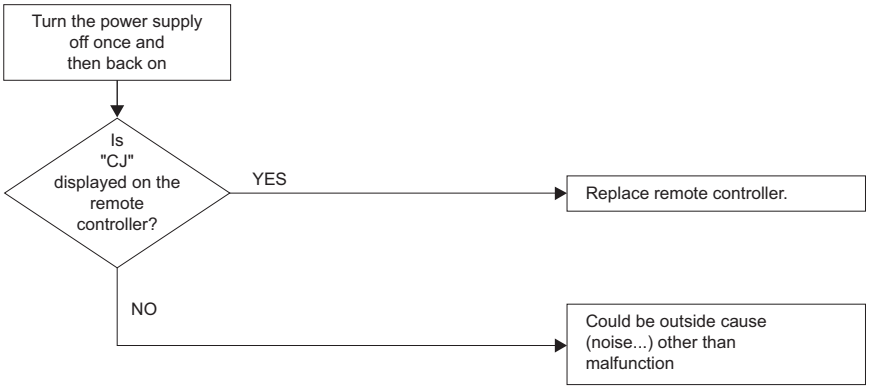

Caution

Be sure to turn off power switch before connect or disconnect connector, or parts damage may be occurred.

2.9 Malfunctioning of Moisture Sensor System (CC)

Remote controller display

CC

Applicable models

FCQ-D

Method of malfunction detection

Even if a malfunction occurs, operation still continues.
Malfunction is detected according to the moisture (output voltage) detected by the moisture sensor.

Malfunction decision conditions

When the moisture sensor is disconnected or short-circuited

Supposed causes

- Faulty sensor
- Disconnection

Troubleshooting

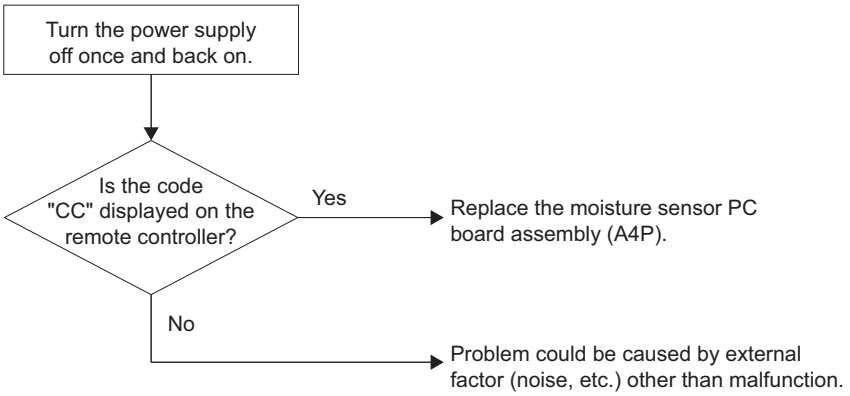

Caution

Be sure to turn off power switch before connect or disconnect connector, or parts damage may be occurred.

3

Part 4
Commissioning and Test Run

What is in this part? This part contains the following chapters:

Chapter	See page
2–Pre-Test Run Checks	4–11
3–Field Settings	4–17
4–Test Run and Operation Data	4–31

1 Error Codes: System Malfunctions

1.1 What Is in This Chapter?

Introduction

In the first stage of the troubleshooting sequence, it is important to correctly interpret the error code on the remote control display. The error code helps you to find the cause of the problem.

Overview

This chapter contains the following topics:

Topic	See page
1.2–Malfunction of Transmission between Indoor and Outdoor Unit (U4 or UF)	3–4
1.3–Malfunction of Transmission between Indoor Unit and remote control (U5)	3–6
1.4–Malfunction of Transmission between MAIN remote control and SUB remote control (U8)	3–7
1.5–Malfunctioning Field Setting Switch (UA)	3–8
1.6–Centralized Address Setting Error (UC)	3–10

1.2 Malfunction of Transmission between Indoor and Outdoor Unit (U4 or UF)

Error code

U4 or UF

Error generation

The error is generated when the microprocessor detects that the transmission between the indoor and the outdoor unit is not normal over a certain amount of time.

Causes

The possible causes are:

- Wiring indoor-outdoor transmission wire is incorrect
- Malfunctioning indoor unit PCB
- Malfunctioning outdoor unit PCB
- Outside cause (noise...).

3

Troubleshooting 1

Diagnosis of incorrect or broken/disconnected wiring. If the LEDs on the indoor unit PC board are off, it indicates that the transmission wiring between indoor and outdoor units may be incorrect or broken/disconnected.

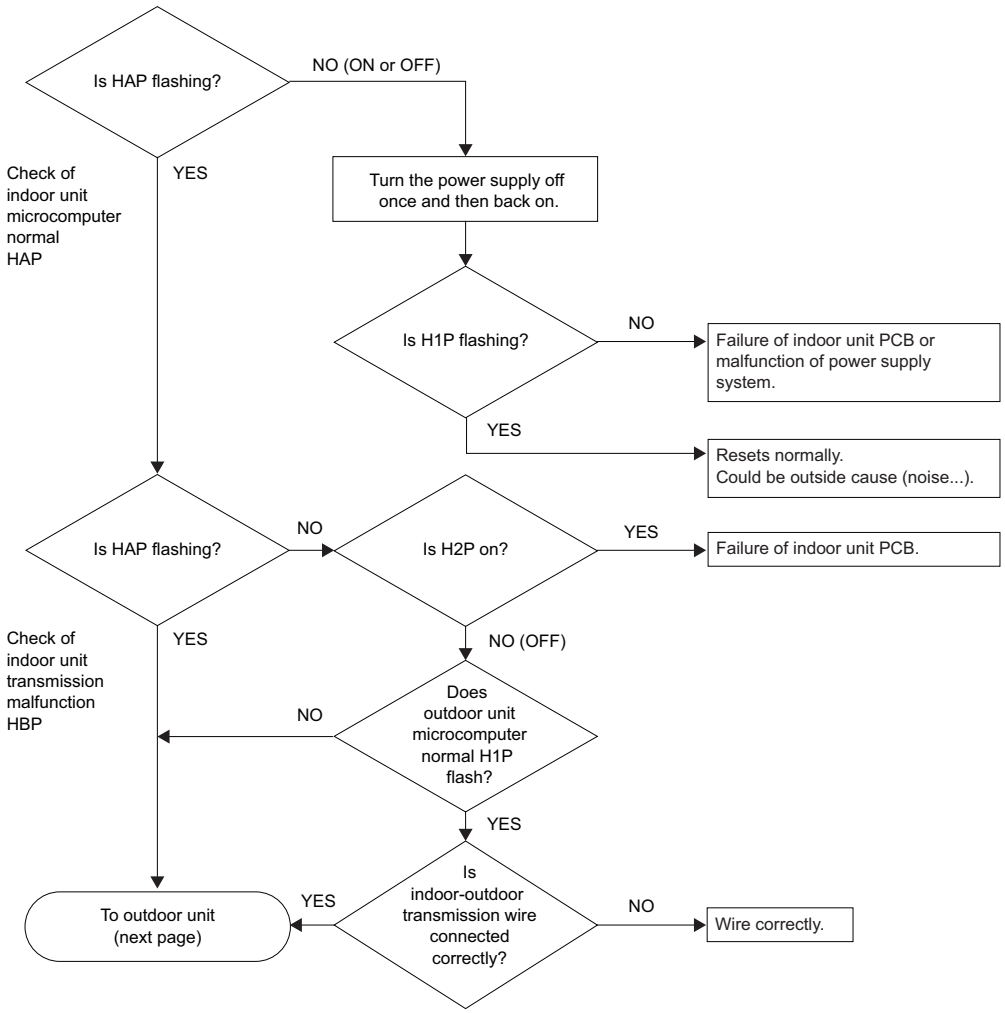

Caution

Be sure to turn off power switch before connect or disconnect connector, or parts damage may be occurred.

Troubleshooting 2

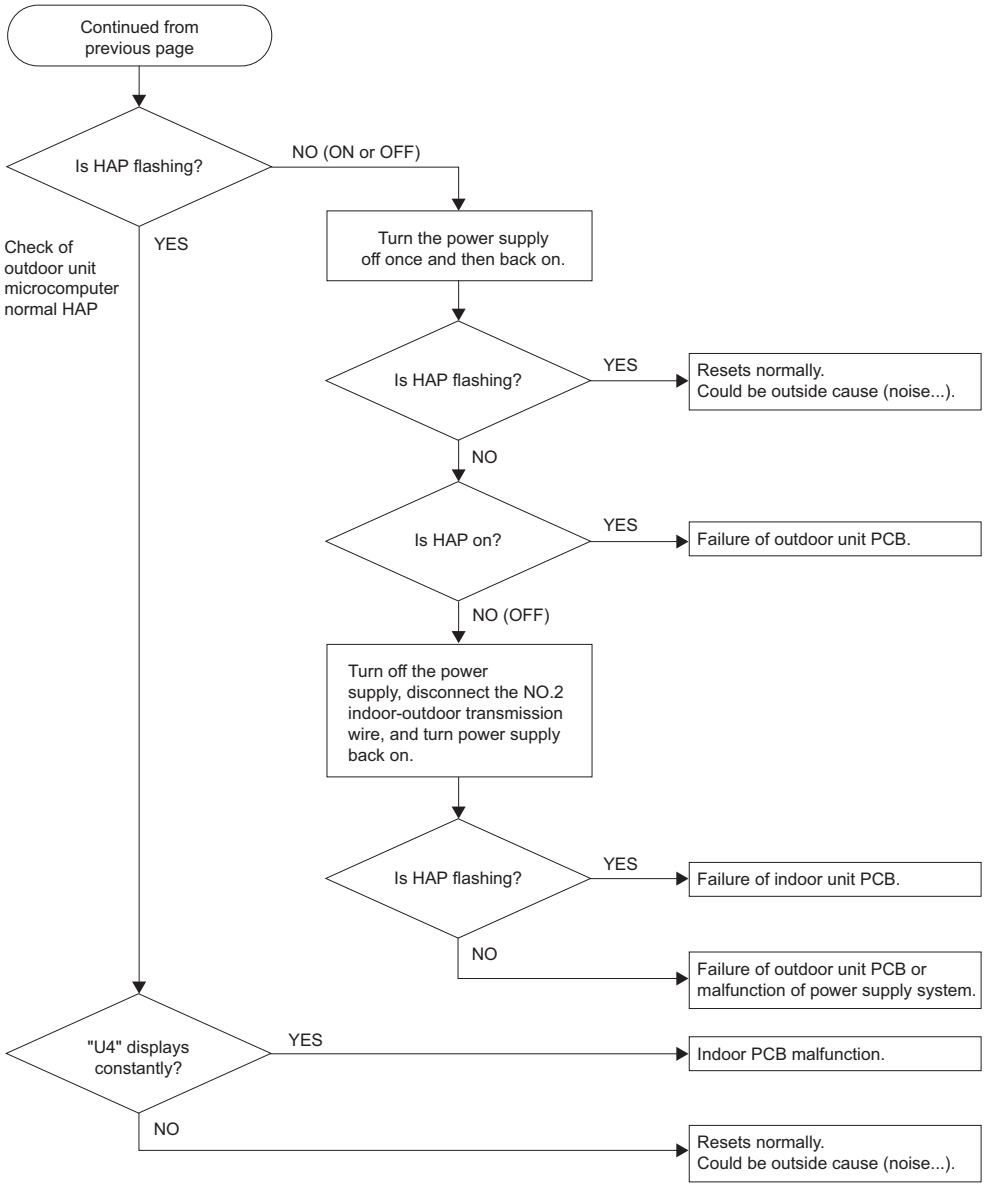

Caution

Be sure to turn off power switch before connect or disconnect connector, or parts damage may be occurred.

1.3 Malfunction of Transmission between Indoor Unit and remote control (U5)

Error code

U5

Error generation

The error is generated when the microprocessor detects that the transmission between the indoor unit and the remote control is not normal over a certain amount of time.

Causes

The possible causes are:

- Malfunctioning remote control
- Malfunctioning indoor PCB
- Outside cause (noise...)
- Connection of two master remote controls (when using two remote controls).

3

Troubleshooting

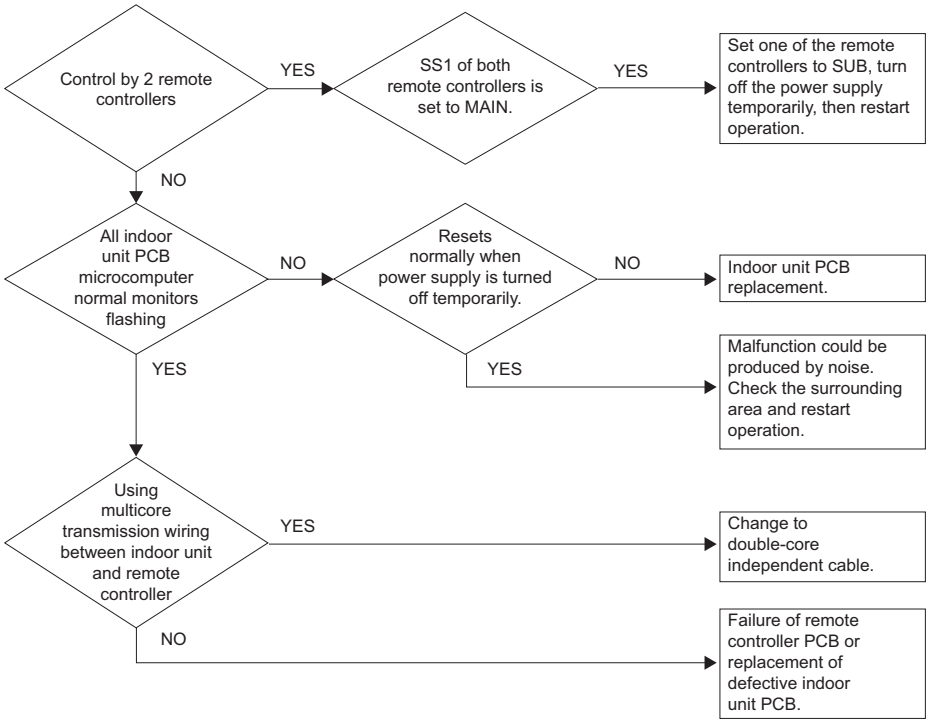

Caution

Be sure to turn off power switch before connect or disconnect connector, or parts damage may be occurred.

1.4 Malfunction of Transmission between MAIN remote control and SUB remote control (U8)

Error code

U8

Error generation

The error is generated when, in case of controlling with two remote controls, the microprocessor detects that the transmission between the indoor unit and the remote controls (MAIN and SUB) is not normal over a certain amount of time.

Causes

The possible causes are:

- Transmission error between MAIN remote control and SUB remote control
- Connection among SUB remote controls
- Malfunctioning remote control PCB.

Troubleshooting

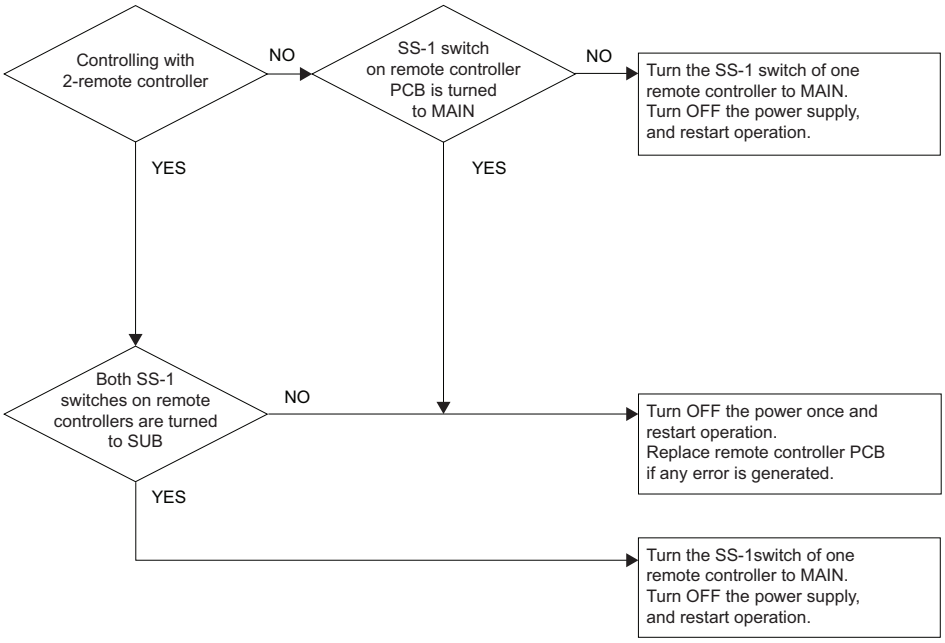

Caution

Be sure to turn off power switch before connect or disconnect connector, or parts damage may be occurred.

1.5 Malfunctioning Field Setting Switch (UA)

Error code

UA

Error generation

The error is generated when incorrect field settings have been set for pair/twin/triple/double twin.

Causes

The possible causes are:

- Malfunctioning indoor or outdoor unit PCB
- Malfunctioning power supply PCB
- Indoor-outdoor, indoor-indoor unit transmission wiring
- Malfunctioning remote control wiring.

3

Troubleshooting

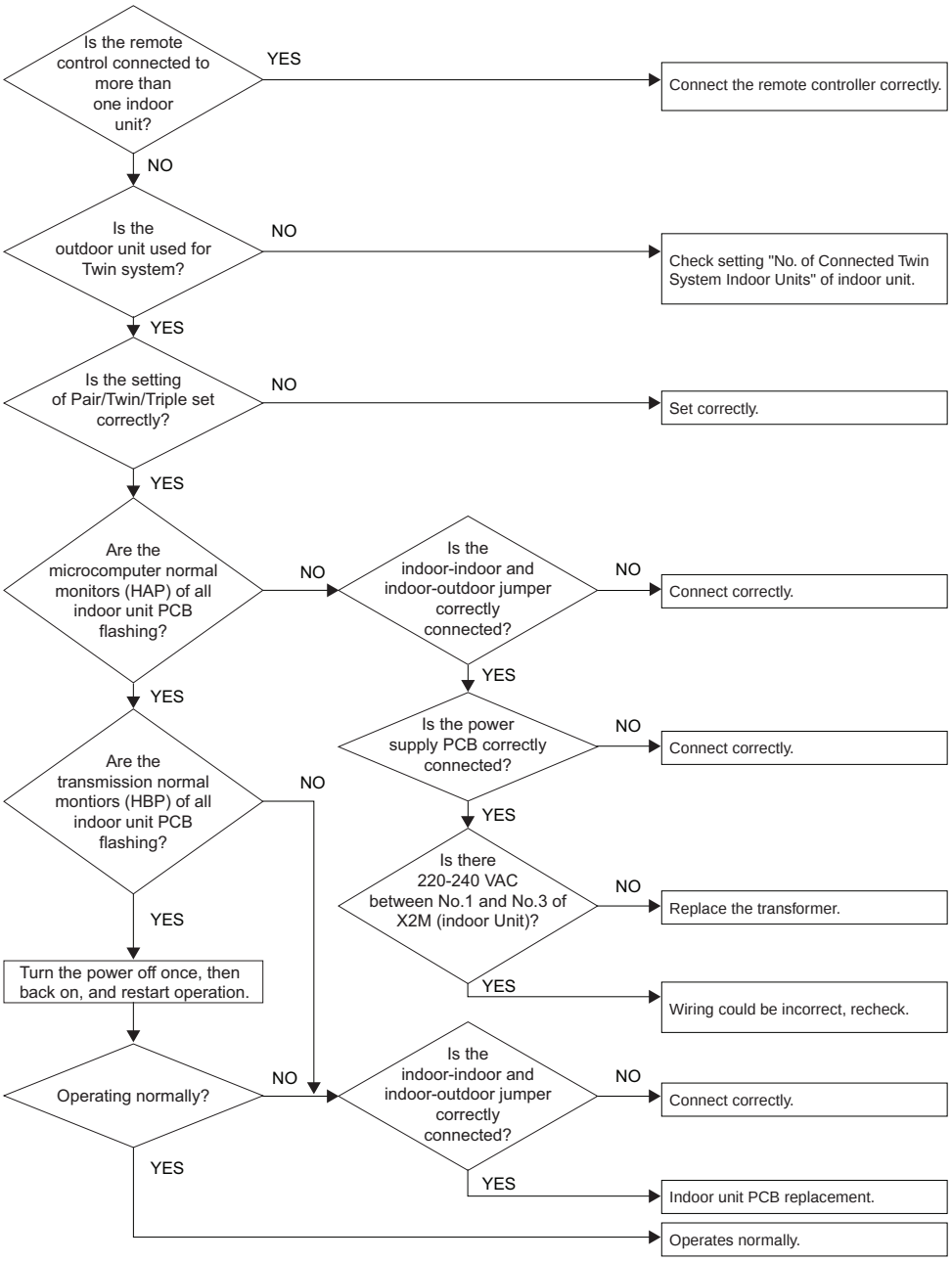

Caution

Be sure to turn off power switch before connect or disconnect connector, or parts damage may be occurred.

1.6 Centralized Address Setting Error (UC)

remote control Display

UC

Applicable Models

All indoor unit models

Method of Malfunction Detection

Indoor unit microcomputer detects and judges the centralized address signal according to the transmission between indoor units.

3

Malfunction Decision Conditions

When the microcomputer judges that the centralized address signal is duplicated

Supposed Causes

- Faulty centralized address setting
- Faulty indoor unit PC board

Troubleshooting

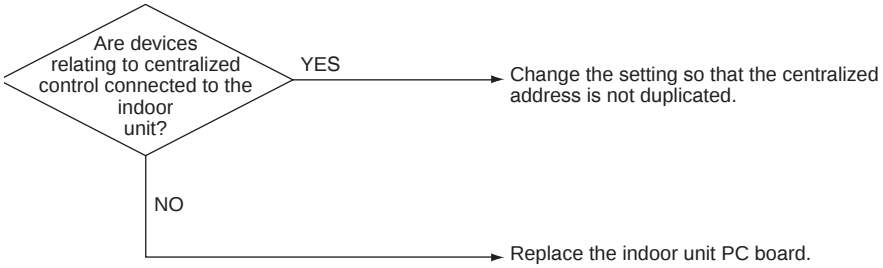

Caution

Be sure to turn off power switch before connect or disconnect connector, or parts damage may be occurred.

2 Pre-Test Run Checks

2.1 What Is in This Chapter?

Introduction

This chapter contains the following information:

- Checks before test run
- Test run checks
- Setting the address for the receiver of the infrared remote control
- Setting the address for the infrared remote control

Overview

This chapter contains the following topics:

Topic	See page
2.2–Test Run Checks	4–12
2.3–Setting the infrared remote control	4–13

2.2 Test Run Checks

Checks before test run

Before carrying out a test run, proceed as follows:

Step	Action
1	Make sure the voltage at the primary side of the safety breaker is: ■ 230 V ± 10%
2	Fully open the liquid and the gas stop valve.

Test run checks

To carry out a test run, check the following:

- Check that the temperature setting of the remote control is at the lowest level in cooling mode or use test mode.
- Go through the following checklist:

Checkpoints	Cautions or warnings
Are all units securely installed?	■ Dangerous for turning over during storm. ■ Possible damage to pipe connections.
Is the earth wire installed according to the applicable local standard?	Dangerous if electric leakage occurs.
Are all air inlets and outlets of the indoor and outdoor units unobstructed?	■ Poor cooling. ■ Poor heating.
Does the drain flow out smoothly?	Water leakage.
Is piping adequately heat-insulated?	Water leakage.
Have the connections been checked for gas leakage?	■ Poor cooling. ■ Poor heating. ■ Stop.
Is the supply voltage conform to the specifications on the name plate?	Incorrect operation.
Are the cable sizes as specified and according to local regulations?	Damage of cables.
Are the remote control signals received by the unit?	No operation.

2.3 Setting the infrared remote control

Introduction

To set the infrared remote control, you have to set the address for:

- The receiver of the infrared remote control
- The infrared remote control.

Setting the address for the receiver

The address for the receiver of the infrared remote control is factory set to 1. To change this setting, proceed as follows:

Step	Action
1	Turn OFF the power.
2	Remove the sealing pad on the top of the receiver. 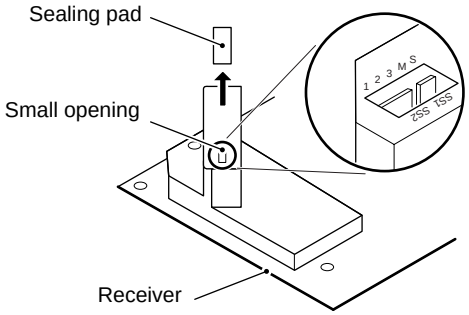
3	Set the wireless address switch (SS2) according to the table below. You can find the wireless address switch attached on the PCB of the receiver and it is visible through the small opening on the back of the receiver. **Unit No.** / No. 1 / No. 2 / No. 3 **SS2** / 1 2 3 / 1 2 3 / 1 2 3
4	If you use a wired and a infrared remote control for one indoor unit, proceed as follows: 1. Set the wired remote control to MAIN: On the remote control. 2. Set the infrared remote control to SUB: On the receiver with the MAIN/SUB switch (SS1). **MAIN/SUB** / MAIN / SUB **SS1** / S M / S M
5	Seal off the opening of the address switch and the MAIN/SUB switch with the attached sealing pad. 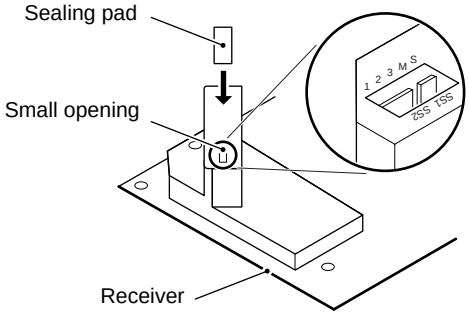
6	Make sure to also change the address on the remote control.

Setting the address for the infrared remote control

The address for the infrared remote control is factory set to 1. To change this setting, proceed as follows:

Step	Action
1	Hold down the FILTER RESET button and the TEST button for at least 4 s, to go to field set mode. The display indicates the field set mode. 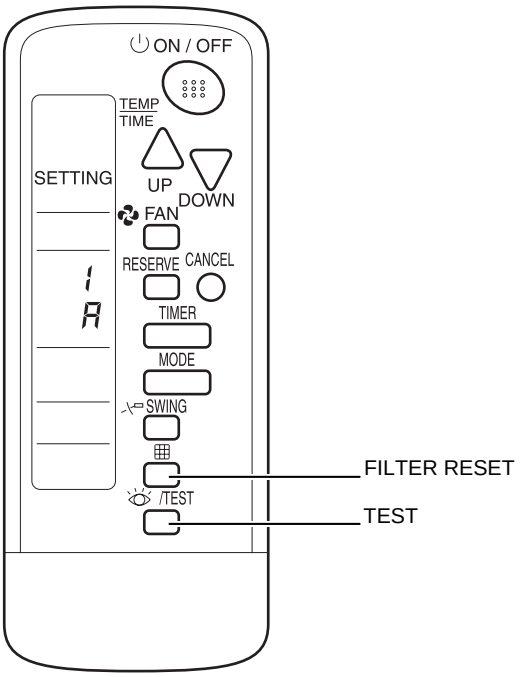
2	Press the FAN button to select a multiple setting (A/b), see ‘Multiple settings A/b’ further in this section. Each time you press the button, the display switches between “A” and “b”. 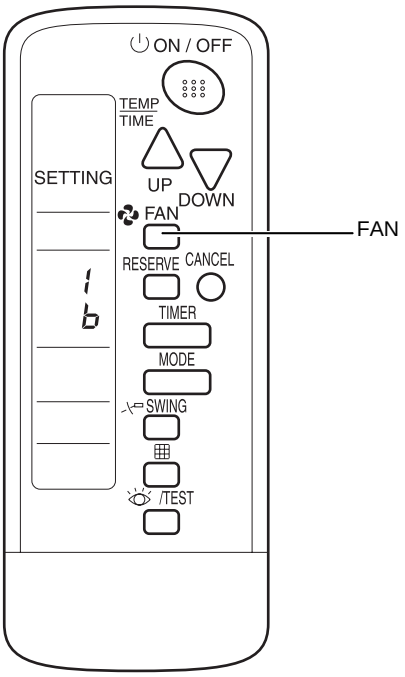

Step	Action
3	Press the UP and DOWN buttons to set the address. Set the same address as the receiver (1, 2 or 3). The receiver does not work with addresses 4, 5 and 6. 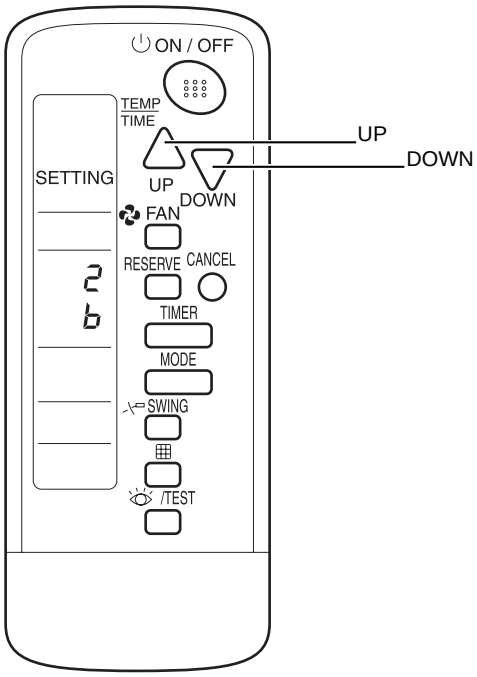
4	Press the RESERVE button to confirm the setting. 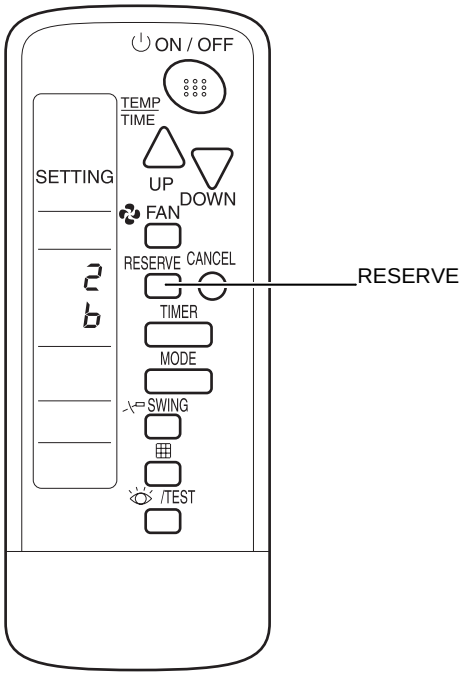

4

Step	Action
5	Press the TEST button to quit the field set mode and return to the normal display. 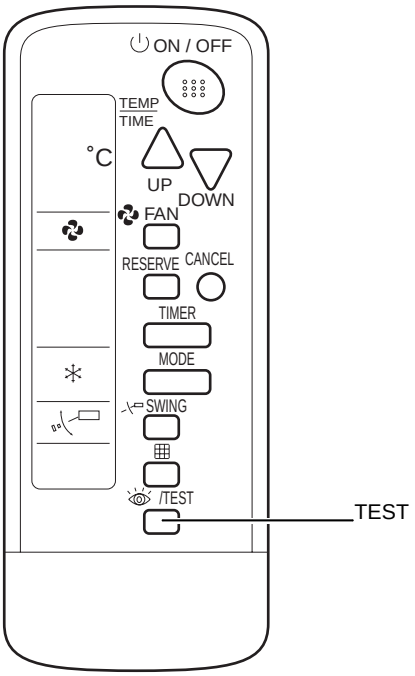

4

Multiple settings A/b

When an outside control (central remote control...) controls an indoor unit, sometimes the indoor unit does not respond to ON/OFF and temperature settings commands from this controller.

remote control		Indoor unit	
Setting	**remote control display**	**Control of other air conditioners and units**	**No other control**
A: Standard	All items are displayed.	Commands other than ON/OFF and temperature setting accepted. (1 long beep or 3 short beeps emitted)	
b: Multi System	Only one item is displayed. This item is only shown for a few seconds.	All commands accepted (2 short beeps)	

3 Field Settings

3.1 What Is in This Chapter?

Introduction

This chapter contains the following information:

- How to change the field settings
- The field settings
- The factory settings.

Overview

This chapter contains the following topics:

Topic	See page
3.2–How to Change the Field Settings with the Wired remote control	4–18
3.3–How to Change the Field Settings with the infrared remote control	4–20
3.4–Overview of the Field Settings on the Indoor Units	4–21
3.5–Overview of the Factory Settings on the Indoor Units	4–22
3.6–Setting the Ceiling Height	4–23
3.7–Setting the Filter Counter	4–24
3.8–MAIN/SUB Setting when Using Two remote controls	4–26
3.9–Setting the Centralized Group No.	4–27
3.10–The Field Setting Levels	4–28

3.2 How to Change the Field Settings with the Wired remote control

Installation conditions

The field settings have to be changed with the remote control according to the installation conditions.

Wired remote control

The illustration below shows the wired remote control.

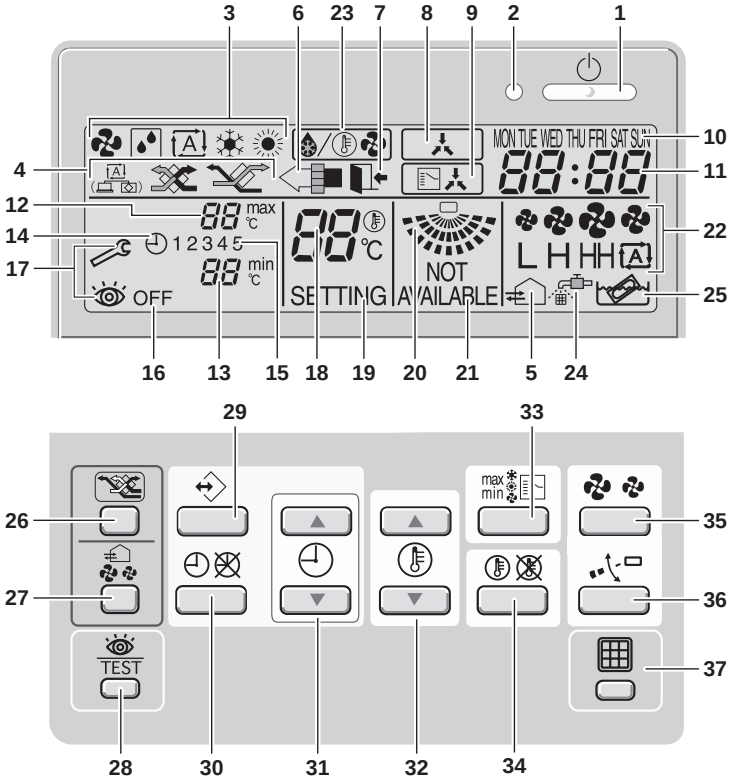

Components

The table below contains the components of the wired remote control.

No.	Component	No.	Component
1	ON/OFF button	20	Air flow direction icon
2	Operation lamp	21	Not available
3	Operation mode icon	22	Fan speed icon
4	Ventilation mode icon	23	Defrost/hotstart mode icon
5	Ventilation icon	24	Air filter cleaning time icon
6	Air cleaning icon	25	Element cleaning time icon
7	Leave home icon	26	Ventilation mode button
8	External control icon	27	Ventilation amount button
9	Change-over under centralised control icon	28	Inspection/test operation button
10	Day of the week indicator	29	Programming button
11	Clock display	30	Schedule timer button
12	Maximum set temperature	31	Time adjust button
13	Minimum set temperature	32	Temperature adjust buttons
14	Schedule timer icon	33	Operation change/ button
15	Action icons	34	Setpoint/limit button
16	Off icon	35	Fan speed button
17	Inspection required	36	Air flow direction adjust button
18	Set temperature display	37	Air filter cleaning time icon reset
19	Setting		

Setting

To set the field settings, you have to change:

- “Mode No.”
- “First code No.”
- “Second code No.”.

To change the field settings, proceed as follows:

Step	Action
1	Hold down the INSPECTION/TEST button for at least 4 s during normal mode to enter the “Field setting mode”.
2	Press the TEMPERATURE CONTROL button until the desired “Mode No.” appears.
3	■ If the indoor unit is under group control, all settings for all the indoor units are set at the same time. Use the codes 10 to 15 to apply this group control and proceed to the next step. ■ If you want to set the indoor units of one group individually or if you want to read out the last settings, use the codes 20 to 25 which are displayed in brackets. Press the TIMER SELECTION button to select the “Indoor unit No.” for which you want to adjust the field settings.
4	Press the upper part of the PROGRAMMING TIME button to select the “First code No.”.
5	Press the lower part of the PROGRAMMING TIME button to select the “Second code No”.
6	Press the CONFIRMATION button to confirm the changed setting.
7	Press the INSPECTION/TEST button to return to “Normal mode”.

3.3 How to Change the Field Settings with the infrared remote control

Optional accessories

If optional accessories are mounted on the indoor unit, the indoor unit setting may have to be changed.

Refer to OH98-2 or the installation manual (optional handbook) for each optional accessory.

infrared remote control

The illustration below shows the infrared remote control.

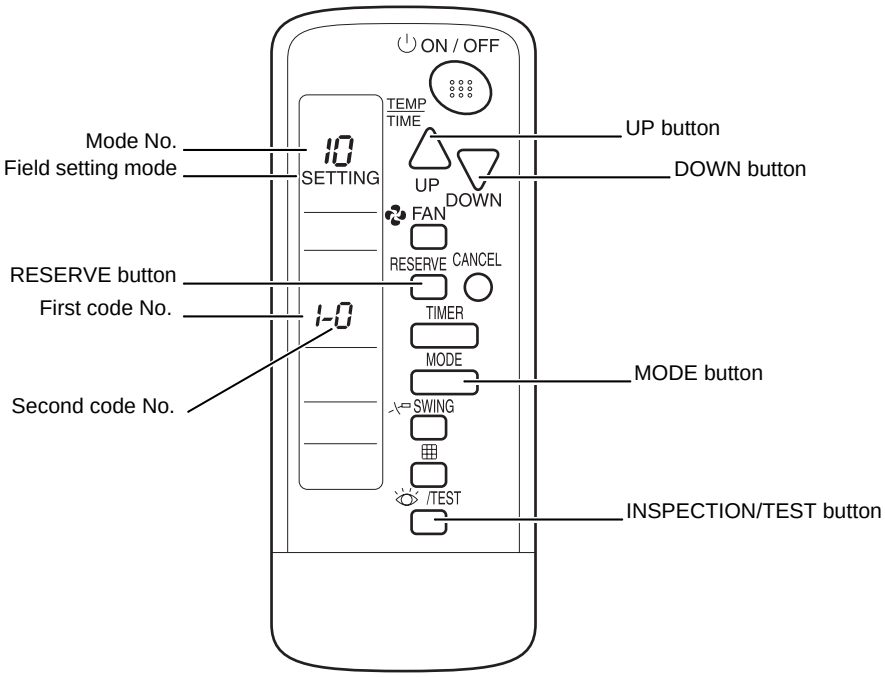

Setting

To set the field settings, you have to change:

- “Mode No.”
- “First code No.”
- “Second code No.”.

To change the field settings, proceed as follows:

Step	Action
1	Hold down the INSPECTION/TEST button for at least 4 s during normal mode to enter the “Field setting mode”.
2	Press the MODE button to select the desired “Mode No.”.
3	Press the UP button to select the “First code No.”.
4	Press the DOWN button to select the “Second code No.”
5	Press the RESERVE button to set the present settings.
6	Press the INSPECTION/TEST button to return to the “Normal mode”.

3.4 Overview of the Field Settings on the Indoor Units

Field settings The table below contains the possible field settings of all indoor units.

Mode No.	First code No.	Description of the setting	Second code No.			
			01	02	03	04
10 or 20	0	Filter counter	Light contamination	heavy contamination	—	—
	1	Filter type	Long	Super long	External	Oil mist
	2	Remote thermistor of the remote control	TH1 = rem. controller	TH1 = air return	—	—
	3	Filter display	Filter indic.	No filter indic.	—	—
11 or 21	0	Number indoor to 1 outdoor	Pair	Twin	Triple	Double twin
	1	Unified or indiv. set twin	Group setting	Indiv. setting	—	—
	2	Fan OFF at thermostat OFF	LL-speed	OFF	—	—
12 or 22	0	KRP1B51/52/53 X1/X2 output	Thermostat ON	Option	Operation	Malfunction
	1	EKRORO	Forced OFF	ON/OFF operation	—	—
	3	Fan speed heating thermostat OFF	LL-speed	Set speed	Continuously OFF	—
	5	Automatic restart	Disabled	Enabled	—	—
13 or 23	0	Ceiling height setting	Normal	High	Extra high	—
			≤ 2.7 m	>2.7≤3.0 m	>3.0≤3.5 m	—
	1	Selection of air flow direction (setting for when a blocking pad kit has been inst alled).	4-way flow	3-way flow	2-way flow	—
	3	Horizontal discharge grill	Enabled	Disabled	—	—
	4	Air flow direction adjust range setting	Draft prevention	Standard	Ceil soil prevention	—
	5	Field fan speed changeover air outlet (domestic only)	Standard	Option 1	Option 2	—
	6	External static pressure	Normal	High	Low	—
14 or 24	0	Additional timer to guard timer	0 s	5 s	10 s	15 s
1b (Only in case of BRC1D52)	0	Permission level setting	Level 2	Level 3	—	—
	1	Leave home function	Not permitted	Permitted	—	—
	2	Thermostat sensor in remote control (for limit operation and leave home function only)	Use	Not use	—	—

4

3.5 Overview of the Factory Settings on the Indoor Units

Factory settings The table below contains the factory settings of all indoor units

Mode No.	First code No.	Second code No.						
		FCQ	FFQ	FBQ	FAQ	FDQ, FEDQ	FUQ	FHQ
10 or 20	0	01	01	01	01	01	01	01
	1	01	01	01	—	02	01	—
	2	02	02	02	—	02	02	02
	3	01	01	01	01	01	01	01
11 or 21	0	01	01	01	01	01	01	01
	1	01	01	01	01	01	01	01
	2	01	01	01	01	01	01	01
12 or 22	0	01	01	01	01	01	01	01
	3	01	01	01	—	—	—	—
	5	02	02	02	02	02	02	02
13 or 23	0	01	—	—	01	—	01	01
	1	01	01	—	—	—	—	—
	3	—	—	—	—	—	—	—
	4	02	02	—	—	—	—	—
	5	01	01	—	01	—	01	01
	6	—	—	01	—	—	—	—
14 or 24	0	01	01	01	—	01	01	01

4

3.6 Setting the Ceiling Height

Incorrectly setting

If you set the controller incorrectly, a connection mistake malfunction “UA” will appear on the remote control display.

See ’Malfunctioning Field Setting Switch (UA)’ on page 3–8.

Mode No. 13 or 23
First code No. 0

Set the second code No., according to the tables below.

FHQ

Second code No.	Ceiling-suspended type
01	Height < 2.7 m
02	2.7 m < height < 3.5 m
03	Not used

FAQ

Second code No.	Wall-mounted type
01	Normal
02	High
03	Extra high

FCQ and FUQ

Indoor unit	Second code No.	4-way outlet	3-way outlet	2-way outlet
FCQ35-71	01	< 2.7 m	< 3.0 m	< 3.5 m
	02	< 3.0 m	< 3.3 m	< 3.8 m
	03	< 3.5 m	< 3.5 m	—
FCQ100-125-140	01	< 3.2 m	< 3.6 m	< 4.2 m
	02	< 3.6 m	< 4.0 m	< 4.2 m
	03	< 4.2 m	< 4.2 m	—
FUQ	01	< 2.7 m	< 3.0 m	< 3.5 m
	02	< 3.0 m	< 3.5 m	< 3.8 m
	03	< 3.5 m	< 3.8 m	—

3.7 Setting the Filter Counter

Mode No. 10 or 20
First code No. 0

When the filter counter indication time is set to ON, set the second code No., according to the table below

Unit	Mode No.	First code No.	Second code No.	Contamination
			01 light	02 heavy
FCQ	10 or 20	0	±2500 hrs	±1250 hrs
FFQ			±2500 hrs	±1250 hrs
FHQ			±2500 hrs	±1250 hrs
FUQ			±2500 hrs	±1250 hrs
FAQ			±200 hrs	±100 hrs
FBQ			±2500 hrs	±1250 hrs
FDQ, FDEQ			±2500 hrs	±1250 hrs

4

Fan speed setting at thermostat OFF

When the cool/heat thermostat is OFF, you can stop the indoor unit fan by switching the setting to “Fan OFF”. This setting is used as a countermeasure against odour, for example for barber shops and restaurants.

You can switch the fan speed to the set fan speed when the heating thermostat is OFF. This setting is called “Set Fan Speed” . Default the fan speed is set LL to prevent cold draft.
Note: That a combination of modes 11 (21) and 12 (22) is required to enable following settings:

Mode No. - First code No.		Second code No.		
12 (22) - 3 12 (21) - 2		01	02	03
Second code No.	01	Cool: Set Speed Head: LL Speed	Cool: Set Speed Head: Set Speed	Cool: Set Speed Head: Continu-ously OFF
	02	Cool: OFF + moni-toring at set speed Heat: OFF + moni-toring at LL speed	Cool: OFF + moni-toring at set speed Heat: Set speed	Cool: OFF +moni-toring at set speed Heat: OFF + moni-toring at OFF

Note: Monitoring mode

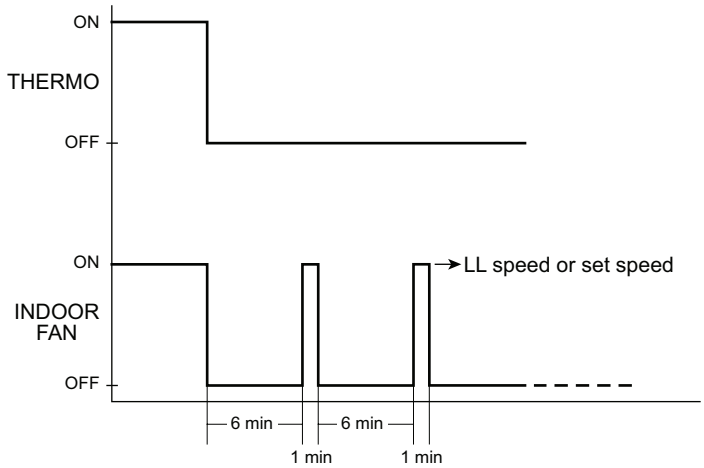

Air flow direction setting

Set the air flow direction of the indoor units as given in the table below. This setting is needed when the optional air outlet blocking pad has been installed. The “Second code No” is factory set to “01”.

Mode No	First code No	Second code No	Setting
13 or 23	1	01	F: four-direction air flow
		02	T: three-direction air flow
		03	W: two direction air flow

3.8 MAIN/SUB Setting when Using Two remote controls

Situation

The MAIN/SUB setting is necessary when one indoor unit is controlled by two remote controls. When you use two remote controls (control panel and separate remote control), set one to MAIN and the other to SUB. You can do this by setting the switch on the remote control's PCB.

Setting

The remote controls are factory set to MAIN, so you only have to change one remote control from MAIN to SUB. To change a remote control from MAIN to SUB, proceed as follows:

Step	Action
1	Insert a flathead screwdriver into the recess between the upper and lower part of the remote control, as shown in the illustration below. Gently pry off the upper part of the controller, working from the two possible positions. 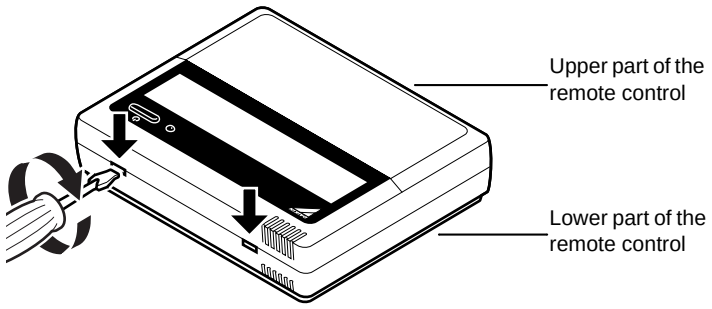
2	Turn the MAIN/SUB changeover switch on the PCB to "S". 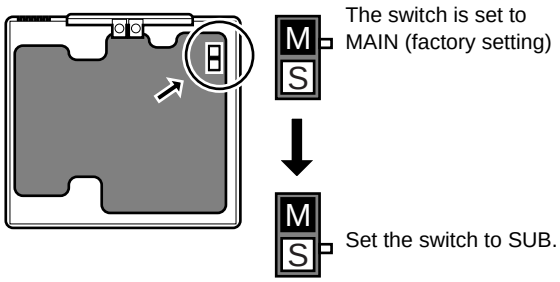

3.9 Setting the Centralized Group No.

When?

If you want to carry out centralized control with a central remote control and a unified ON/OFF controller, you have to set the group No. for each group with the remote control.

Wired remote control

The illustration below shows the wired remote control.

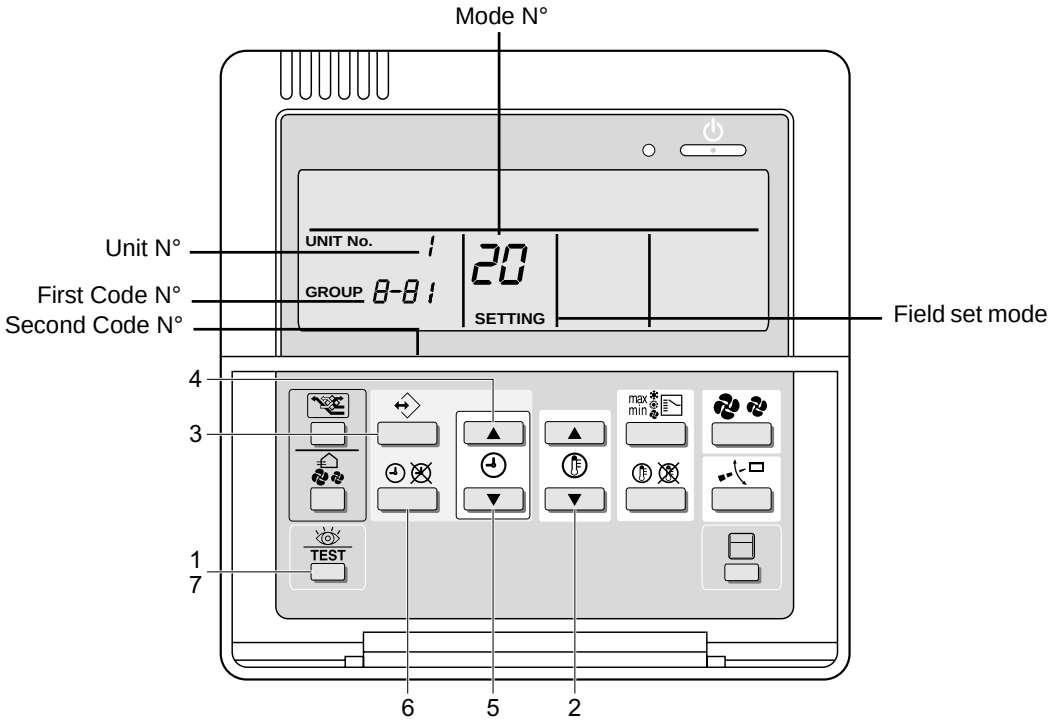

Setting

To set the “Centralized group No.”, proceed as follows:

Step	Action
1	Switch ON the power supply of the central remote control, the unified ON/OFF controller and the indoor unit(s).
2	Hold down the INSPECTION/TEST button for at least 4 s during normal mode to enter the “Field setting mode”.
3	Press the TEMPERATURE CONTROL button until “Mode No.” “00” appears.
4	Press the INSPECTION/TEST button to inspect the group No. display.
5	Set the “Group No.” for each group by pressing the PROGRAMMING TIME button. The “Group No.” rises in the order of 1—00, 1—01, ..., 1—15, 2—00, ..., 2—15, 3—00, etc. The unified ON/OFF controller however displays only the range of group numbers selected by the switch for setting each address.
6	Press the CONFIRMATION button to enter the selected group No.
7	Press the INSPECTION/TEST button to return to normal mode.

Individually address setting

If the address must be set individually for each unit, set the “Mode No.” to “30”. For example, for power consumption counting.

3.10 The Field Setting Levels

Introduction

The three field setting levels are:

- Inspection level
- Monitoring level
- Maintenance mode settings.

The inspection level

The inspection level is the highest level of the three field setting levels. You can change the views in the inspection level by pressing the INSPECTION/TEST button.

The flow chart below explains the different windows of the inspection level.

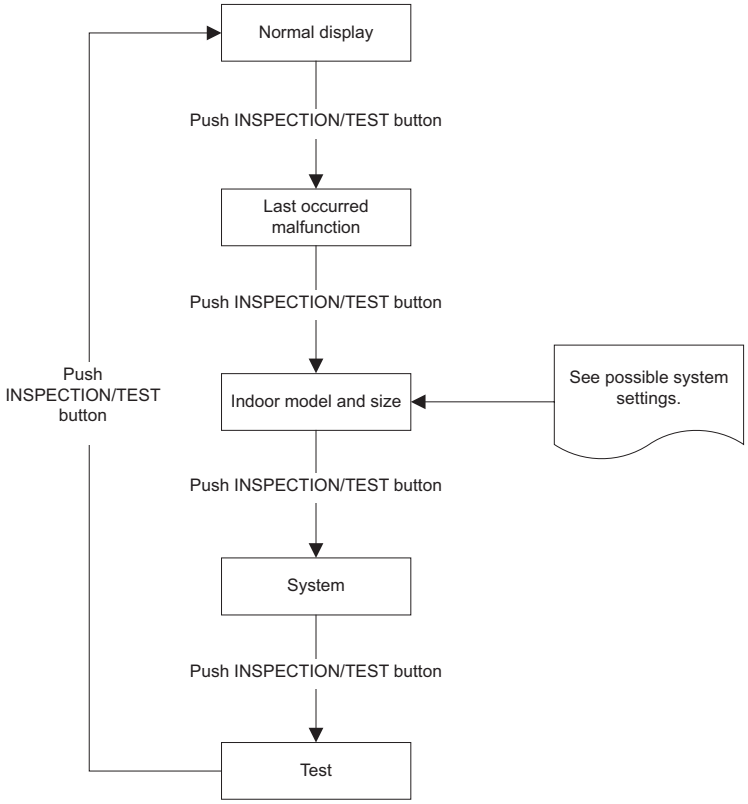

Possible system settings

The table below contains the possible system settings, which are displayed on the remote control if the TEST button is pushed twice shortly.

Size		Software	Type	
Settings	**Display**		**Settings**	**Display**
35	35	5	FCQ	FJ
45	45		FHQ	HJ
60	63		FAQ	AJ
71	71		FFQ	GJ
100	100		FBQ	JJ
125	125		FUQ	3J
200	200		FDQ, FDEQ	UJ
250	250		—	

Changing the mode settings

To enter the monitoring level and to change the maintenance mode settings, proceed as follows:

Step	Action
1	Hold down the INSPECTION/TEST button for at least 4 s to enter the field setting mode.
2	Hold down the INSPECTION/TEST button for at least 4 s to enter the maintenance mode.
3	Press the TEMPERATURE CONTROL buttons as many times as needed to select the mode No. you want.
4	Press the TIMER SELECTION button as many times as needed to select the unit No. you want.
5	Carry out the settings for modes 44 and 45. See “Maintenance Mode Settings” further in this section.
6	Press the CONFIRMATION button to confirm the settings of modes 44 and 45.
7	Press the INSPECTION/TEST button to return to the normal operating mode.

Maintenance Mode Settings

The table below describes the maintenance mode settings.

Mode No.	Function	Content and operation method	Example of the remote control display
40	History error codes	Display malfunction history The history No. can be changed with the programming time button.	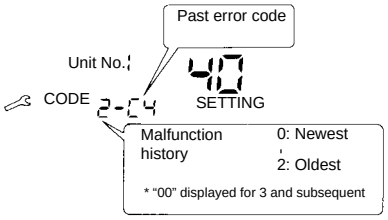
41	Thermistor data display	Select the display thermistor with the programming time button. Thermistor: 0. Remote control thermistor 1. Suction thermistor 2. Heat exchanger thermistor.	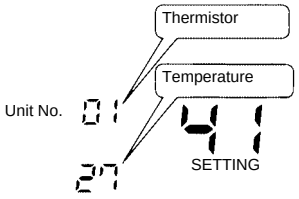
43	Forced fan ON	Turns the fan ON for each unit individually.	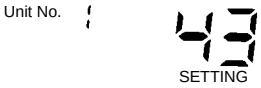
44	Individual setting	Sets fan speed and air flow direction for each unit individually when using group control. Settings are made using the "air flow direction adjust" and "fan speed adjust" buttons. Confirmation by the confirmation button is required.	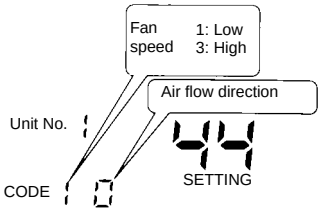
45	Unit No. change	Changes unit No. Set the unit No. after changing with the programming time buttons. Confirmation by the confirmation button is required.	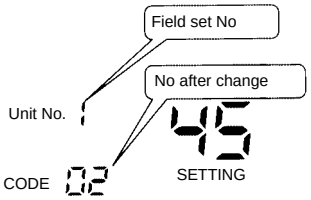

4

4 Test Run and Operation Data

Introduction

This chapter contains the following information:

- General operation data

Overview

This chapter contains the following topics:

Topic	See page
4.1–General Operation Data	4–32

4

4.1 General Operation Data

Guide Lines for Optimal Operation Condition

The operation value guide lines when operating under standard conditions **(at Rated frequency)** by pushing the test run button on the remote control are as given in the table below.

Indoor Unit Fan:

“H” Operation Compressor: Rated Frequency

	High Pressure (Mpa)	Low Pressure (Mpa)	Discharge Pipe Temperature (°C)	Suction Temperature (°C)	Indoor Unit Side: Differential Between Suction Temperature and Discharge Temperature (°C)	Outdoor Unit Side: Differential Between Suction Temperature and Discharge Temperature (°C)
Cooling	26 bar ~ 34 bar	6 bar ~ 10 bar	60~100	–2~10	8~18	7~12
Heating	25 bar ~ 32.6 bar	5.3 bar ~ 9.5 bar	60~100	–6~2	14~30	2~6

4

Standard Conditions

	Indoor Unit Conditions	Outdoor Unit Conditions
Cooling Operation	27°C DB/19°C WB	35°C DB
Heating Operation	20°C DB	7°C DB/6°C WB

During or after maintenance, when the power supply is turned back on, operation restarts automatically by the “auto restart function.” Please exercise the proper caution.

When perfoming maintenance, you should at least perform the following inspections:

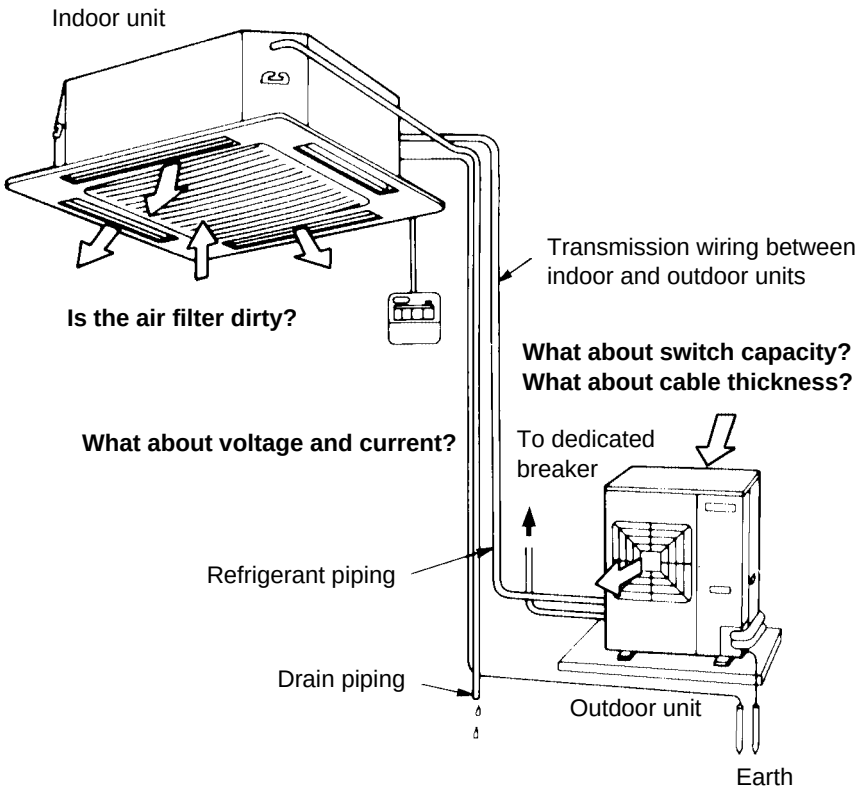

Correlation of Air-Conditioner's Operation Status and Pressure / Running Current

What happens in comparison to normal values is summarized in the table below.
(Measured from 15 ~ 20 minutes or more after operation starts.)

When Cooling

Air-Conditioner Status	Low Pressure	High Pressure	Running Current
Air Filter Fouling	Lower	Lower	Lower
Short Circuit of Indoor Unit Inlet/Outlet Air	Lower	Lower	Lower
Outdoor Unit Fin Fouling	Higher	Higher	Higher
Short Circuit of Outdoor Unit Inlet/Outlet Air	Higher	Higher	Higher
Air Mixed in Refrigerant	Higher	Higher	Higher
Water Mixed in Refrigerant	∗1 Lower	Lower	Lower
Dirt Mixed in Refrigerant	∗2 Lower	Lower	Lower
Lack of Refrigerant (Gas)	Lower	Lower	Lower
Unsatisfactory Compression	∗3 Higher	Lower	Lower

When Heating

Air-Conditioner Status	Low Pressure	High Pressure	Running Current
Air Filter Fouling	Higher	Higher	Higher
Short Circuit of Indoor Unit Inlet/Outlet Air	Higher	Higher	Higher
Outdoor Unit Fin Fouling	Lower	Lower	Lower
Short Circuit of Outdoor Unit Inlet/Outlet Air	Lower	Lower	Lower
Air Mixed in Refrigerant	Higher	Higher	Higher
Water Mixed in Refrigerant	∗1 Lower	Lower	Lower
Dirt Mixed in Refrigerant	∗2 Lower	Lower	Lower
Lack of Refrigerant (Gas)	Lower	Lower	Lower
Unsatisfactory Compression	∗3 Higher	Lower	Lower

Notes:

- ∗1. Water in the refrigerant freezes inside the capillary tube or expansion valve, and is basically the same phenomenon as pump down.
- ∗2. Dirt in the refrigerant clogs filters inside the piping, and is basically the same phenomenon as pump down.
- ∗3. Pressure differential between high and low pressure becomes low.

Part 5
Disassembly and Maintenance

What is in this part? This part contains the following chapters:

Chapter	See page
1–Disassembly and Maintenance	5–3

5

5

1 Disassembly and Maintenance

1.1 What Is in This Chapter?

Introduction

This chapter contains the following information on the indoor units:

- Exploded views
- Components
- Disassembly procedures

Exploded views and components

This chapter contains the following topics:

Topic	See page
1.2–FCQ35, 50, 60, 71B	5–4
1.3–FCQ100, 125B	5–6
1.4–FFQ25, 35, 50, 60B	5–8
1.5–FBQ35, 50B	5–10
1.6–FBQ60, 71B	5–12
1.7–FBQ100, 125B	5–14
1.8–FDQ125, 200, 250B	5–16
1.9–FDEQ71, 100B	5–18
1.10–FDEQ125B	5–20

Dissassembly procedures

This chapter contains the following topics

Topic	See page
1.11–FCQ71, 100, 125, 140D	5–22
1.12–FFQ25, 50, 60B	5–42
1.13–FHQ35, 50, 60, 71, 100, 125B	5–79
1.14–FUQ71, 100, 125B	5–94
1.15–FAQ71B	5–111
1.16–FAQ100B	5–122

5

1.2 FCQ35, 50, 60, 71B

Exploded view

The illustration below shows the exploded view.

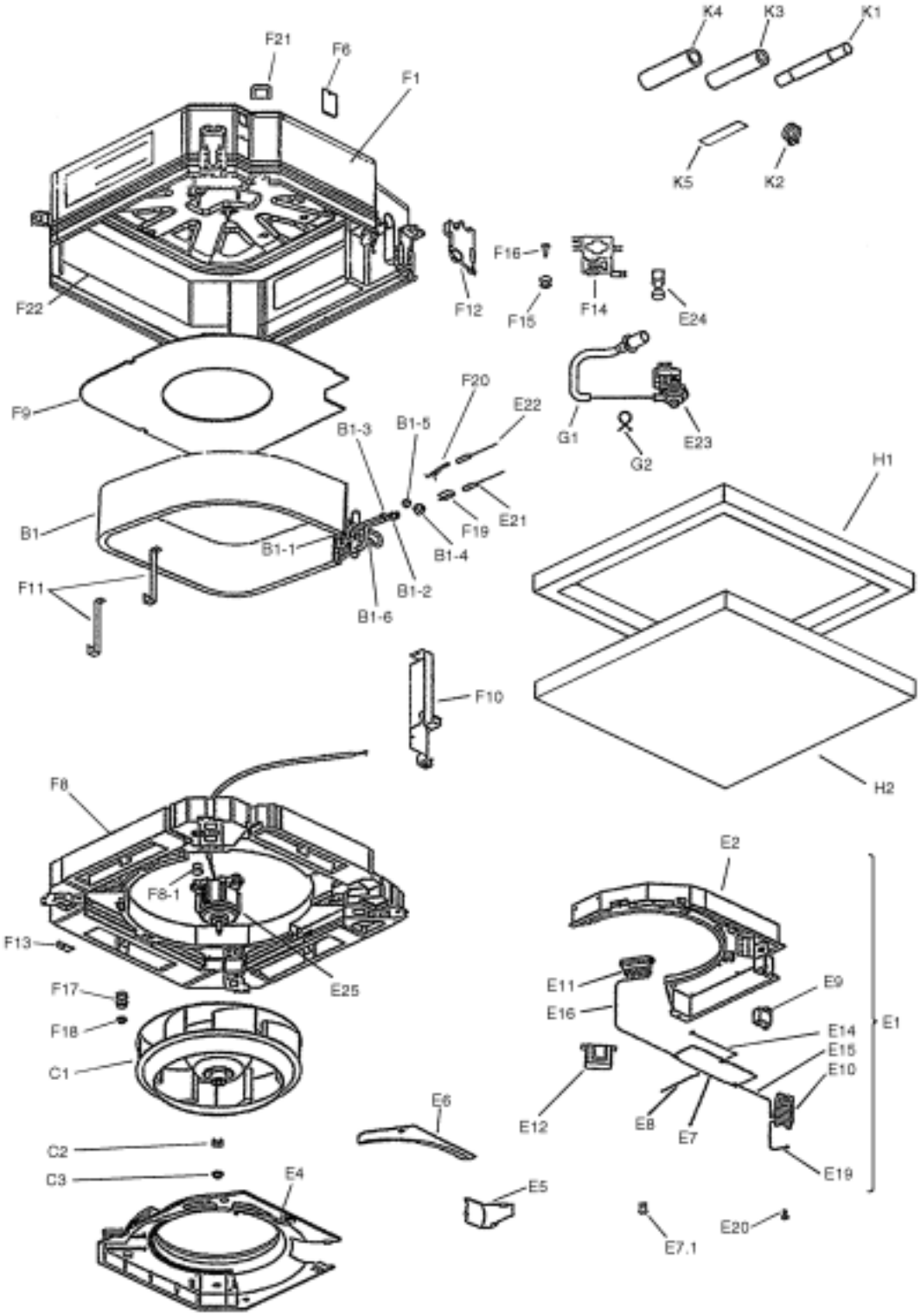

Components

The table below contains the components of the exploded view.

No.	Component	No.	Component
B1	Heat exchanger assy	E23	Drain pump
B1.1	Branch pipe (FCQ35)	E24	Float switch
B1.1	Distributor with filter	E25	Fan motor
B1.2	Single union joint	F1	Casing assy
B1.3	Single union joint	F6	Inspection cover assy
B1.4	Flare nut	F8	Drain pan assy
B1.5	Flare nut	F8.1	Drain plug
B1.6	Filter (not for FCQ71)	F9	Sound absorbing material
C1	Fan rotor (turbo)	F10	Heat exchanger blind plate assy
C2	Lock washer	F11	Heat exchanger mounting plate
C3	Nut with washer	F12	Hold plate assy
E1	Switch box assy	F13	Panel mounting plate
E2	Switch box body	F14	Drain pump mounting plate
E4	Bell mouth	F15	Vibration isolator
E5	Switch box cover assy 1	F16	Hexagon mounting bolt
E6	Switch box cover 2	F17	Vibration isolator
E7	PCB assy	F18	Nut with washer
E7.1	Capac.setting adapt. (not for FCQ71)	F19	Feeler bulb clamp
E8	Thermistor (Air)	F20	Thermistor fixing plate
E9	Capacitor	F21	Rubber bush
E10	Terminal	F22	Inner heat insulator
E11	Terminal block	G1	Drain hose
E12	Power supply transformer	G2	Hose band
E14	Wire harness	H1	Top tray assy
E15	Wire harness	H2	Bottom tray assy
E16	Wire harness	K1	Drain hose assy
E19	Earth wire	K2	Hose band
E20	Earth screw	K3	Insulation for joint (liquid)
E21	Thermistor (liquid)	K4	Insulation for joint (gas)
E22	Thermistor (coil) (not for FCQ71)	K5	Sealing material

1.3 FCQ100, 125B

Exploded view

The illustration below shows the exploded view.

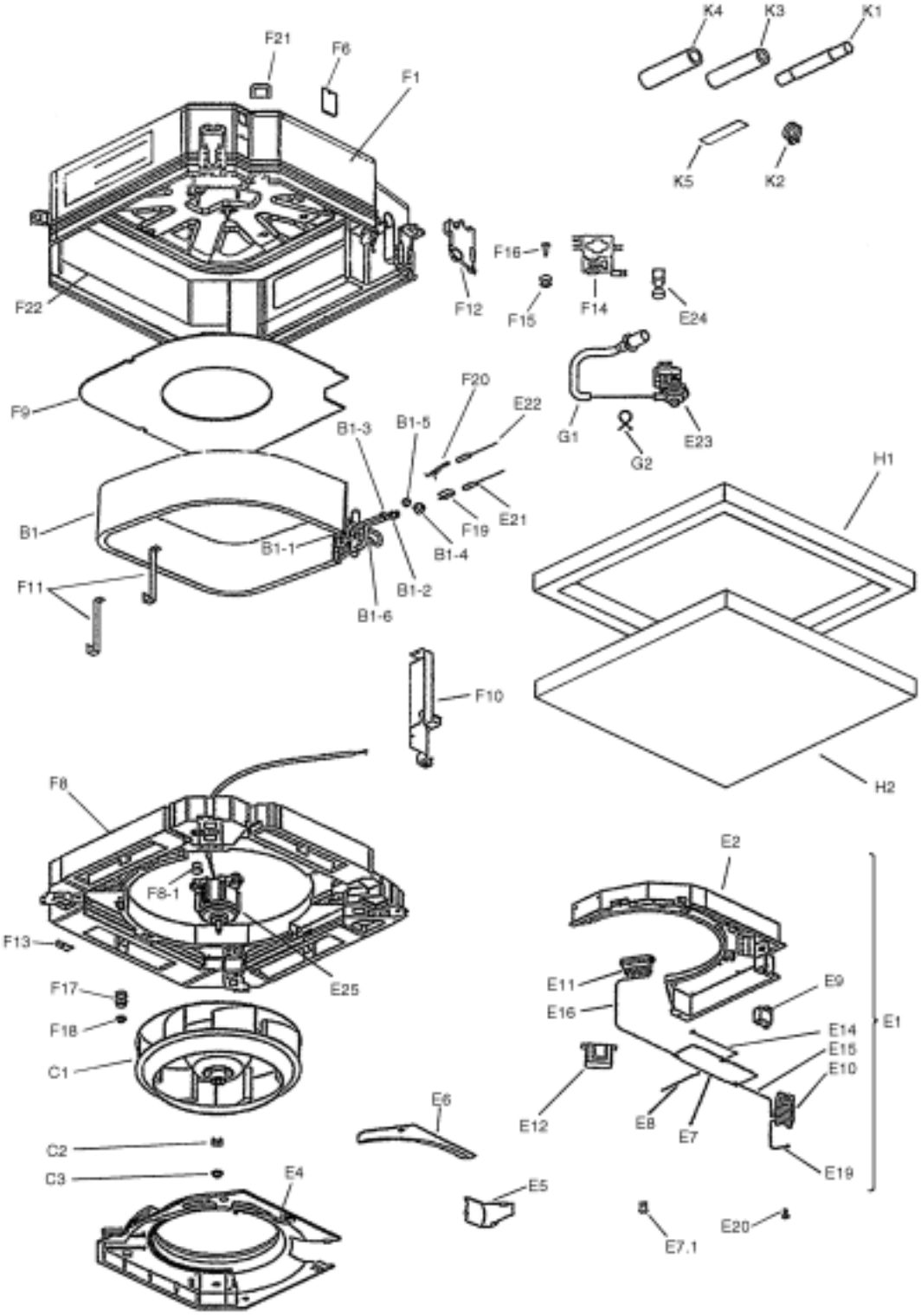

Components

The table below contains the components of the exploded view.

No.	Component	No.	Component
B1	Heat exchanger assy	E25	Fan motor
B1.1	Distributor with filter	F1	Casing assy
B1.2	Single union joint	F6	Inspection cover assy
B1.3	Single union joint	F8	Drain pan assy
B1.4	Flare nut	F8.1	Drain plug
B1.5	Flare nut	F9	Sound absorbing material
C1	Fan rotor (turbo)	F10	Heat exchanger blind plate assy
C2	Lock washer	F11	Heat exchanger mounting plate
C3	Nut with washer	F12	Hold plate assy
E1	Switch box assy	F13	Panel mounting plate
E2	Switch box body	F14	Drain pump mounting plate
E4	Bell mouth	F15	Vibration isolator
E5	Switch box cover assy 1	F16	Hexagon mounting bolt
E6	Switch box cover 2	F17	Vibration isolator
E7.1	PCB assy	F18	Nut with washer
E7.1.1	Thermistor (Air)	F19	Feeler bulb clamp
E9	Capacitor	F21	Rubber bush
E10	Terminal	F22	Inner heat insulator
E11	Terminal block	G1	Drain hose
E12	Power supply transformer	G2	Hose band
E14	Wire harness	H1	Top tray assy
E15	Wire harness	H2	Bottom tray assy
E16	Wire harness	K1	Drain hose assy
E19	Earth wire	K2	Hose band
E20	Earth screw	K3	Insulation for joint (liquid)
E21	Thermistor (liquid)	K4	Insulation for joint (gas)
E23	Drain pump	K5	Sealing material
E24	Float switch		

1.4 FFQ25, 35, 50, 60B

Exploded view

The illustration below shows the exploded view.

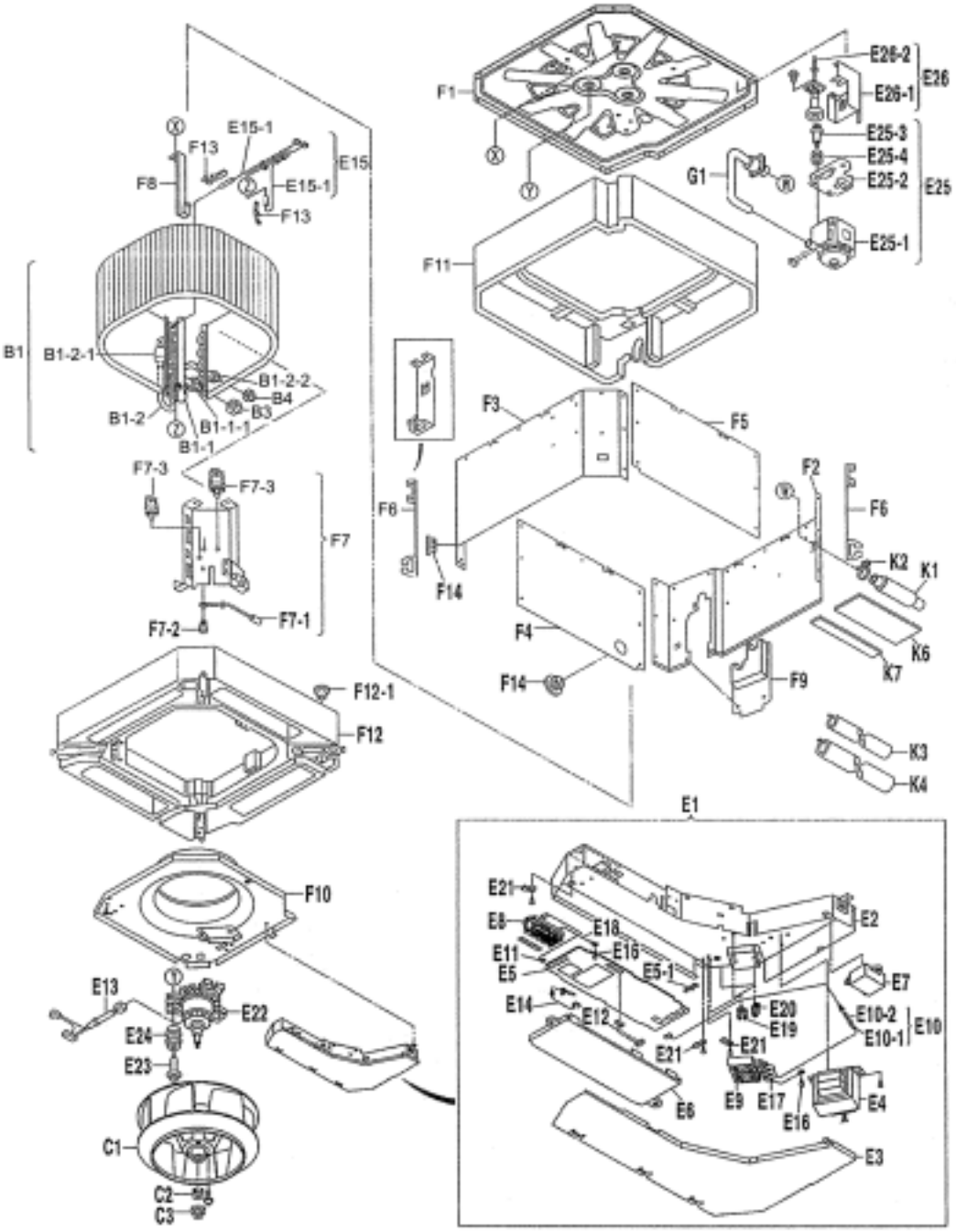

Components

The table below contains the components of the exploded view.

No.	Component	No.	Component
B1	Heat exchanger assy	E21	Lock metal
B1-1	Header assy	E22	Single phase AC fan motor
B1-1-1	Single union joint 3/8 (Only for FFQ25 and FFQ35)	E23	Vibro-isolating bolt
		E24	Vibration isolator
B1-1-1	Single union joint 1/2 (Only for FFQ50 and FFQ60)	E25	Drain pump ASSY
		E25-1	Drain pump
B1-2	Liquid pipe assy	E25-2	Drain pump mounting plate
B1-2-1	Distributor	E25-3	Mounting bolt
B1-2-2	Single union joint 1/4	E25-4	Rubber vibration isolator
B3	Flare nut	E26	Float switch mounting plate assy
B4	Flare nut	E26-1	Float switch mounting plate
C1	Turbo fan rotor	E26-2	Float switch assy
C2	Fan rotation stopper	F1	Top plate assy
C3	Insulation nut	F2	Front plate sealing assy
E1	Electric components assy	F3	Localized die rear plate
E2	Switch box assy	F4	Localized die rear plate
E3	Cover, switch box	F5	Localized die rear plate
E4	Power transformer	F6	Hanger metal assy
E5	Printed circuit assy	F7	Blind plate assy
E5-1	Capacity setting adapter	F7-1	Grounding wire
E6	Housing, printed circuit	F7-2	Grounding screw
E7	Capacitor, fan Motor	F7-3	Locking wire saddle
E8	Terminal block	F8	H/E mounting plate
E9	Terminal block	F9	Hold Plate assy
E10	Wire harness (transmission)	F10	Bell mouth assy
E10-1	Fuse holder	F11	Inner insulation top panel
E10-2	Fuse	F12	Drain pan top assy
E11	Wire harness assy	F12-1	Drain plug
E12	Wire harness assy (swing motor)	F13	Thermistor mounting spring
E13	Relay harness for fan motor	F14	Bushing
E14	Thermistor (for air)	G1	Drain hose assy
E15	Thermistor assy	K1	Internal drain hose
E15-1	Thermistor	K2	Hose band
E16	Grounding screw	K3	Insulation for joint (liquid)
E17	Grounding wire	K4	Insulation for joint (gas)
E18	Grounding wire	K6	Drain hose sealing material
E19	Wire clip	K7	sealing material
E20	Wire clip		

1.5 FBQ35, 50B

Exploded view

The illustration below shows the exploded view.

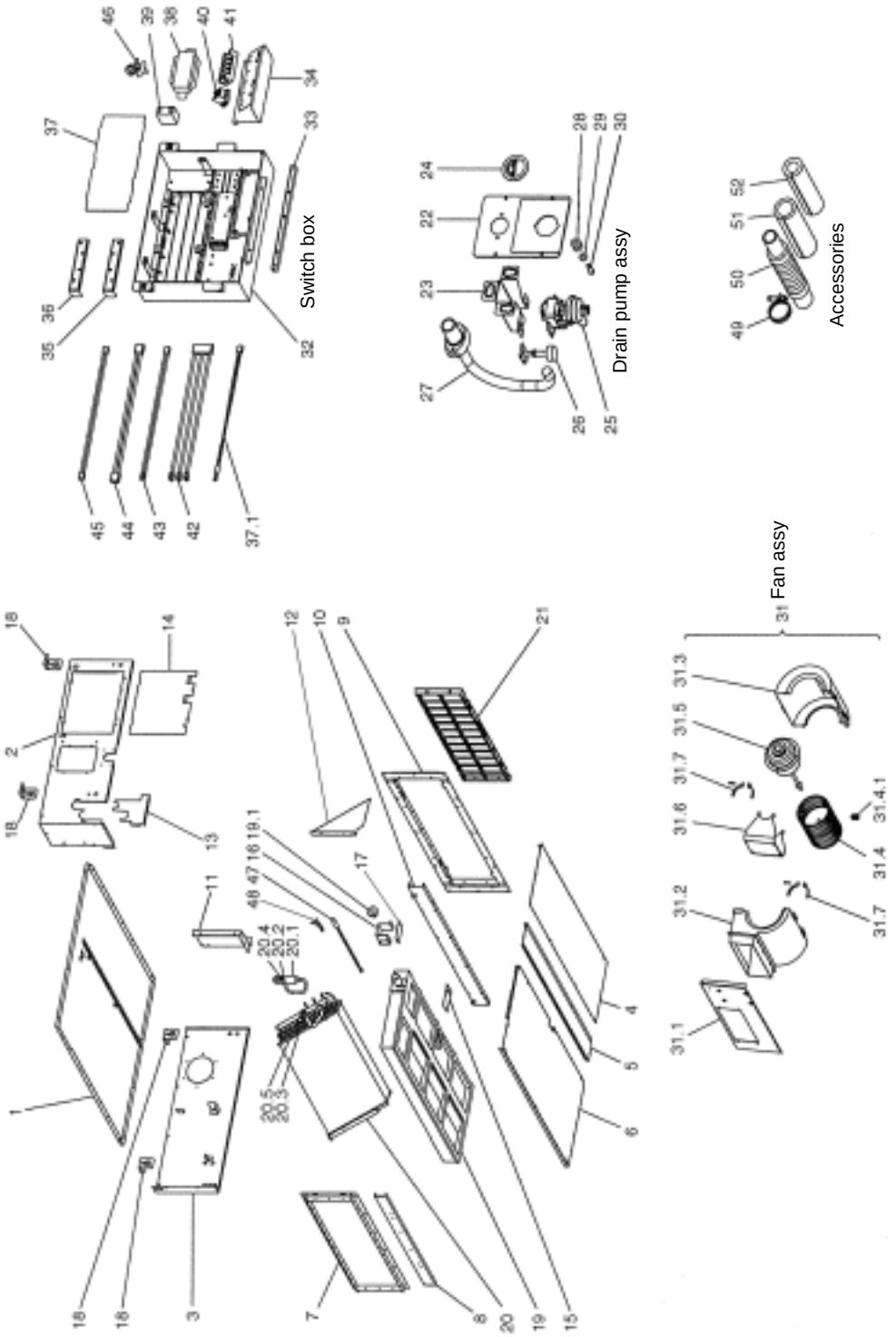

Components

The table below contains the components of the exploded view.

No.	Component	No.	Component
1	Top plate assy	29	Plain washer
2	Right plate assy	30	Fitting bolt drain pump
3	Left plate assy	31	Fan assy
4	Interchangeable plate	31.1	Fan top plate
5	Small bottom plate	31.2	Fan housing bottom
6	Large bottom plate	31.3	Fan housing top
7	Air outlet flange	31.4	Rotor assy
8	Center stay assy	31.4.1	Hexagon socket screw
9	Air filter holding plate assy	31.5	Fan motor
10	Stay for fan top panel assy	31.6	Fan motor stand
11	Fan side blind plate assy	31.7	Motor fixing plate assy
12	Cooler side blind plate assy	32	Switch box assy
13	Pipe setting plate assy	32.1	Switch box body
14	Swtich box cover assy	32.2	Switch box fixing plate
15	Drain pan setting plate	32.3	Terminal fixing plate
16	Drain socket cover assy 1	32.4	Option fixing plate left
17	Drain socket cover assy 2	32.5	Option fixing plate right
18	Hanger bracket	32.6	PCB assy
19	Drain pan assy	32.7	Air thermistor
19.1	Drain socket cap	32.8	Power supply transformer
20	Heat exchanger assy	32.9	Fan motor capacitor
20.1	Distributor with filter assy	32.10	Terminal for remote control
20.2	Single union joint	32.11	Terminal for power supply
20.3	Single union joint	32.12	Wire harness
20.4	Flare nut	32.13	Wire harness
20.5	Flare nut	32.14	Tie wrap with clip
21	Air filter assy	32.15	Capacity setting adapter
22	Service cover assy	33	Thermistor (liquid)
23	Drain pump fixing plate	34	Thermistor (coil)
24	Service cover cap assy	35	Thermistor fixing blade
25	Drain pump	36	Metal clamp
26	Float switch	37	Drain hose
27	Drain hose assy	38	Insulation for joint (gas)
28	Vibration absorber	39	Insulation for joint (liquid)

1.6 FBQ60, 71B

Exploded view

The illustration below shows the exploded view.

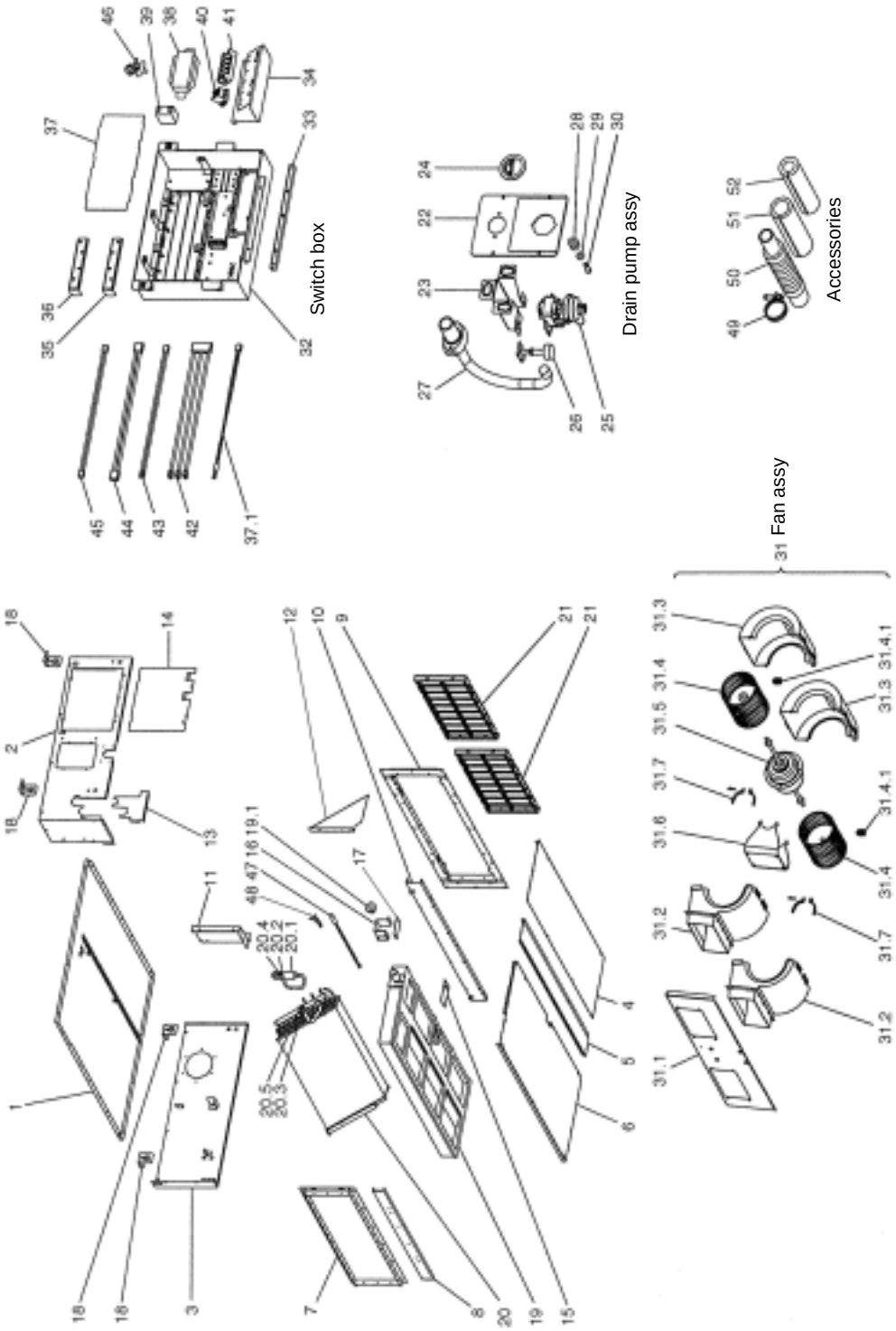

Components

The table below contains the components of the exploded view.

No.	Component	No.	Component
1	Top plate assy	29	Plain washer
2	Right plate assy	30	Fitting bolt drain pump
3	Left plate assy	31	Fan assy
4	Interchangeable plate	31.1	Fan top plate
5	Small bottom plate	31.2	Fan housing bottom
6	Large bottom plate	31.3	Fan housing top
7	Air outlet flange	31.4	Rotor assy
8	Center stay assy	31.4.1	Hexagon socket screw (FBQ60)
9	Air filter holding plate assy	31.5	Fan motor
10	Stay for fan top panel assy	31.6	Fan motor stand
11	Fan side blind plate assy	31.7	Motor fixing plate assy
12	Cooler side blind plate assy	32	Switch box assy
13	Pipe setting plate assy	32.1	Switch box body
14	Swtich box cover assy	32.2	Switch box fixing plate
15	Drain pan setting plate	32.3	Terminal fixing plate
16	Drain socket cover assy 1	32.4	Option fixing plate left
17	Drain socket cover assy 2	32.5	Option fixing plate right
18	Hanger bracket	32.6	PCB assy
19	Drain pan assy	32.7	Air thermistor
19.1	Drain socket cap	32.8	Power supply transformer
20	Heat exchanger assy	32.9	Fan motor capacitor
20.1	Distributor with filter assy	32.10	Terminal for remote control
20.2	Single union joint	32.11	Terminal for power supply
20.3	Single union joint	32.12	Wire harness
20.4	Flare nut	32.13	Wire harness
20.5	Flare nut	32.14	Tie wrap with clip
21	Air filter assy	32.15	Capacity setting adapter (FBQ60)
22	Service cover assy	33	Thermistor (liquid)
23	Drain pump fixing plate	34	Thermistor (coil) (FBQ60)
24	Service cover cap assy	35	Thermistor fixing blade
25	Drain pump	36	Metal clamp
26	Float switch	37	Drain hose
27	Drain hose assy	38	Insulation for joint (gas)
28	Vibration absorber	39	Insulation for joint (liquid)

1.7 FBQ100, 125B

Exploded view

The illustration below shows the exploded view.

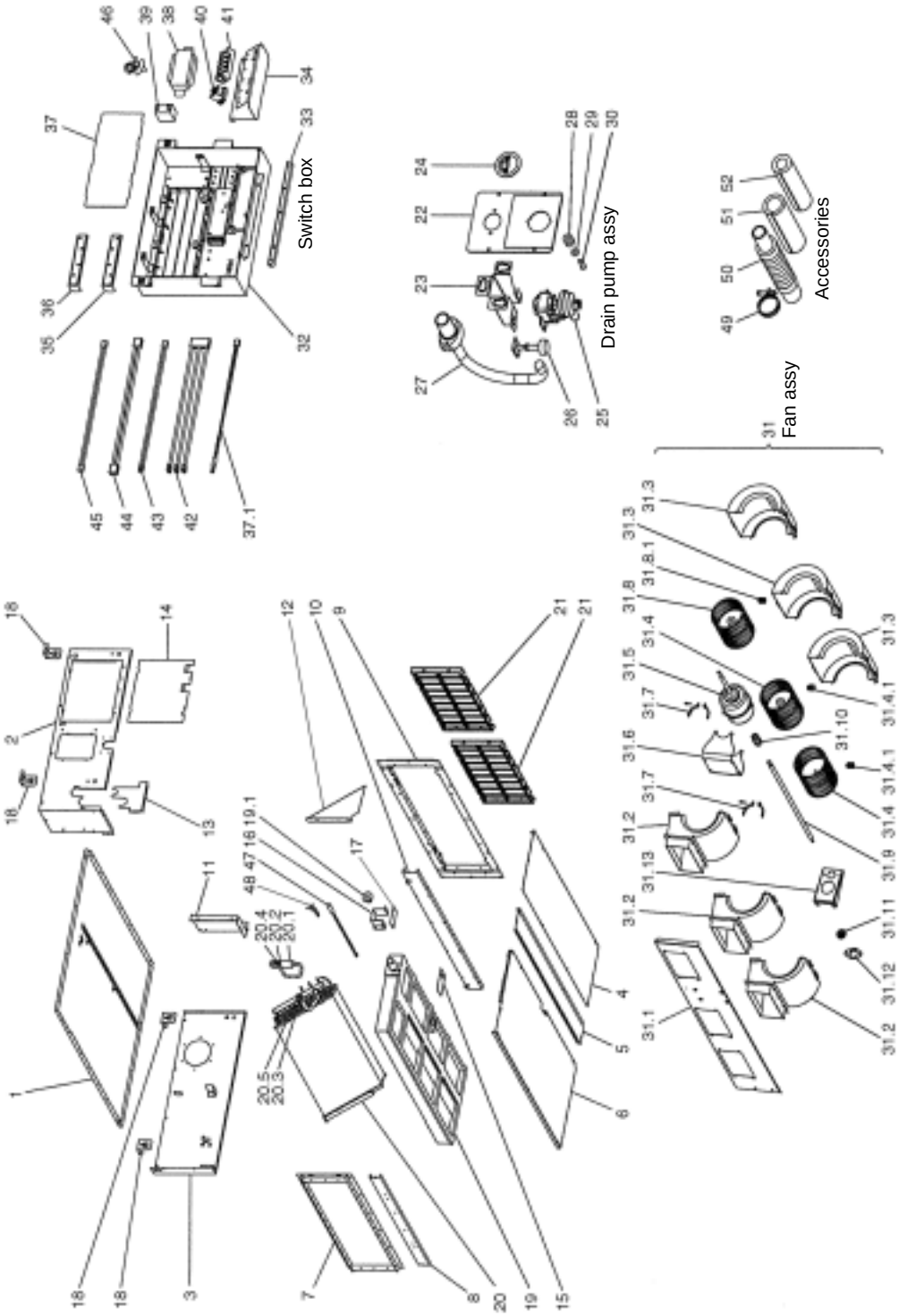

Components

The table below contains the components of the exploded view.

No.	Component	No.	Component
1	Top plate assy	31	Fan assy
2	Right plate assy	31.1	Fan top plate
3	Left plate assy	31.2	Fan housing bottom
4	Interchangeable plate	31.3	Fan housing top
5	Small bottom plate	31.4	Rotor assy
6	Large bottom plate	31.5	Fan motor
7	Air outlet flange	31.6	Fan motor stand
8	Center stay assy	31.7	Motor fixing plate assy
9	Air filter holding plate assy	31.8	Rotor assy
10	Stay for fan top panel assy	31.8.1	Hexagon socket screw
11	Fan side blind plate assy	31.9	Shaft assy
12	Cooler side blind plate assy	31.10	Coupling
13	Pipe setting plate assy	31.11	Vibro proof rubber assy
14	Swtich box cover assy	31.12	Bearing board
15	Drain pan setting plate	31.13	Bearing fixing plate
16	Drain socket cover assy 1	32	Switch box assy
17	Drain socket cover assy 2	32.1	Switch box body
18	Hanger bracket	32.2	Switch box fixing plate
19	Drain pan assy	32.3	Terminal fixing plate
19.1	Drain socket cap	32.4	Option fixing plate left
20	Heat exchanger assy	32.5	Option fixing plate right
20.1	Distributor with filter assy	32.6	PCB assy
20.2	Single union joint	32.7	Air thermistor
20.3	Single union joint	32.8	Power supply transformer
20.4	Flare nut	32.9	Fan motor capacitor
20.5	Flare nut	32.10	Terminal for remote control
21	Air filter assy	32.11	Terminal for power supply
22	Service cover assy	32.12	Wire harness
23	Drain pump fixing plate	32.13	Wire harness
24	Service cover cap assy	32.14	Tie wrap with clip
25	Drain pump	33	Thermistor (liquid)
26	Float switch	35	Thermistor fixing blade
27	Drain hose assy	36	Metal clamp
28	Vibration absorber	37	Drain hose
29	Plain washer	38	Insulation for joint (gas)
30	Fitting bolt drain pump	39	Insulation for joint (liquid)

1.8 FDQ125, 200, 250B

Exploded view

The illustration below shows the exploded view.

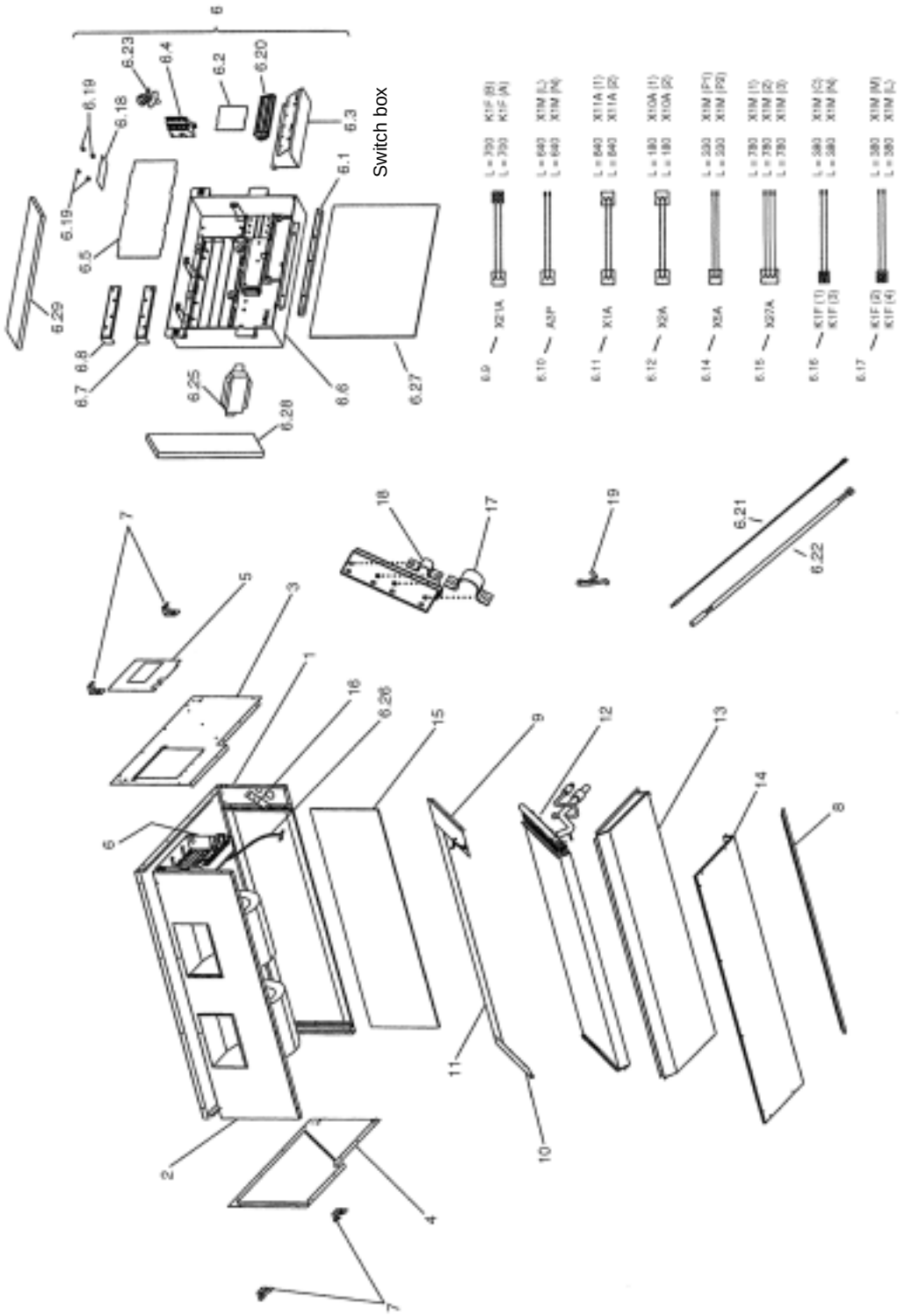

Components

The table below contains the components of the exploded view.

No.	Component	No.	Component
1	Top plate assy	6.22	Thermistor
2	Fan assy + fan mounting plate	6.23	Tie wrap with clip
3	Side plate right	6.24	PCB assy
4	Side plate left	6.25	Power supply transformer
5	Service cover assy	6.26	Earth wire
6	Switch box assy	6.27	Insulation switch box
6.1	Switch box fixing plate	6.28	Insulation switch box
6.3	Terminal fixing plate	6.29	Insulation switch box
6.4	Magnetic contacor	7	Hook
6.6	Switch box body	8	Filter cover
6.7	Option fixing plate left	9	Fixture heat exchanger right
6.8	Option fixing plate right	10	Fixture heat exchanger left
6.9	Wire harness	11	By-pass sealing plate
6.10	Wire harness	12	Heat exchanger lassy
6.14	Wire harness	13	Drain pan assy
6.15	Wire harness	14	Bottom plate assy
6.16	Wire harness	15	Airfilter
6.17	Wire harness	16	Pipe fixing plate
6.18	PCB assy	17	Clamp
6.19	Locking guard spacer	18	Clamp
6.20	Terminal strip	19	Thermistor fixing
6.21	Thermistor		

1.9 FDEQ71, 100B

Exploded view

The illustration below shows the exploded view.

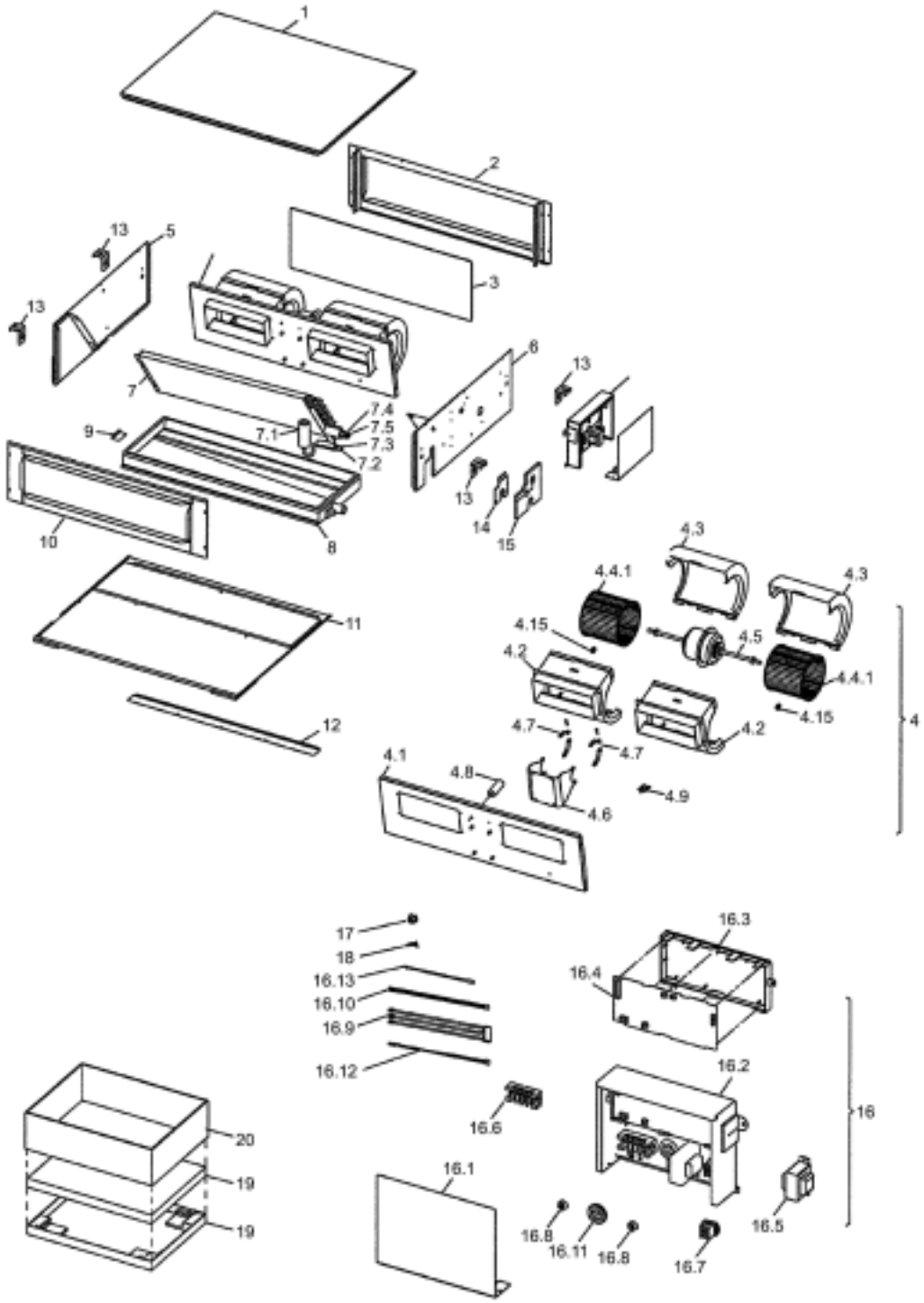

Components

The table below contains the components of the exploded view.

No.	Component	No.	Component
1	Top plate assy	10	Discharge plate assy
2	Suction plate assy	11	Bottom assy
3	Air filter	12	Filter holding plate
4	Fan assy	13	Hook
4.1	Fan top plate assy	14	Pipe support plate
4.2	Fan housing bottom (large)	15	Pipe sealing
4.3	Fan housing top (large)	16	Switch box assy
4.4.1	Rotor assy	16.1	Switch box cover assy
4.5	Fan motor assy	16.2	Switch box mounting plate assy
4.6	Fan motor stand	16.3	Resin case
4.7	Motor fixing plate assy	16.4	PCB assy
4.8	Capacitor 5 microf	16.5	Transformer
4.9	Cable holder	16.6	Terminal board
4.15	Hexagon socket screw	16.7	Terminal strip
5	Right side plate assy	16.8	Tie wrap with clip (L=140)
6	Left side plate assy	16.9	Wire harness (X2M - X27A)
7	Heat exchanger assy	16.10	Wire harness (X1M - X5A)
7.1	Distributor with filter assy	16.11	Blind rubber butching
7.2	Single union joint 3/8	16.12	Thermistor (air)
7.3	Flare nut 3/8	16.13	Thermistor (liquid)
7.4	Single union joint 5/8	17	
7.5	Flare nut 5/8	18	
8	Drain pan sealing assy	19	
9	Drain pan fixing	20	

1.10 FDEQ125B

Exploded view

The illustration below shows the exploded view.

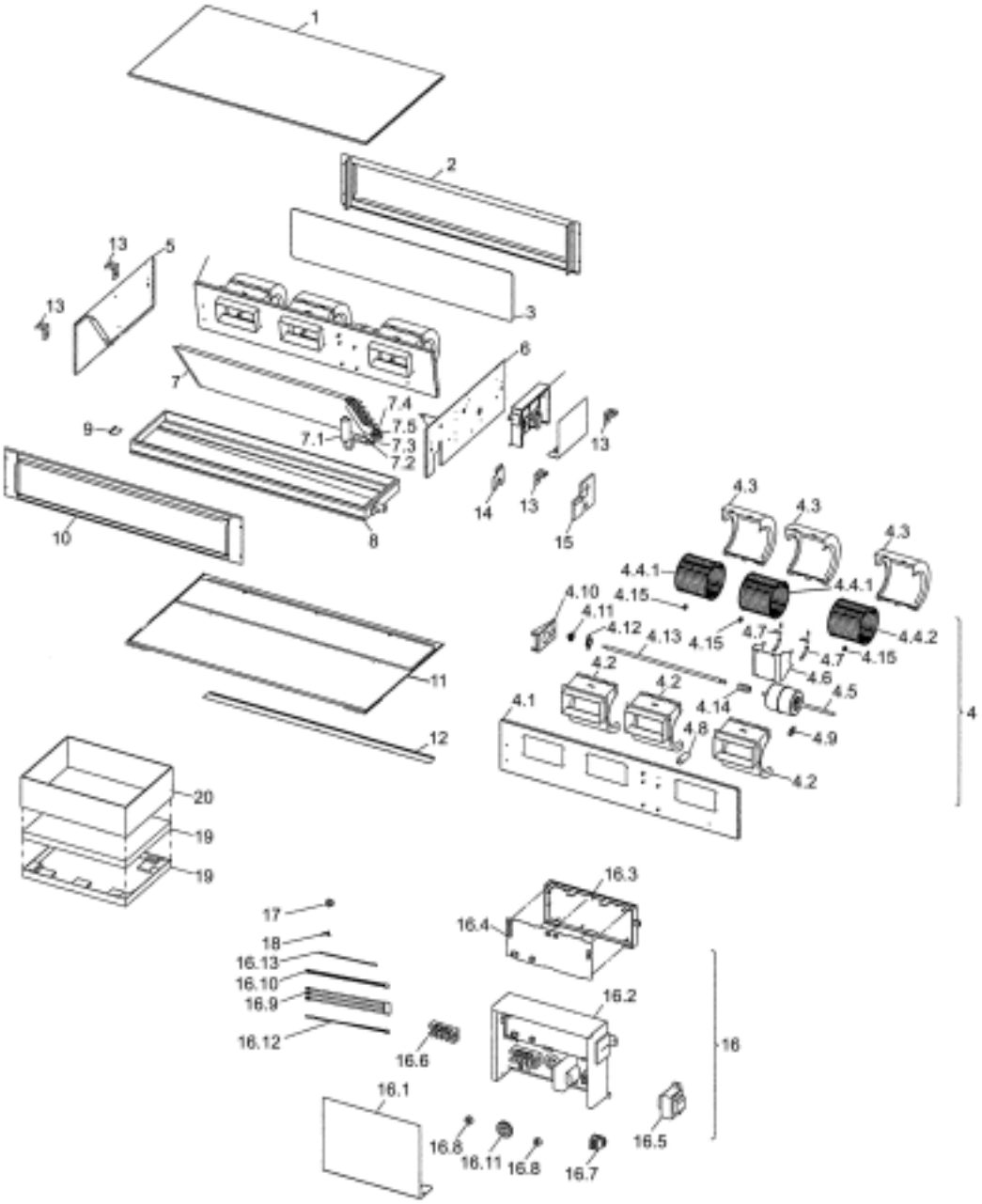

Components

The table below contains the components of the exploded view.

No.	Component	No.	Component
1	Top plate assy	7.5	Flare nut 5/8
2	Suction plate assy	8	Drain pan sealing assy
3	Air filter	9	Drain pan fixing
4	Fan assy	10	Discharge plate assy
4.1	Fan top plate assy	11	Bottom assy
4.2	Fan housing bottom (small)	12	Filter holding plate
4.3	Fan housing top (small)	13	Hook
4.4.1	Rotor assy	14	Pipe support plate
4.4.2	Rotor assy	15	Pipe sealing
4.4.2	Rotor assy	16	Switch box assy
4.5	Fan motor assy	16.1	Switch box cover assy
4.6	Fan motor stand	16.2	Switch box mounting plate assy
4.7	Motor fixing plate assy	16.3	Resin case
4.8	Capacitor 5 microf	16.4	PCB assy
4.9	Cable holder	16.5	Transformer
4.10	Bearing board	16.6	Terminal board
4.11	Vibro proof rubber assy	16.7	Terminal strip
4.12	Bearing fixing plate	16.8	Tie wrap with clip (l=140)
4.13	Shaft assy	16.9	Wire harness (X2M - X27A)
4.14	Cuppling	16.10	Wire harness (X1M - X5A)
4.15	Hexagon socket screw	16.11	Blind rubber butching
5	Right side plate assy	16.12	Thermistor (air)
6	Left side plate assy	16.13	Thermistor (liquid)
7	Heat exchanger assy	17	
7.1	Distributor with filter	18	
7.2	Single union joint 3/8	19	
7.3	Flare nut 3/8	20	
7.4	Single union joint 5/8		

1.11 FCQ71, 100, 125, 140D

Overview

This part contains the following topics:

Topic	See page
Removal of Suction Grille	5–23
Removal of Air Filter	5–24
Removal of Decoration Panel	5–26
Removal of Horizontal Blade	5–28
Removal of Swing Motor	5–29
Removal of Switch Box	5–31
Removal of PC Board	5–33
Removal of Humidity Sensor and Air Temperature Thermistor	5–35
Removal of Fan Motor	5–36
Removal of Drain Pan, Drain Pump, Float Switch	5–38
Removal of Heat Exchanger Temperature Thermistor	5–41

1.11.1 Removal of Suction Grille

Warning Be sure to wait 10 minutes or more after turning off all power supplies before disassembling work.

Procedure:

Step	Procedure		Points
1	Removing the suction grille	①Push the buttons and pull down	
1	Push the 2 buttons simultaneously and pul the suction grille down slowly.	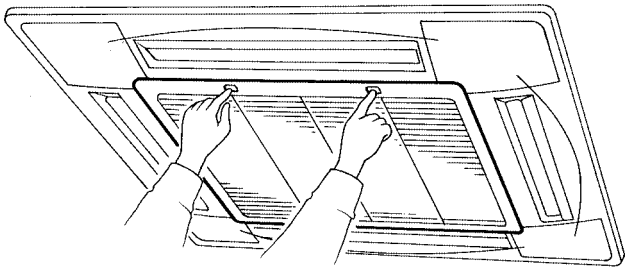 (S2608)	■ When closing, push up the grille slowly.
2	With the suction grille open at an angle of 45°, lift it up to remove it.	②Open te 45° 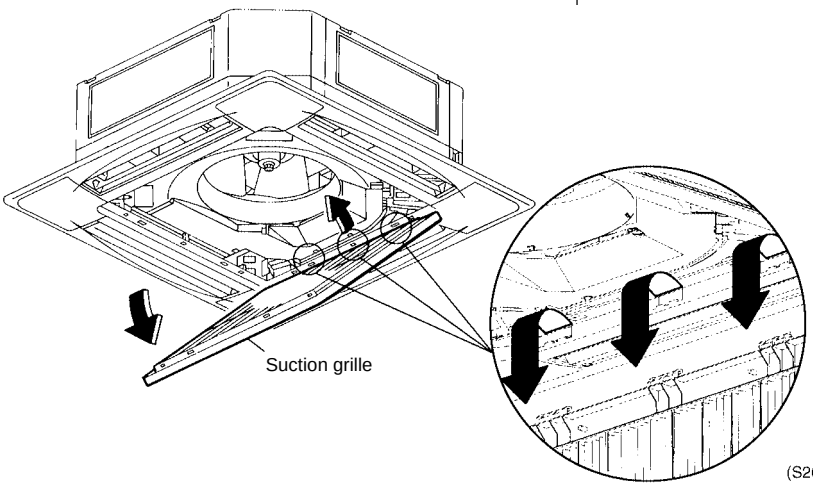 (S2609)	■ Grille is attached with 3 hooks

5

1.11.2 Removal of Air Filter

Warning Be sure to wait 10 minutes or more after turning off all power supplies before disassembling work.

Procedure:

Step	Procedure	Points
1 Removing the air filter		
1	Open the suction grille. (Refer to the procedure for removing the suction grille.)	
2	Disengage the hooks of the air filter by pulling the filter downward at an angle, and remove the filter.	

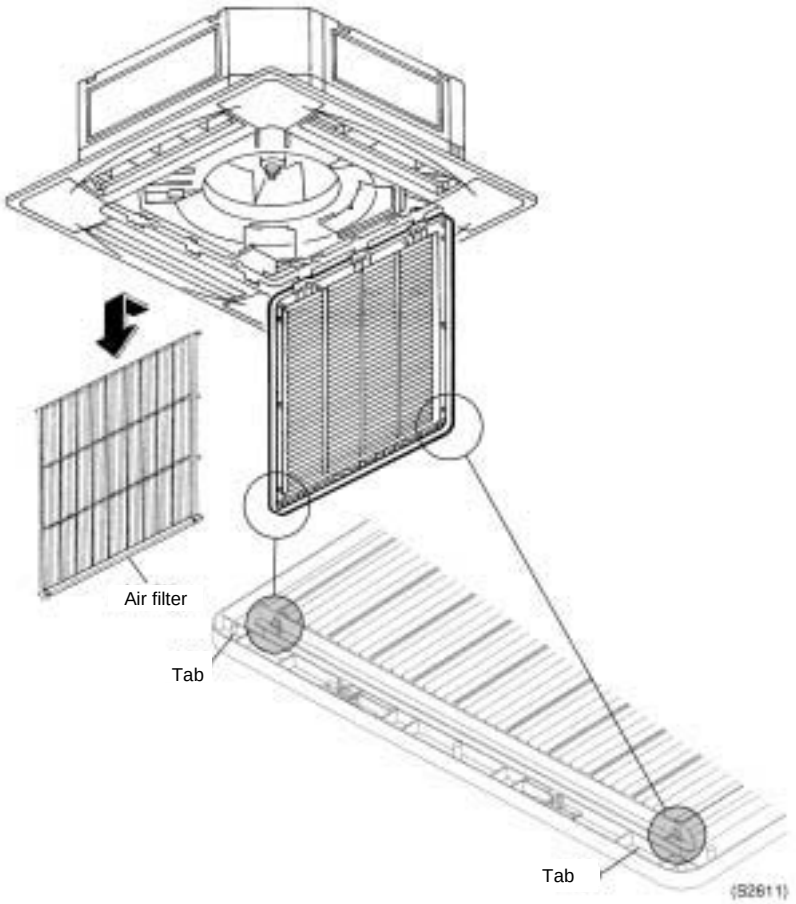

5

Step	Procedure	Points
2 Mounting the air filter		
1	Hook the air filter on projections at the top of	
2	Force the bottom of the air filter into projections at the bottom of the suction grille to secure the air filter.	

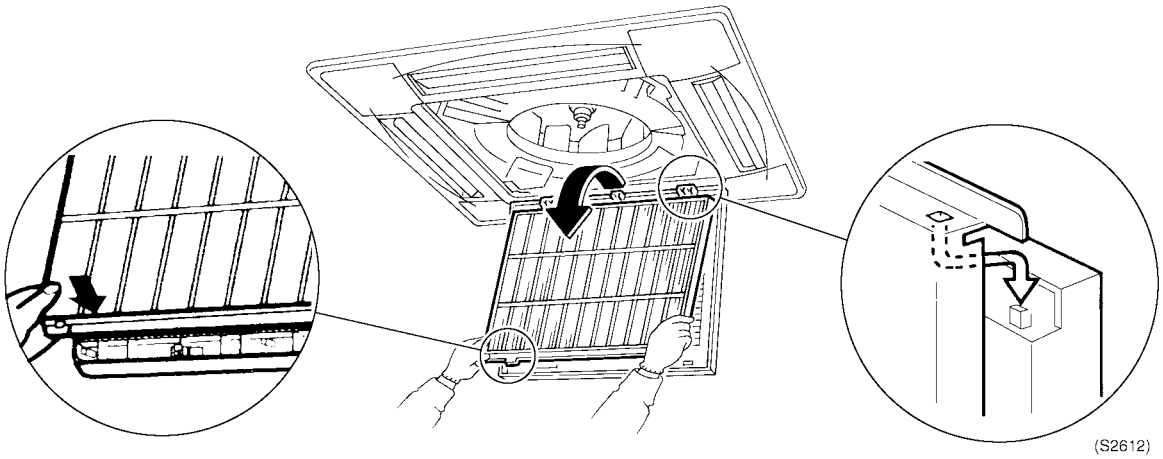

5

1.11.3 Removal of Decoration Panel

Warning Be sure to wait 10 minutes or more after turning off all power supplies before disassembling work.

Procedure:

Step	Procedure	Points
1 Removing the decoration covers in the corner of decoration panel		■ Remove a string (provided to prevent the decoration cover from dropping) from the decoration cover in the corner from the pin to dismount the decoration cover.
1	To remove the decoration covers in the corner, pull the inside (suction grille side) down.	
2	Remove the one screw to dismount the terminal block box cover, then disconnect the connector for swing motor. For the auto grille, disconnect the auto grille power supply cable from the power supply terminal block.	
3	Loosen the 4 retaining screws from the decoration panel.	
4	The decoration panel is caught on the 4 hooks of the main unit.	

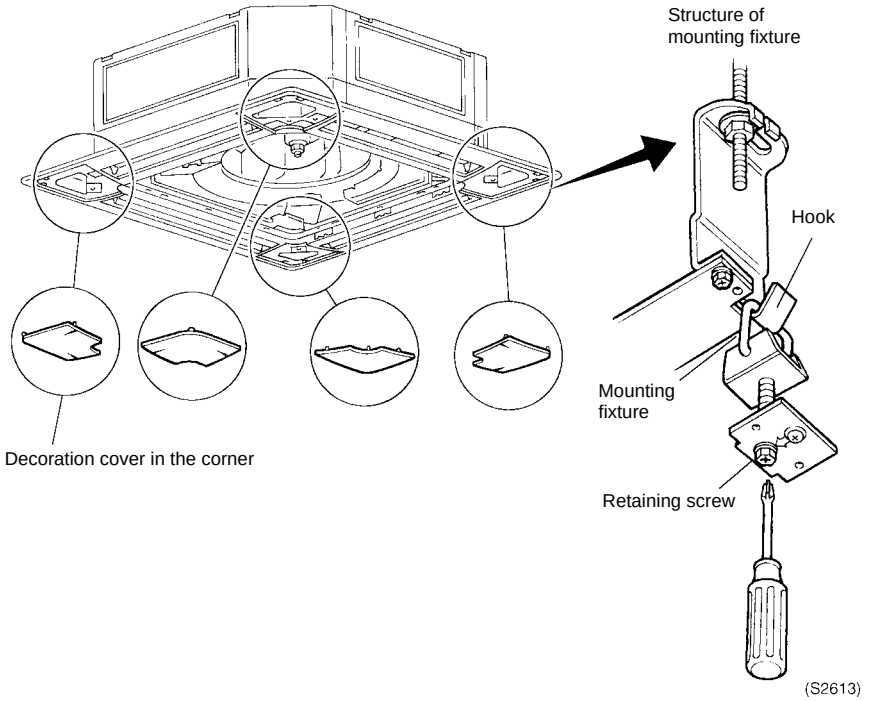

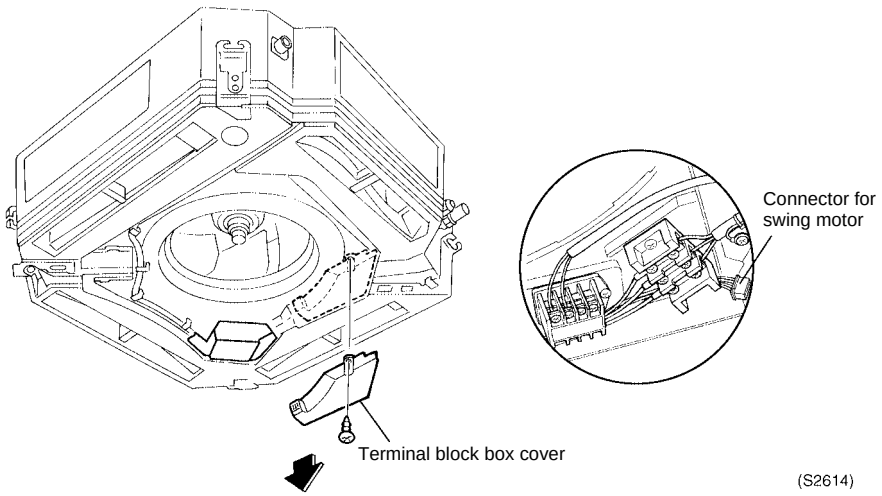

Step	Procedure		Points
5	Remove the 2 mounting fixtures on the outside (Section A), then remove the 2 mounting fixtures on the inside (Section B).	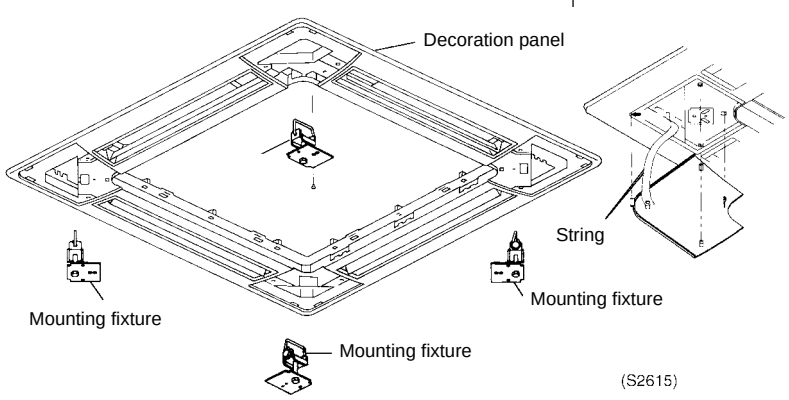	
6	Remove the decoration panel.		■ Mounting the decoration coverin the corner Mount the decoration cover so that 4 hooks on the decoration cover can engage with the hole in the decoration panel.

5

1.11.4 Removal of Horizontal Blade

Warning Be sure to wait 10 minutes or more after turning off all power supplies before disassembling work.

Procedure:

Step	Procedure		Points
1	Remove 4 screws each (16 screws in total) to dismount the 4 seal materials.	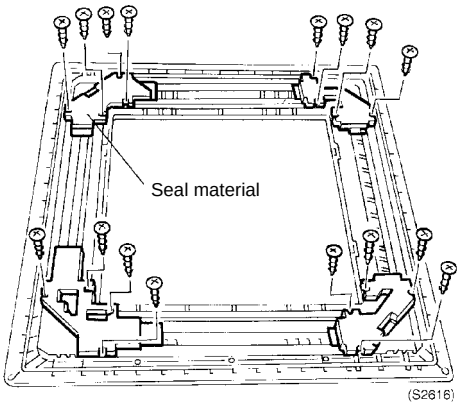	
2	Remove 2 screws each (16 screws in total) to dismount the 8 horizontal blade bearings.	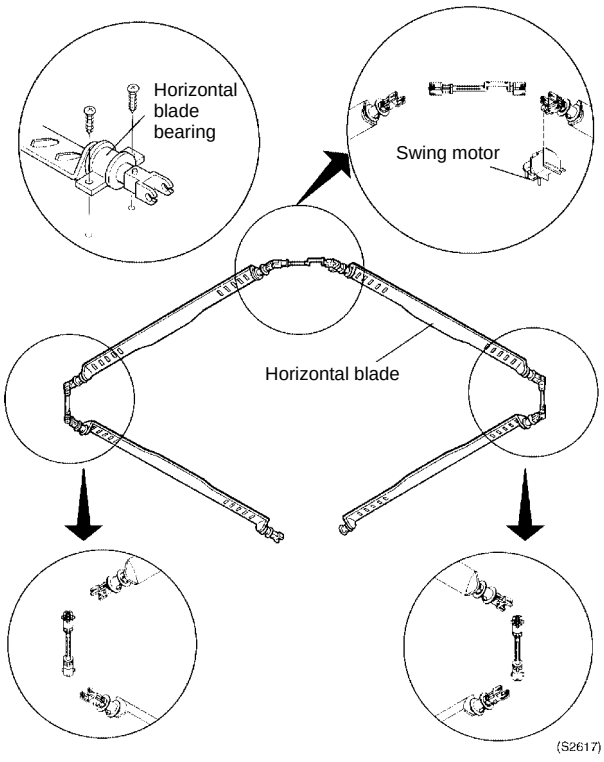	**Reassembling** ■ Make sure that the air outlet insulation material (seal material) is as shown below (may result in dew condensation). 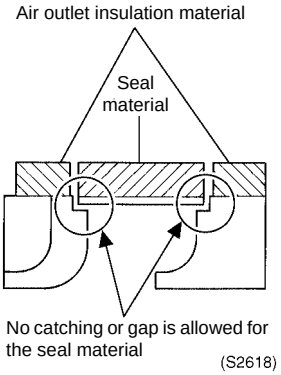

5

1.11.5 Removal of Swing Motor

Warning Be sure to wait 10 minutes or more after turning off all power supplies before disassembling work.

Procedure:

Step	Procedure		Points
1	Remove the decoration cover in the corner located right below the refrigerant piping.	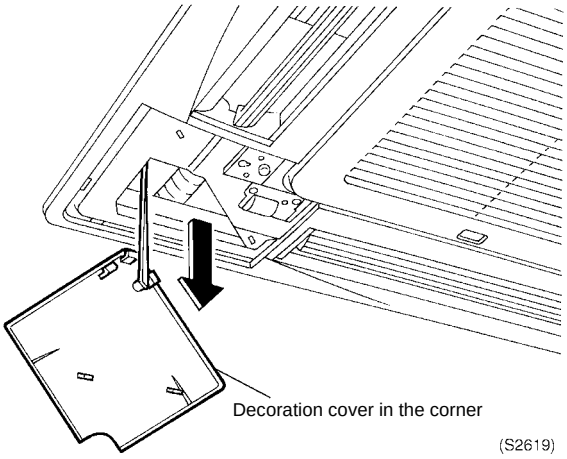	
2	Remove the 2 swing motor mounting screws.	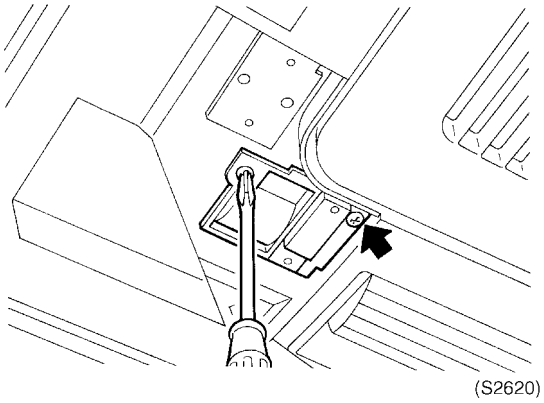	
3	Disconnect the swing motor connector.	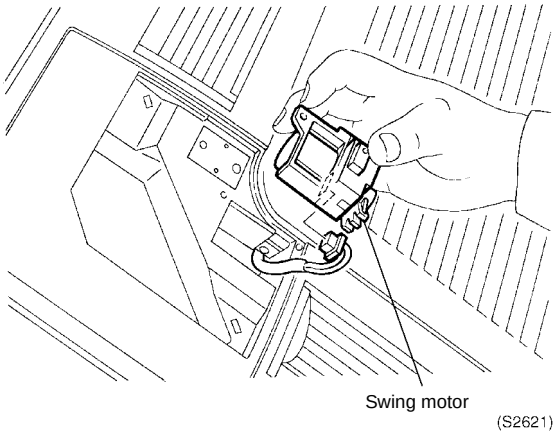	■ The connector section is protected with the use of aluminum tape. Remove the aluminum tape.

5

Step	Procedure		Points
■ Caution during swing motor installation			■ Protect the connector section with using the aluminum tape.
1.	After installing the swing motor, be sure to turn off the power supply for reset (for initializing the vane positions).	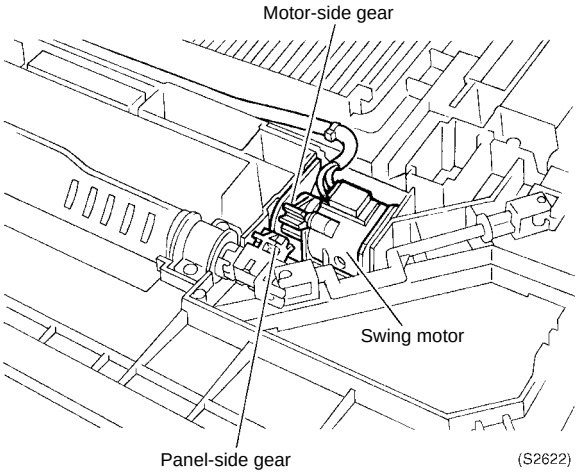	
2	Be sure to engage the gears on the motor side and panel side. (Improper gear engagement results in faulty swing operation and abnormal noise.)	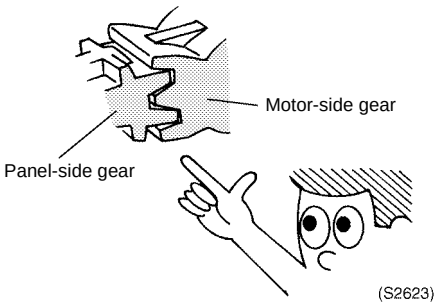	

5

1.11.6 Removal of Switch Box

Warning Be sure to wait 10 minutes or more after turning off all power supplies before disassembling work.

Procedure:

Step	Procedure		Points
1	Remove the 2 mounting screws on the switch box cover.	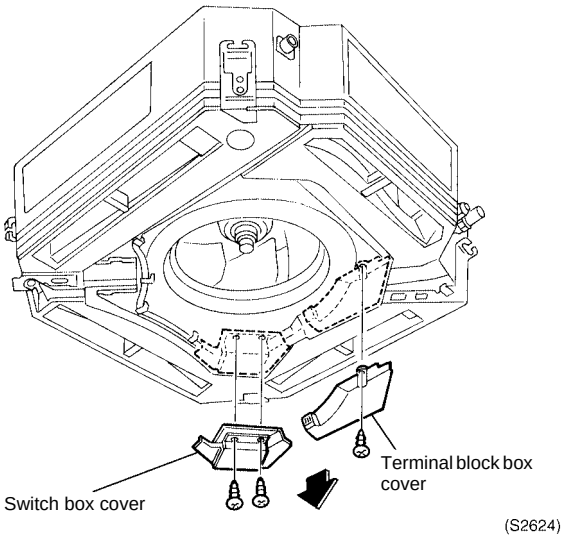	
2	Remove the 1 mounting screw on the terminal block cover.		
3	Disconnect each connector (7 connectors in total) connected to the inside of the switch box. ■ Transfer connector x 3 pieces ■ Direct connector x 4 pieces	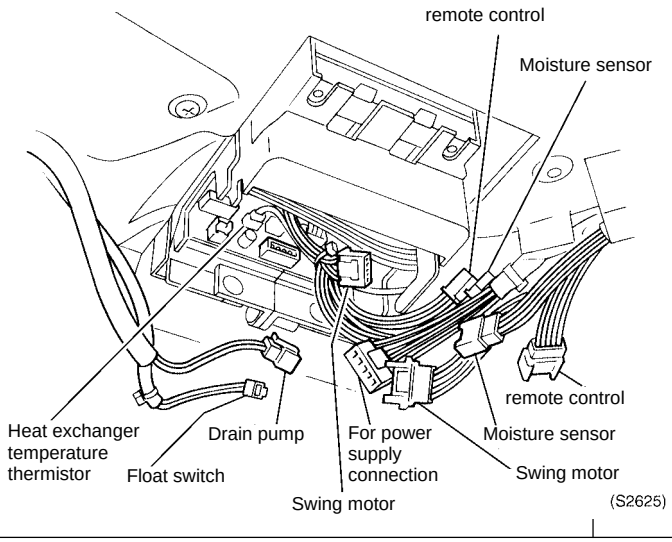	

5

Step	Procedure		Points
4	Disconnect the connector for fan motor. ■ For FCQ71D : Direct connector ■ For FCQ100~140D: Relay connector	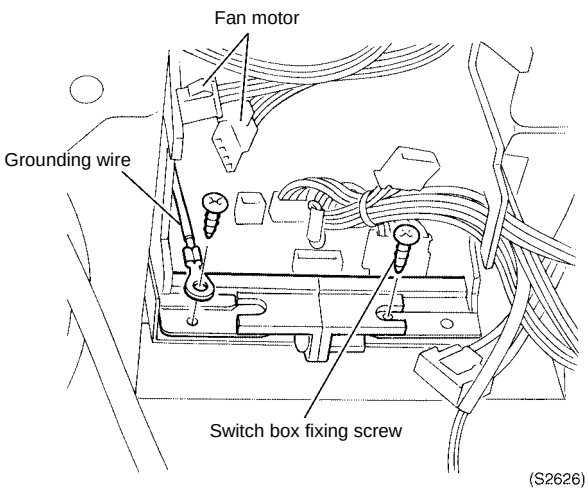	
5	Remove the grounding wire mounting screw.		
6	Remove the switch box fixing screw.		
7	Tilt the switch box in the direction shown by the arrow, then draw the entire switch box out.	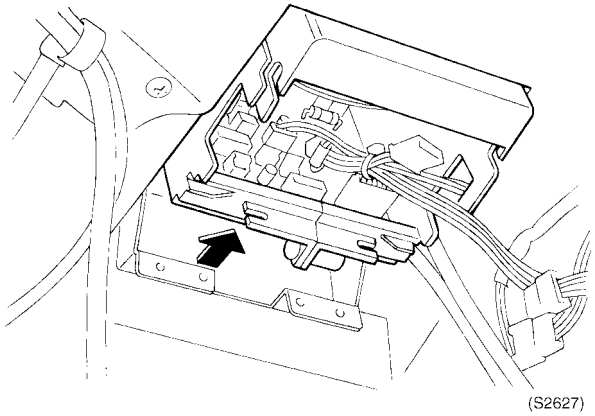 **(Status after removal)** 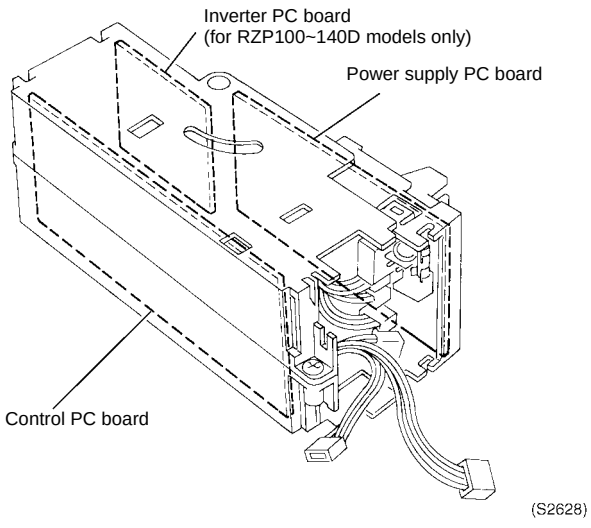	

5

1.11.7 Removal of PC Board

Warning Be sure to wait 10 minutes or more after turning off all power supplies before disassembling work.

Procedure:

Step	Procedure		Points
■	Remove the switch box according to the procedure for removing the switch box.	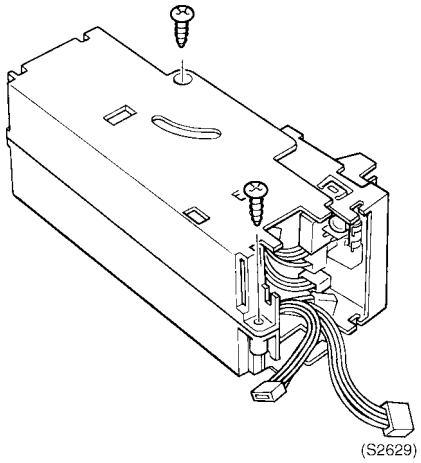 (S2629)	
1	Remove 2 switch box mounting screws to open the box.		
1	Disconnect the control PC board.	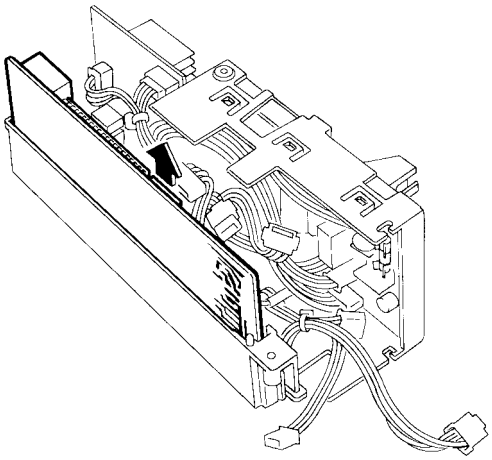 (S2630)	
1	Disconnect the 2 connectors between the power supply and control PC boards, then draw the control PC board out in the direction shown by the arrow.		
2	Disconnect the inverter PC board.	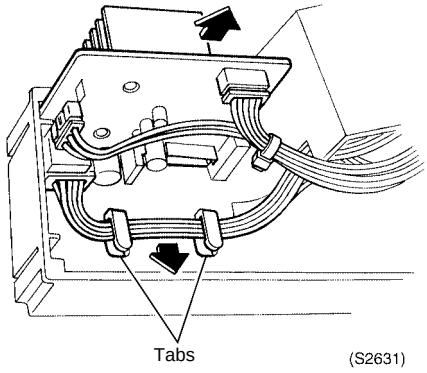 (S2631)	
1	Disconnect the harness from the 2 tabs provided in the box.		
2	Draw the inverter PC board out in the direction shown by the arrow.		

5

Step	Procedure		Points
3	Disconnect the power supply PC board.	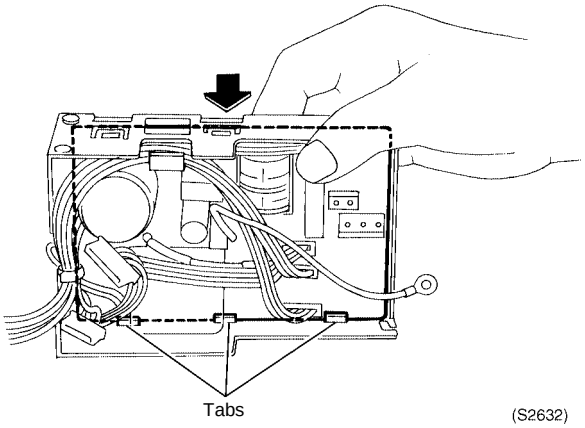	
1	Disengage the 3 tabs on the front by pressing the back of the PC board in the direction shown by the arrow, then remove the power supply PC board.		

5

1.11.8 Removal of Humidity Sensor and Air Temperature Thermistor

Warning Be sure to wait 10 minutes or more after turning off all power supplies before disassembling work.

Procedure:

Step	Procedure	Points
■ Remove the terminal block box cover according to the procedure for removing the switch box.		
1	Disconnect the connector for humidity sensor.	■ The moisture sensor and air temperature thermistor is integrated.
2	Disengage the 3 tabs to remove the humidity sensor.	

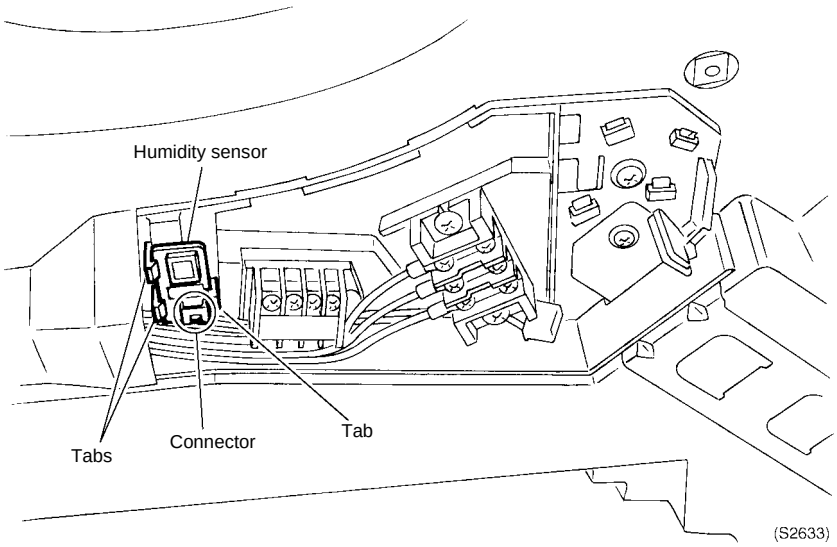

5

1.11.8 Removal of Fan Motor

Warning Be sure to wait 10 minutes or more after turning off all power supplies before disassembling work.

Procedure:

Step	Procedure	Points
■ Remove the terminal block box cover according to the procedure for removing the switch box, then disconnect the following connectors. Transfer connector ● Wired remote control ● Swing motor ● Humidity sensor Connector built in the switch box ● Connector used for power supply cables	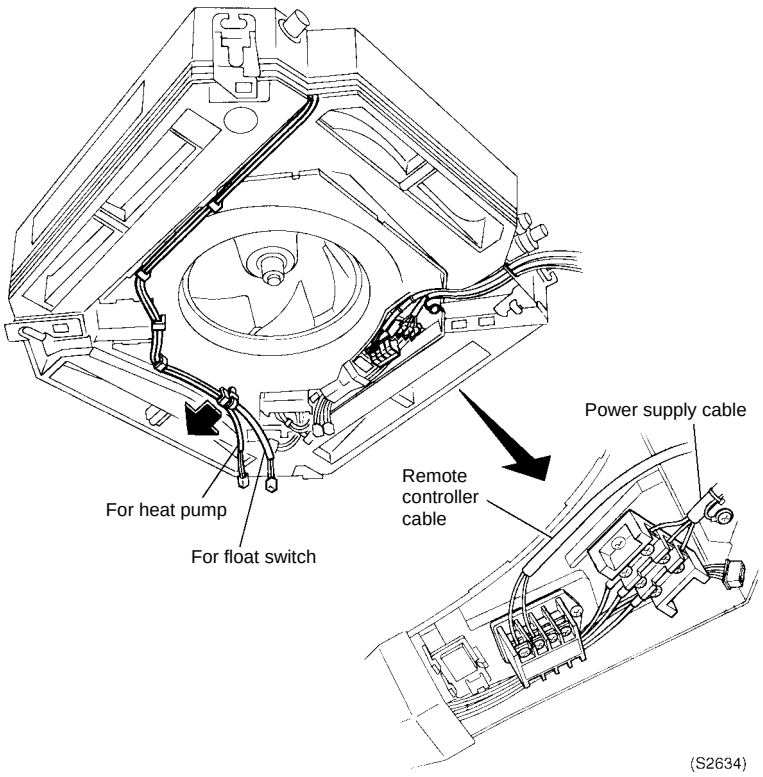	
1 Removing the bell mouth. 1 Disconnect the 2 remote control cables and 3 power supply cables. 2 Disconnect the drain pump and float switch wiring from bell mouth. (*1) 3 Remove the 5 mounting screws on the bell mouth.	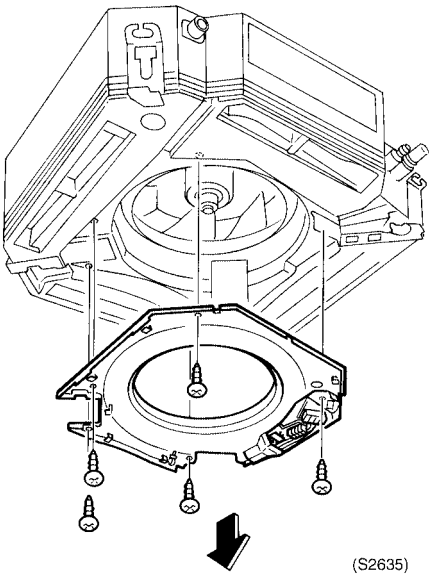	*1: At this time, do not cut the clamp material attached to the drain pan near the switch box. Loosen the mounting screw to remove the clamp material.

5

Step	Procedure		Points
2	Removing the fan rotor.	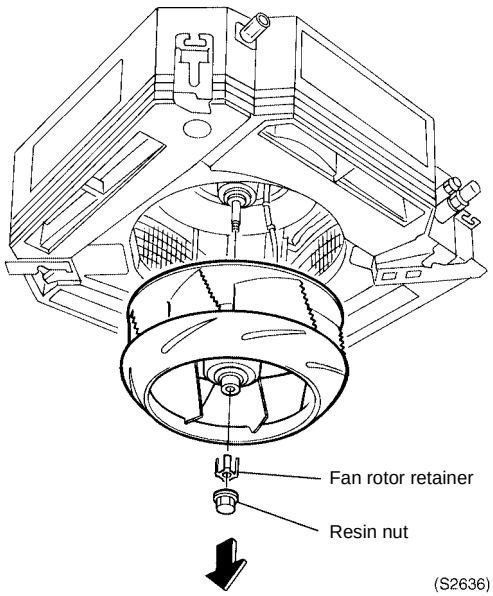	
1	Remove the resin nut and fan rotor retainer to dismount the fan rotor.		
3	Remove the fan motor.	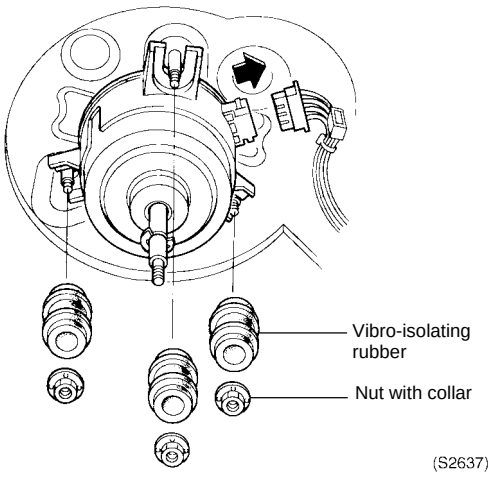	
1	Disconnect the 2 connectors on the fan motor.		
2	Remove the nut with collar and vibro-isolating runner to dismount the fan motor.		

5

1.11.10 Removal of Drain Pan, Drain Pump, Float Switch

Warning Be sure to wait 10 minutes or more after turning off all power supplies before disassembling work.

Procedure:

Step	Procedure		Points
1 Removing the drain pan			
1	Remove the drain socket cap to discharge water.	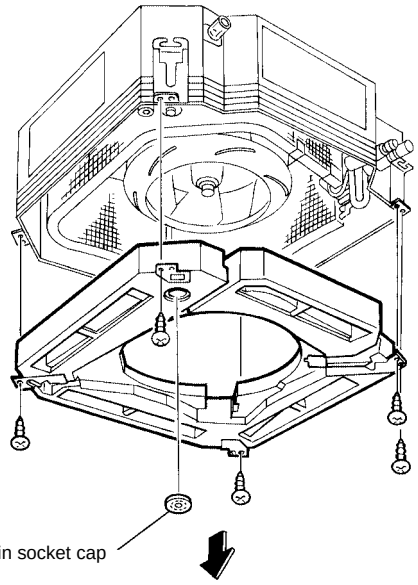	
2	Remove the 5 mounting screws to pull the drain pan out downward.		

5

Step	Procedure		Points
2	Removing the drain pump	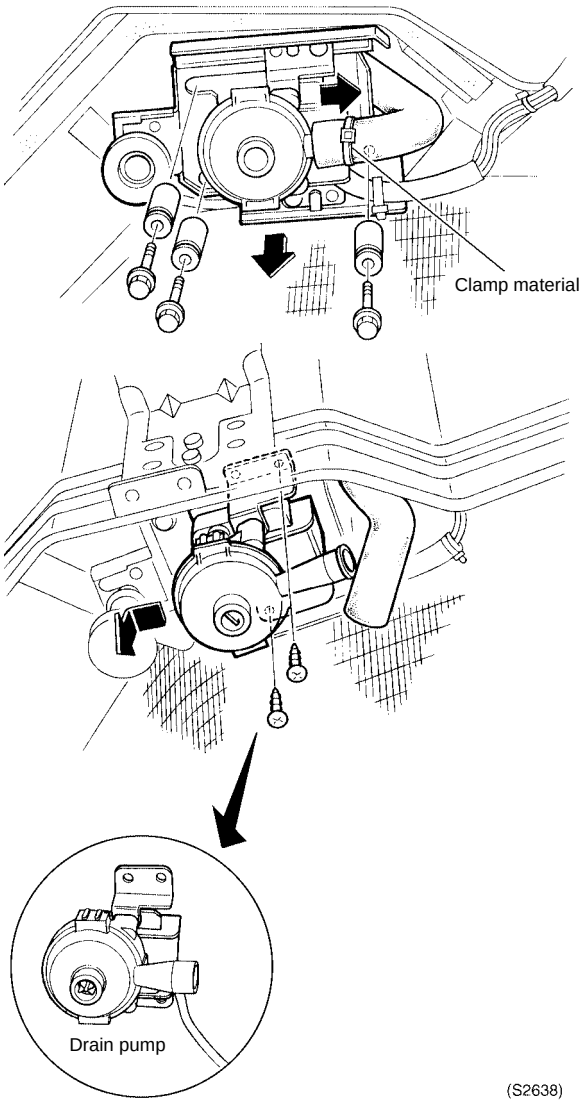	■ When removing the drain pump, cut the following clamp materials. ● Clamp material securing the drain pump lead wire to the drain pump mounting plate. ● Clamp material bundling the drain pump lead wire and float switch lead wire.
1	Cut the clamp material.		
2	Pull the drain hose out.		
3	Remove the 3 screws on the drain pump mounting plate.		
4	Remove the 2 mounting screws on the drain pump.		
5	Displace the drain pump sideward to remove it.		
3	Removing the float switch	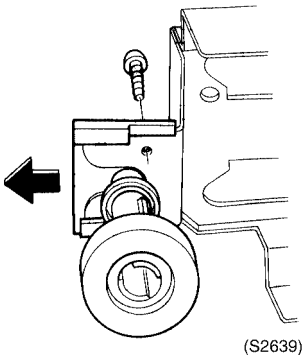	■ When removing the float switch, cut the following clamp materials. ● Clamp material securing the drain pump lead wire to the drain pump mounting plate. ● Clamp material bundling the drain pump lead wire and float switch lead wire.
1	Reverse the drain pump mounting plate which was removed according to the procedure described on the preceding page.		
2	Remove the 1 screw, displace the float switch sideward, then dismount the float switch.		

5

Step	Procedure	Points
[Installation procedure of drain pump or float switch]		
1	Install a spare drain pump or float switch on the mounting plate, then firmly secure the lead wires using the provided clamp materials (3 pieces).	
2	Connect the lead wires of the drain pump or float switch in the original state, firmly secure the aforementioned clamp materials (screw type fixing) to the drain pan with the use of mounting screws.	

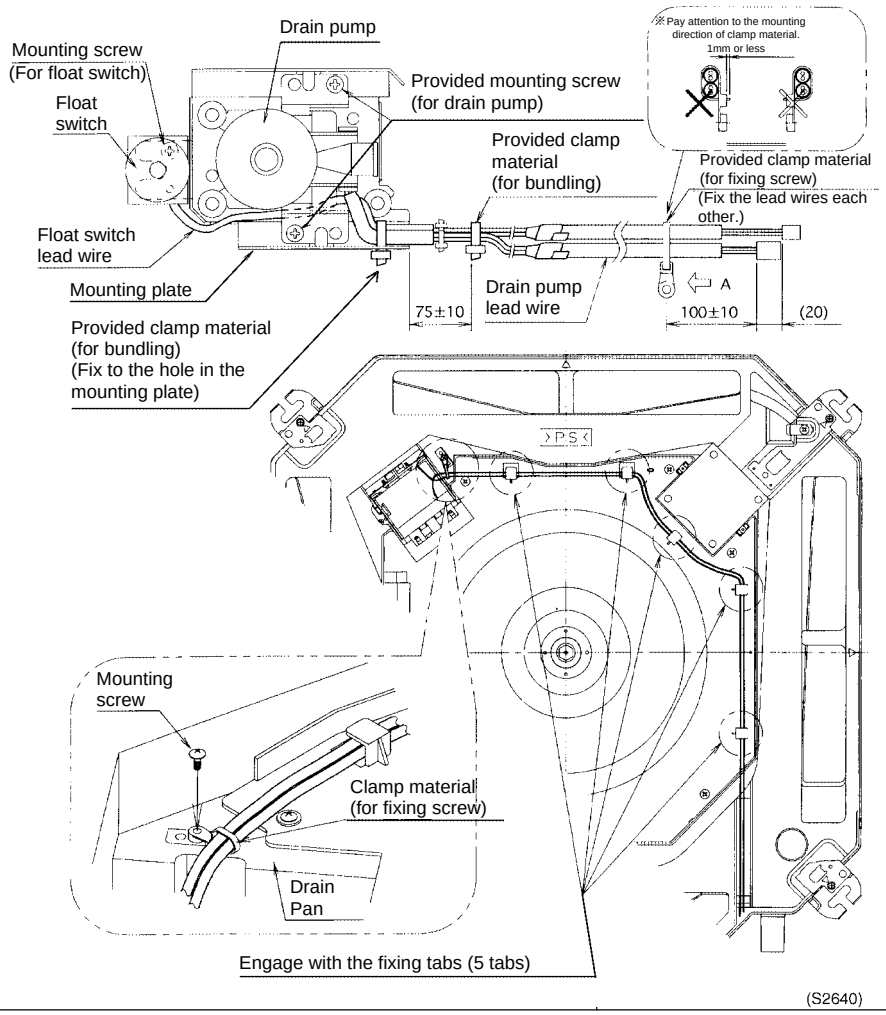

5

1.11.11 Removal of Heat Exchanger Temperature Thermistor

Warning Be sure to wait 10 minutes or more after turning off all power supplies before disassembling work.

Procedure:

Step	Procedure	Points
■ Remove the drain pan according to the procedure for removing the drain pan.	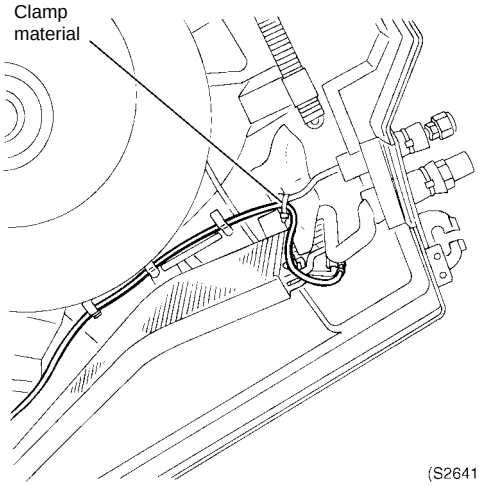	
1 Cut the clamp material. 2 Draw the heat exchange temperature thermistor together with the insulation material out in the direction shown by the arrow.	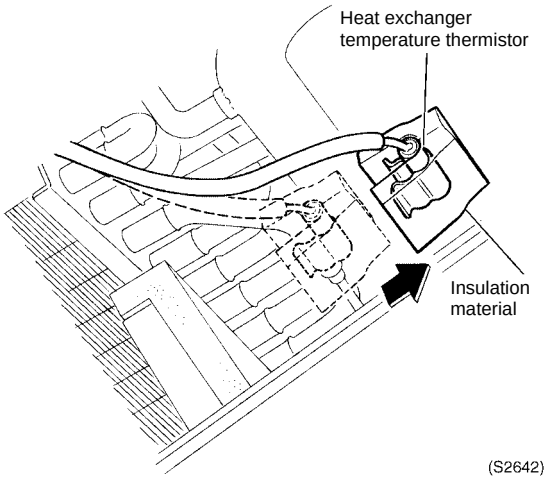	

5

1.12 FFQ25, 50, 60B

Overview

This part contains the following topics:

Topic	See page
Removal of Suction Grille	5–43
Removal of Air Filter	5–44
Removal of Decoration Panel	5–46
Removal of Horizontal Vane	5–49
Removal of Swing Motor	5–51
Removal of Switch Box	5–53
Removal of Fan Rotor and Fan Motor	5–55
Removal of Drain Pan	5–58
Removal of Drain Pump	5–59
Installation of Drain Pump	5–61
Replacement of Heat Exchanger Thermistor	5–64
Replacement of Heat Exchanger	5–66
Replacement of PC Board	5–72
Replacement of Receiver Section of infrared remote control	5–76

1.12.1 Removal of Suction Grille

Warning Be sure to wait 10 minutes or more after turning off all power supplies before disassembling work.

Procedure:

Step	Procedure		Points
1 Removing the suction grille			
1	To remove the suction grille, slide the two tabs simultaneously and pull the suction grille down slowly. ■ The grille can be installed freely in four directions.	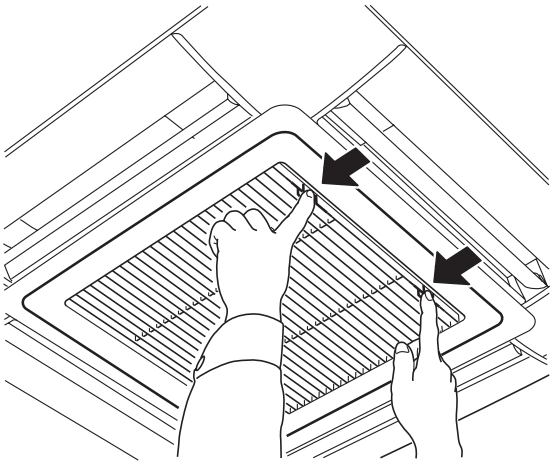 (S2630)	■ When closing, push up the grille slowly.
2	With the suction grille open at an angle of 45°, lift it up to remove it.	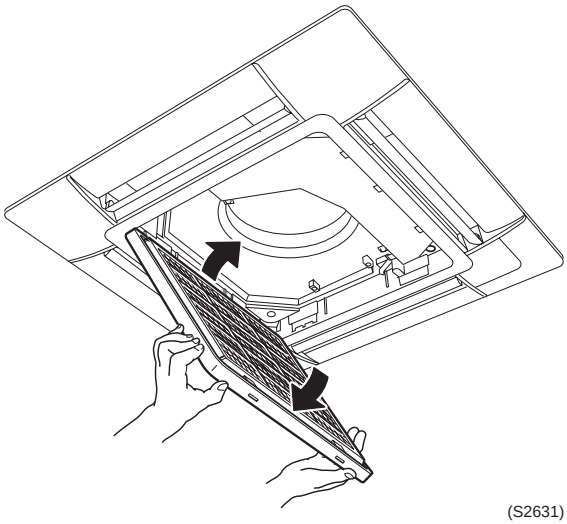 (S2631)	

5

1.12.2 Removal of Air Filter

Warning Be sure to wait 10 minutes or more after turning off all power supplies before disassembling work.

Procedure:

Step	Procedure		Points
1 Removing the air filter			
1	Open the suction grille. (See "Removal of Suction Grille".)	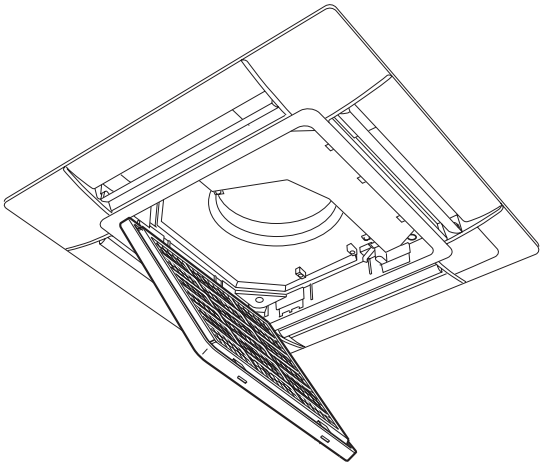 (S2632)	
2	Disengage the hooks of the air filter by pulling the filter downward at an angle, and remove the filter.	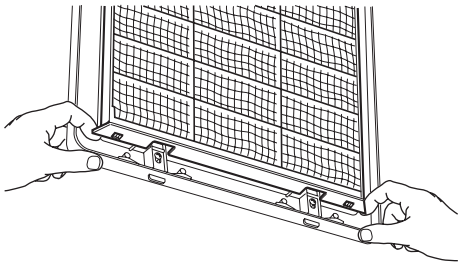 (S2633)	

5

Step	Procedure		Points
2 Installation of the air filter			
1	Hook the air filter to the protrusions located at the top of the suction grille.	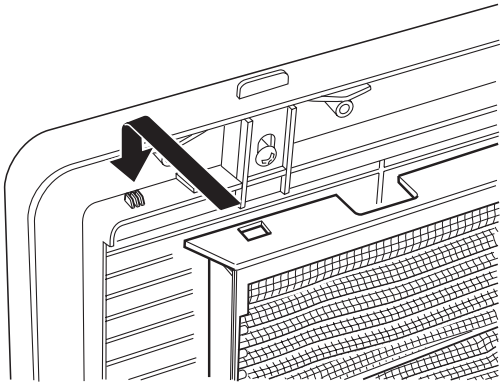 (S2634)	
2	Push the lower section of the air filter into the protrusions located at the bottom of the suction grille to secure the air filter in place.	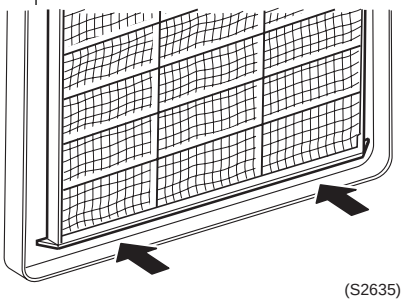 (S2635)	

5

1.12.3 Removal of Decoration Panel

Warning Be sure to wait 10 minutes or more after turning off all power supplies before disassembling work.

Procedure:

Step		Procedure	Points
1	Removing the decoration panel		
1	Remove the switch box cover and disconnect the connector of swing motor from the harness connector of electric parts.	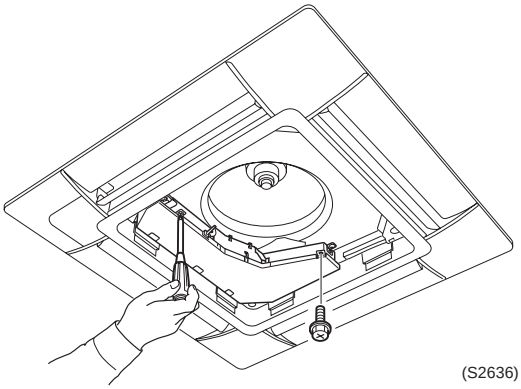 (S2636)	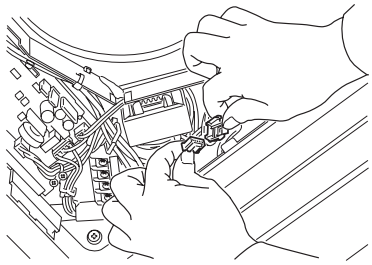 (S2637)
2	Check that the provisional hanger is in the position where it can be engaged with the hook of switch box.	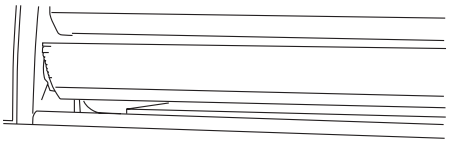 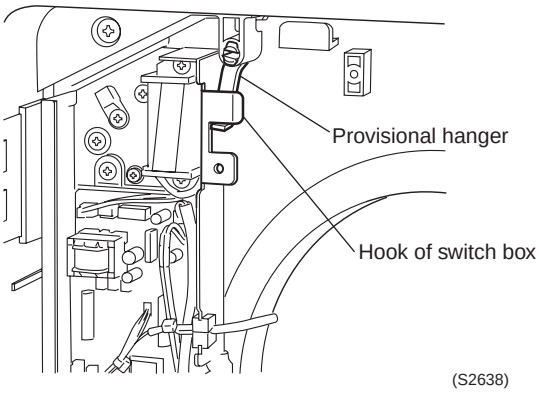 (S2638)	

5

Step	Procedure		Points
3	The decoration panel is attached with 4 mounting screws. Remove the two fixing screws at the switch box side first.	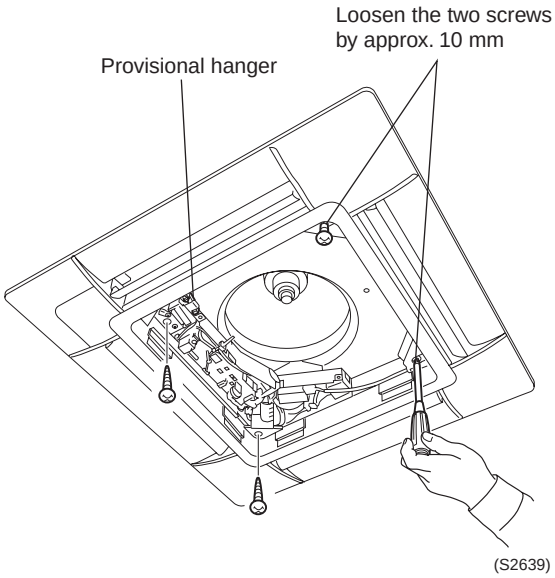	
4	Loosen the other two screws by approx. 10 mm. The decoration panel is hung with these two fixing screws and the provisional hanger.		

5

Step	Procedure		Points
5	Turn the provisional hanger to disengage it from the hook of switch box, and slide the decoration panel in the arrow direction to remove the panel.	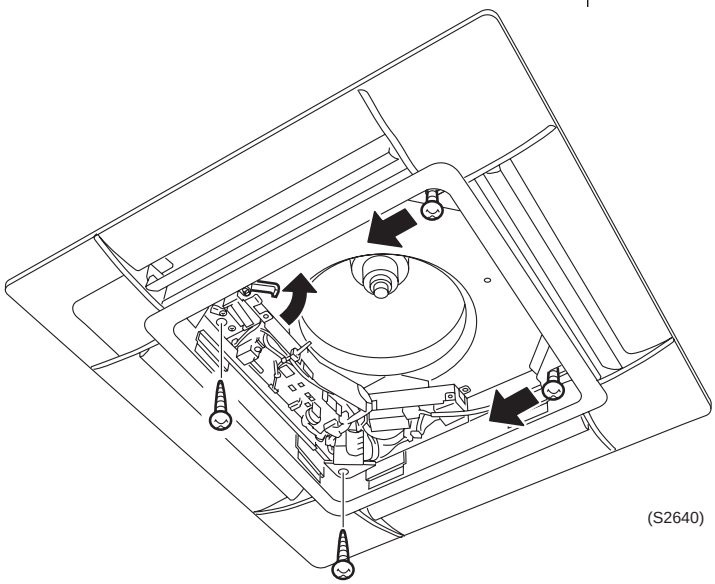 (S2640) 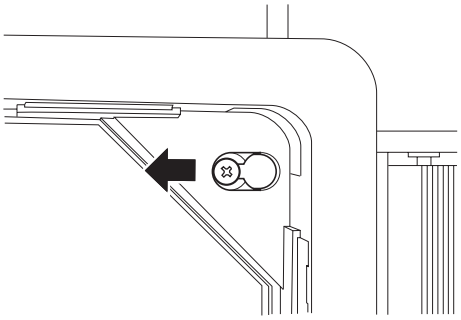 (S2641)	

5

1.12.4 Removal of Horizontal Vane

Warning Be sure to wait 10 minutes or more after turning off all power supplies before disassembling work.

Procedure:

Step	Procedure		Points
1	Removing the decoration panel ■ Refer to the "Removal of Decoration Panel"		
2	Remove the padding at four corners of frame fixed with three screws each. At that time, peel the end of black sealing material of discharge port in part.	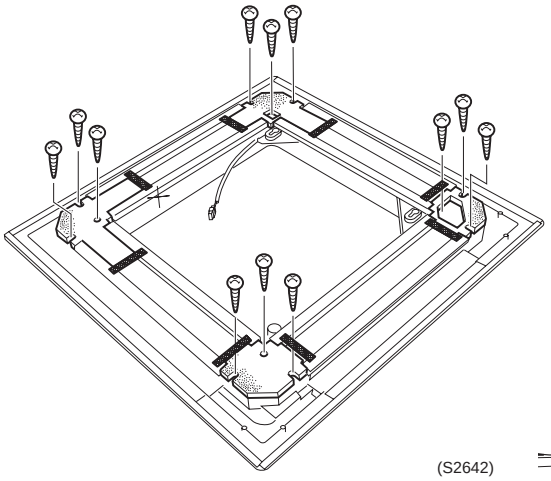 (S2642)	■ Peel not the anti-sweat material but only sealing material of discharge port. 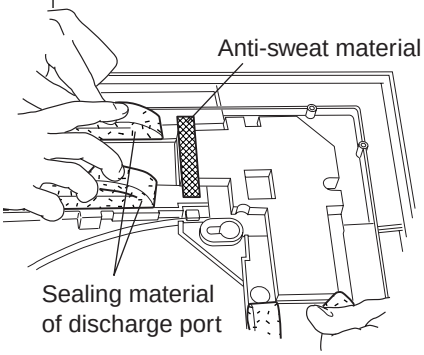 (S2643)
	Note: When restore the sealing material of discharge port, be careful that no clearance exists between padding and sealing material as original installation. (Otherwise, due dripping may occur due to leakage of cool air.)	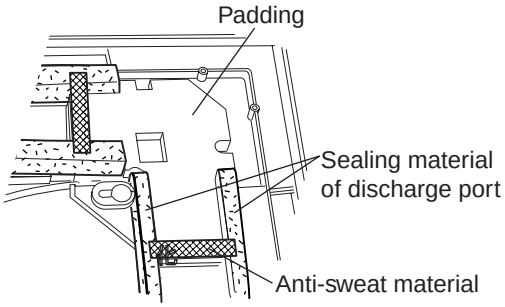 (S2644)	

5

Step	Procedure		Points
3	Remove the two screws for each bearing of horizontal vane (16 screws in total).	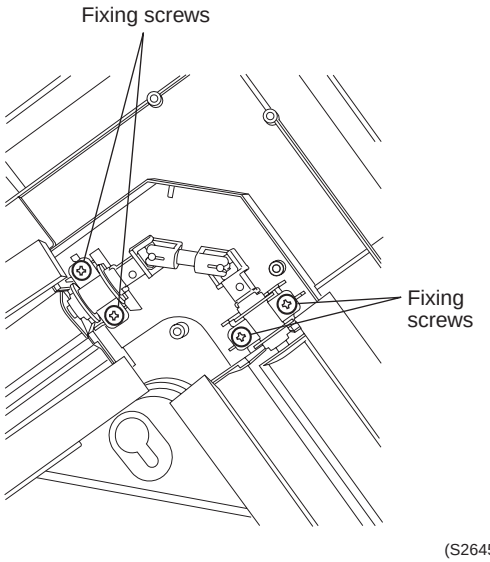	
4	Remove the horizontal vane.	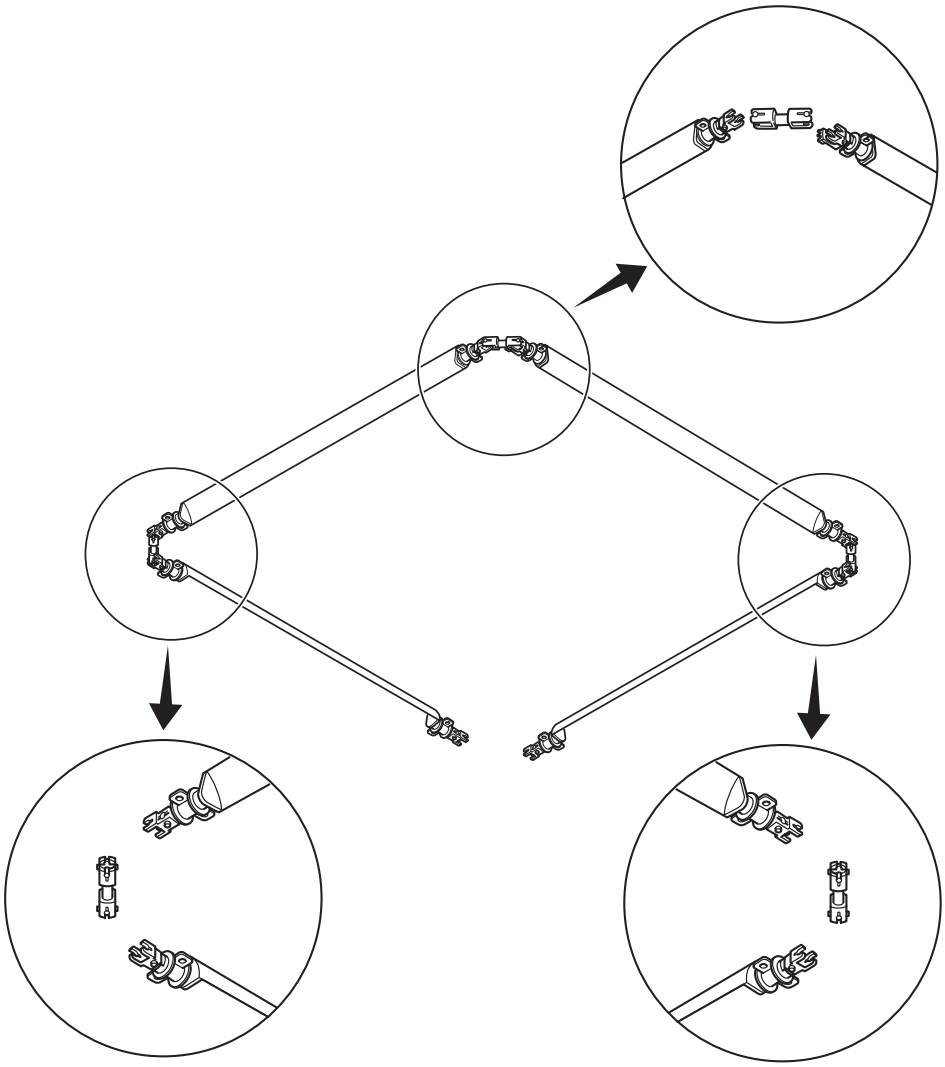	

5

1.12.5 Removal of Swing Motor

Warning Be sure to wait 10 minutes or more after turning off all power supplies before disassembling work.

Procedure:

Step	Procedure		Points
1	Removing the decoration panel ■ Refer to the "Removal of Decoration Panel"	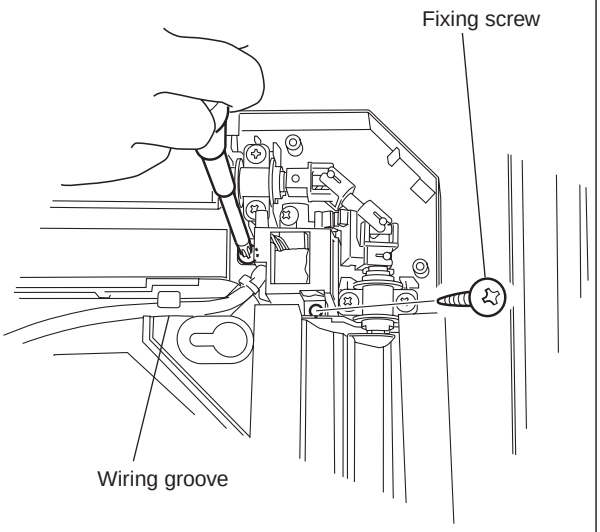 (S2647)	
2	Pull out the swing motor harness from the wiring groove.		
3	Remove two mounting screws for swing motor mounting plate to remove the plate.		
4	Turn the horizontal vane to downward manually, and turn up the panel side gear to disengage the motor side gear.		
5	Remove the swing motor.	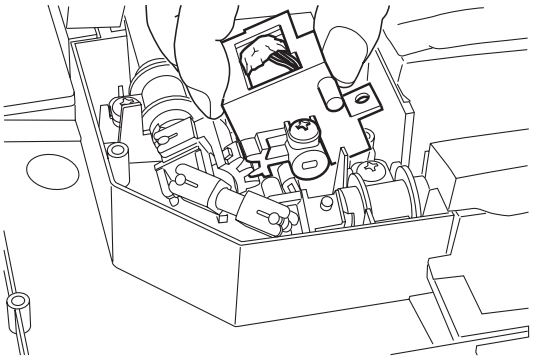 (S2648)	

5

Step	Procedure		Points
■ Precaution during swing motor insttallation			
1	Engage the swing motor-side gear with the panel-side one. (Otherwise, faulty swinging operation or abnormal noise may be caused.) Install the motor after checking of correct gear engagement.	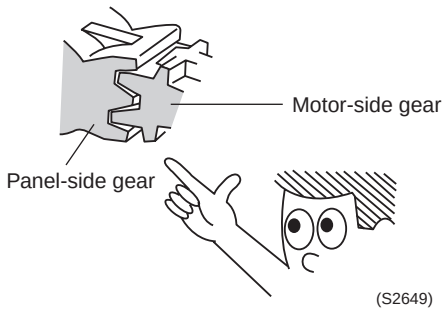	
2	Install the swing motor in reverse process of removal procedure.		■ When install the decoration panel, be careful not to catch the lead wire.
3	After installing the swing motor, be sure to turn on the power switch for resetting (for initializing the vane positions).		

5

1.12.6 Removal of Switch Box

Warning Be sure to wait 10 minutes or more after turning off all power supplies before disassembling work.

Procedure:

Step	Procedure	Points
Remove decoration panel first.		
1	Remove the lid of switch box. (Two pieces of M4 screws)	
2	Disconnect the connection wires for outdoor units and earth wire. At this time, cut the tie wrap fixing the connection wires. Disconnect wire of remote control also. At this time, cut the tie wrap fixing the wire of remote control.	

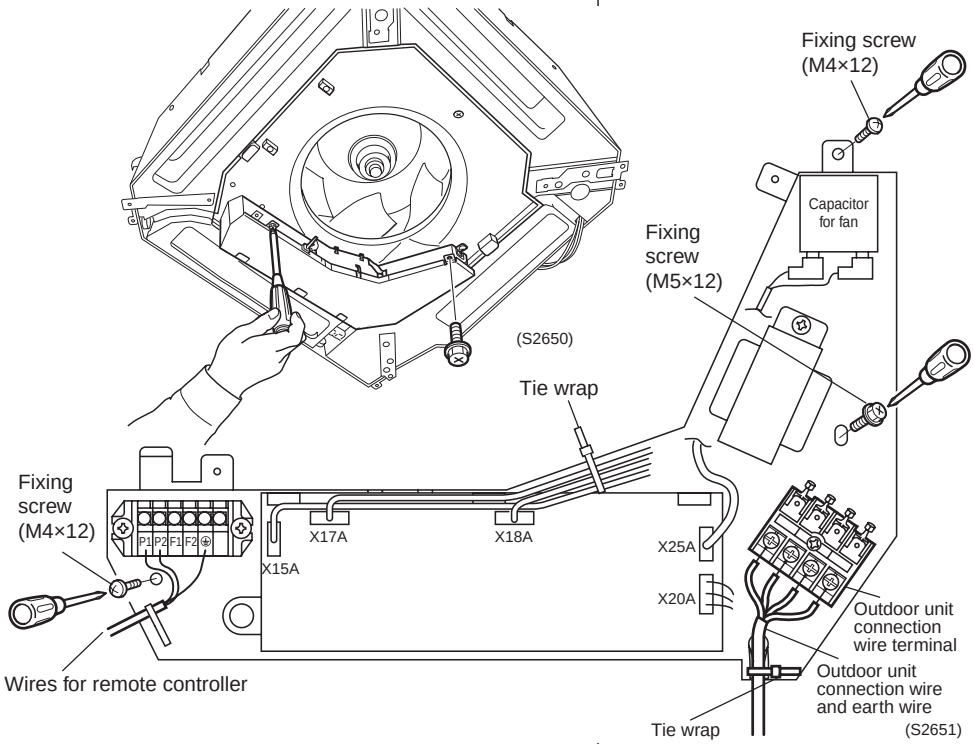

5

Step	Procedure	Points
3	Remove five pieces of lead wires from PCB on the switch box and lead wire connected to the capacitor for fan motor. (Refer to the list shown in the right.)	∗ Five pieces lead wires shown below (connect to the PCB) and lead wire connected to the capacitor for fan motor. X15A·····Lead wire of float switch X17A·····Lead wire of thermistor for heating X18A·····Lead wire of liquid pipe thermistor X20A·····Lead wire of fan motor X25A·····Lead wire of drain pump
4	Cut tie wraps fixing lead wires of float switch, thermistor for heating and liquid pipe thermistor.	
5	Remove two fixing screws located at both ends of switch box and one screw inside the box.	
6	Remove the switch box.	

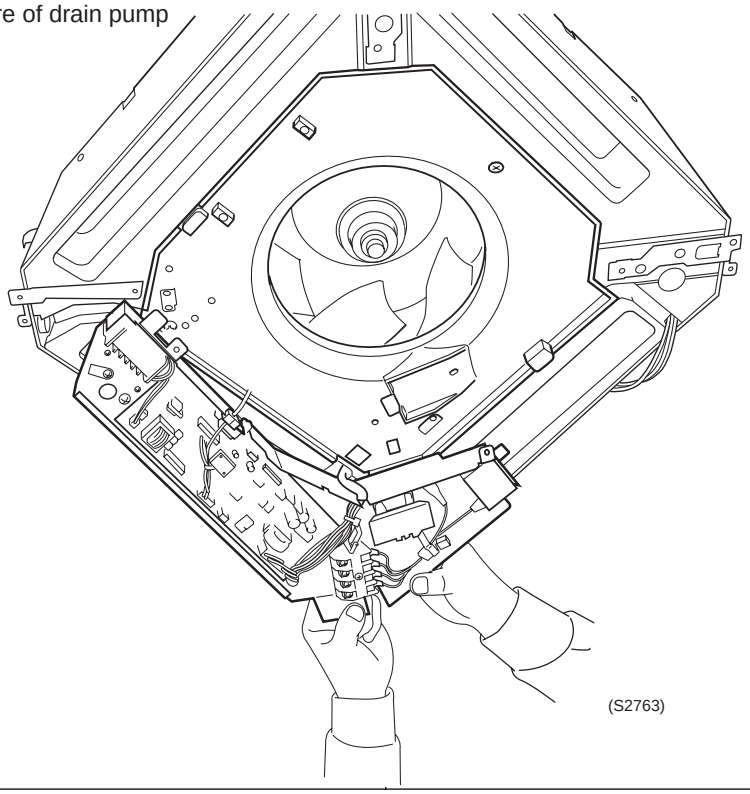

5

1.12.7 Removal of Fan Rotor and Fan Motor

Warning Be sure to wait 10 minutes or more after turning off all power supplies before disassembling work.

Procedure:

Step	Procedure	Points
■ Remove the switch box. ■ Remove the bell mouth (Two screws)	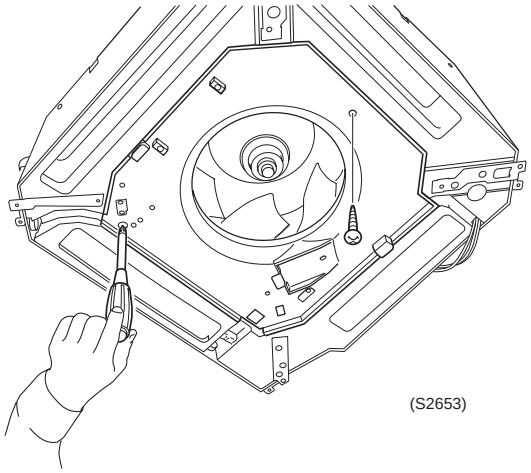	■ A convex protrusion is provided at the position of bell mouth fixing screw to prevent misjudgment with switch box fixing position. 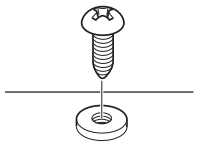
1 Removing the fan rotor		
1 Remove the resin nut and rotation stopper to dismount the fan rotor. 2 Remove the resin nut with spanner. 3 Pull down the fan rotor slowly.	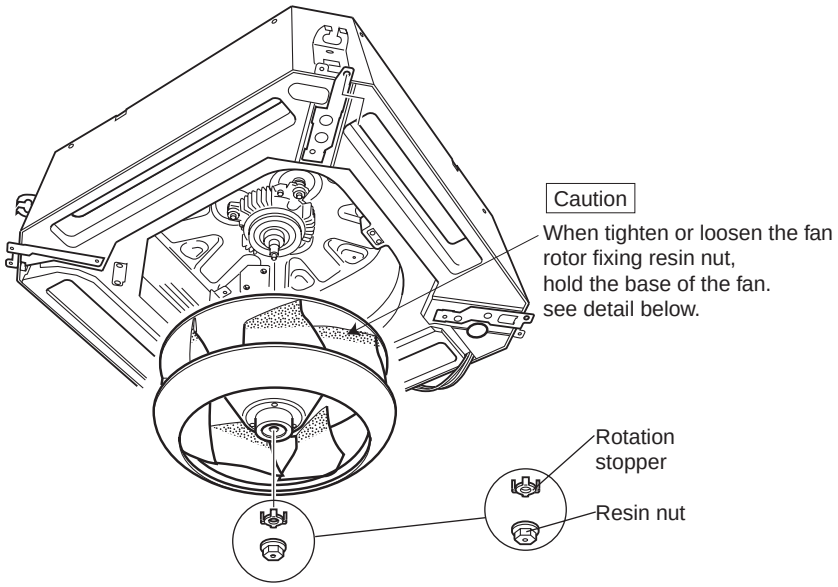	■ For removal of switch box, refer to the "Removal of Switch Box" on page 5-53.

5

Step	Procedure		Points
4	Make sure to hold the hub as shown in Fig.1 when tightening or loosening the fan fixing nut with a spanner.To avoid deformation and vibration of the fan, do not apply excessive torque to the shroud (the slash part of Fig.2). **Note:** There is no problem to hold the shroud when carrying or lifting the fan.	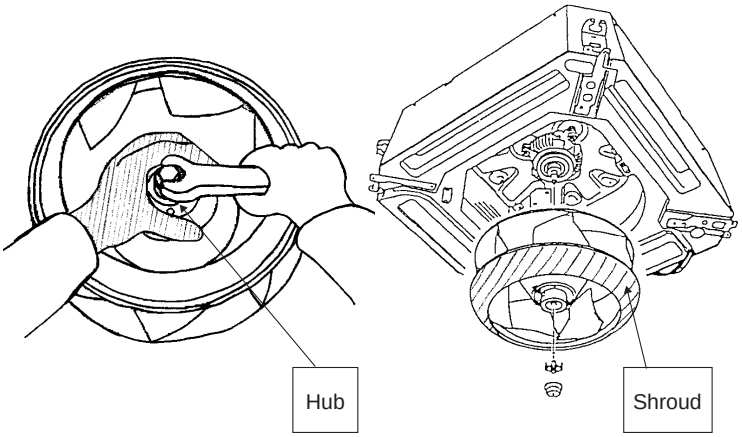 Fig. 1 Fan fixing method Fig. 2 Do not apply excessive torque to the area shown in slash (S2764)	
2 Removing the fan motor			
1	Disconnect the harness connector for motor from the motor.		
2	Remove the three washer faced bolts.	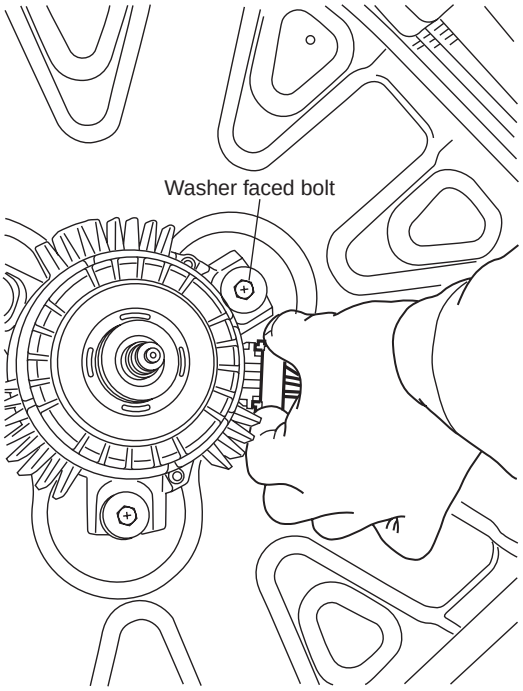 (S2656)	

5

Step	Procedure		Points
3	Pull down the fan motor slowly.	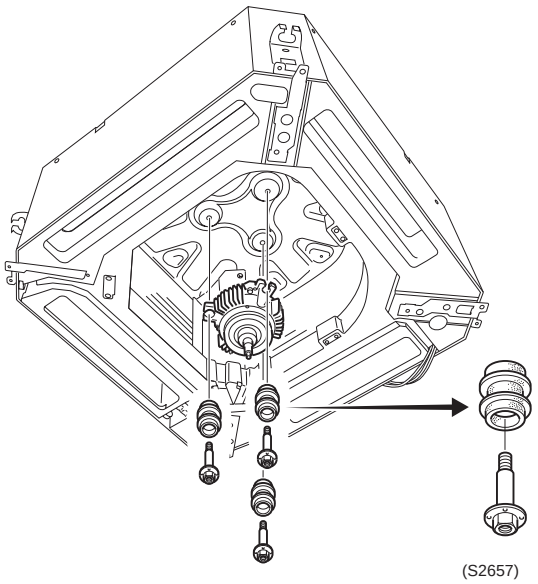 (S2657)	

1.12.8 Removal of Drain Pan

Warning Be sure to wait 10 minutes or more after turning off all power supplies before disassembling work.

Procedure:

Step	Procedure		Points
1	Remove the drain socket to drain water from the drain hole.		
2	Remove the 4 mounting screws to remove the drain pan.	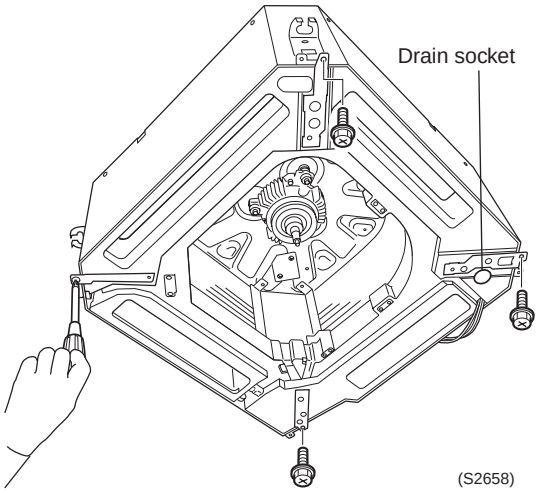	■ Remove the drain socket to drain water from the drain hole. ■ If water is in the drain pan, it can spill and wet the floor. Drain water completely or cover the floor with a vinyl sheet before removing the drain pan.
3	Pull down the drain pan straight down.	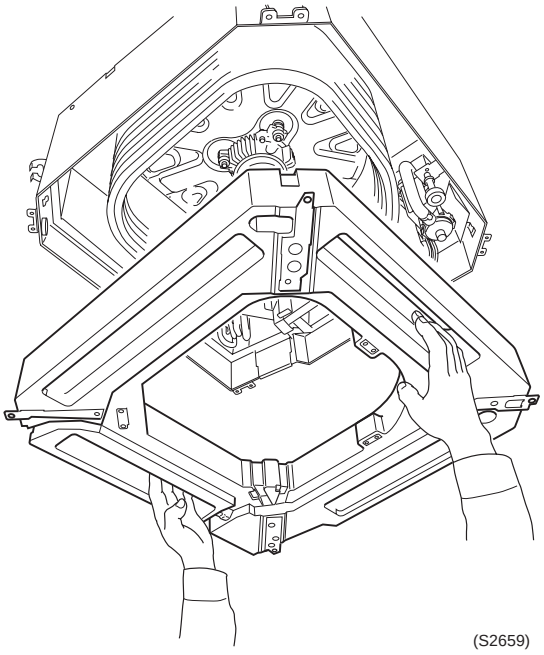	

5

1.12.9 Removal of Drain Pump

Warning Be sure to wait 10 minutes or more after turning off all power supplies before disassembling work.

Procedure:

Step	Procedure		Points
1	Removing the drain pump		
1	Remove two screws fixing float switch ass'y. (Screw②and③)	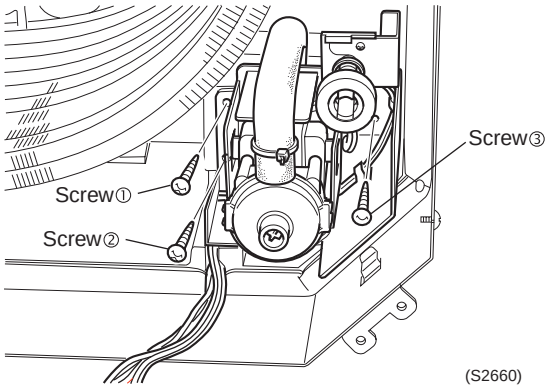	
2	Remove the float switch ass'y.	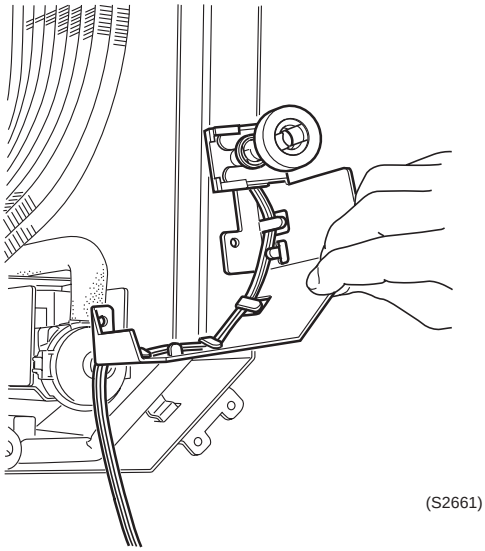	■ Remove the float switch before removing drain pump in order to prevent the float switch from damage.

5

Step	Procedure		Points
3	Cut the tie wrap fixing the drain hose. Remove the screw ①	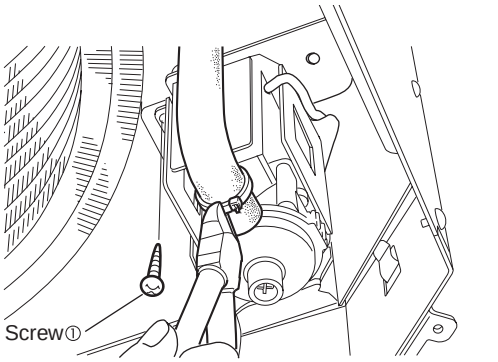 (S2662)	■ When pulling out the drain hose, be sure to wear safety gloves to prevent your finger from injury with heat exchanger fin. 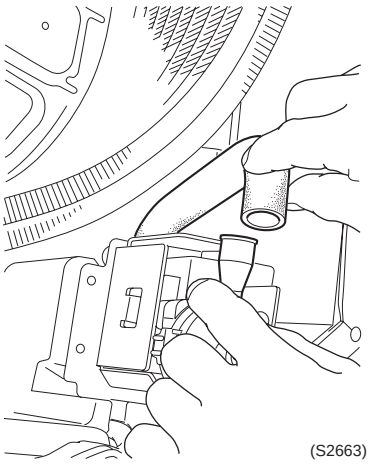 (S2663)
4	Pull out the drain hose.		
5	Remove the drain pump.	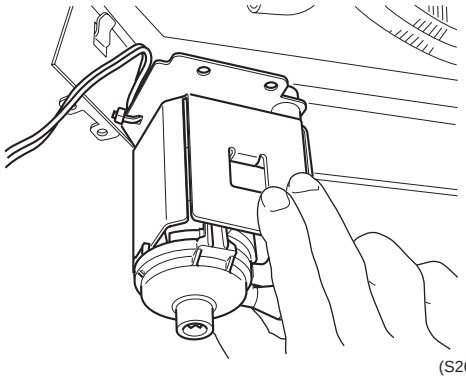 (S2664)	

5

1.12.10 Installation of Drain Pump

Warning Be sure to wait 10 minutes or more after turning off all power supplies before disassembling work.

Procedure:

Step	Procedure		Points
1 Installing the drain pump			
1	Put the lead wire in the wiring groove properly, fix the drain pump ass'y with screw ① and insert the drain hose.	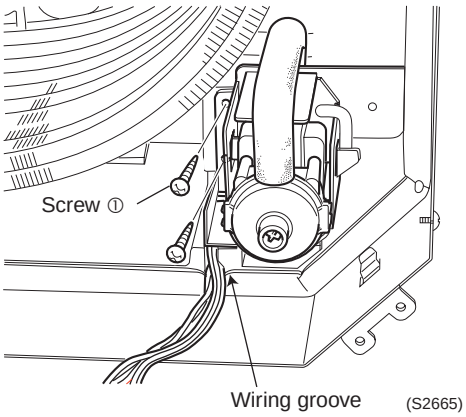	

5

Step	Procedure		Points
2	Insert the drain hose into the hose plug of the drain pump up to the root of plug securely.	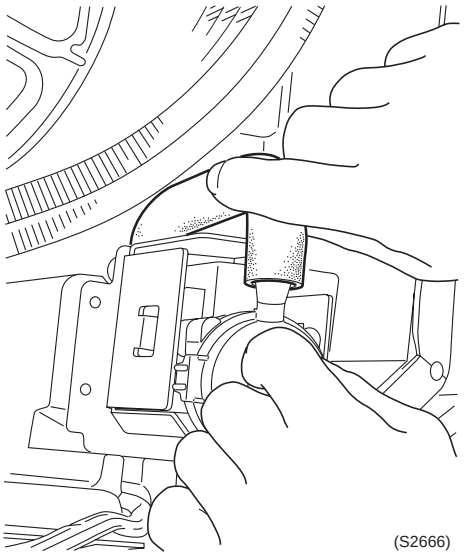 (S2666) 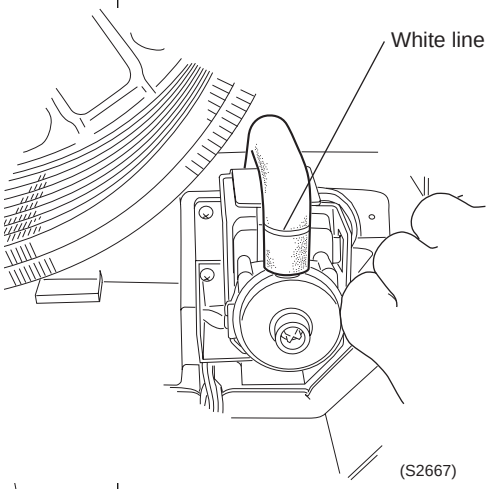 (S2667)	■ Inserting the drain hose should be executed before installation of float switch in order to prevent the float switch from damage. ■ Put the tie wrap on the white line on the hose inserted.
3	Put the tie wrap on the hose.	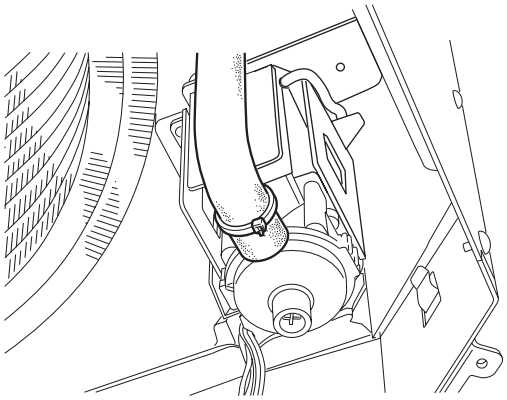 (S2668)	■ When inserting the drain hose, be sure to wear safety gloves to prevent your finger from injury with heat exchanger fin.

5

Step	Procedure		Points
4	Insert the float switch ass'y. At this time, put the lead wires in the wiring groove properly.	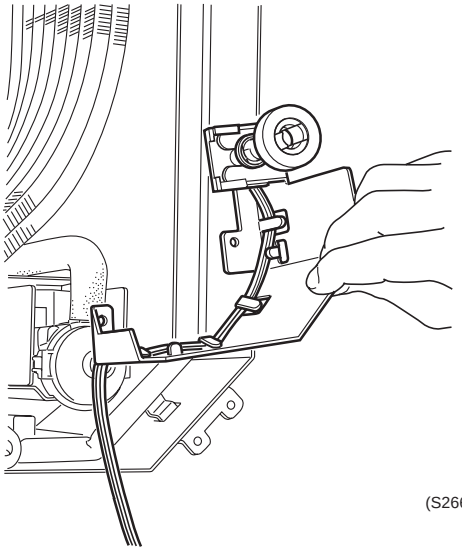	
5	Install the drain pump together with the float switch with screw ② and ③. When install the drain pan, put the lead wires of float switch and drain pump in wiring groove and pass the lead wires above on the black sealing material on the drain pan. (Otherwise, due dripping may occur due to leakage of cool air.)	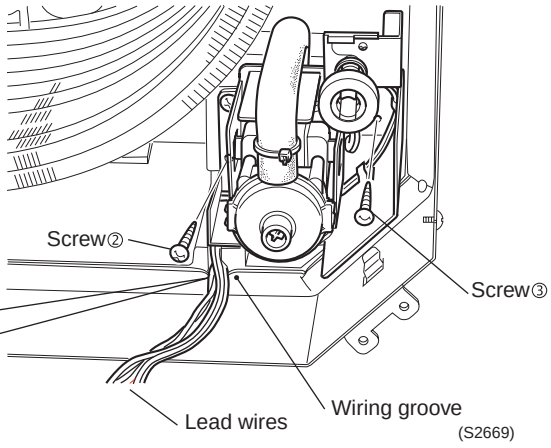	

5

1.12.11 Replacement of Heat Exchanger Thermistor

Warning Be sure to wait 10 minutes or more after turning off all power supplies before disassembling work.

Procedure:

Step	Procedure		Points
1	Disconnect the grounding terminal from the header.	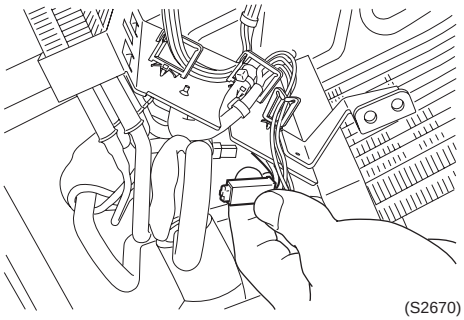 (S2670)	
2	Pull apart the thermistor ass'y and motor lead wire from the clamps.	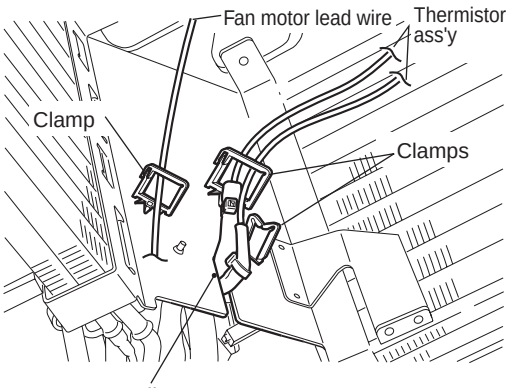 (S2671)	
3	Pull out the thermistor from the slit of heat exchanger partition plate.		
4	Remove two screws to the top panel, then, pull the partition plate of heat exchanger downward.	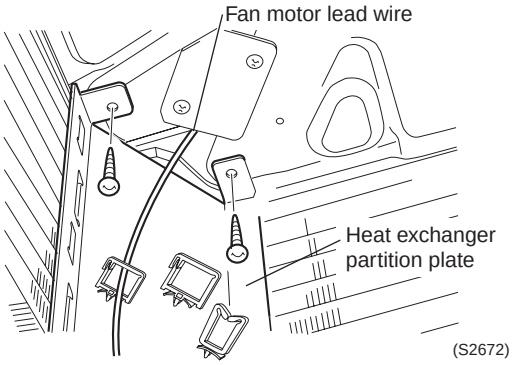 (S2672)	

Step	Procedure		Points
5	Take out the two tie wraps fixing the anti sweat tube of header and thermistor. (Be sure not to take out other tie wrap.)	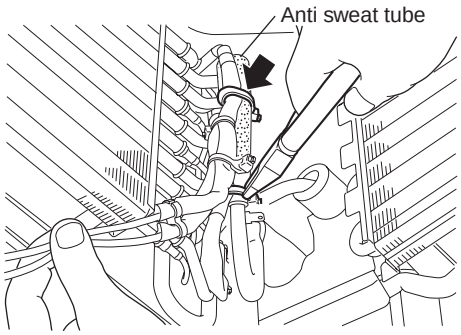 (S2673)	■ Heat resistance tie wrap is used. Be sure to use a heat resistance tie wrap when installing new thermistor. ∗ Heat resistance tie wrap Parts No. :1278921 (Drg No. :4SA90202-1)
6	Pull out the thermistor from the insertion pipe. Thermistor for heating : The upper one wrapped with a yellow tape Thermistor for liquid pipe : The lower one without taping	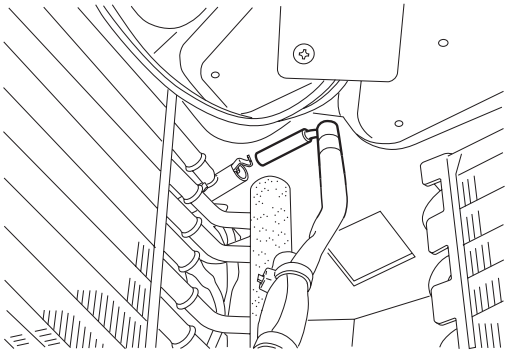 (S2674)	■ Replace thermistor as an ass'y. (Two thermistors are bound with special heat resistance tube.)

5

1.12.12 Replacement of Heat Exchanger

Warning Be sure to wait 10 minutes or more after turning off all power supplies before disassembling work.

Procedure:

Step	Procedure		Points
1	Removing the heat exchanger		
1	Remove the refrigerant pipe after completion of refrigerant collection and pump down operation.		■ This work should be performed with two personnel including one person for supporting the heat exchanger to avoid falling down during the work.
2	Remove the fixing plate of heat exchanger.	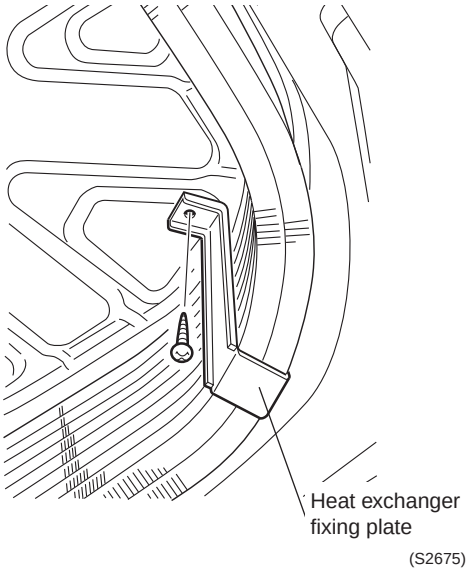 (S2675)	
3	Remove the pipe fixing plate mounted with two screws.	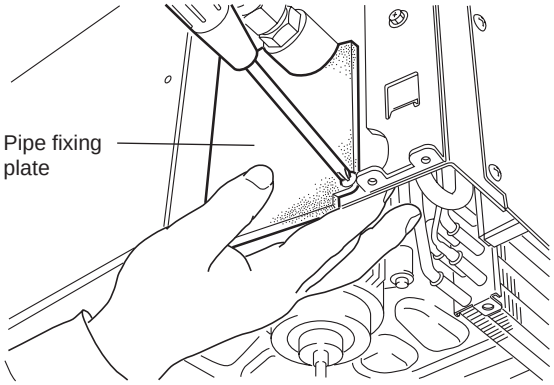 (S2676)	

5

Step	Procedure		Points
4	Remove the heat exchanger.	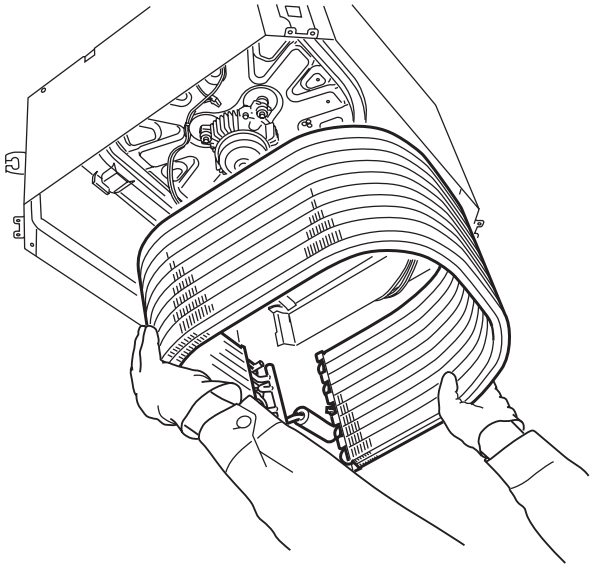 (S2677)	
2	Installing the heat exchanger		
1	Insert the heat exchanger in the groove of ceiling polystyrene foam properly, and bring the tube plate section of heat exchanger into intimate contact with the polystyrene partition plate correctly.	Groove of ceiling polystyrene foam. 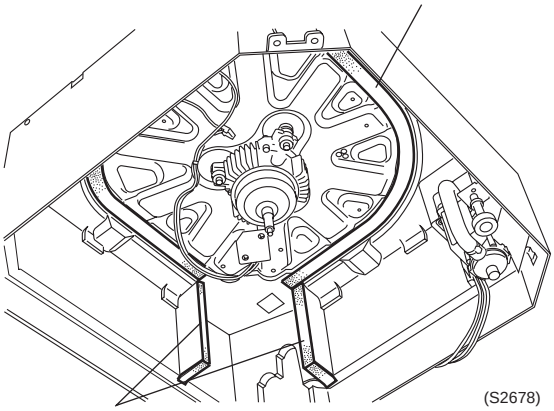 (S2678) Polystyrene partition plate for heat exchanger tube plate	
2	Insert the claw section of pipe fixing plate into the contracted part of the external plate securely.	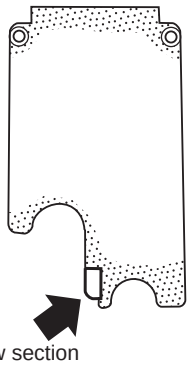 Claw section (S2679)	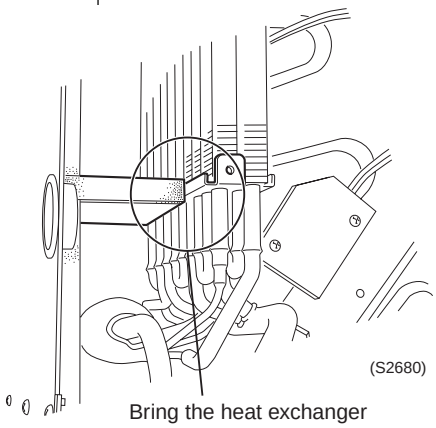 (S2680) Bring the heat exchanger tube plate section into intimate contact with polystyrene partition plate without clearance.

5

Step	Procedure		Points
3	Install the heat exchanger mounting plate.	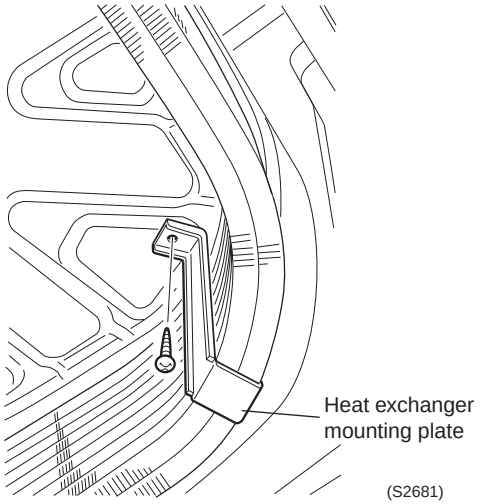	
4	Insert two thermistors. Then cover the header by anti sweat tube.	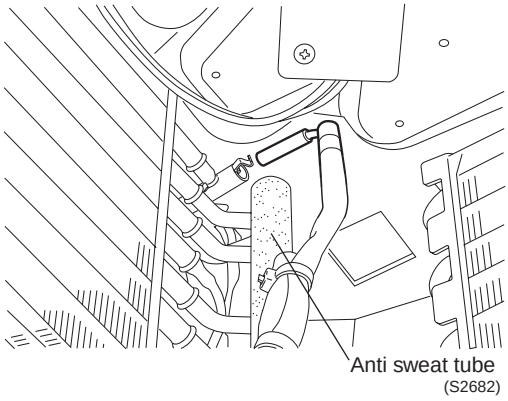	■ Set the lead wire with yellow tape (for heating) upper side while that with no tape (for liquid) lower side.
5	Reinstall the lead wire of thermistor and anti sweat tube on the original position by using two pieces of heat resistance tie wrap.	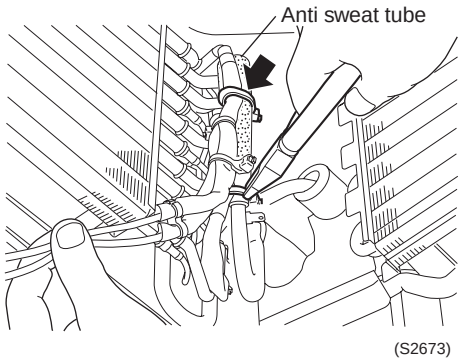	∗ Heat resistance tie wrap Parts No.:1278921 (Drg No.:4SA90202-1)

Step	Procedure		Points
6	Put the heat exchanger partition plate inside and fix them with two screws.	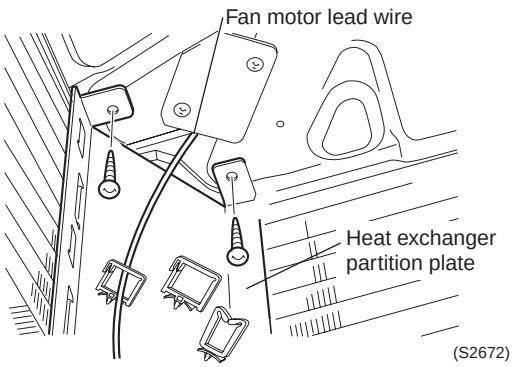	
7	Pass the thermistor ass'y through the clamps and the slit of partition plate securely as the original state. Pass the lead wire of motor also through the clamp securely.	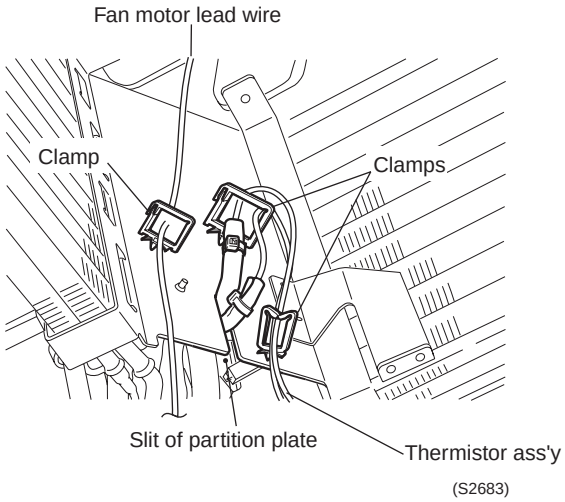	
8	Insert the grounding terminal to the header.	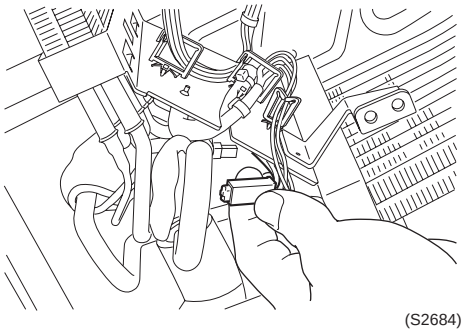	

5

Step	Procedure		Points
9	Install the drain pan putting the lead wire of float switch and drain pump into the wire groove securely. When install the drain pan, put the lead wires in wiring groove and pass the lead wires above the black sealing material on the drain pan securely. (Otherwise, due dripping may occur due to leakage of cool air.)	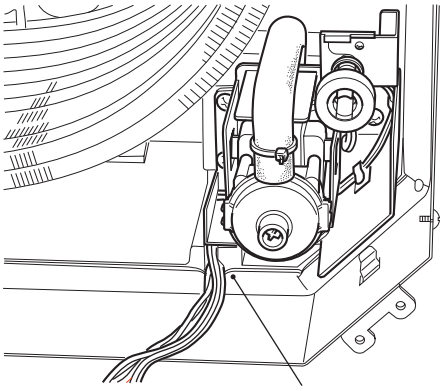 (S2685)	
10	Installing the bell mouth. When install the bell mouth, put the lead wires of fan motor and thermistor into the wiring groove securely as they were, taking care that the wires do not contact with fan rotor.	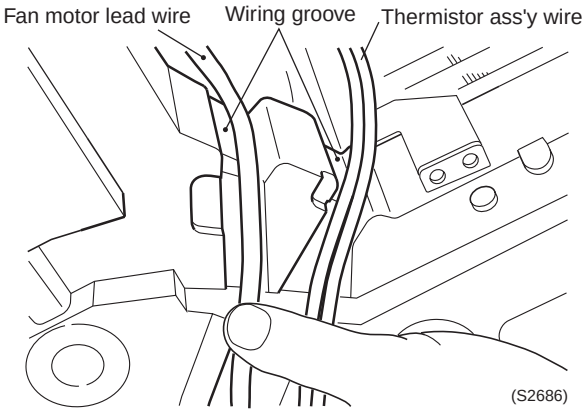 (S2686)	
11	Tighten the two screws to install the bell mouth. (Bell mouth is formed with step.)	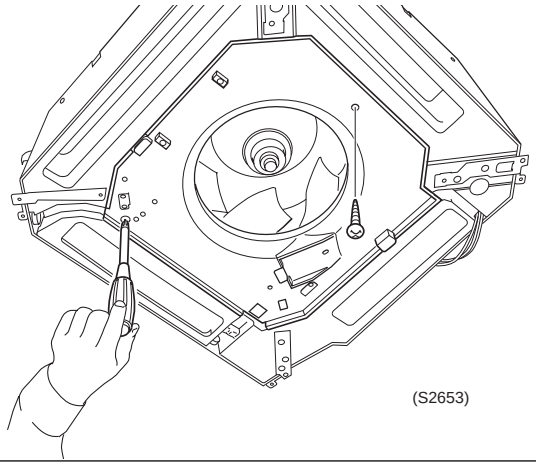 (S2653)	■ A convex protrusion is provided at the position of bell mouth fixing screw to prevent misjudgment with switch box fixing position. 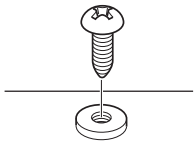 (S2654)

5

Step	Procedure		Points
12	Install the switch box with two M4 screws and one M5 screw.	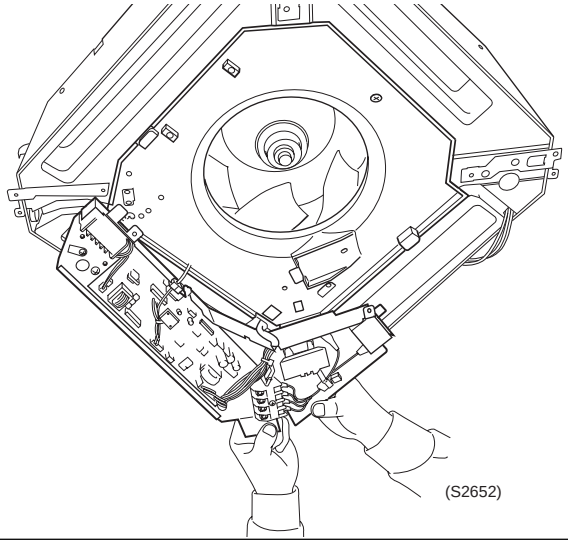	■ For installation of the switch box, refer to the "Removal of Switch Box" on page 5-53. ■ For re-wiring inside the switch box, refer to the "Replacement of PC Board" on page 5-72.

5

1.12.13 Replacement of PC Board

Warning Be sure to wait 10 minutes or more after turning off all power supplies before disassembling work.

Procedure:

Step	Procedure	Points
1 Removing the PC Board		
1	Remove the switch box cover. (M4 screw×2)	
2	Disconnect the connectors shown in the right connected to the PC board. Cut the tie wrap fixing the low tension cable (blue) to the switch box.	
3	Press two claws supporting the PC board to disengage one side of the PCB, then tilt the board and disconnect the lead wire for swing flap. (X36A)	

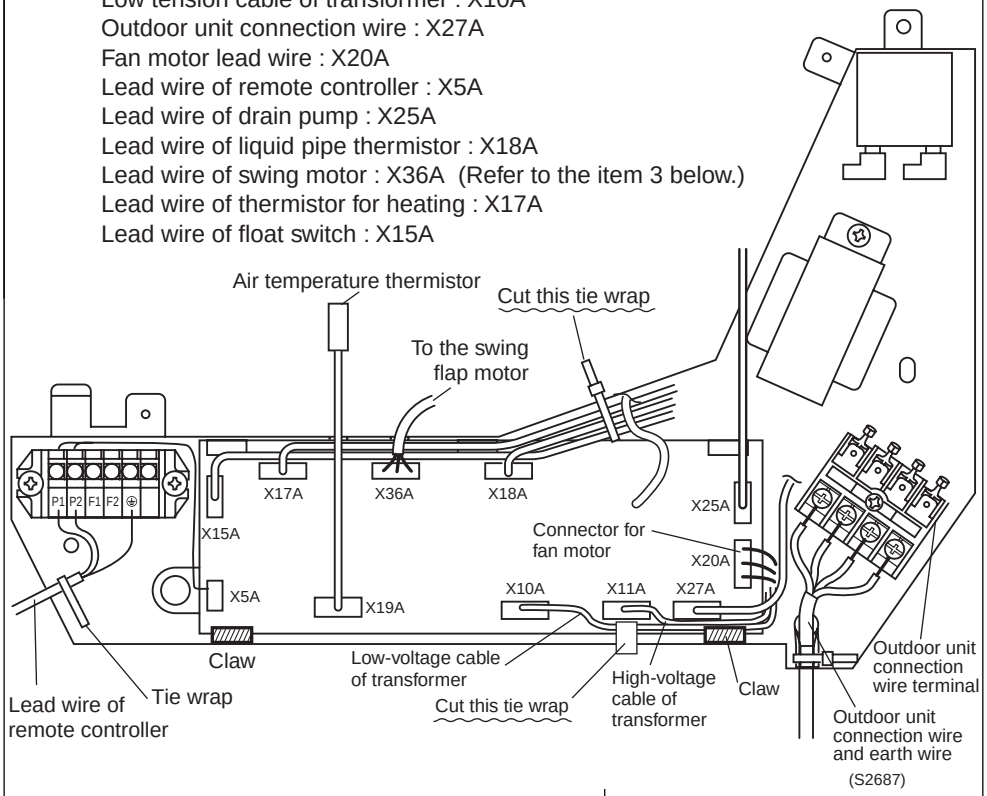

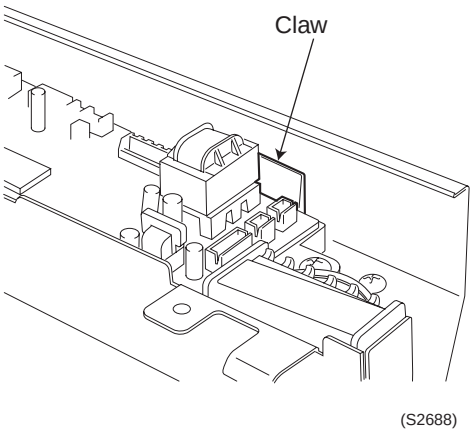

Step	Procedure	Points
2 Installing the PC board and re-wiring inside the switch box		
1	Engage the PC board with two claws shown in the right figure, push up the board until a click sound is generated, then connect the lead wires shown right.	
2	Next connect the lead wires in the route shown below and fix them with tie wrap in the following order. ① Connect the fan motor lead wire to the connector X20A. ② Connect the lead wire of capacitor for fan motor to the capacitor. ③ Insert the lead wire of drain pump to the connector X25A. ④ Connect the lead wire of float switch to X15A through the specified path and wire clamp 1. ⑤ Insert two thermistors to the connector matching the color with X17A and X18A through the wire clamp 1 (e.g. connect the wire with yellow tape to the yellow connector). Connect the lead wire of float switch and two pieces of wire of thermistor to the switch box by using tie wrap⑥. (Use tie wrap properly to prevent the wire from contact with hot part of the PC board.) Insert the rubber bushing of air temperature thermistor ⑦ into the slit of switch box. Then, check that it is connected to the connector X19A.	

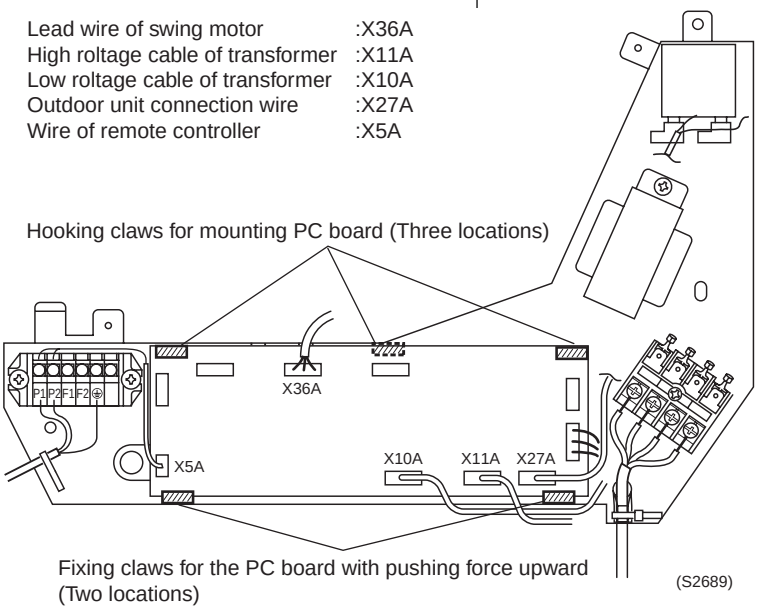

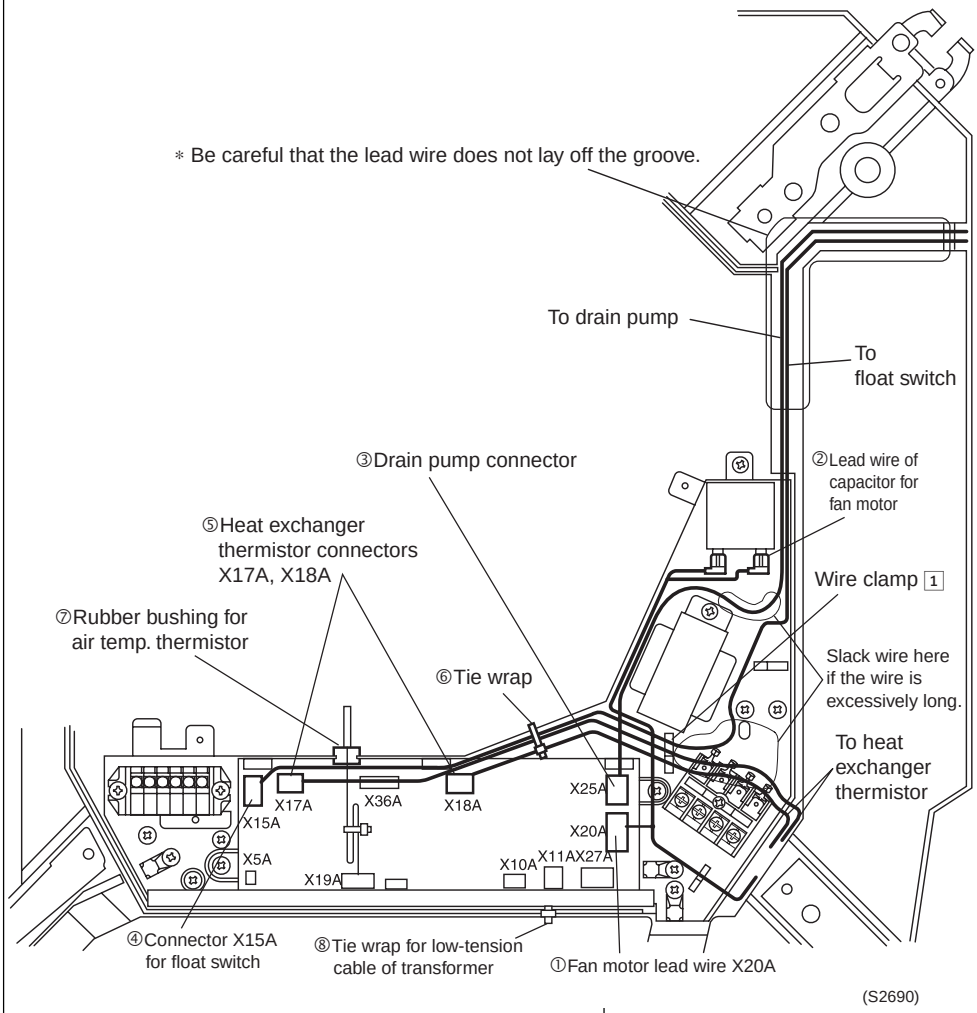

Step	Procedure		Points
3	Re-connect the outdoor unit connection wire, the earth wire and wire of remote control as they were, and fix them securely with tie wrap. (Only when install the switch box)	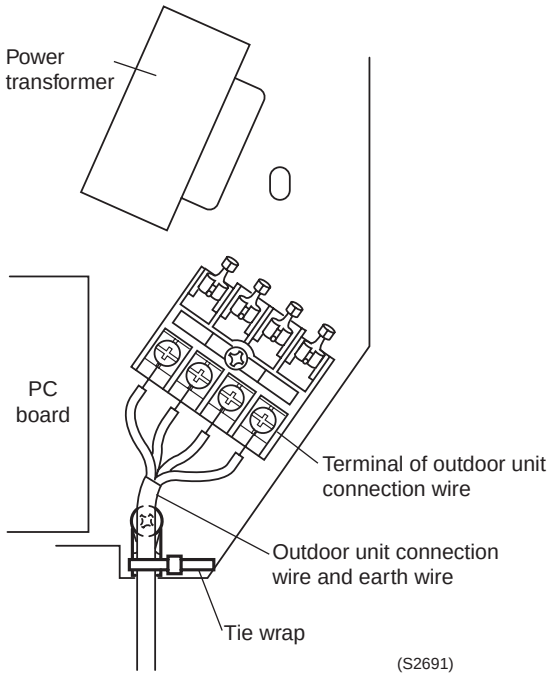	■ Be sure to fix the lead wire to be connected to the connector X10A for low-tension cable of transformer to the switch box with tie wrap ⑧. (The tie wrap is used for preventing the wire from contact with a hot part on the PC board.)
3 Installing the decoration panel			
1	Put the two holes on the decoration panel to the panel mounting screws and slide the panel, turn the stoppers to prevent the panel from falling down, then install the remainder two screws.	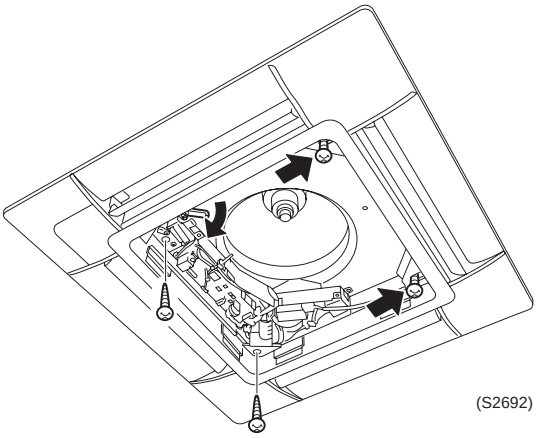	■ When installing the decoration panel, be careful not to catch the lead wire. 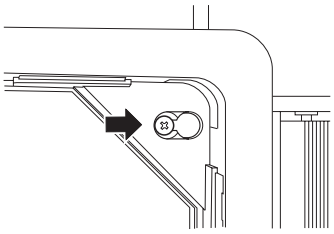

5

Step	Procedure		Points
2	Insert the lead wires of swing flap to the connector on the PC board.	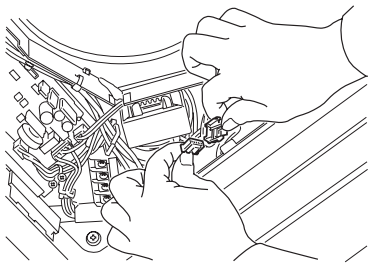 (S2637)	
3	Install the cover of switch box and the grille.	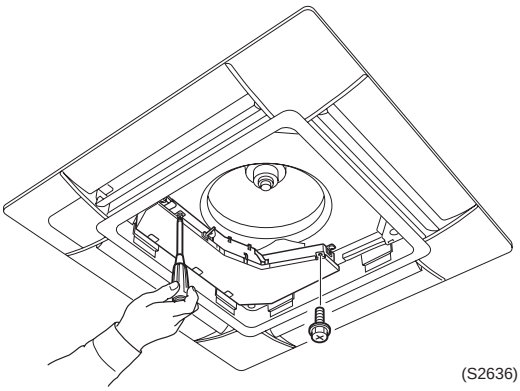 (S2636)	

5

1.12.14 Replacement of Receiver Section of infrared remote control

Warning Be sure to wait 10 minutes or more after turning off all power supplies before disassembling work.

Procedure:

Step	Procedure	Points
1 Removing the receiver section		
1	Remove two screws of the transmission parts box to remove the box.	
2	Cut the tie wrap fixing transmission parts box and harness and disconnect the connector X1A.	
3	Disconnect the lead wire of the transmission parts box from the connector X24A on the indoor unit PC board.	

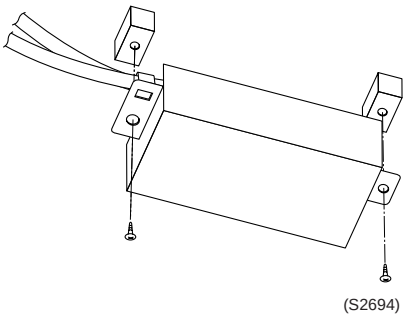
(S2694)

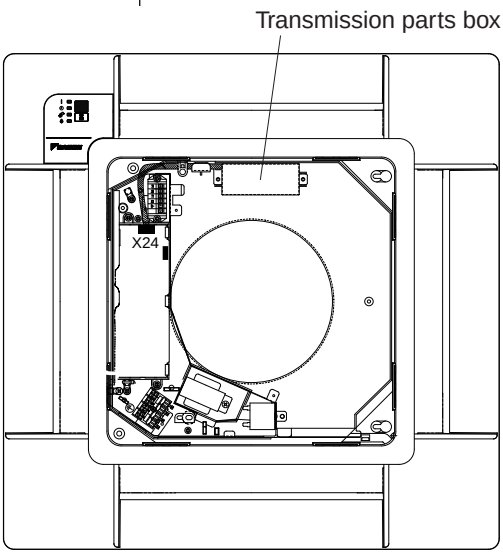

(S2695)

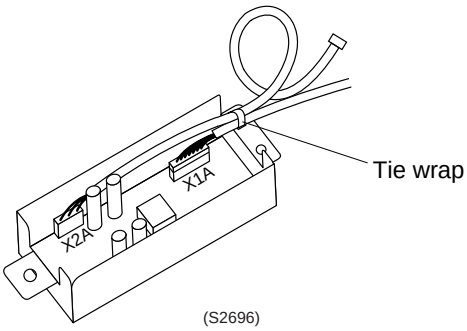

(S2696)

5

Step	Procedure	Points
4	Removing the decoration panel ■ Refer to "Removal of Decoration Panel"	
5	Pull out the lead wire of receiver section from wiring groove.	
6	Push three claws on the rear side of panel to remove the corner cover (receiver section).	
2	Installing the receiver section	
1	Pass through the lead wire of the receiver section, and insert the corner cover.	
2	Put the wire in the wiring groove on the hooking piece securely.	

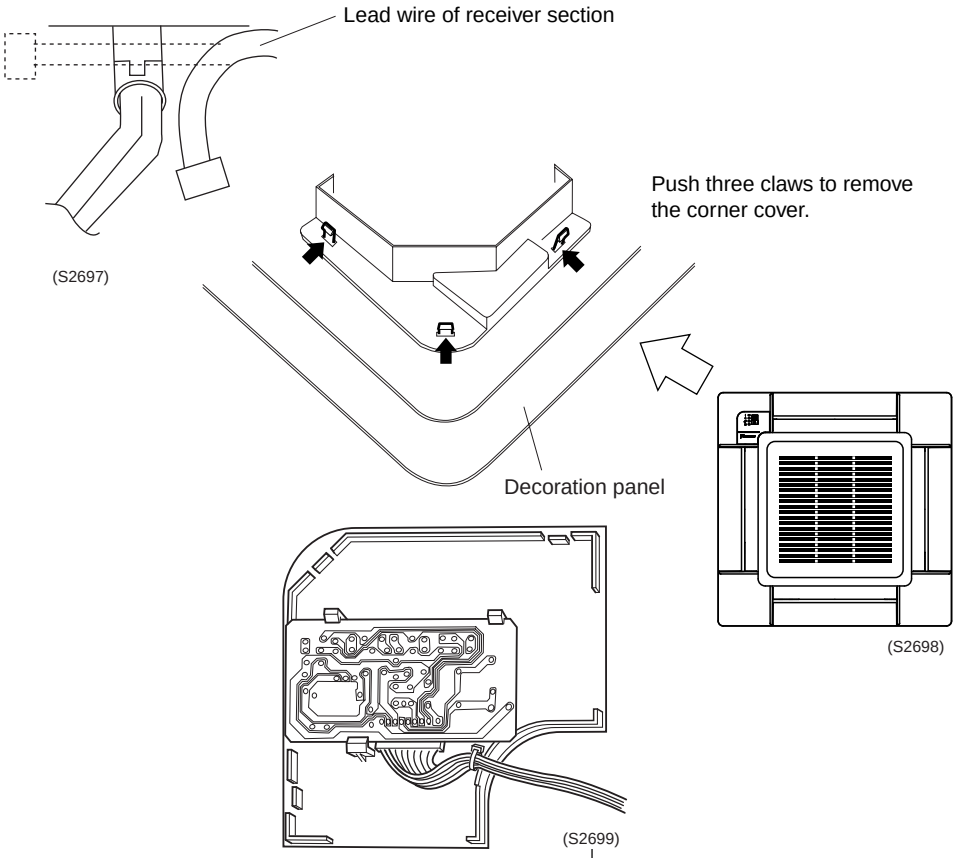

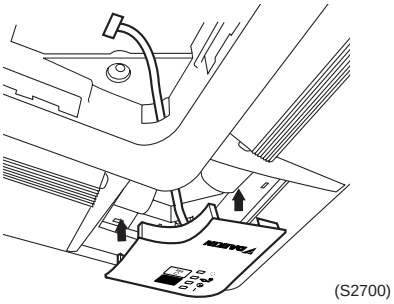

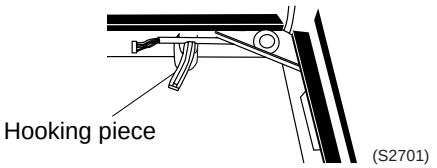

5

Step	Procedure		Points
3	Install the switch box and the decoration panel.		■ When install the decoration panel, be careful not to catch the lead wire.
4	Insert the lead wire of the receiver section to connector X1A, and bind the two wires with tie wrap.	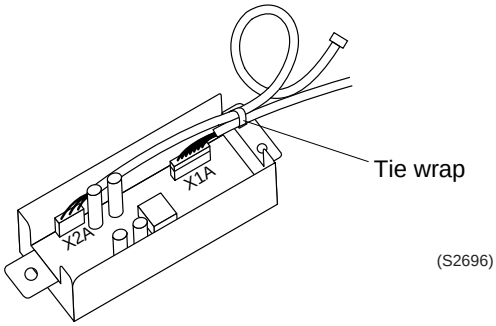 (S2696)	
5	Set the dip switches.		■ Setting the dip switches
6	Mount the transmission parts box with two screws after checking that the tie wrap is in the fixing position and the lead wire is caught with fixing part of tie wrap and can not come out.	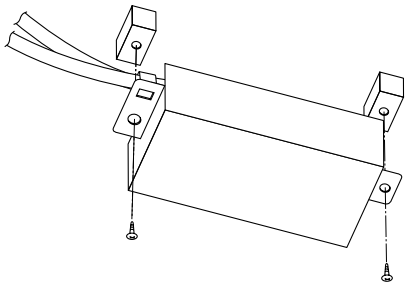 (S2694)	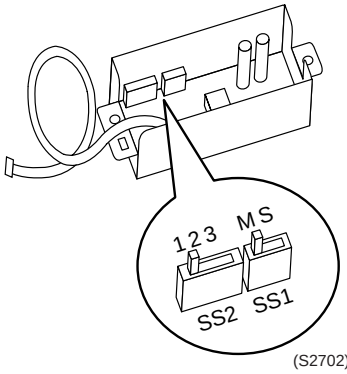 (S2702)
7	Insert the lead wire from the transmission parts box to the connector X24A on indoor unit. Pass through the lead wire to be connected to X24A on the indoor unit PC board under the hooking piece.	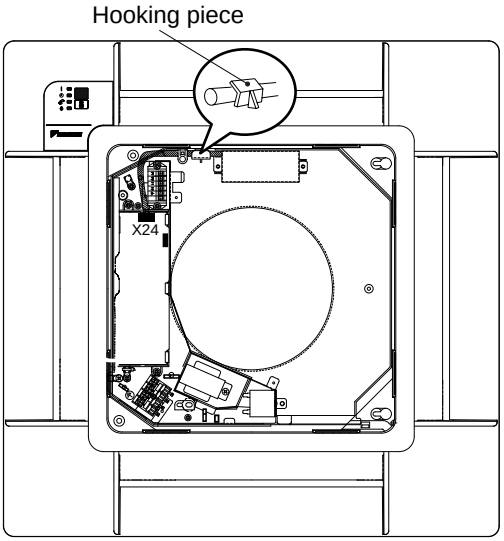 (S2703)	Set the dip switches with same conditions as those of the transmission parts box removed. (For details of setting, refer to the instruction manual of infrared remote control kit.)

5

1.13 FHQ35, 50, 60, 71, 100, 125B

Overview

This part contains the following topics:

Topic	See page
Removal of Air Filter and Suction Grille	5–80
Removal of Electrical Parts and PC Boards	5–82
Removal of Horizontal Blade	5–85
Removal of Fan Rotor and Fan Motor	5–86
Removal of Fan Bearing	5–89
Removal of Bottom Panel and Drain Pan	5–91
Removal of Swing Motor	5–93

5

1.13.1 Removal of Air Filter and Suction Grille

Warning Be sure to wait 10 minutes or more after turning off all power supplies before disassembling work.

Procedure:

Step	Procedure		Points
1	Push the 2 tabs and open the suction grilles.	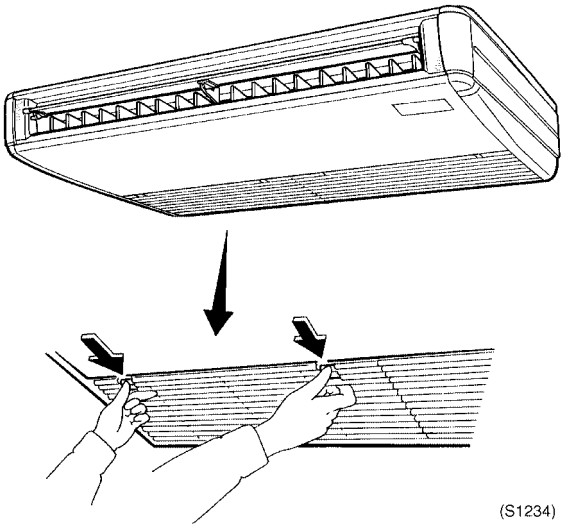 (S1234)	
2	Push the air filter installation panel from 2 places in the direction of the arrow, and pull the air filter out toward yourself.	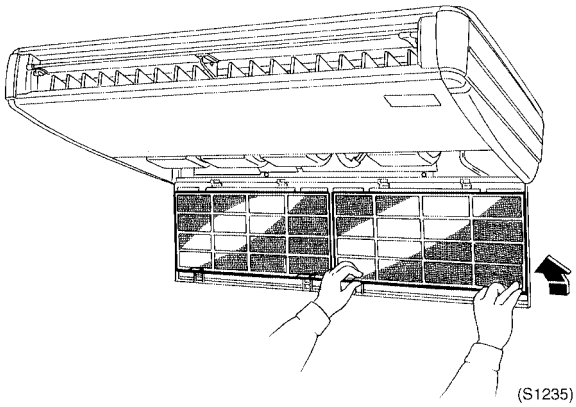 (S1235)	

5

Step	Procedure		Points
3	Grip the suction grille hinge strongly and remove the suction grille.	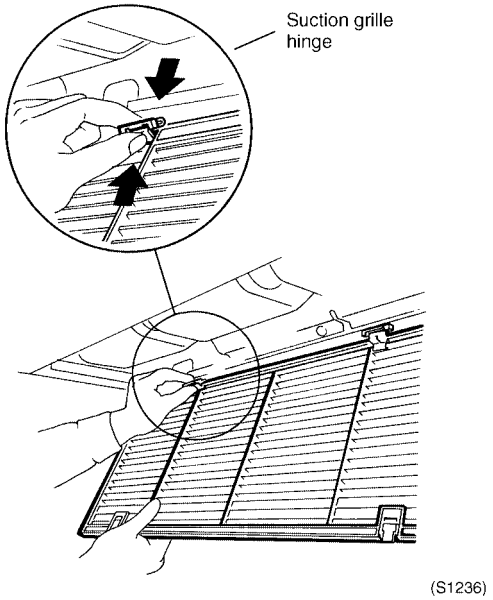	

5

1.13.2 Removal of Electrical Parts and PC Boards

Warning Be sure to wait 10 minutes or more after turning off all power supplies before disassembling work.

Procedure:.

Step	Procedure		Points
1	Loosen the 2 screws of the control box cover and remove the control box cover.	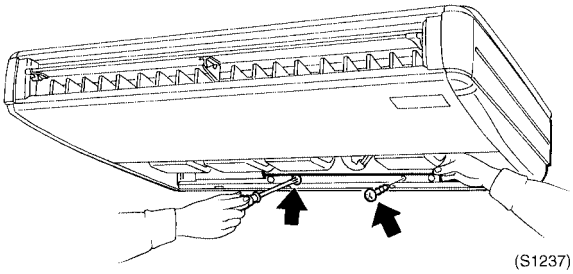 (S1237) 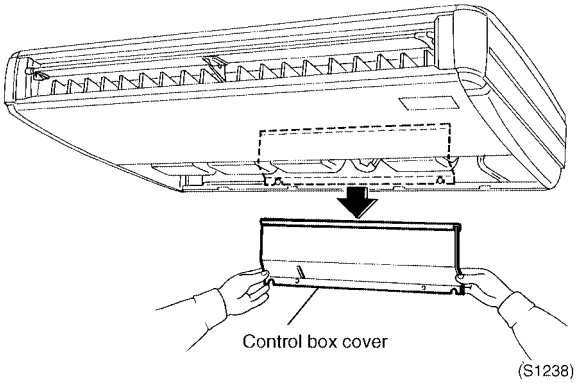 (S1238)	
2	Remove the 2 screws of the control box.	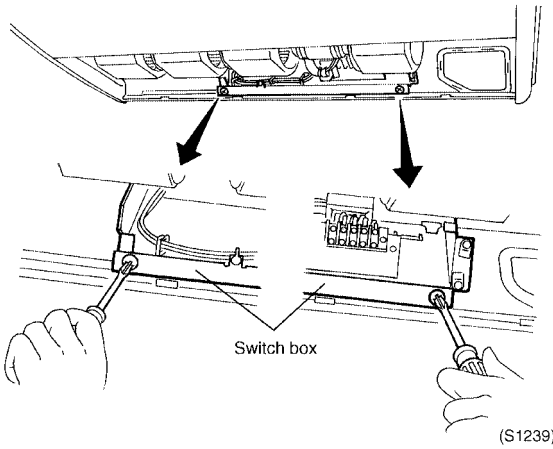 (S1239)	

5

Step	Procedure		Points
3	Pull down the control box and let it hang by the 2 locations in the rear. Electrical parts can now be removed.	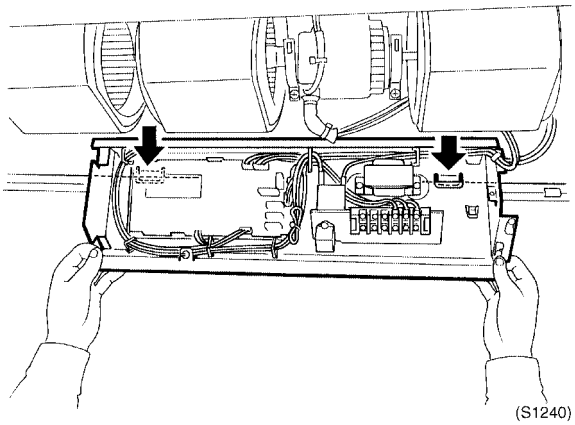 (S1240)	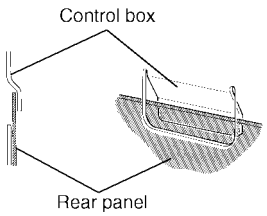 (S1244)
4	Disconnect the connector mounted on the PC board.	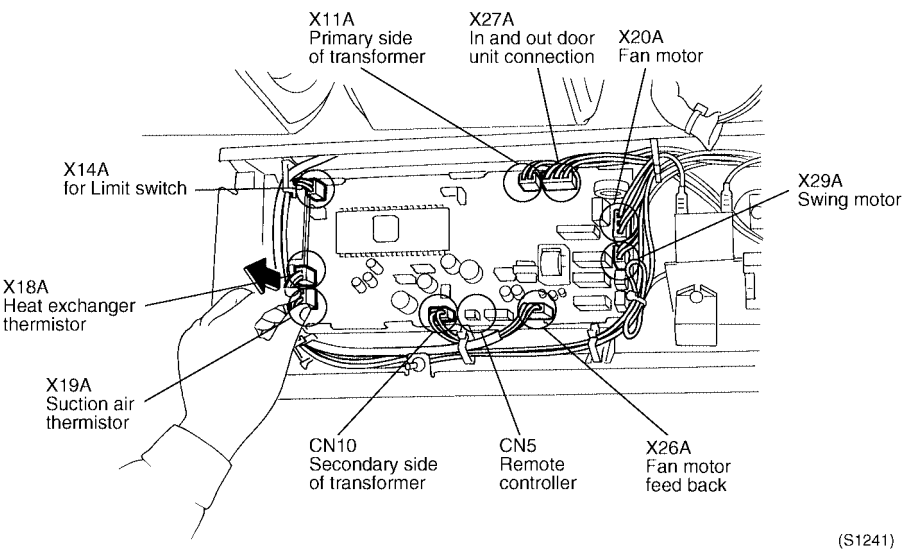 (S1241)	
5	Remove the PC board installation screw.	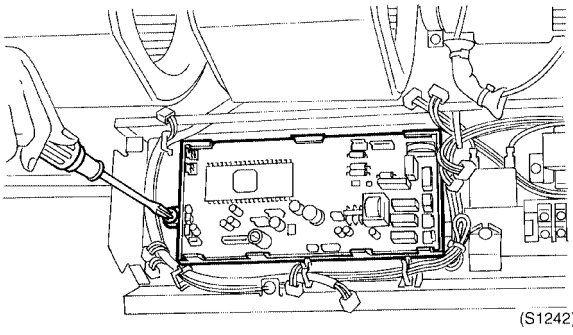 (S1242)	

5

Step	Procedure		Points
6	Slide the PC board to the left away from the tabs on the right, and remove the PC board.	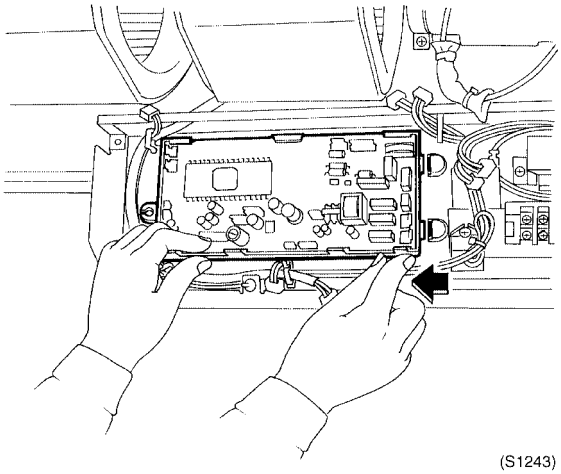	

5

1.13.3 Removal of Horizontal Blade

Warning Be sure to wait 10 minutes or more after turning off all power supplies before disassembling work.

Procedure:

Step	Procedure		Points
1	Gently bend the support plate located at the center of the horizontal blade, and detach the center shaft. (Two shafts provided on Types 140 and 160.)	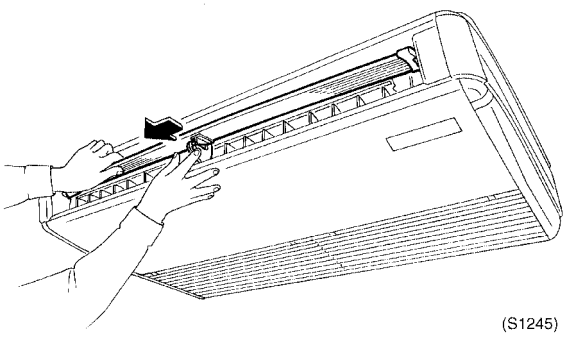 (S1245)	
2	Then gently bend the center of the horizontal blade, and take both the end shafts out of their bearings.	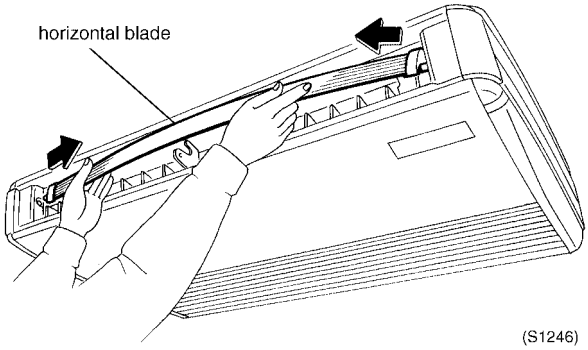 (S1246)	■ When removing the horizontal blade from the bearings at both ends, be careful not to get the blow port thermal insulation scratched.
Reassembling precautions			
1	The shaft at the right end of the horizontal blade is cut in D shape. Fit this D-shaped end to the D-profiled bearing. Reattach the horizontal blade at the right side first.	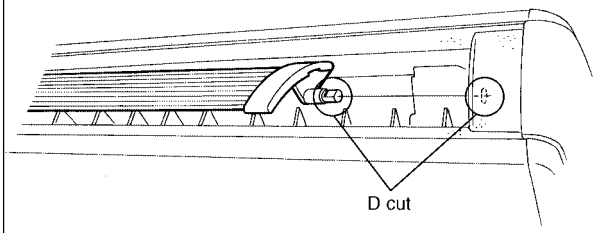 (S1247)	

5

1.13.4 Removal of Fan Rotor and Fan Motor

Warning Be sure to wait 10 minutes or more after turning off all power supplies before disassembling work.

Procedure:

Step	Procedure		Points
1	Push the 2 tabs of the fan housing toward the inside with your fingers, and pull out the fan housing.	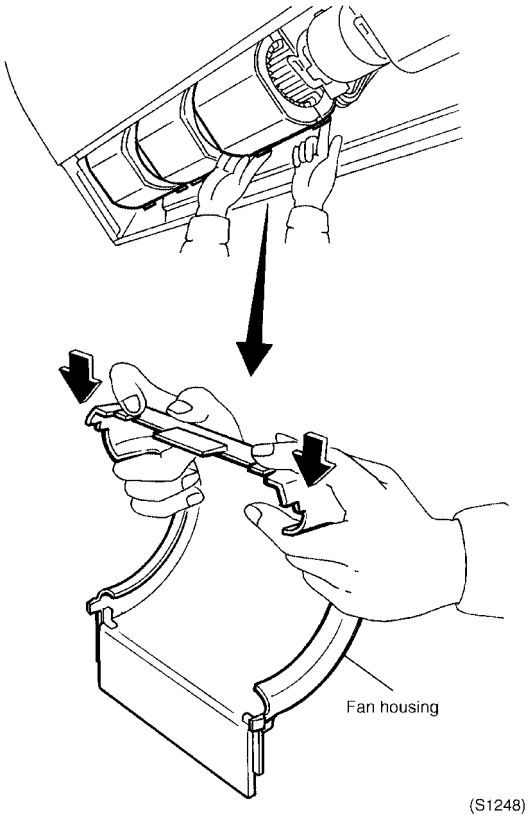	

5

Step	Procedure		Points
2	Loosen the 2 hexagon set screws of the intermediate bearing.	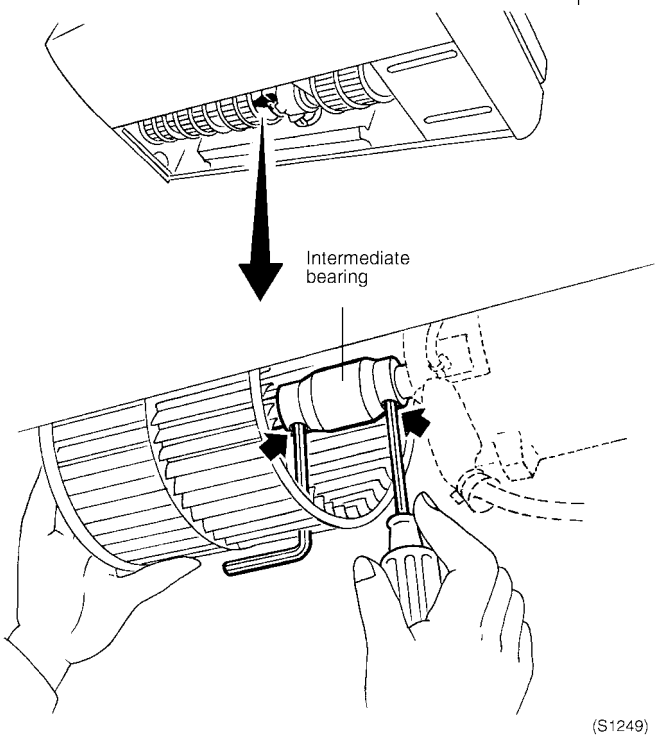	
3	Slide the intermediate bearing to the right and remove the fan rotor ass'y.	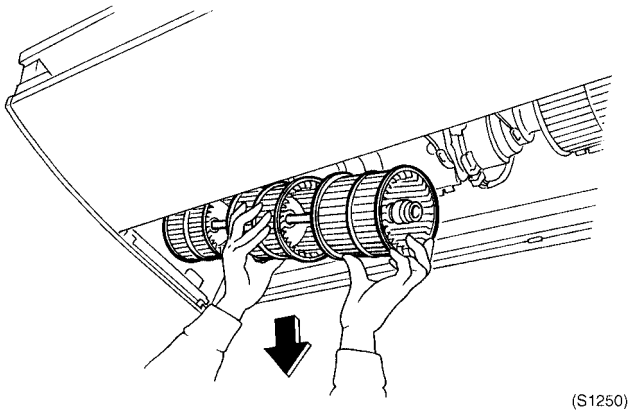	

5

Step	Procedure		Points
4	Cut off the tie-wrap of the glass tube cover over the fan motor connector. Slide the glass tube and get the connector exposed.	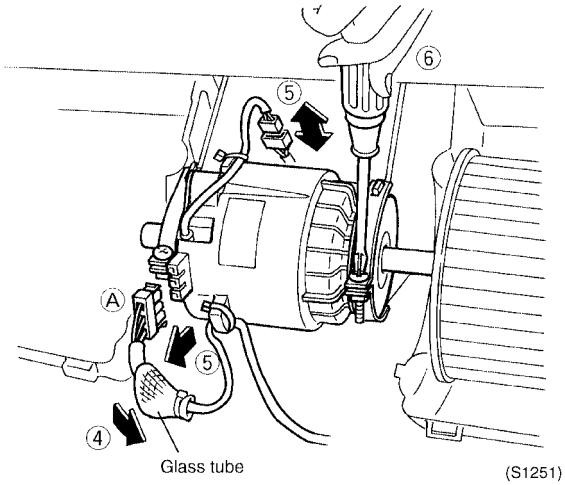	■ Aconnectors Connector (1) handles high voltage (220-240 V), so be sure to turn of the power supply before disconnecting.
5	Disconnect the 2 fan motor connecting connectors.		
6	Remove the 2 fan motor fasteners.		
7	Remove the fan motor.	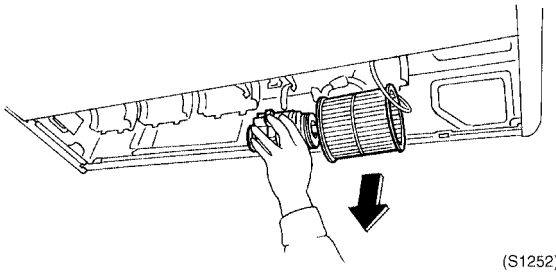	■ Finally reconnect the fan motor connector, cover it with the glass tube and secure it with the tie-wrap.

5

1.13.5 Removal of Fan Bearing

Warning Be sure to wait 10 minutes or more after turning off all power supplies before disassembling work.

Procedure:

Step	Procedure		Points
■	Remove the fan rotor according to the procedures for removing the fan rotor and fan motor.	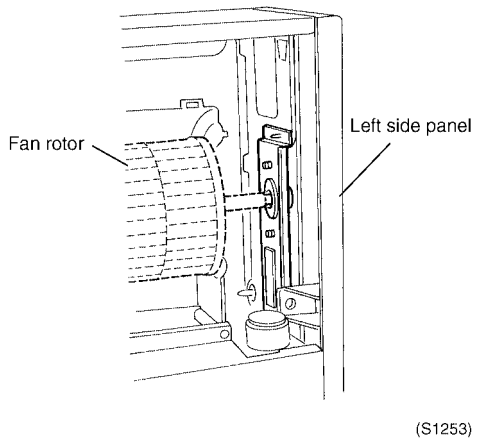	
1	Remove the left side panel installation screw.	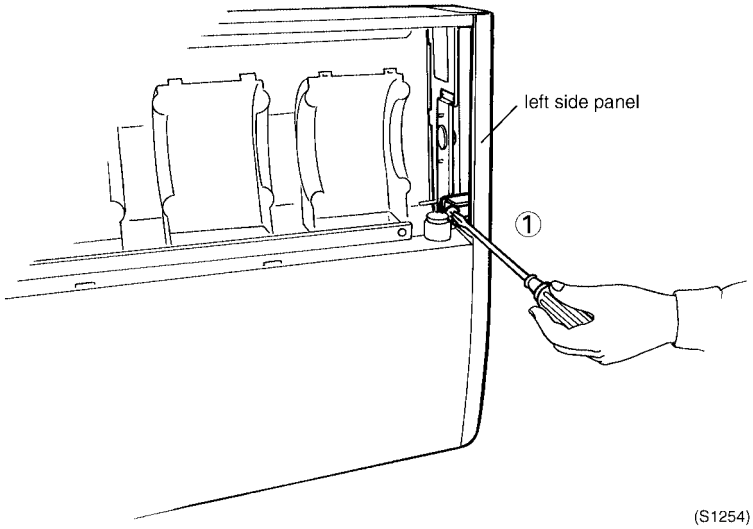	

5

Step	Procedure		Points
2 3	Slide the left side panel toward the front of the unit and remove. Remove the 2 bearing installation screws and remove the bearing.	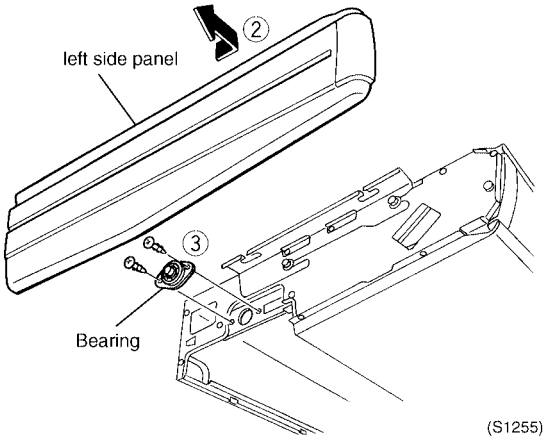	

5

1.13.6 Removal of Bottom Panel and Drain Pan

Warning Be sure to wait 10 minutes or more after turning off all power supplies before disassembling work.

Procedure:

Step	Procedure		Points
1	Remove the 7 bottom panel installation screws (2 each on the left and right, 3 in the rear), and remove the bottom panel.	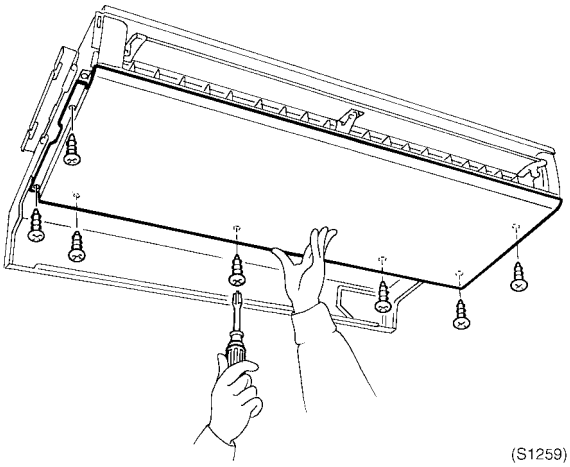 (S1259)	Remove the rear surface screws (2 each on the left and right), and remove the center screw while supporting the bottom panel from underneath.
2	Let down the rear of the bottom panel, push out toward the front (removed from the hooking part) and remove.	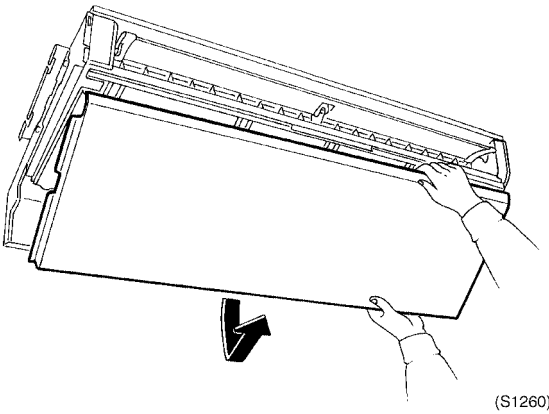 (S1260)	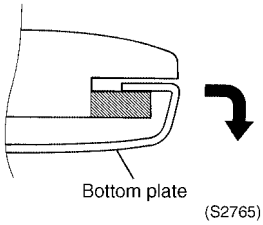 (S2765)

5

3	Remove the drain pan retainer (2 screw).	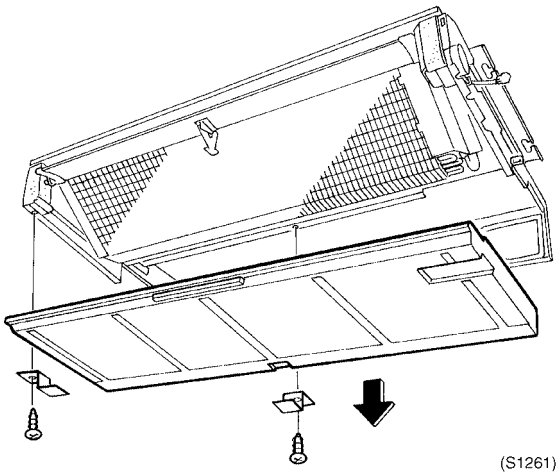	

5

1.13.7 Removal of Swing Motor

Warning Be sure to wait 10 minutes or more after turning off all power supplies before disassembling work.

Procedure:

Step	Procedure		Points
1	Remove the screw from the right side panel. Slide the right side panel toward the front and detach it.	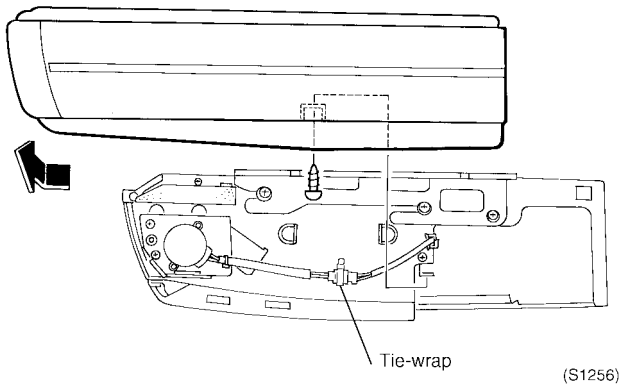	
2	Cut off the tie-wrap of the swing motor connector.		
3	Disconnect the connector from the swing motor connector.	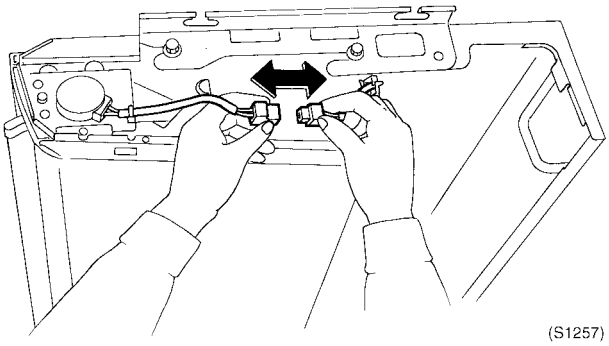	
4	Remove the screw from the swing motor. The swing motor has two projections on it. Lower the swing motor and take it out.	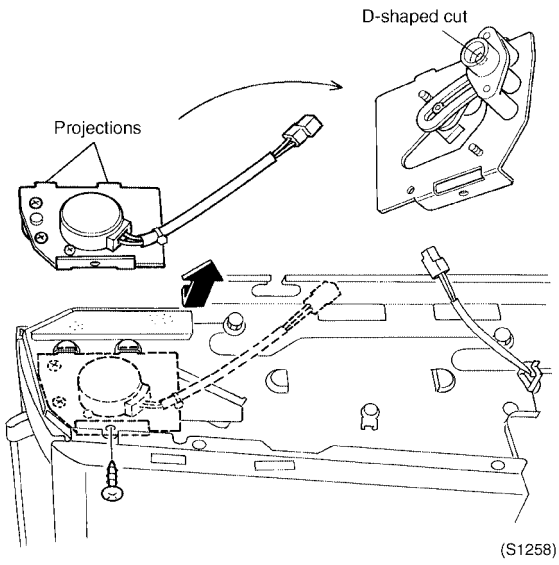	■ When reassembling, fit the horizontal blade shaft end to the D-profiled bearing. Apply the tie-wrap to the connectors to secure them in place.

5

1.14 FUQ71, 100, 125B

Overview

This part contains the following topics:

Topic	See page
Removal of Air Filter	5–95
Removal of Suction Grille	5–96
Removal of Fan	5–98
Removal of Fan Motor	5–100
Removal of Drain Pan	5–102
Removal of Drain Pump	5–105
Removal of Swing Motor	5–107
Removal of Air Flow Control Blade	5–109

5

1.14.1 Removal of Air Filter

Warning Be sure to wait 10 minutes or more after turning off all power supplies before disassembling work.

Procedure:

Step	Procedure		Points
1	Opening suction grille Push two tabs on suction grille toward the center of grille at the same time.	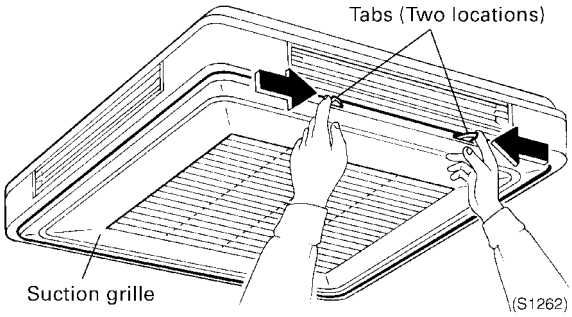	
2	Pull down suction grille. (Two strings are equipped to prevent the grille from dropping.)	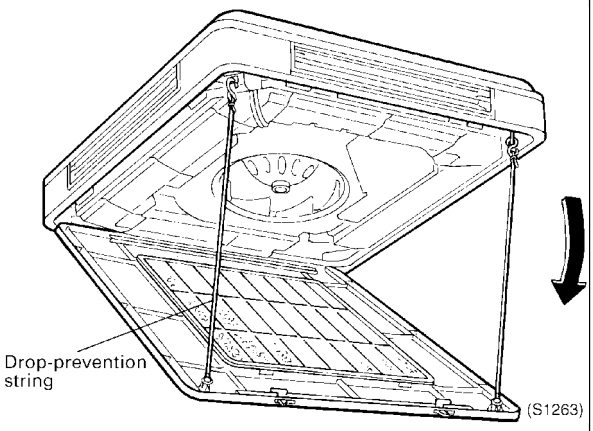	
3	To remove air filter, lift the tabs up at the same time and pull it forward.	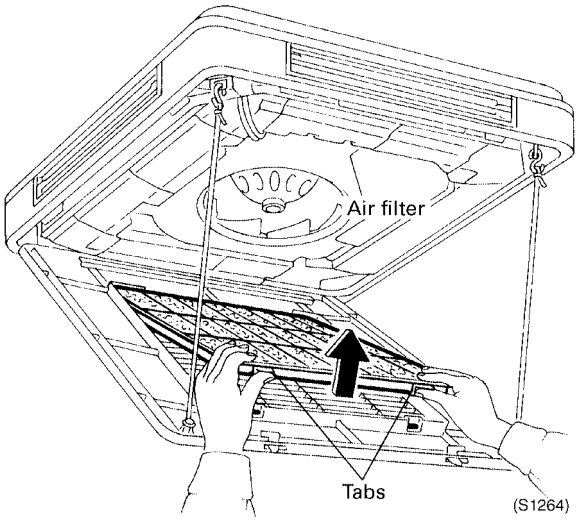	

5

1.14.2 Removal of Suction Grille

Warning Be sure to wait 10 minutes or more after turning off all power supplies before disassembling work.

Procedure:

Step	Procedure		Points
1	Unhook two drop-prevention strings while supporting suction grille with hand.	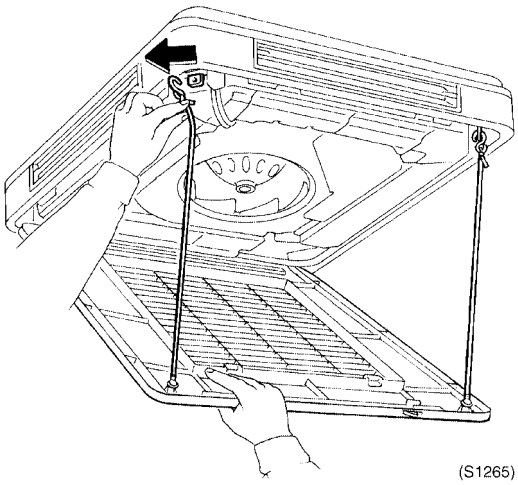	
2	Open suction grille forward for approx. 45 degree.	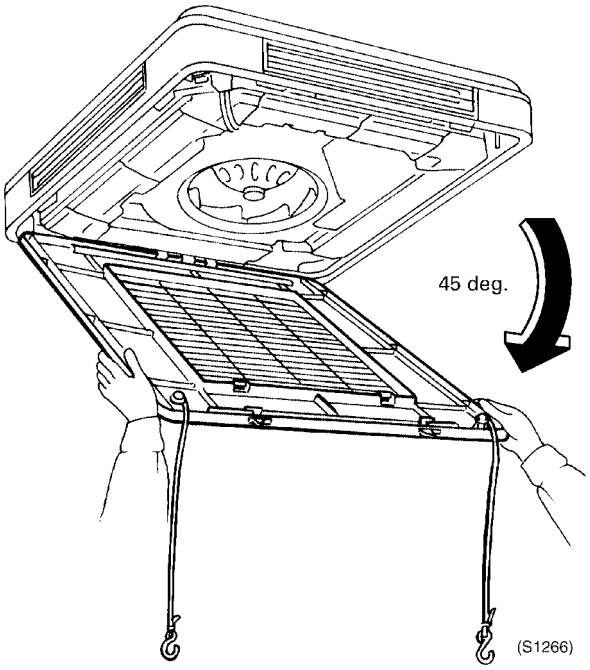	

5

Step	Procedure		Points
3	Disengage three hooks located at rear side of the grille to remove suction grille.	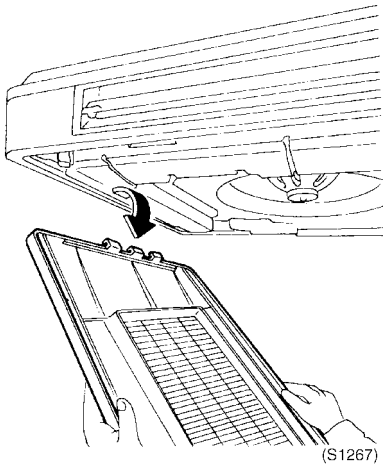 (S1267)	

1.14.3 Removal of Fan

Warning Be sure to wait 10 minutes or more after turning off all power supplies before disassembling work.

Procedure:

Step	Procedure	Points
1	Remove two mounting screws to dismount switch box cover.	
2	Remove suction air temperature thermistor attached to bell mouth.	
3	Bell mouth is mounted with tree screws. Loosen a screw located at diagonal position to the pipings and remove other two screws.	

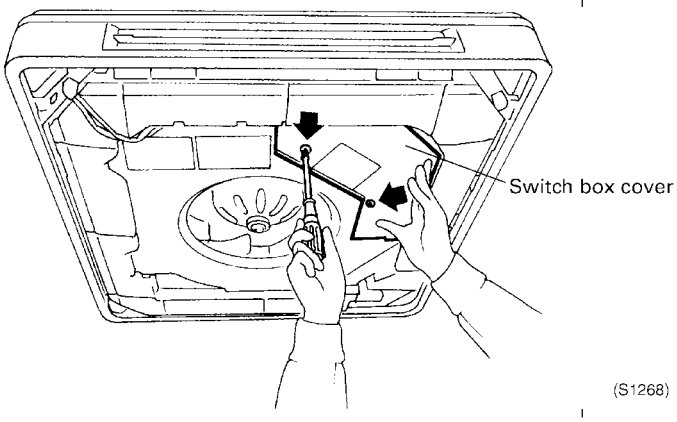

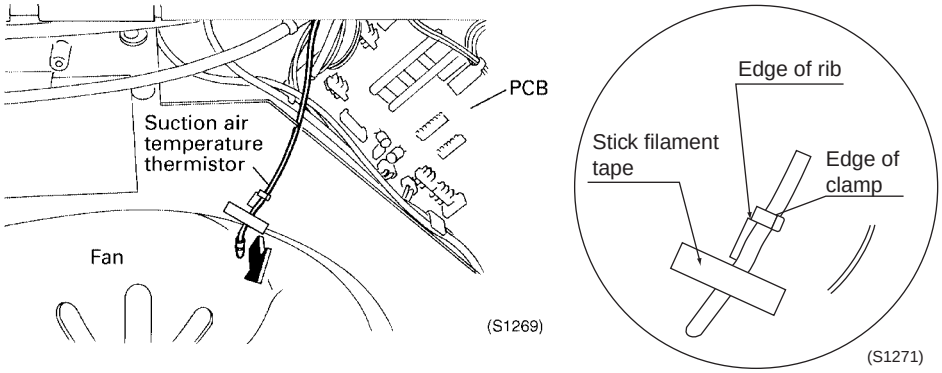

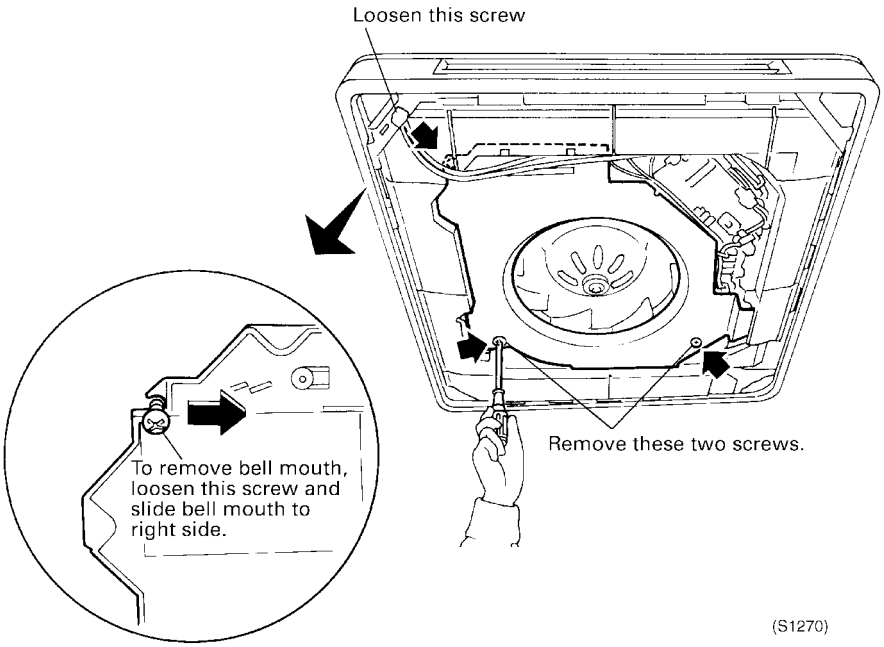

Step	Procedure		Points
4	Remove bell mouth by sliding to piping direction.	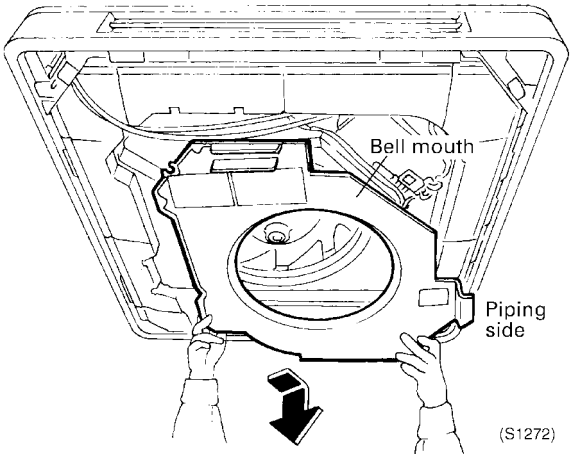	
5	To dismount fan, remove washer based nut using double-ended wrench.	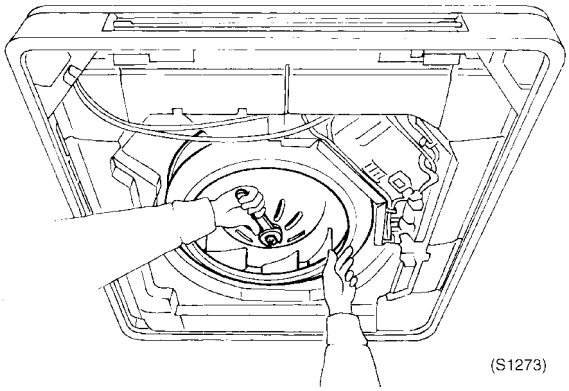	
6	Remove fan by pulling down.	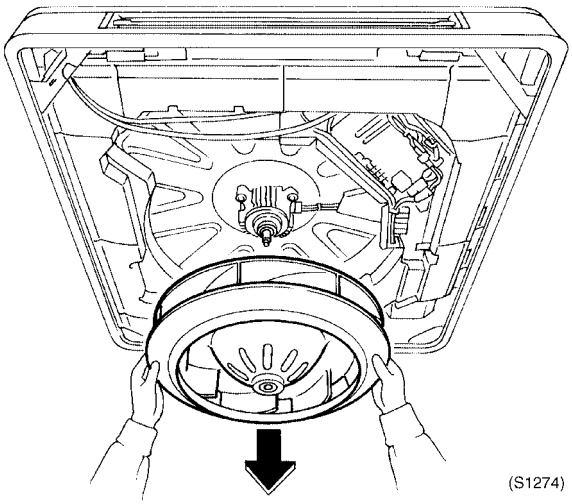	

5

1.14.4 Removal of Fan Motor

Warning Be sure to wait 10 minutes or more after turning off all power supplies before disassembling work.

Procedure:

Step	Procedure		Points
1	Removing fan motor a. Disconnect connector. b. Remove lead wire retaining plate.	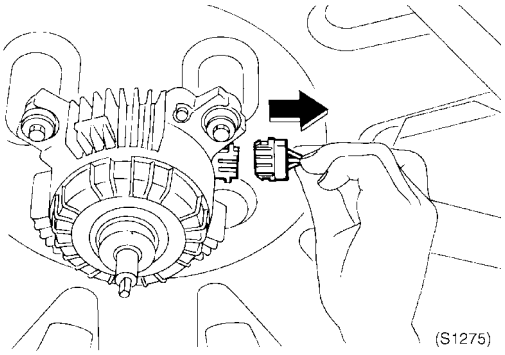 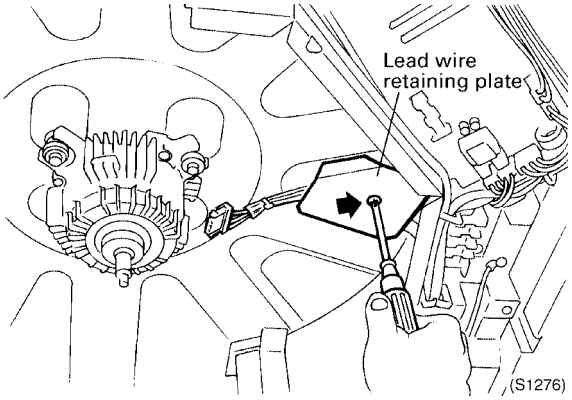	**Caution:** Fan motor can be removed without removing the lead wire retaining plate. However, when washing the heat exchanger, this plate should be removed and protect the lead wires.
2	Remove screws for mounting fan motor. ■ FUQ71BUV1B: Three screws ■ FUQ100/125BUV1B: Four screws	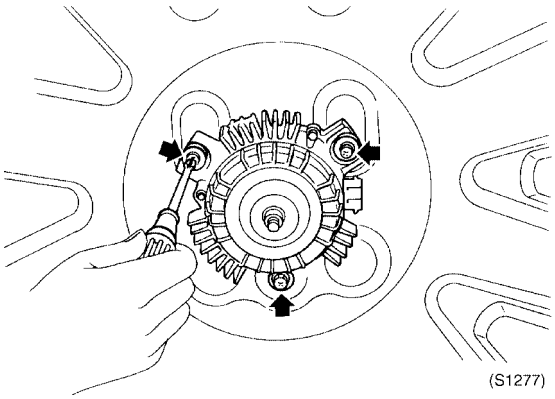	

Step	Procedure		Points
3	Remove motor by pulling down.	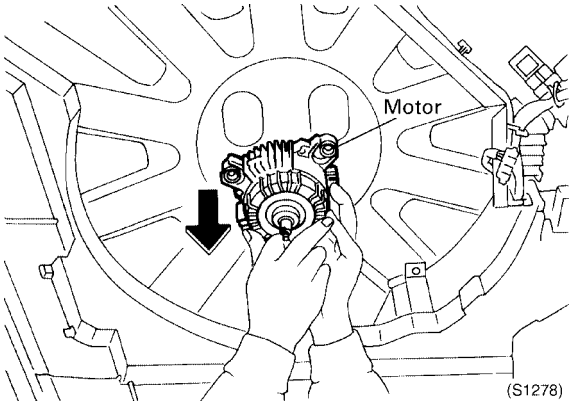	

1.14.5 Removal of Drain Pan

Warning Be sure to wait 10 minutes or more after turning off all power supplies before disassembling work.

Procedure:

Step	Procedure	Points
■	Remove suction grille according to the Removal of air filter and that of suction grille.	
1	To dismount three corner sections A, B and C, remove a flocked screw.	
2	Remove three flocked screws to dismount corner section D.	

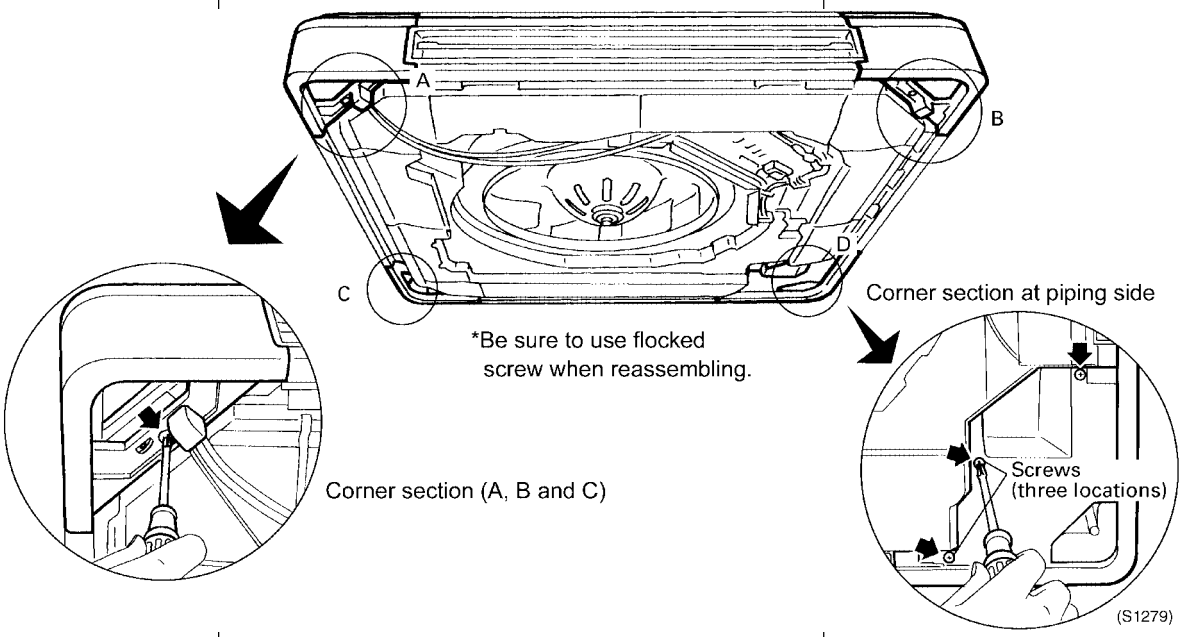

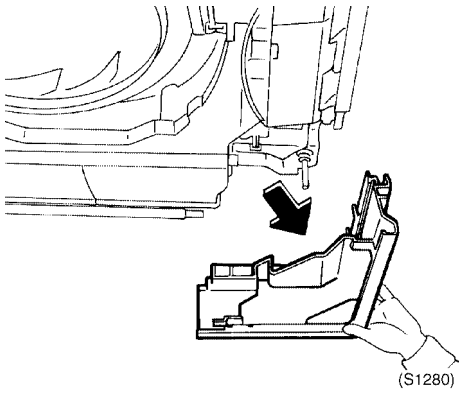

5

Step	Procedure		Points
3	Disconnect wires and connectors from PCB.	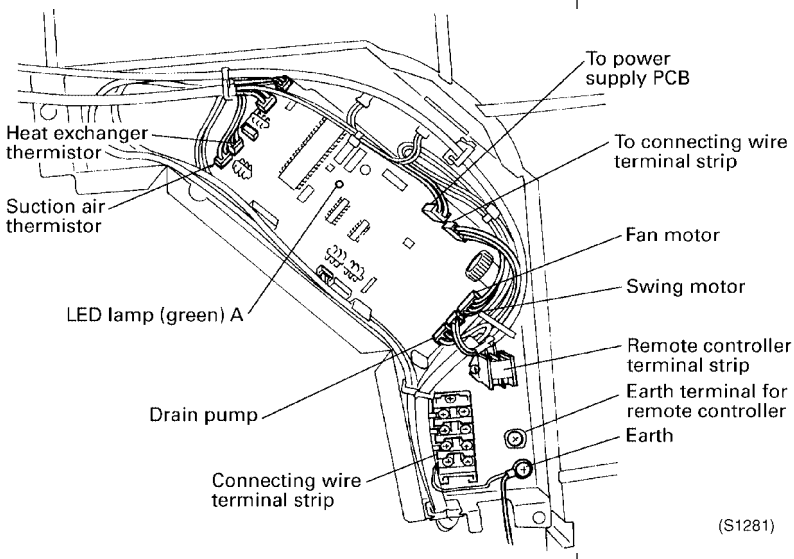	
4	Arrange wire harness to avoid interference with next process.	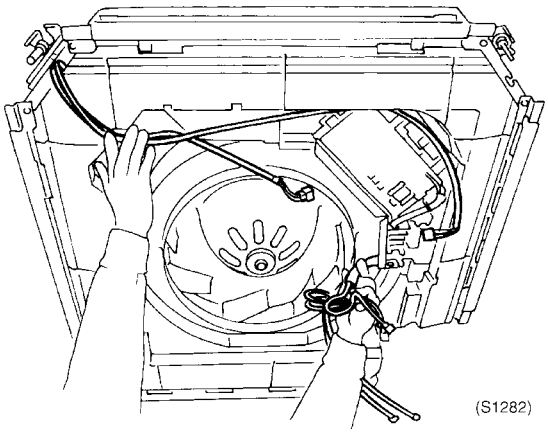	**Caution:** This work should be done by two personnel. If drain water remain in the pan, it may drop and stain on the floor. Make sure to check if no drain water remain in the pan, or cover the floor with vinyl sheet before disassembling work.
5	To dismount drain pan blocking plate, remove each two mounting screws located at four corners.	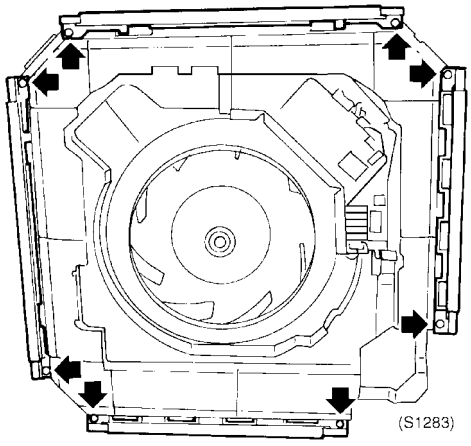	

5

Step	Procedure		Points
6	Remove drain pan by pulling it down.	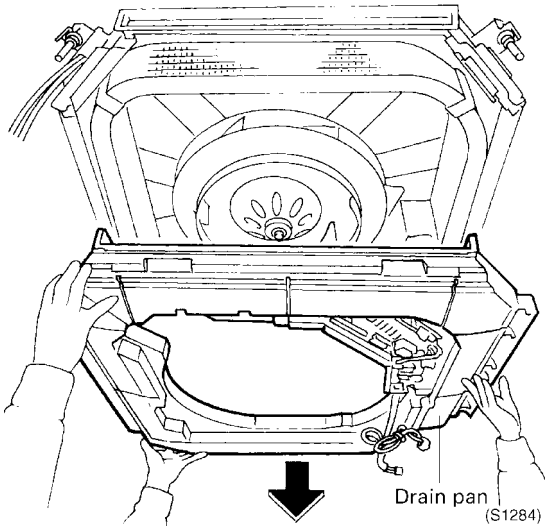	

5

1.14.6 Removal of Drain Pump

Warning Be sure to wait 10 minutes or more after turning off all power supplies before disassembling work.

Procedure:

Step	Procedure		Points
1	Drain pump is located at piping side. Cut clamp material of hose, and disconnect hose from pump.	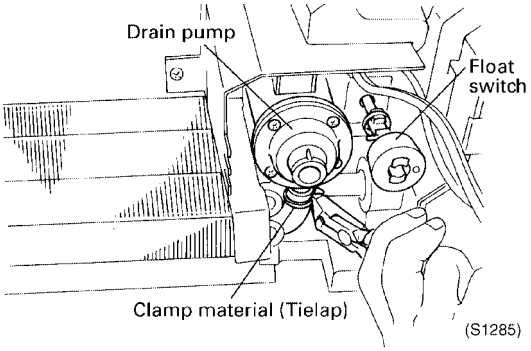	**Caution:** When reconnect drain hose with the pump, secure hose at joint using clamping material such as Tielap. (Clamping material should be normally included in the stock items.)
2	Remove four screws to dismount drain pump.	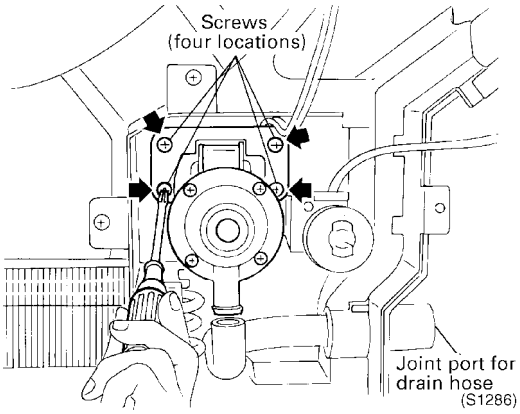	
3	Dismount drain pump by pulling it down.	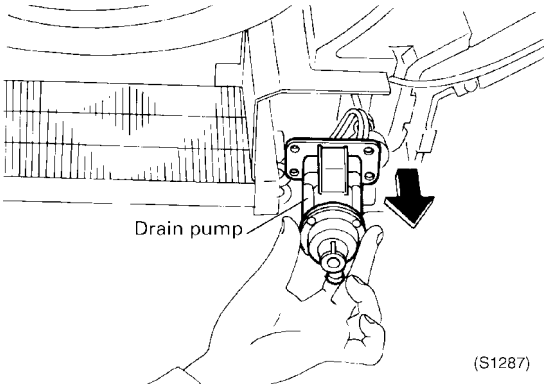	

Step	Procedure		Points
4	Removing float switch a. Loosen three mounting screws to remove drain pump mounting base. b. Remove two screws located at opposite side of drain pump mounting base to dismount float switch.	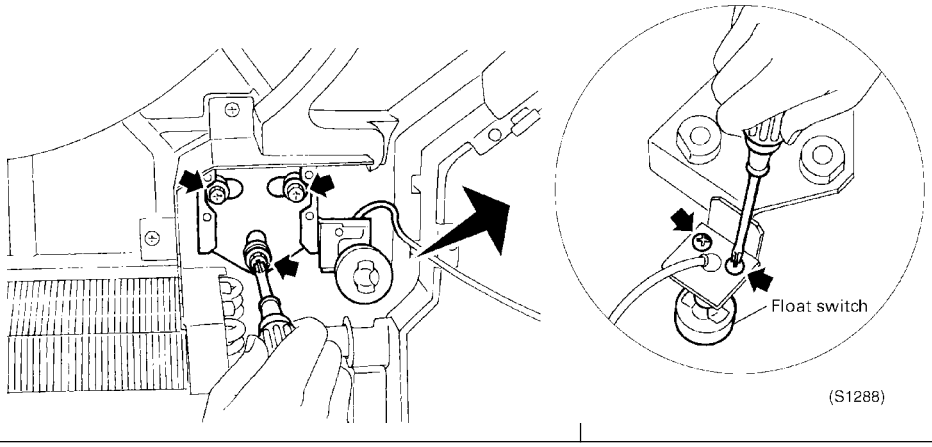	

5

1.14.7 Removal of Swing Motor

Warning Be sure to wait 10 minutes or more after turning off all power supplies before disassembling work.

Procedure:

Step	Procedure	Points
■ Remove suction grille according to "Removal of Suction Grille"	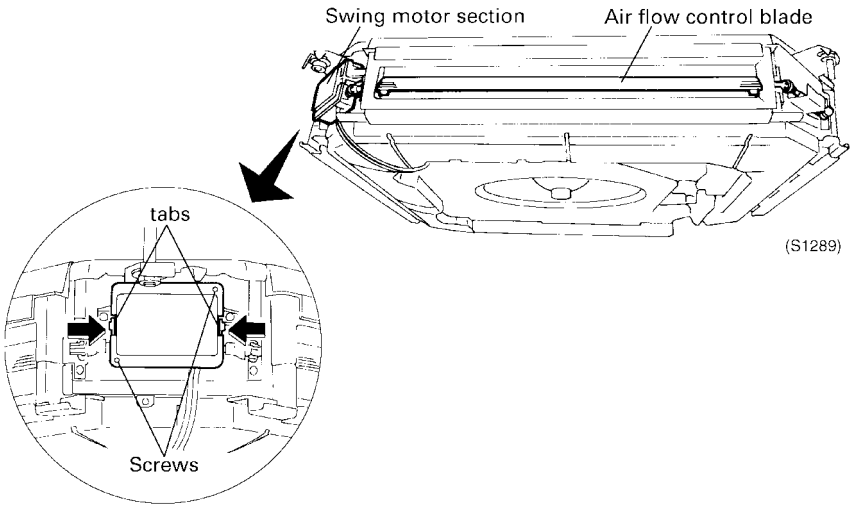	
1 Swing motor is located at the diagonal position of piping. 2 Remove two mounting screws for swing motor cover. 3 Remove swing motor cover by holding two tabs on the cover.	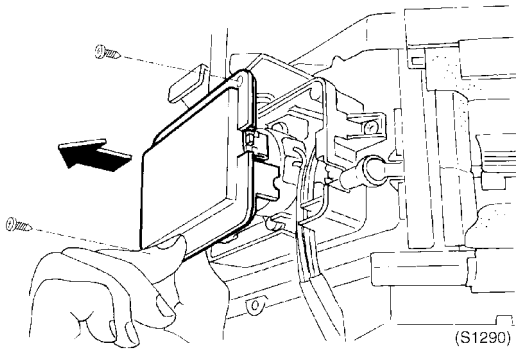	

5

Step	Procedure		Points
4	Remove two screws to dismount swing motor.	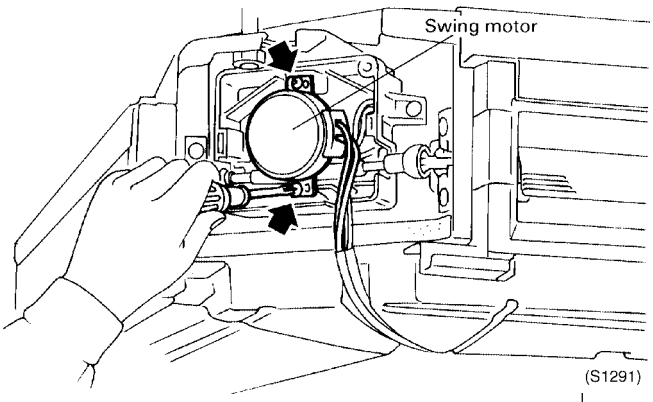 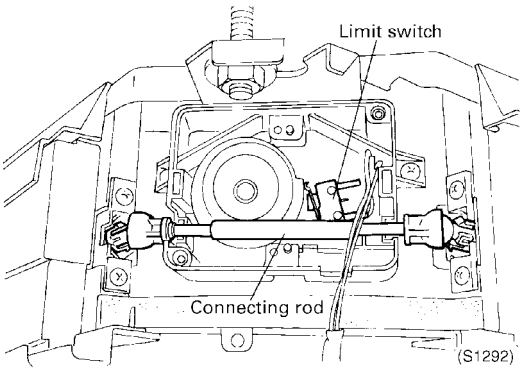	

5

1.14.8 Removal of Air Flow Control Blade

Warning Be sure to wait 10 minutes or more after turning off all power supplies before disassembling work.

Procedure:

Step	Procedure		Points
1	To remove horizontal blade, press down tabs located at both end of blade and pull them forward.	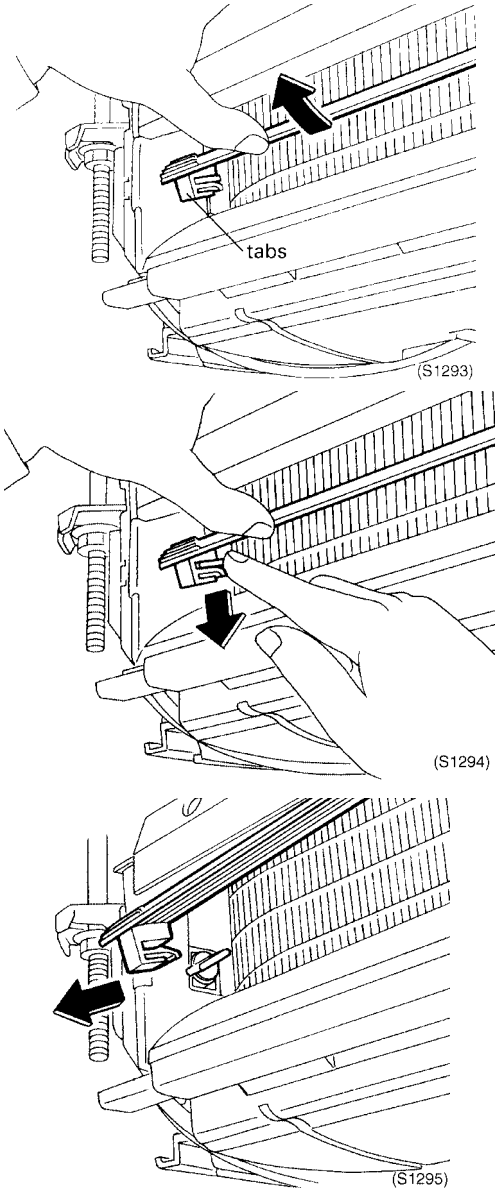	

5

Step	Procedure		Points
2	Remove horizontal blade.	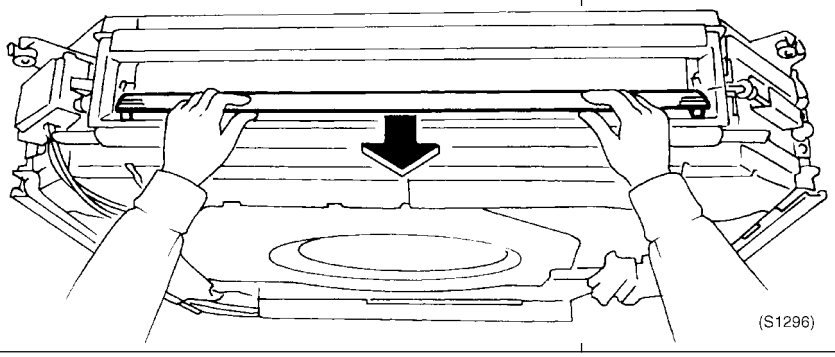	

5

1.15 FAQ71B

Overview

This part contains the following topics:

Topic	See page
Removal of Air Filter and Front Panel	5–112
Removal of Front Grille	5–112
Removal of the horizontal blade and vertical blade	5–115
Removal of Electrical Box	5–117
Removal of Heat Exchanger	5–118
Removal of Fan Motor and Fan Rotor	5–119
Removal of Air Swing Motor	5–120
Drain Hose Piping to the Left	5–121

1.15.1 Removal of Air Filter and Front Panel

Warning Be sure to wait 10 minutes or more after turning off all power supplies before disassembling work.

Procedure:

Step	Procedure	Points
1	Put your fingers on protrusions at left and right side of the unit to open the front panel.	
2	To remove the air filter, push up the tab and pull down the filter.	■ The air filter is free from the side of left or right. ■ It is easy to install if inserting along the guide.

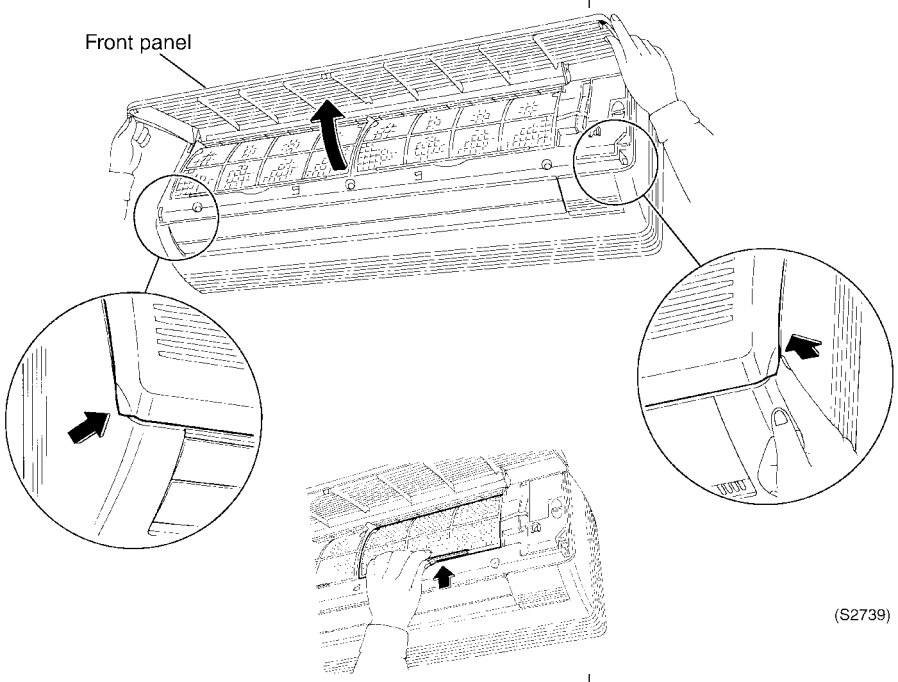

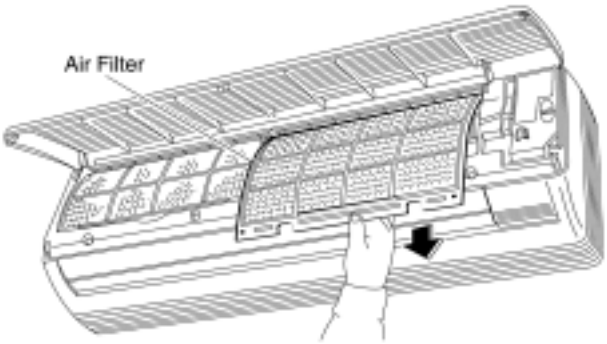

5

Step	Procedure		Points
3	Disengage the holding section on upper right of the panel by pushing toward left, then slide toward right to remove the front panel.	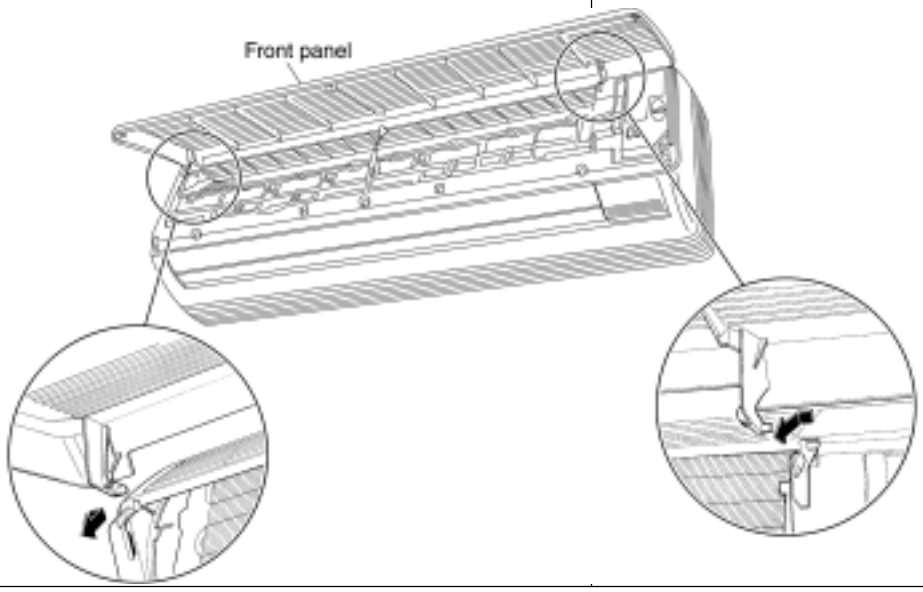	

5

1.15.2 Removal of Front Grille

Warning Be sure to wait 10 minutes or more after turning off all power supplies before disassembling work.

Procedure:

Step	Procedure		Points
■ Removing the front panel in accordance with "Removal of Front Panel".			
1	Remove three pieces of front grille fixing screws.	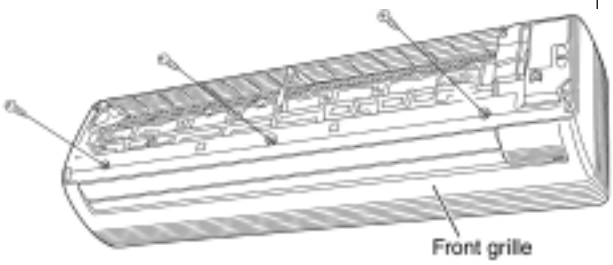	
2	Remove the front grille by pulling forward while pushing three hooks located at upper part of the grille one by one.	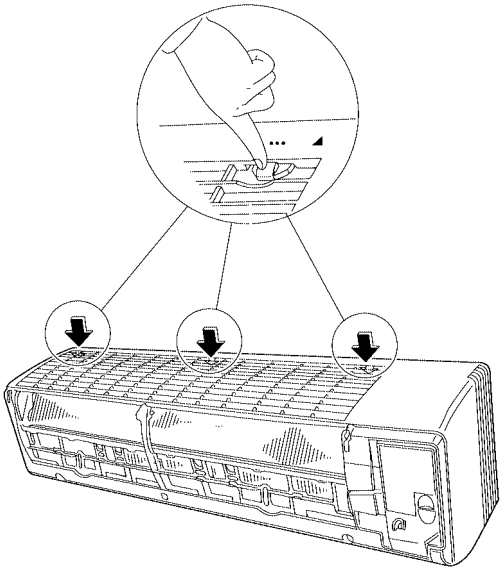	■ If hard to remove, try to push the hooks by a screwdriver or the like to remove.
3	The front grille can be removed by pulling forward and lift the bottom part.		■ Make sure that the three hooks are set on the original position when reinstalling the front grille.

5

1.15.3 Removal of the horizontal blade and vertical blade

Warning Be sure to wait 10 minutes or more after turning off all power supplies before disassembling work.

Procedure:

Step	Procedure	Points
1 Removing the horizontal blade.		
1	Open the horizontal blade.	
2	Bend the horizontal blade slightly to disengage the fixing part at right side.	
3	Pull the horizontal blade rightward and take it out.	

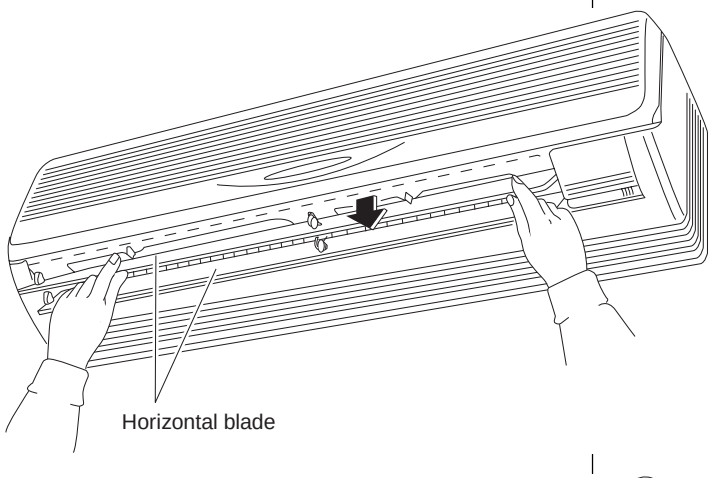

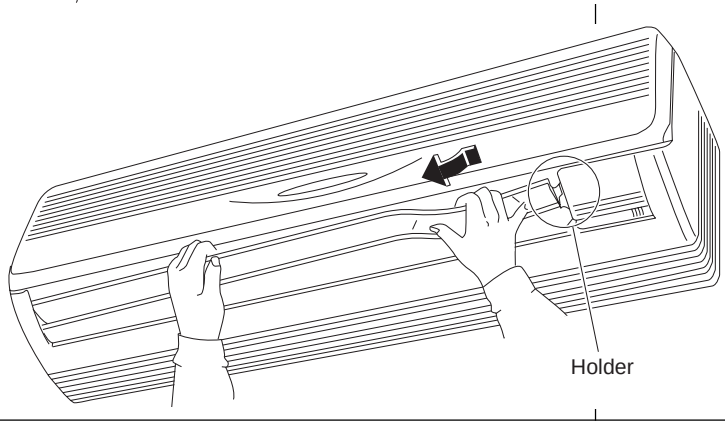

5

Step	Procedure	Points
2 Removing the vertical blade.		
1	Disengage the protrusion on upper side of blade from holder plate. (Three locations)	
2	Push the vertical blade backward and pull the lower side forward to disengage the blade from three hooks.	

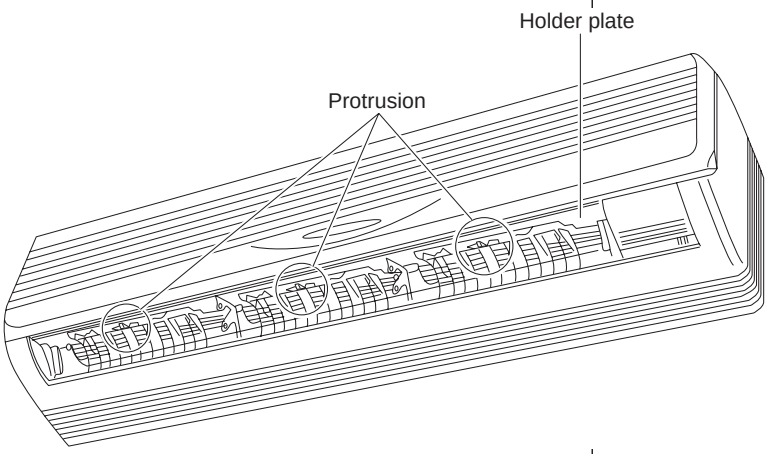

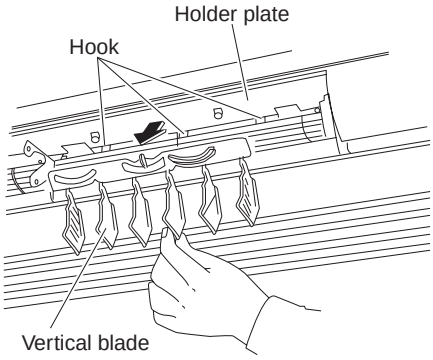

5

1.15.4 Removal of Electrical Box

Warning Be sure to wait 10 minutes or more after turning off all power supplies before disassembling work.

Procedure:

Step	Procedure		Points
■ Removing the front grille in accordance with "Removal of Front Grille".			
1	Remove the screw on the service cover.	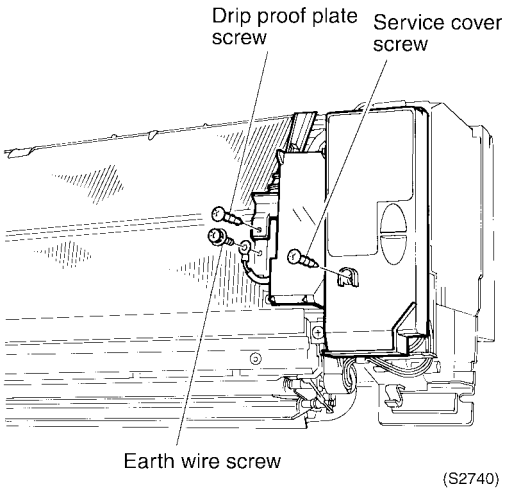	
2	Remove the screw on the drip proof plate.		
3	Remove the screw for the grounding wire.		
4	Remove the following connectors. ■ Fan motor connector ■ Air swing motor connector	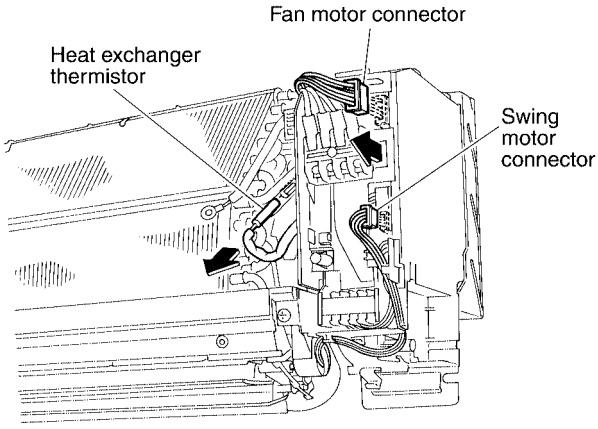	
5	Pull the heat exchanger thermistor and dismantle it.		
6	Remove the fixing screw for switch box.	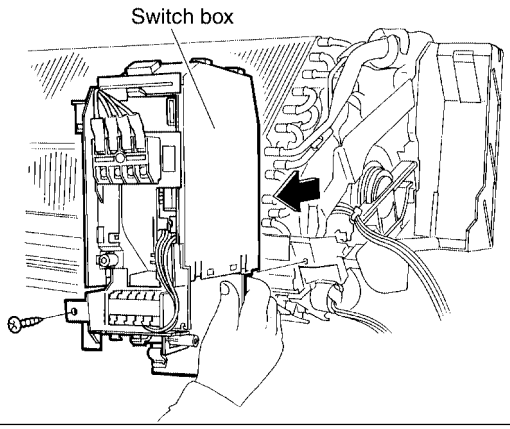	
7	Pull forward the switch box holding lower part of the box.		

5

1.15.5 Removal of Heat Exchanger

Warning Be sure to wait 10 minutes or more after turning off all power supplies before disassembling work.

Procedure:

Step	Procedure	Points
■ Removing the front grille in accordance with "Removal of Front Grille". Removing the switch box in accordance with "Removal of Electrical Box".		**Caution:** If gas leaks, repair the leakage section, collect refrigerant inside the unit completely, then, recharge refrigerant after performing vacuum dehydration.
1	Press strongly the claws on both left and right sides of heat exchanger toward inside.	**Caution:** Don't mix air or the like other than the specified refrigerant into a refrigeration circle. (Mixing of air or other gas causes abnormal high pressure in the refrigerating cycle and results in pipe rupture or personal injuries.)
2	To remove the heat exchanger, pull it upward.	■ Pay attention not to soil the floor with residual drain. ■ In case that the drain hose is buried inside wall, remove the heat exchanger after pulling out the drain hose. **Caution:** When removing or reinstalling the heat exchanger, be sure to wear gloves or wrap the heat exchanger with cloth or the like. (Otherwise, the fins may injure your hand.)

1.15.6 Removal of Fan Motor and Fan Rotor

Warning Be sure to wait 10 minutes or more after turning off all power supplies before disassembling work.

Procedure:

Step	Procedure	Points
■ Removing the front grille in accordance with "Removal of Front Grille". Removing the electrical box in accordance with "Removal of Electrical Box".	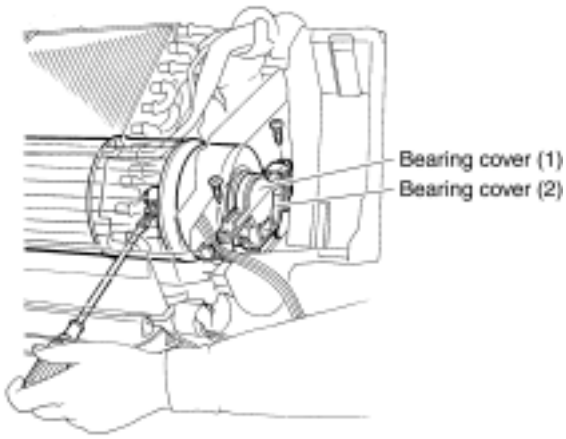	
1 Removing the fan motor		
1 Insert a Phillips tip screwdriver into the air outlet and remove the screws fixing the fan motor and fan rotor. (The screws can be removed without removing of horizontal blade.) 2 Remove the two screws on the bearing cover (1) and (2) and dismantle the covers. 3 Take out the fan motor sideways.	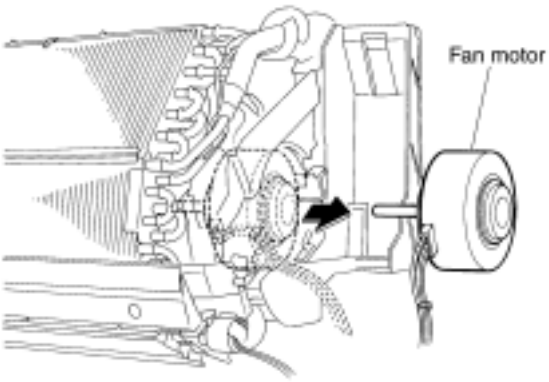	
2 Removing the fan rotor		
■ Removing the heat exchanger in accordance with "Removal of Heat Exchanger".	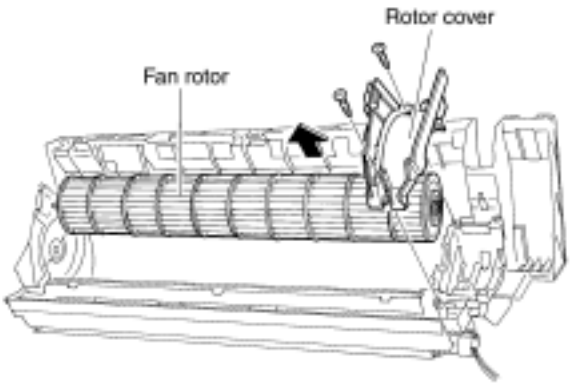	
1 Remove the two screws to dismantle the rotor cover. 2 Pull the fan rotor out.		

5

1.15.7 Removal of Air Swing Motor

Warning Be sure to wait 10 minutes or more after turning off all power supplies before disassembling work.

Procedure:

Step	Procedure		Points
■ Removing the front grille in accordance with "Removal of Front Grille".			
1	Disconnect the air swing motor connector in the electrical box.	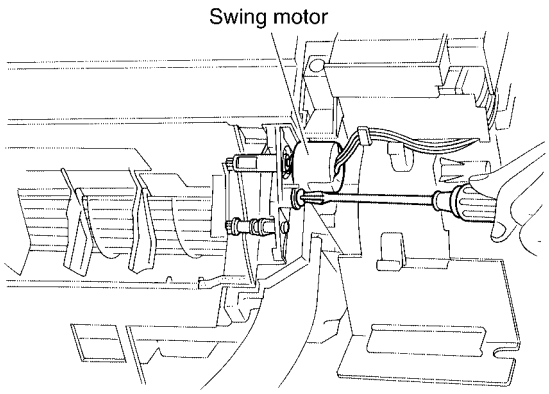	
2	Remove the screw which fixes the air swing motor.		
3	Pull the air swing link assembly to the left strongly to dismantle.	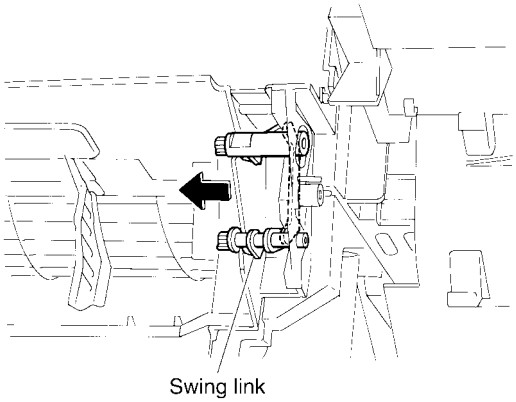	

5

1.15.8 Drain Hose Piping to the Left

Warning Be sure to wait 10 minutes or more after turning off all power supplies before disassembling work.

Procedure:

Step	Procedure	Points
■ Removing the front grille in accordance with "Removal of Front Grille".		■ The drain pan and bottom frame are designed as an integral-type.
1	Pull out the drain hose attached on the rear right of the unit.	
2	Pull out the drain plug and drain socket attached on the rear left of the unit.	
3	Piping of Drain Hose at Left Side.	■ Insert the drain hose to the hose plug securely as far as it will go.
4	Insert the drain plug and drain socket into the right side of the unit with hexagonal pin wrench.	■ Insert the drain plug and socket securely as far as it will go.

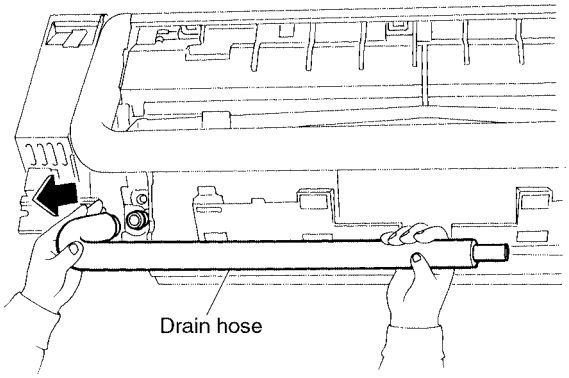

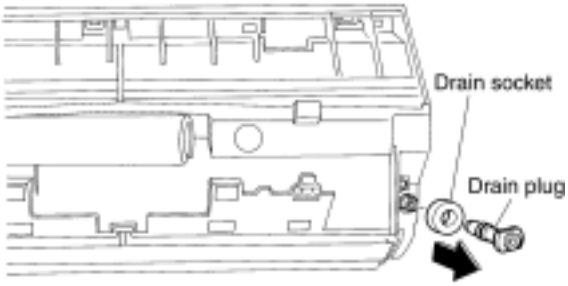

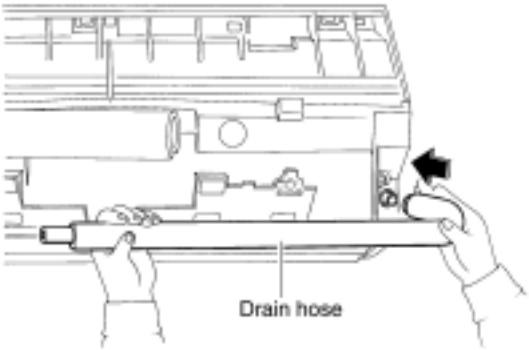

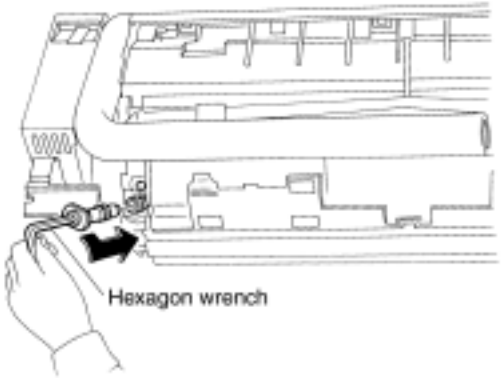

5

1.16 FAQ100B

Overview

This part contains the following topics:

Topic	See page
Removal of Air Filter	5–123
Removal of Slide Panel, Operation Display Cover, and Front Grille	5–124
Removal of Electrical Parts Box	5–125
Removal of PC Board	5–126
Removal of Swing Louvre Unit	5–127
Removal of Fan Motor	5–129
Removal of Drain Pan	5–130
Removal of Heat Exchanger	5–132
Removal of Fan Rotor	5–133

1.16.1 Removal of Air Filter

Warning Be sure to wait 10 minutes or more after turning off all power supplies before disassembling work.

Procedure:

Step	Procedure		Points
		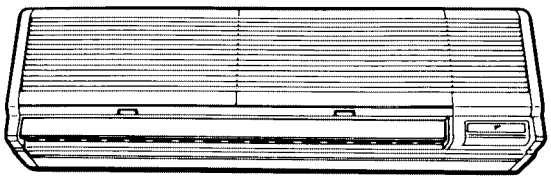 (S1297)	
1	Hold the air filter tabs with your hands and pull out.	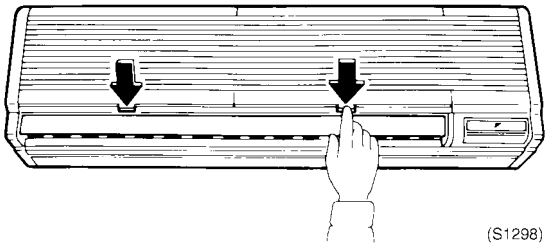 (S1298)	
2	Pull the air filter out.	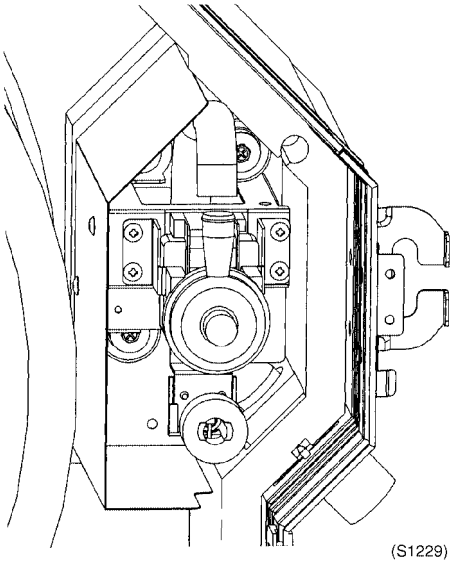 (S1229)	

5

1.16.2 Removal of Slide Panel, Operation Display Cover, and Front Grille

Warning Be sure to wait 10 minutes or more after turning off all power supplies before disassembling work.

Procedure:

Step	Procedure		Points
1	Remove the left and right side panels. (1 white screw each on left and right)	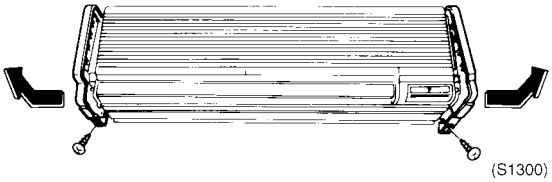 (S1300)	The wiring diagram is applied to the right side panel, and troubleshooting list is applied to the left side panel.
2	Remove the operation display cover installation screw and remove the cover by sliding to the right.	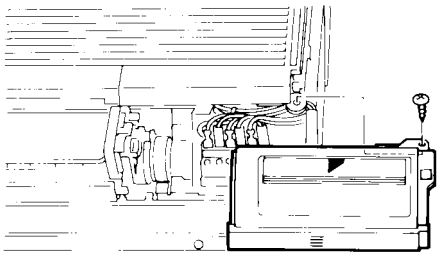 (S1301)	
3	Remove the front grille installation screws (3 M4X l12 screws with spacers)	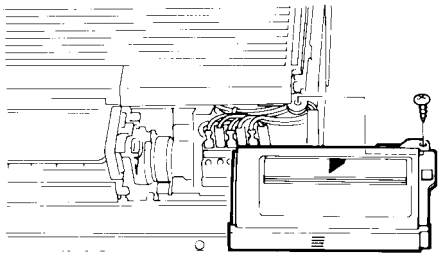 (S1302)	
4	Disconnect the upper hook of the front grille and remove.	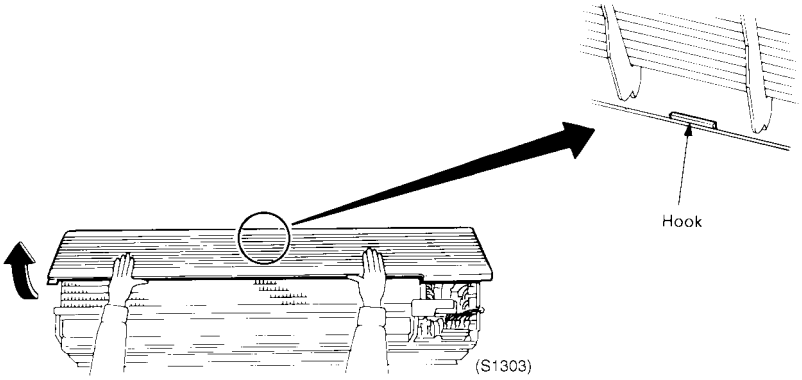 (S1303)	

5

1.16.3 Removal of Electrical Parts Box

Warning Be sure to wait 10 minutes or more after turning off all power supplies before disassembling work.

Procedure:

Step	Procedure	Points
■ Remove the left and right side panels, operation display cover and front grille according to the procedures for their removal.		The left and right side panels have to be taken off in order to remove the front grille.
1	Remove the (1) thermistor, (2) heater connector and (3) rubber clip connected to the PC board.	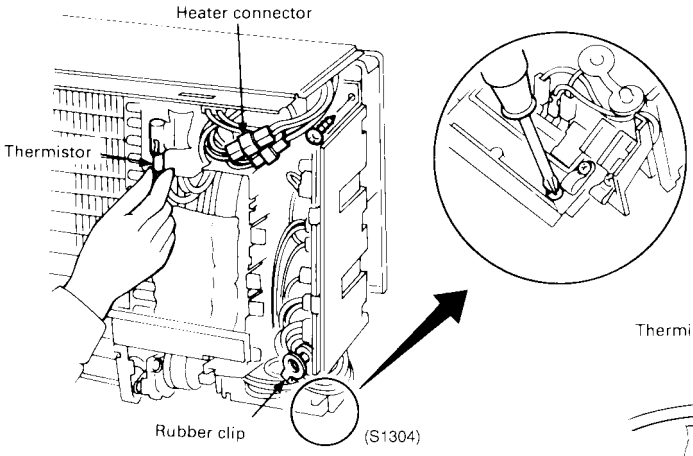
2	Remove the 2 screws fastening the electrical parts box to the units.	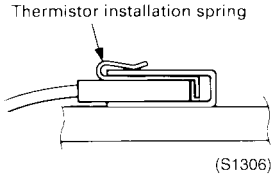
3	Lift the electrical parts box and remove by moving toward the right.	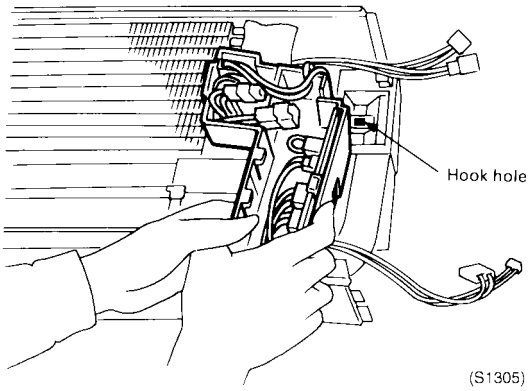 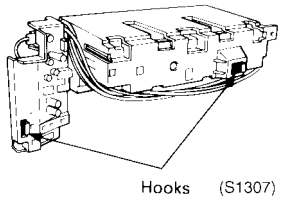 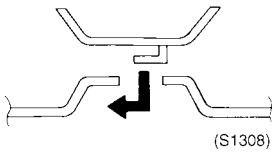

5

1.16.4 Removal of PC Board

Warning Be sure to wait 10 minutes or more after turning off all power supplies before disassembling work.

Procedure:

Step	Procedure		Points
■ Remove the outer panels according to the procedure for "Removal of Electrical Parts Box".			
1	Disconnect the front side wiring connector connected to the PC board.	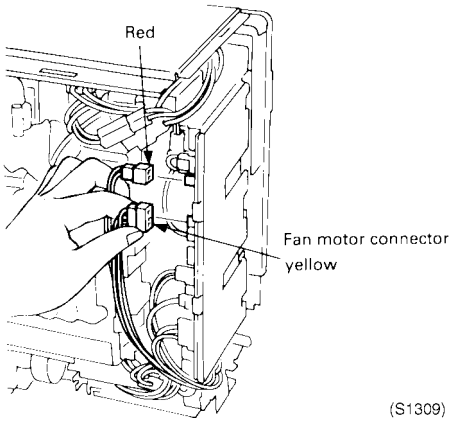	
2	Disconnect the PC board from the tabs by pushing it inward. Draw the PC board out partly and disconnect the remaining connectors.	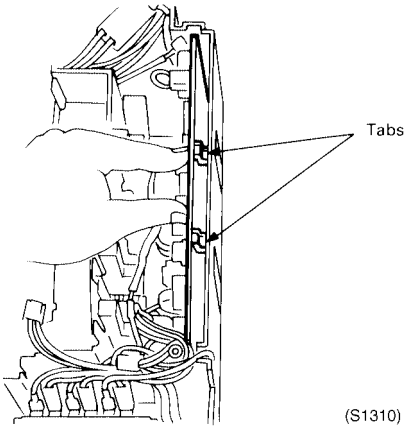	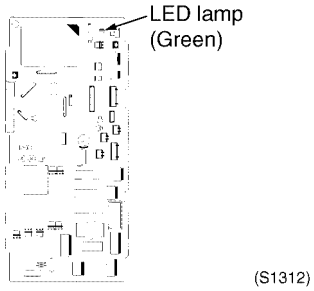 The tape holding the electrical parts box and PC board is for transport, and is unnecessary when reinstalling.
3	Completely remove the PC board.	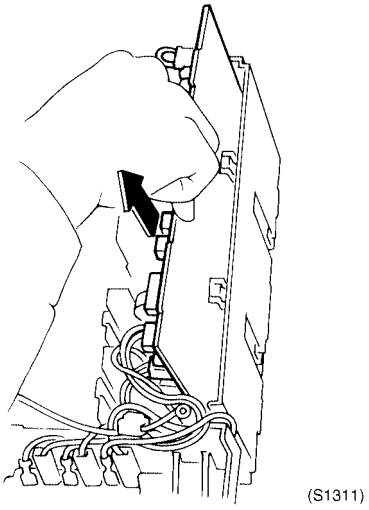	

5

1.16.5 Removal of Swing Louvre Unit

Warning Be sure to wait 10 minutes or more after turning off all power supplies before disassembling work.

Procedure:

Step	Procedure		Points
■ Remove the electrical parts box according to "Removal of Electrical Parts Box".			
1	Remove the horizontal blade.	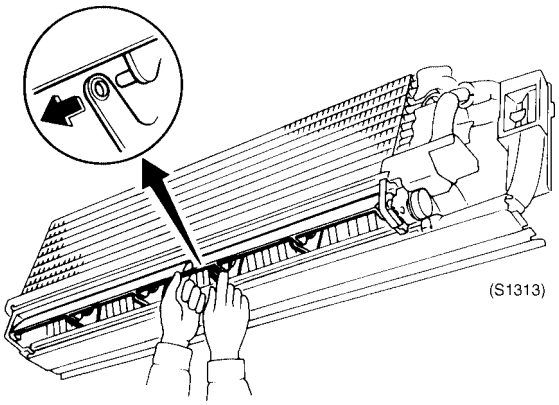 (S1313)	
2	Remove the swing Louvre unit. (3 screws)	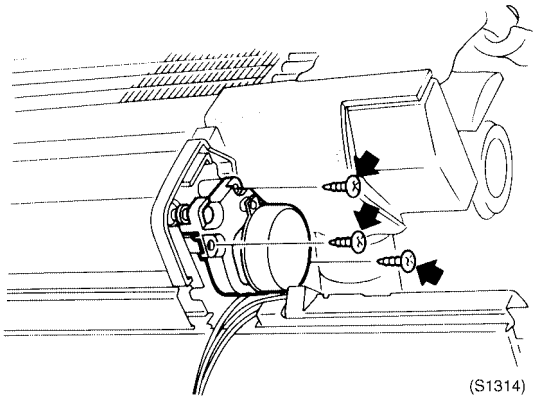 (S1314)	

5

Step	Procedure		Points
3	Remove the swing motor from the swing Louvre unit.	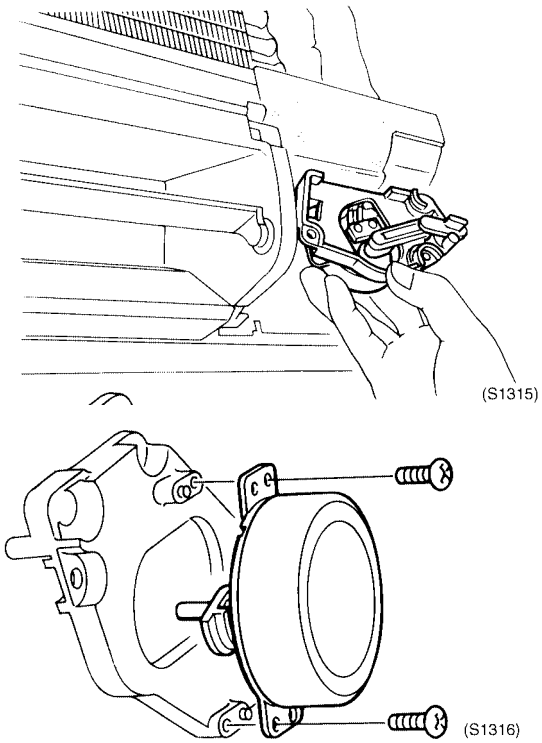	You can replace the swing motor without removing the swing Louvre unit.

5

1.16.6 Removal of Fan Motor

Warning Be sure to wait 10 minutes or more after turning off all power supplies before disassembling work.

Procedure:

Step	Procedure	Points
■ Remove side panels and other external casing, and electrical parts box according to their removal procedures.		Use 2.5 mm hexagon nut driver.
1	Loosen the hexagon set screw fastening the fan rotor and fan motor. 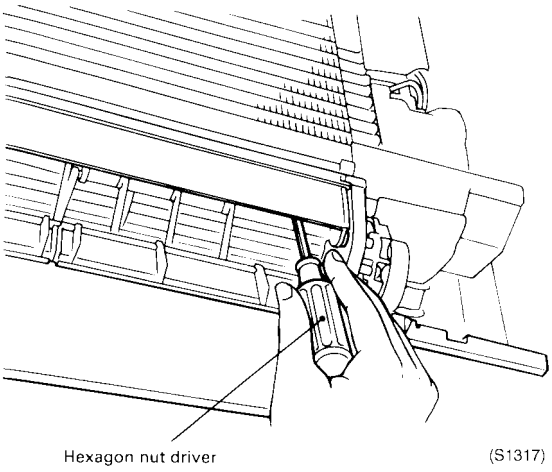	
2	Remove the fan motor fastener. (3 screws) 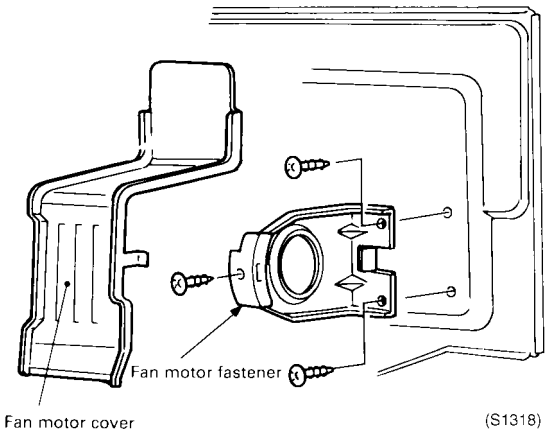	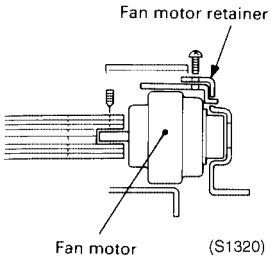
3	Remove the fan motor. 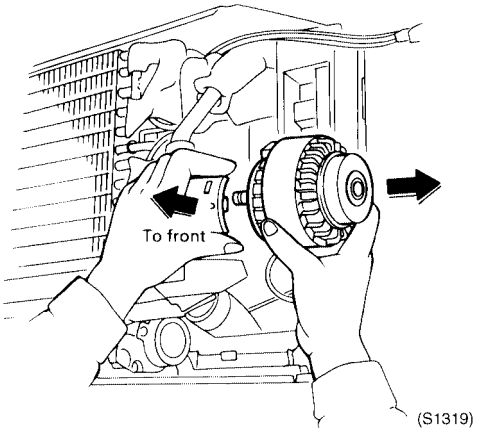	

5

1.16.7 Removal of Drain Pan

Warning Be sure to wait 10 minutes or more after turning off all power supplies before disassembling work.

Procedure:

Step	Procedure	Points
■ If removing the drain pan: Carry out pump down, disconnect the transmission piping and wiring, and remove the main unit.		The bottom panel is fastened to the unit installation plate by 3 screws.
■ Remove side panels, operation display cover and front cover according to their removal procedures.		
1	Remove the bottom panel.	
2	Remove the air discharge section.	

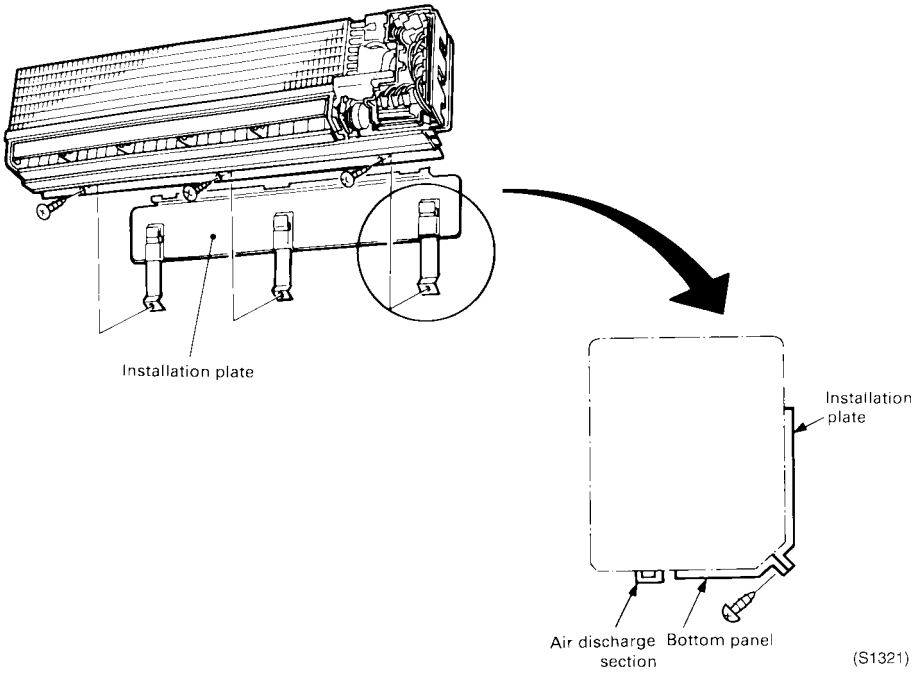

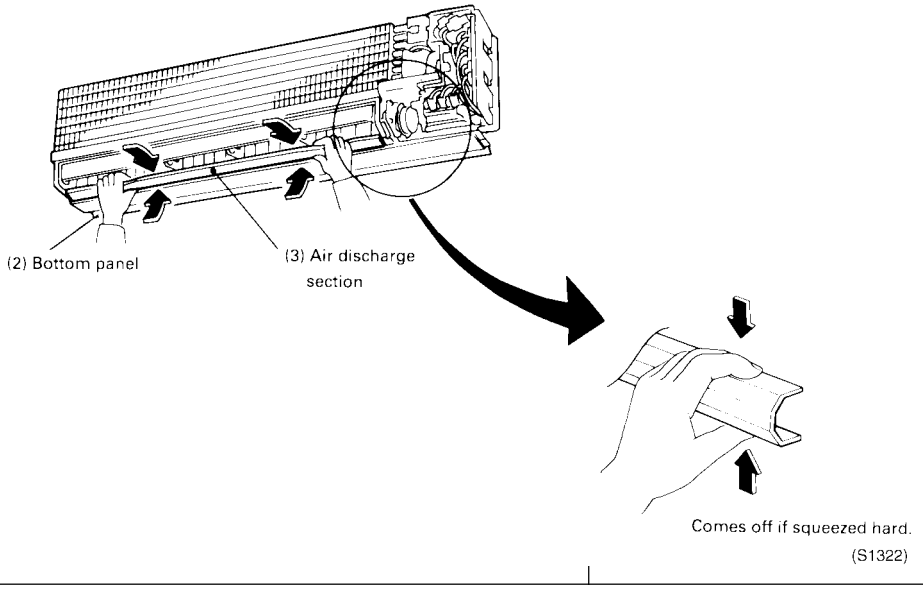

Step	Procedure		Points
3	Remove the air discharge unit. (7 screws)	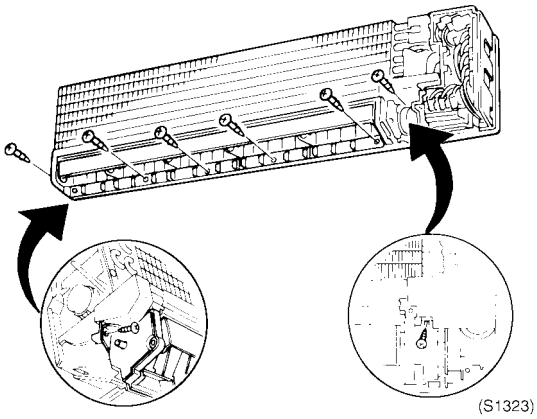	Center of air discharge section also screw fastened.
4	Remove the drain pan.	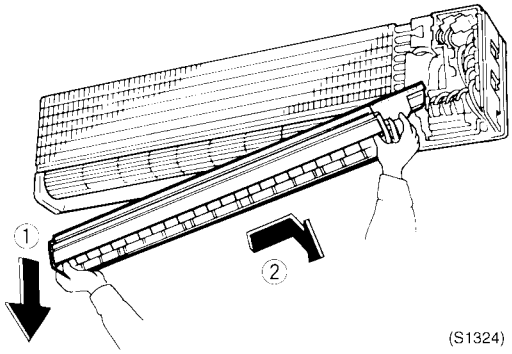	**1** Pull left side toward yourself. **2** Move the drain hose to the right until it comes off.

5

1.16.8 Removal of Heat Exchanger

Warning Be sure to wait 10 minutes or more after turning off all power supplies before disassembling work.

Procedure:

Step	Procedure	Points
■ Before dismounting a heat exchanger, make sure to proceed pump down refrigerant to outdoor unit and disconnect the connection pipe and wiring, then remove the indoor unit.	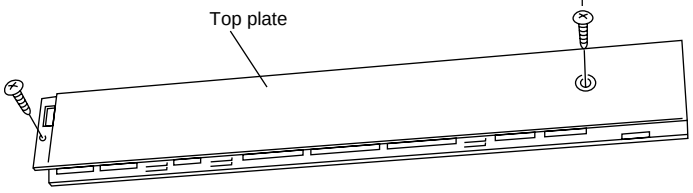	
1	Dismount top plate	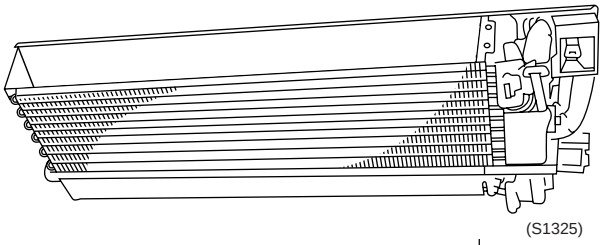 (S1325)
2	Remove the 3 setting screws for heat exchanger and one screw for pipe fixing box.	There is a hock right hand side behind the heat exchanger. 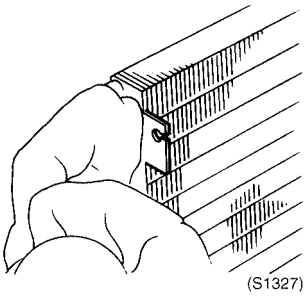 (S1327)
	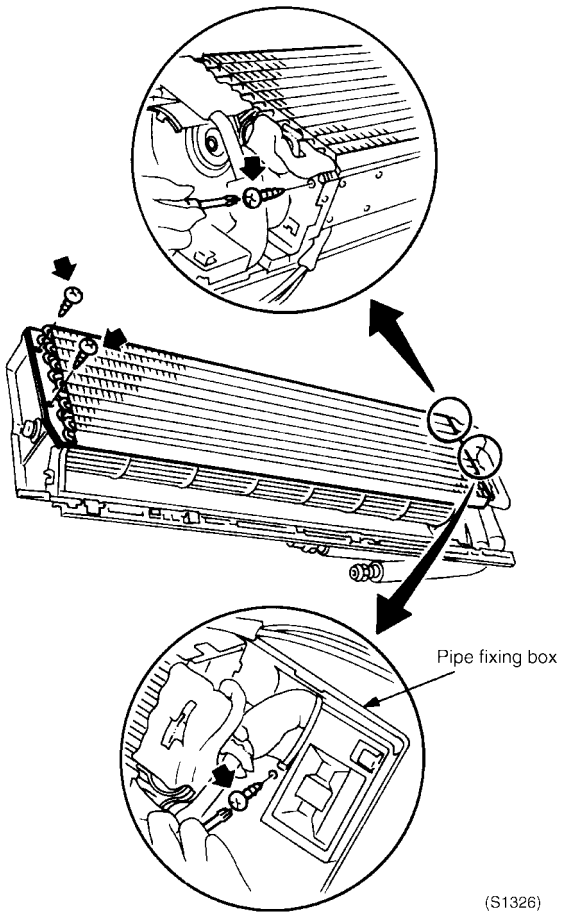 (S1326)	

5

1.16.9 Removal of Fan Rotor

Warning Be sure to wait 10 minutes or more after turning off all power supplies before disassembling work.

Procedure:

Step	Procedure	Points
■ Remove the heat exchanger according to "Removal of Heat Exchanger".		You can also remove the auxiliary electric heater without removing the heat exchanger.
1	Remove the 2 screws of the left side panel.	
2	Remove the fan rotor by sliding to the left and pulling out toward yourself.	
Reference: If you have enough space to pull the fan rotor out from the left side, you can remove it without dismounting the heat exchanger.		

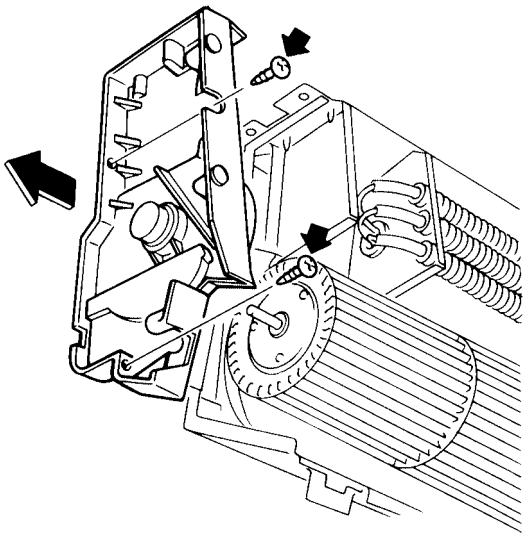
(S1328)

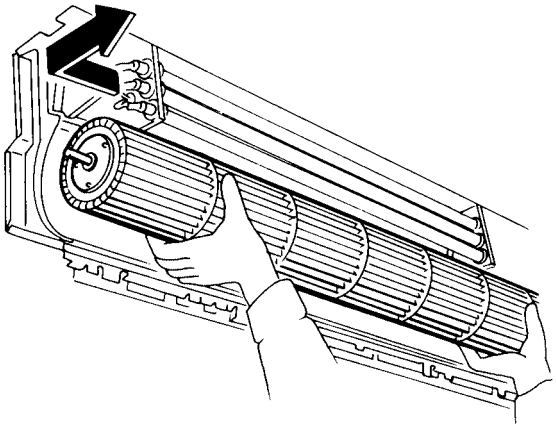
(S1329)

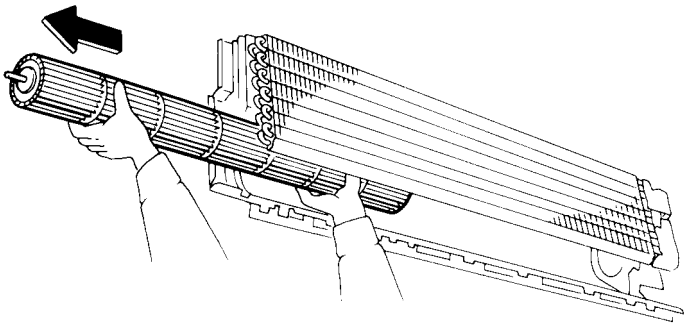
(S1330)

5

5

Index

Symbols

"88" 3–17

A

A1 3–32
A3 3–33
A6 3–36
AF 3–35
Air Filter 5–44, 5–80, 5–95, 5–112, 5–123
AJ 3–38
Automatic restart 2–10

B

Bottom Panel 5–91

C

C4 3–40
C5 3–40
C9 3–40
CC 3–43
Ceiling height 4–15
Centralized Address Setting Error 3–52
Centralized group No. Setting 4–19
Changing
    Field settings, wired remote control 4–11
    Field settings, infrared remote control 4–12
    Maintenance mode settings 4–21
Checking
    Clogged points 3–60
    Fan motor 3–61
    PCB's Hall IC 3–54
    Power supply wave form 3–55
    Test run checks 4–4
    Thermistors 3–56
CJ 3–42
Combination overview . . . . . i–ii
Components
    Exploded views, indoor units 5–3
    Functional diagrams 1–55
    PCB layout 1–107
    Switch box layout 1–95
    Wired remote control 4–10
    infrared remote control 4–12
    Wiring diagrams, indoor units 1–61

Control
Condensation avoidance 2–19, 2–20, 2–21
Draft avoidance control 1. 2–20
Draft avoidance control 2. 2–21
Drain pump 2–17
Indoor unit fan 2–23
PMV. 2–15
Thermostat 2–16
Correlation of Air-Conditioner's Operation Status and Pressure / Running Current 4–26

D

Decoration Panel 5–26, 5–46
Diameters, pipe connections 1–55
Dimensions
Indoor units 1–3
Draft avoidance control 2. 2–21
Drain Pan. 5–58, 5–91, 5–102, 5–130
Drain Pump 5–59, 5–61, 5–105

E

EEPROM 3–32
Electrical specifications 1–45
Emergency operation. 2–5
Error codes
Indoor units 3–31
System malfunctions 3–45
Evaluation
Abnormal high pressure 3–58
Abnormal low pressure 3–59
Exploded views
Indoor units 5–3

F

Factory settings
Indoor units 4–14
Fan and flap operations. 2–22
Fan Bearing 5–89
Fan Motor 5–55, 5–86, 5–100, 5–119, 5–129
Fan Rotor. 5–55, 5–86, 5–119, 5–133
FAQ100B
Removal of Air Filter 5–123
Removal of Drain Pan 5–130
Removal of Electrical Parts Box 5–125
Removal of Swing Louvre Unit 5–127
FAQ100BUV1B
Removal of Fan Motor. 5–129
Removal of Fan Rotor 5–133
Removal of Heat Exchanger 5–132
Removal of PC Board 5–126
Removal of Slide Panel, Operation Display Cover, and Front Grille 5–124
FAQ71B
Drain Hose Piping to the Left. 5–121
Removal of Air Filter and Front Panel 5–112
Removal of Air Swing Motor 5–120
Removal of Fan Motor and Fan Rotor. 5–119
Removal of Heat Exchanger 5–118
Removal of the horizontal blade and vertical blade. 5–115
FAQ71BUV1B
Removal of Electrical Box 5–117
Removal of Front Grille 5–114

FCQ71~140D
Removal of Air Filter 5–24
Removal of Decoration Panel 5–26
Removal of Drain Pan, Drain Pump, Float Switch 5–38
Removal of Fan Motor 5–36
Removal of Heat Exchanger Temperature Thermistor 5–41
Removal of Horizontal Blade. 5–28
Removal of Humidity Sensor and Air Temperature Thermistor 5–35
Removal of PC Board 5–33
Removal of Suction Grille 5–23
Removal of Swing Motor 5–29
Removal of Switch Box 5–31
FFQ35~60B
Installation of drain pump 5–61
Removal of air filter 5–44
Removal of decoration panel 5–46
Removal of drain pan 5–58
Removal of drain pump 5–59
Removal of fan rotor and fan motor 5–55
Removal of horizontal vane. 5–49
Removal of suction grille 5–43
Removal of swing motor 5–51
Removal of switch box 5–53
Replacement of heat exchanger thermistor 5–64
Replacement of heat exchanger 5–66
Replacement of PC board 5–72
Replacement of receiver of infrared remote control 5–76
FHQ35~125B
Removal of air filter and suction grille 5–80
Removal of bottom panel and drain pan 5–91
Removal of electrical parts and pcb boards 5–82
Removal of fan bearing 5–89
Removal of fan rotor and fan motor 5–86
Removal of horizontal blade 5–85
Removal of swing motor 5–93
Field settings
Levels 4–20
Overview indoor units 4–13
Filter counter 4–16
Forced operating mode 2–5
Forced thermostat OFF 2–13
Freeze prevention function 2–14
Functional diagrams 1–55
FUQ71~125B
Removal of Air Filter 5–95
Removal of Drain Pan 5–102
Removal of Fan. 5–98
Removal of Swing Motor 5–107
FUQ71~125BU
Removal of Air Flow Control Blade 5–109
Removal of Drain Pump 5–105
Removal of Fan Motor. 5–100
Removal of Suction Grille 5–96

H

Heat Exchanger. 5–66
Horizontal Blade 5–85
Horizontal Vane. 5–49

I

Identification function. 2–7

L

Locating
- Exploded views, indoor units . . . 5–3
- Functional diagrams . . . 1–55
- PCB layout. . . . 1–107
- Switch box layout. . . . 1–95
- Thermistors . . . 2–4
- Wired remote control components. . . . 4–10
- infrared remote control components . . . 4–12
- Wiring diagrams, indoor units . . . 1–61

M

Malfunction Code and LED Display Table
- Indoor Unit . . . 3–28
- System. . . . 3–29

Malfunction of
- Capacity setting . . . 3–38
- Drain system . . . 3–35
- Drain water level systemt . . . 3–33
- Field setting switch . . . 3–50
- Indoor PCB . . . 3–32
- remote control air thermistor . . . 3–42
- remote control air thermistor . . . 3–43
- Transmission between indoor and outdoor unit. . . . 3–46
- Transmission between indoor unit and remote control . . . 3–48
- Transmission between MAIN and SUB remote control . . . 3–49

Motor lock
- Indoor unit fan . . . 3–36

O

Operation data . . . 4–24

Outlook
- Indoor units . . . 1–3

P

PCBs . . . 1–107

Printed Circuit Board (PCB)
- Indoor Unit PCB (FFQ-B) . . . 5–72
- Indoor Unit PCB (FHQ-B) . . . 5–82

R

Receiver Section . . . 5–76

remote control
- Multiple setting. . . . 4–8
- Setting address for receiver of infrared remote control . . . 4–5
- Setting address for infrared remote control . . . 4–6
- Thermostat, using conditions. . . . 2–11

remote control Display Malfunction Code and Contents . . . 3–26

Removal of Drain Pan, Drain Pump, Float Switch . . . 5–38

Removal of Heat Exchanger Temperature Thermistor . . . 5–41

Removal of PC Board . . . 5–33

Resistance conversion table . . . 3–57

S

Safety devices
Indoor . . . 3–30
Self-Diagnosis by Wired remote control . . . 3–21
Setting
Address for receiver of infrared remote control. . . . 4–5
Address for infrared remote control. . . . 4–6
Ceiling height . . . 4–15
Centralized group No. . . . 4–19
Field settings, wired remote control . . . 4–11
Field settings, infrared remote control. . . . 4–12
Filter counter . . . 4–16
MAIN/SUB when using two remote controls . . . 4–18
Settings
Changing maintenance mode . . . 4–21
Factory overview indoor units . . . 4–14
Feld overview indoor units . . . 4–13
Maintenance mode . . . 4–22
Possible system settings. . . . 4–21
Simulated operation function. . . . 2–8
Specifications . . . 1–45
Standard Conditions . . . 4–25
Suction Grille. . . . 5–23, 5–43, 5–80, 5–96
Swing Motor . . . 5–51, 5–93, 5–107, 5–120
Switch box
Layout . . . 1–95
Removal . . . 5–53

T

Technical specifications . . . 1–45
Test run
Checks . . . 4–4
Thermistor
Indoor Heat Exchanger . . . 5–64
Thermistors
Checking . . . 3–56
Functions. . . . 2–4
Locating. . . . 2–4
Troubleshooting Based on Equipment Condition
Cooling/Heating Operation Starts but Stops Immediately. . . . 3–10
Equipment Discharges Dust.. . . . 3–16
Equipment Discharges White Mist . . . 3–14
Equipment does not Operate . . . 3–6
Equipment Operates but does not Provide Heating.. . . . 3–12
Equipment Produces Loud Noise or Shakes . . . 3–15
Indoor Fan Operates, but Compressor does not. . . . 3–8
remote control LCD Displays "88". . . . 3–17
Swing Flap does not Operate . . . 3–18
Troubleshooting by LED Indication on the Indoor Unit . . . 3–27
Troubleshooting by remote control Display / LED Display . . . 3–28

U

U4 . . . 3–46
U5 . . . 3–48
U8 . . . 3–49
UA . . . 3–50
UC . . . 3–52
UF . . . 3–46

W

Wiring diagrams
Indoor units 1–61

"The present publication is drawn up by way of information only and does not constitute an offer binding upon Daikin Europe N.V.. Daikin Europe N.V. has compiled the content of this publication to the best of its knowledge. No express or implied warranty is given for the completeness, accuracy, reliability or fitness for particular purpose of its content and the products and services presented therein. Specifications are subject to change without prior notice. Daikin Europe N.V. explicitly rejects any liability for any direct or indirect damage, In the broadest sense, arising from or related to the use and/or interpretation of this publication. All content is copyrighted by Daikin Europe N.V.."

Daikin Europe N.V. is approved by LRQA for its Quality Management System in accordance with the ISO9001 standard. ISO9001 pertains to quality assurance regarding design, development, manufacturing as well as to services related to the product.

ISO14001 assures an effective environmental management system in order to help protect human health and the environment from the potential impact of our activities, products and services and to assist in maintaining and improving the quality of the environment.

Daikin units comply with the European regulations that guarantee the safety of the product.

Daikin Europe N.V. participates in the Eurovent Certification Programme for Air Conditioners (AC), Liquid Chilling Packages (LCP) and Fan Coil Units (FC); the certified data of certified models are listed in the Eurovent Directory.

DAIKIN EUROPE N.V.
Naamloze Vennootschap
Zandvoordestraat 300
B-8400 Ostend, Belgium
www.daikin.eu
BTW: BE 0412 120 336
RPR Oostende

ESiEN05-04 • 02/2007
Prepared in Belgium by Lannoo
Copyright © Daikin

ESiEN05-04