DAIKIN

R410A

TECHNICAL MANUAL

Split Unit Air Conditioner
Ceiling Cassette C & E Series

FCQN-E, FFQN-C, FCRN-E, FFRN-C

— Cooling only & Heatpump [50Hz] —

Table of Contents

Nomenclature **1**
- Indoor 1
- Outdoor 1
- Product Line-Up 2

Application Information **5**
- Operating Range 5
- Refrigerant Circuit Diagrams (C Series) 6
- Refrigerant Circuit Diagrams (E Series) 8
- Installation Guideline 11

Sound Data **16**
- Sound Pressure Level 16
- NC Curve 17

Engineering & Physical Data **21**

Performance Data **26**
- Calculation Steps 26
- Performance Tables 28

Outline & Dimension **50**

Wiring Diagram **53**

Service & Maintenance **64**

Troubleshooting **66**

Nomenclature

Indoor

FFRN 25 C X V1

Power Supply
V1: 1 phase 50 Hz 220-240V

Production
X: OYLM

Product Series
C: C Series
E: E Series

Capacity
25: 2.5 kW

Model
FFRN: Ceiling Cassette 2”x2” (Cooling Only)
FCRN: Ceiling Cassette 3”x3” (Cooling Only)
FFQN: Ceiling Cassette 2”x2” (Heatpump)
FCQN: Ceiling Cassette 3”x3” (Heatpump)

Outdoor

R(Y)N 25 C X V1

Power Supply
V1: 1 phase 50 Hz 220-240V
Y1: 3 phase 50 Hz 380-415V

Production
X: OYLM

Product Series
C: C Series
D: D Series

Capacity
25: 2.5 kW

Model
RR & RN: Single Split Condensing Unit (Cooling Only)
RYN & RQ: Single Split Condensing Unit (Heatpump)

DAIKIN_FFRN.indb 1 12/27/2012 9:28:07 AM

Product Line-Up

Indoor Unit
FCQN-E, FFQN-C, FCRN-E, FFRN-C

Nomenclature		Classification										
		Panel (Handset)				PCB				Fin	Refrigerant Control	
		BC20CXW (BRC52A62)	BYC20CXW (BRC52A61)	BC50EXW (BRC52A62)	BYC50EXW (BRC52A61)	L208A EC	L208A AP	L2CKE EC	L2CKE AP	Hydrophilic (Blue)	Cap Tube	w/o Cap Tube
COOLING	FFRN25CXV1	X				X				X		X
	FFRN35CXV1	X				X				X		X
	FFRN50CXV1	X				X				X		X
	FCRN50EXV1			X				X		X		X
	FCRN60EXV1			X				X		X		X
	FCRN71EXV1			X				X		X	X	
	FCRN100EXV1			X				X		X	X	
	FCRN125EXV1			X				X		X	X	
HEATPUMP	FFQN25CXV1		X				X			X		X
	FFQN35CXV1		X				X			X		X
	FFQN50CXV1		X				X			X		X
	FCQN50EXV1				X				X	X		X
	FCQN60EXV1				X				X	X		X
	FCQN71EXV1				X				X	X		X
	FCQN100EXV1				X				X	X		X
	FCQN125EXV1				X				X	X		X

DAIKIN_FFRN.indb 2 12/27/2012 9:28:07 AM

Outdoor Unit
R(Y)N / RR / RQ

Nomenclature		Classification											
		Refrigerant Control		Fin			Safety Devices				Compressor		Others
		Cap Tube	TXV	Hydrophilic (Blue)	Hydrophilic (Gold)	Bare Aluminium	Contactor	High Pressure Switch	Low Pressure Switch	Phase Sequencer	Scroll	Rotary	Drain Elbow
COOLING	RN25CXV1	X				X						X	
	RN25CGXV1	X			X							X	
	RN35CXV1	X				X						X	
	RN35CGXV1	X			X							X	
	RN50CXV1	X				X						X	
	RN50CGXV1	X			X							X	
	RN60CXV1	X				X						X	
	RN60CGXV1	X			X							X	
	RR71CXV1	X				X						X	
	RR71CGXV1	X			X							X	
	RR90DXV1	X				X		X	X		X		
	RR90DGXV1	X			X			X	X		X		
	RR100DXV1	X				X		X	X		X		
	RR100DGXV1	X			X			X	X		X		
	RR100DXY1	X				X	X	X	X	X	X		
	RR100DGXY1	X			X		X	X	X	X	X		
	RR125DXY1	X				X	X	X	X	X	X		
	RR125DGXY1	X			X		X	X	X	X	X		

DAIKIN_FFRN.indb 3 12/27/2012 9:28:07 AM

Nomenclature		Classification											
		Refrigerant Control		Fin			Safety Devices				Compressor		Others
		Cap Tube	TXV	Hydrophilic (Blue)	Hydrophilic (Gold)	Bare Aluminium	Contactor	High Pressure Switch	Low Pressure Switch	Phase Sequencer	Scroll	Rotary	Drain Elbow
HEATPUMP	RYN25CXV1	X				X						X	X
	RYN25CGXV1	X			X							X	X
	RYN35CXV1	X				X						X	X
	RYN35CGXV1	X			X							X	X
	RYN50CXV1	X				X						X	X
	RYN50CGXV1	X			X							X	X
	RYN60CXV1	X				X						X	X
	RYN60CGXV1	X			X							X	X
	RQ71CXV1	X				X						X	X
	RQ71CGXV1	X			X							X	X
	RQ90DXV1	X				X		X	X		X		X
	RQ90DGXV1	X			X			X	X		X		X
	RQ100DXV1	X				X		X	X		X		X
	RQ100DGXV1	X			X			X	X		X		X
	RQ100DXY1	X				X	X	X	X	X	X		X
	RQ100DGXY1	X			X		X	X	X	X	X		X
	RQ125DXY1	X				X	X	X	X	X	X		X
	RQ125DGXY1	X			X		X	X	X	X	X		X

DAIKIN_FFRN.indb 4 12/27/2012 9:28:08 AM

Application Information

Operating Range

Ensure the operating temperature is in allowance range.

Cooling

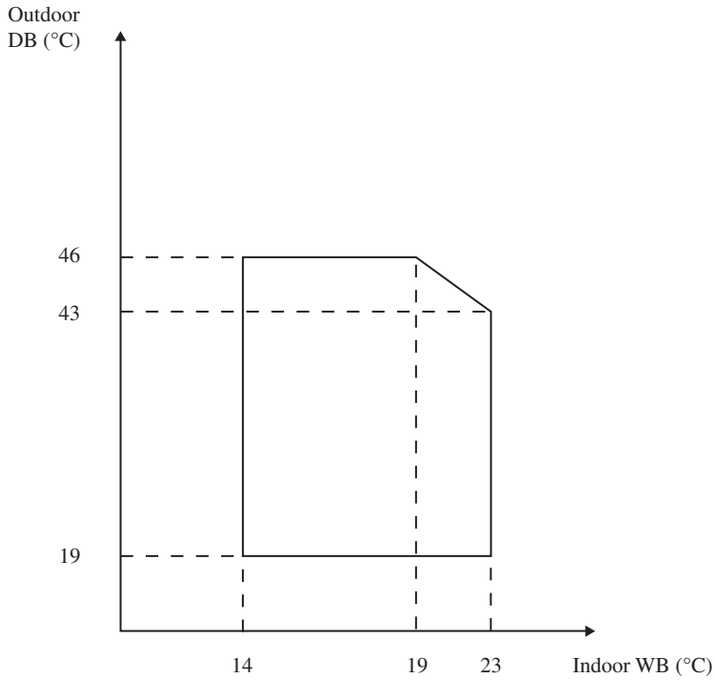

⚠ Caution :

The use of your air conditioner outside the range of working temperature and humidity can result in serious failure.

Heating

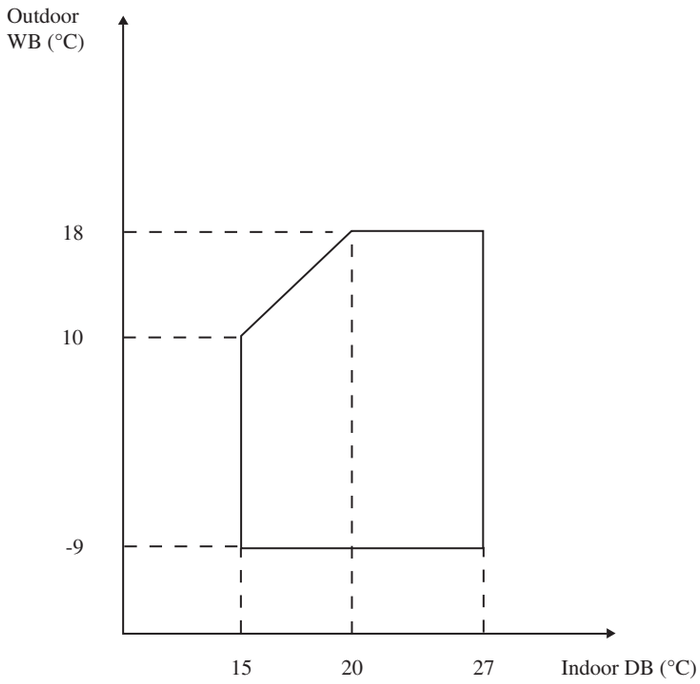

⚠ Caution :

The use of your air conditioner outside the range of working temperature and humidity can result in serious failure.

DAIKIN_FFRN.indb 5 12/27/2012 9:28:08 AM

Refrigerant Circuit Diagrams (C Series)

Model: FFRN25CXV1 – RN25CXV1 / FFRN35CXV1 – RN35CXV1 / FFRN50CXV1 – RN50CXV1

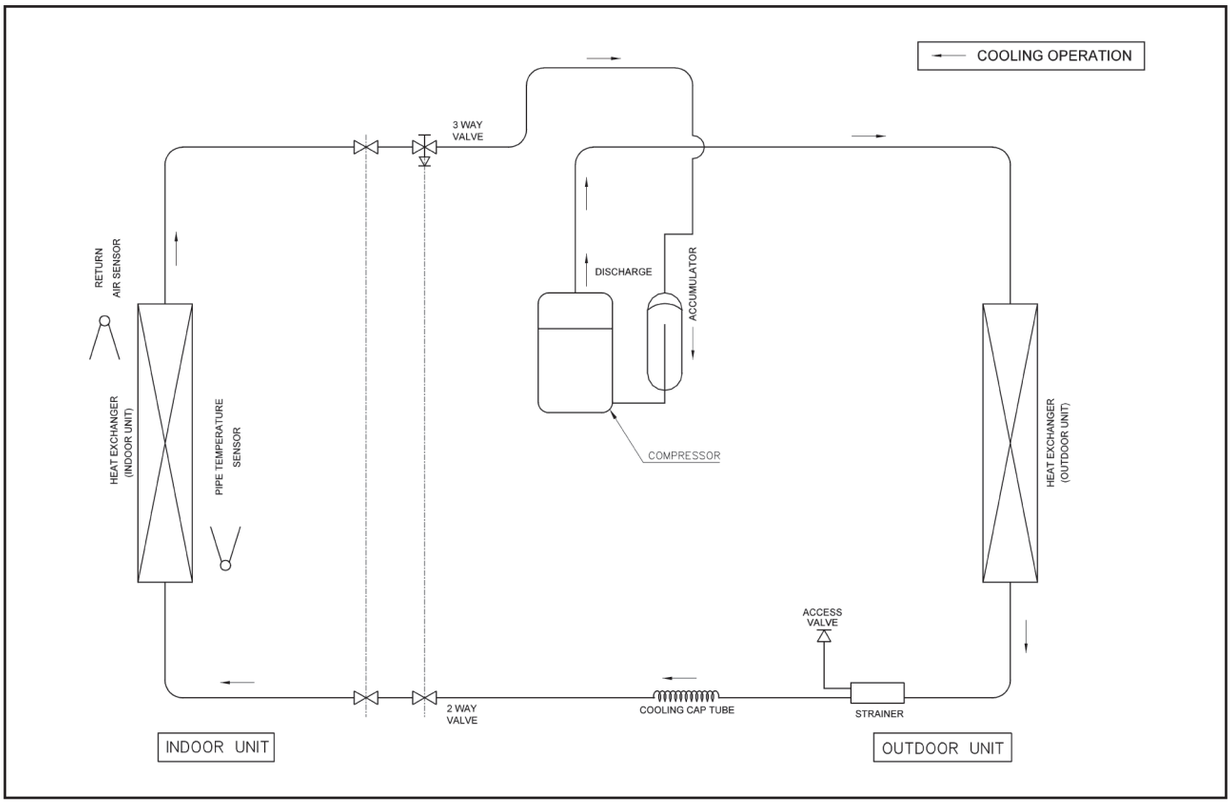

Model: FFQN25CXV1 – RYN25CXV1

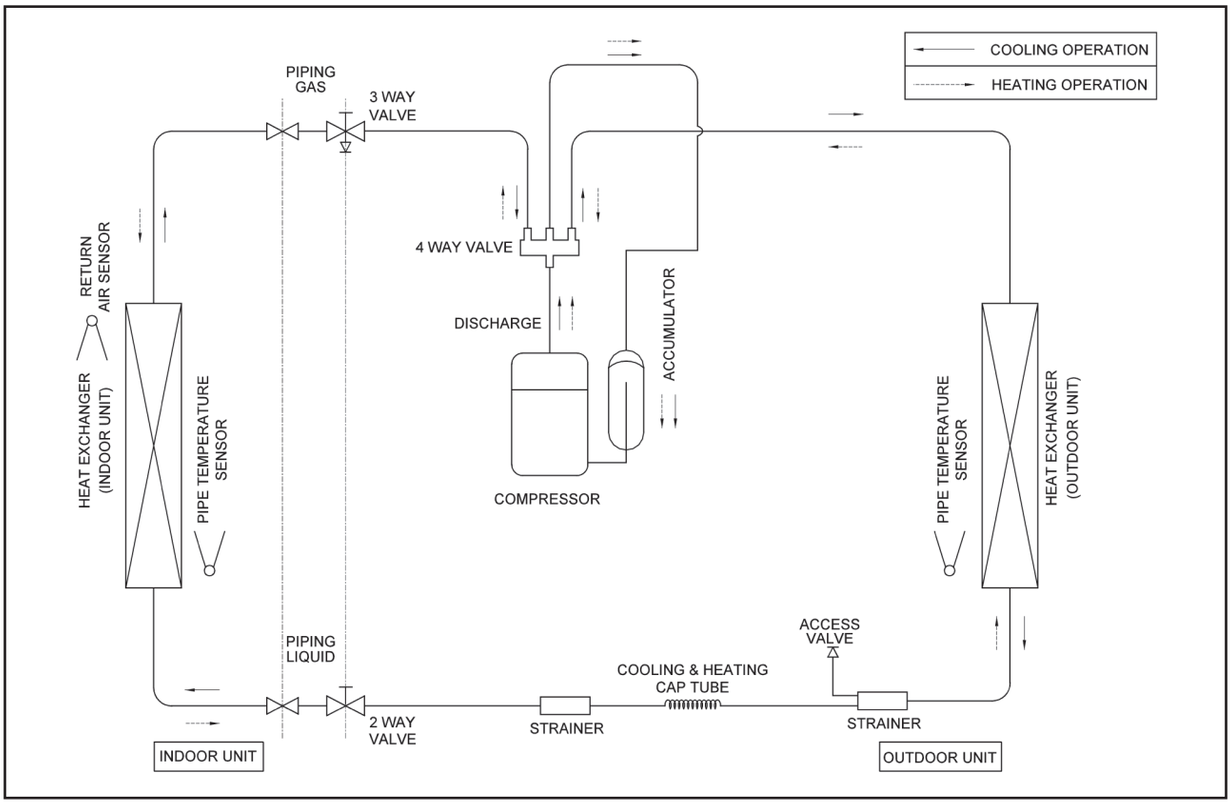

DAIKIN_FFRN.indb 6 12/27/2012 9:28:08 AM

Model: FFQN35CXV1 – RYN35CXV1 / FFQN50CXV1 – RYN50CXV1

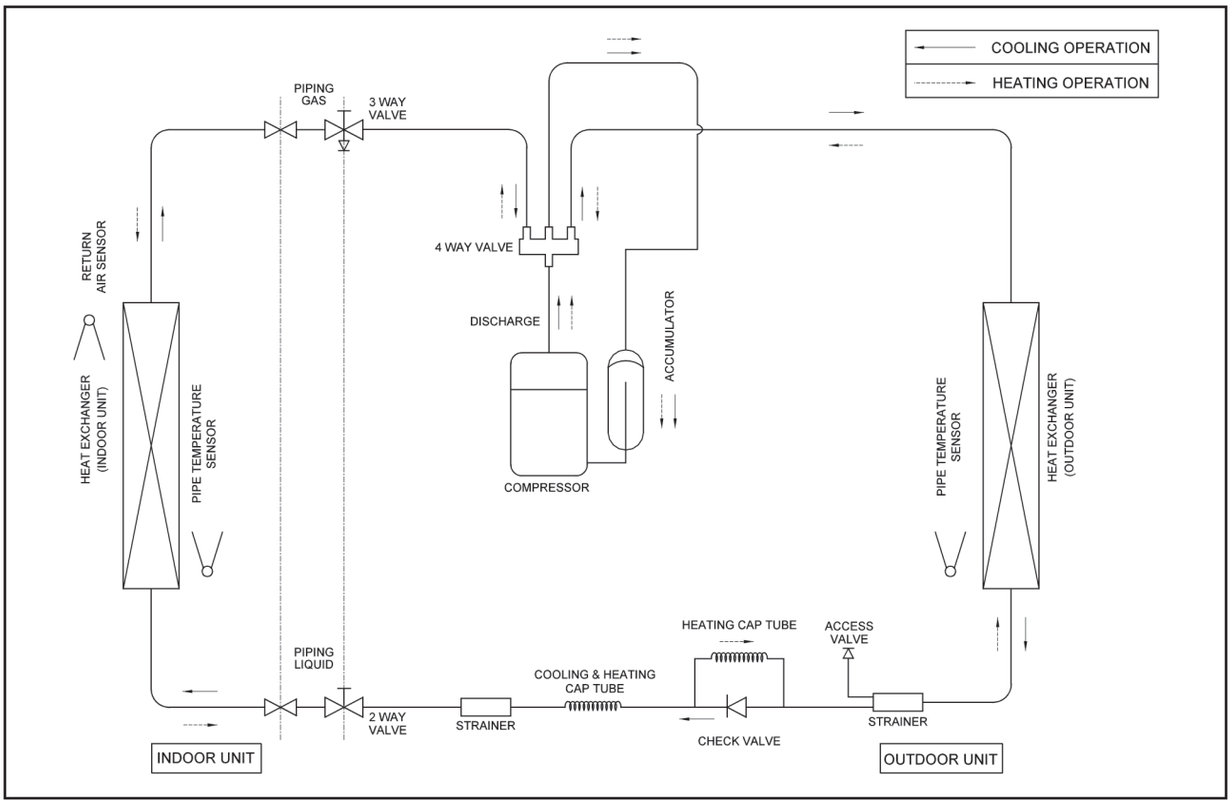

DAIKIN_FFRN.indb 7 12/27/2012 9:28:08 AM

Refrigerant Circuit Diagrams (E Series)

Model: FCRN50EXV1 – RN50CXV1 / FCRN60EXV1 – RN60CXV1

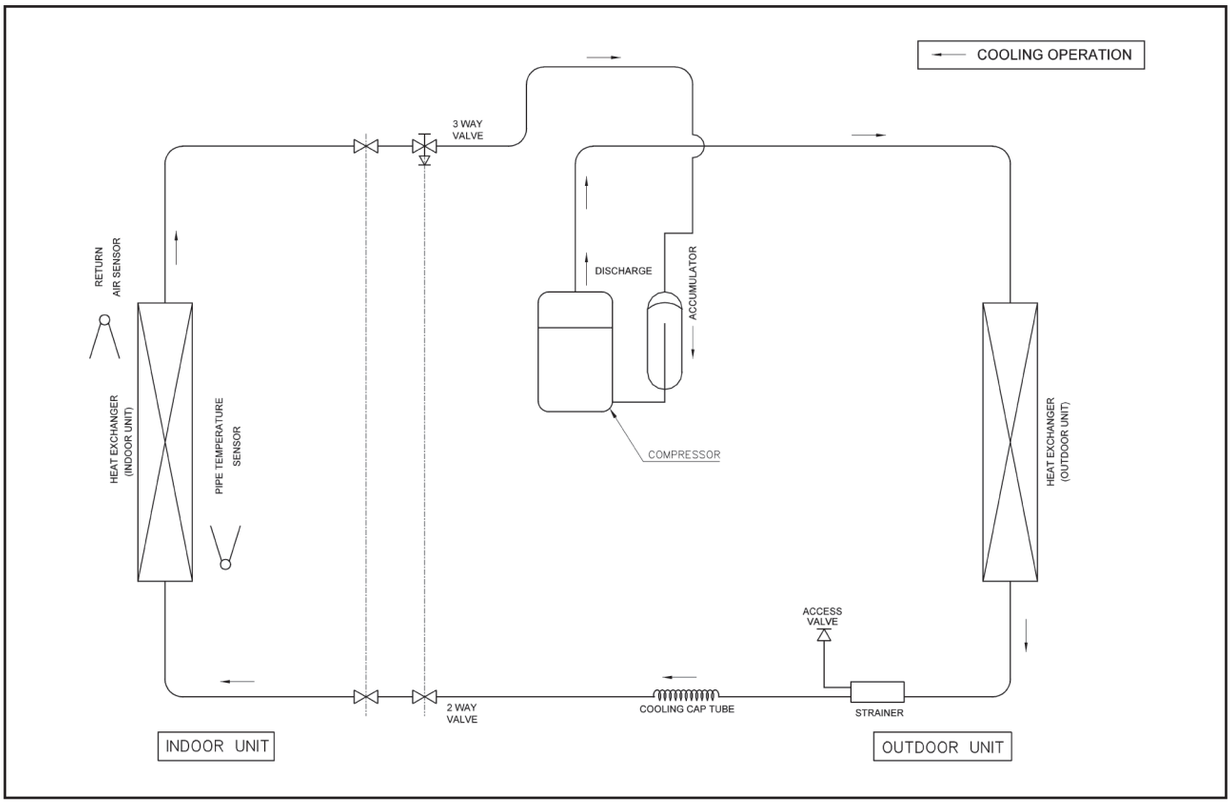

Model: FCRN71EXV1 – RR71CXV1

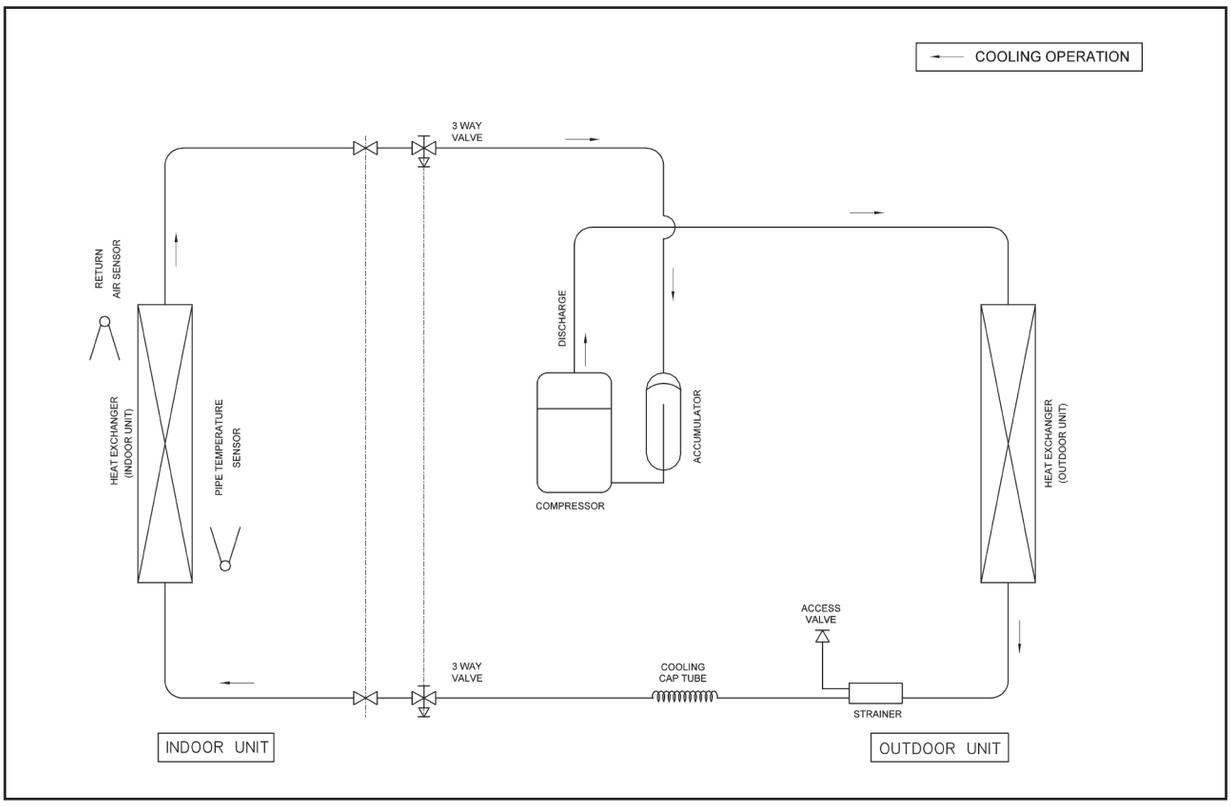

DAIKIN_FFRN.indb 8 12/27/2012 9:28:08 AM

Model: FCRN100EXV1 – RR90DXV1 / FCRN100EXV1 – RR100DXV1 / FCRN100EXV1 – RR100DXY1 / FCRN125EXV1 – RR125DXY1

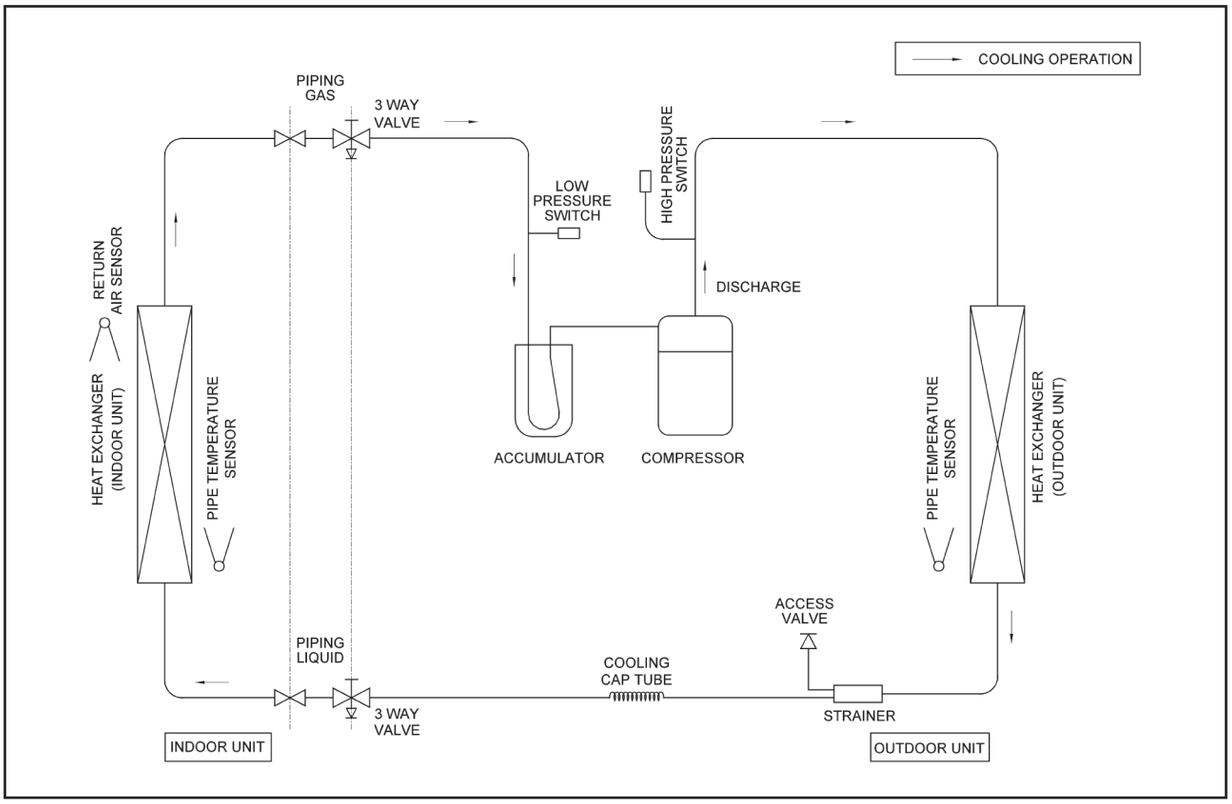

Model: FCQN50EXV1 – RYN50CXV1 / FCQN60EXV1 – RYN60CXV1

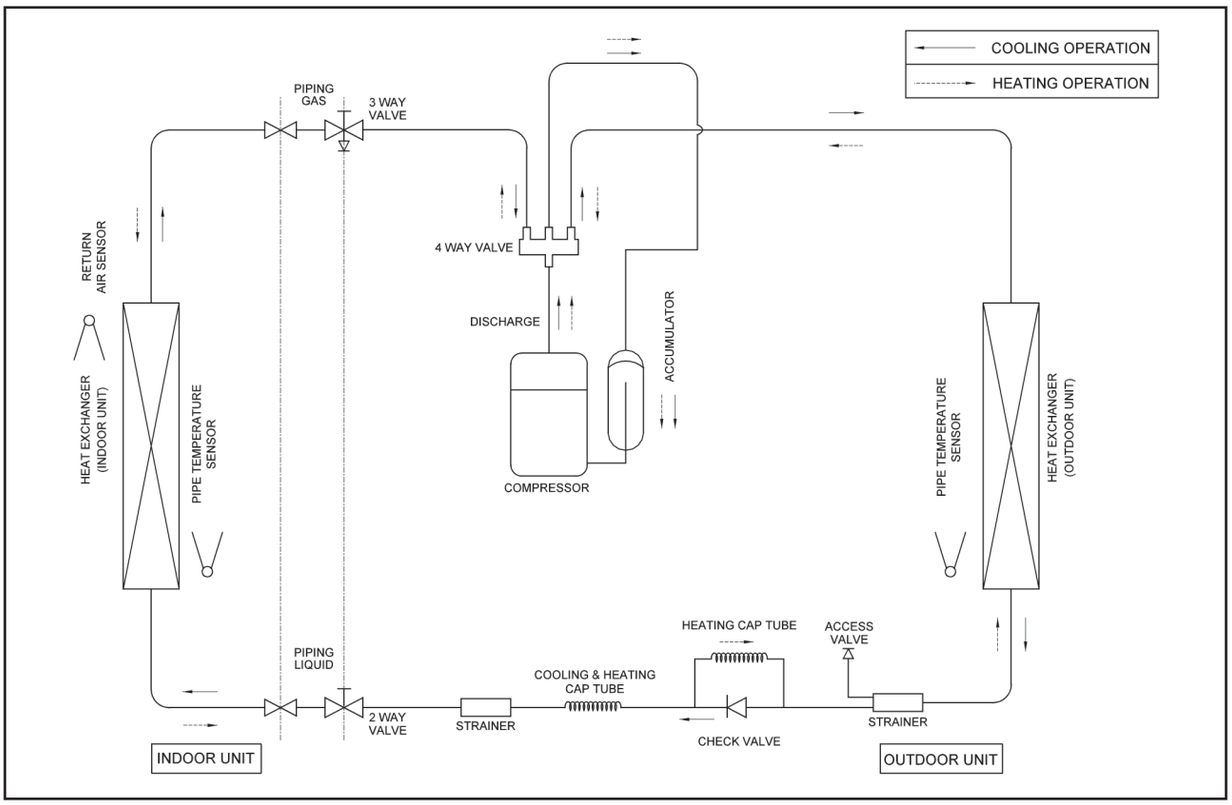

DAIKIN_FFRN.indb 9 12/27/2012 9:28:08 AM

Model: FCQN71EXV1 – RQ71CXV1

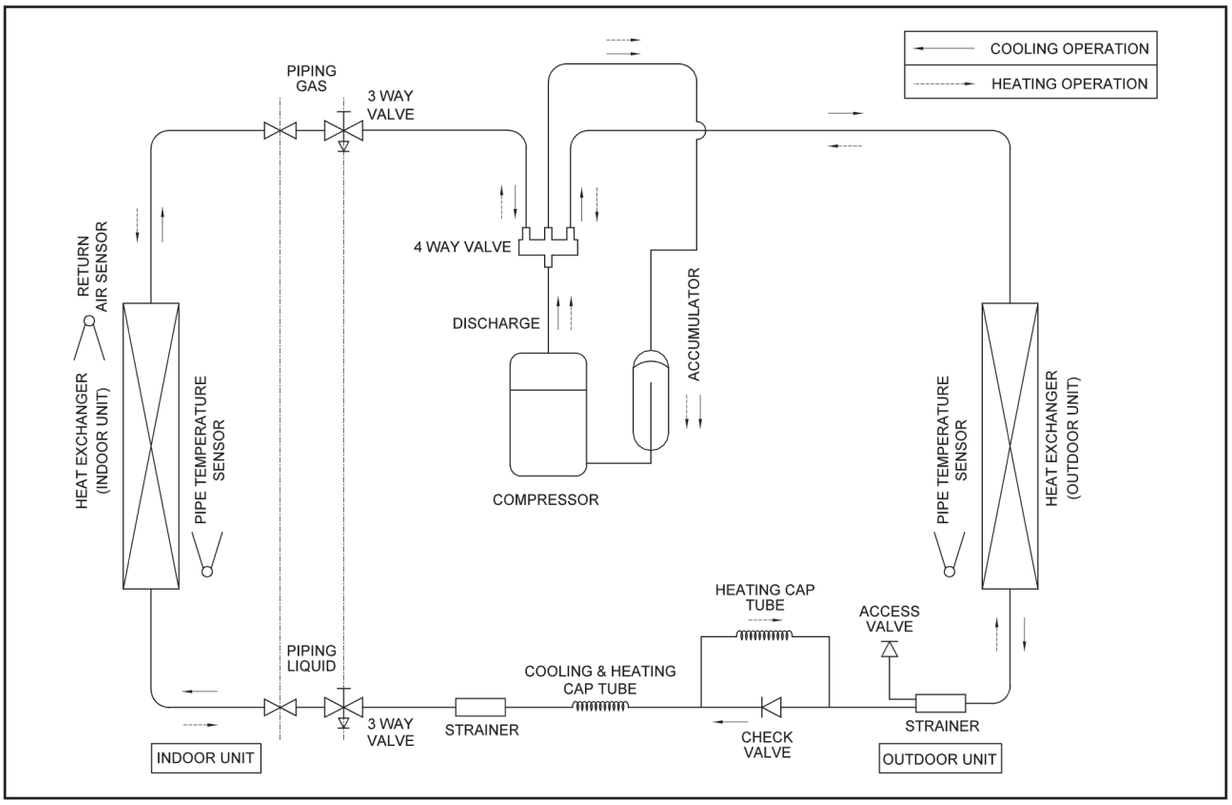

Model: FCQN100EXV1 – RQ90DXV1 / FCQN100EXV1 – RQ100DXV1 / FCQN100EXV1 – RR100DXY1 / FCQN125EXV1 – RR125DXY1

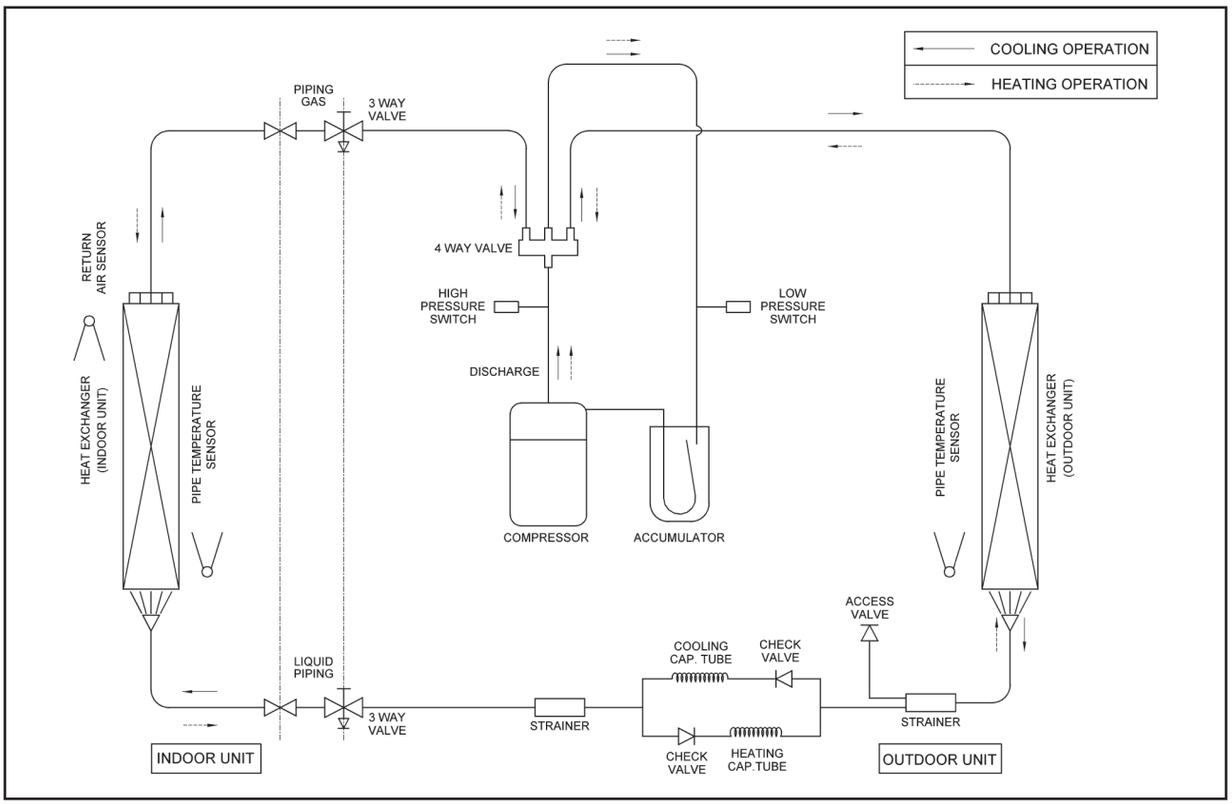

DAIKIN_FFRN.indb 10 12/27/2012 9:28:08 AM

Installation Guideline

Safety Precautions

⚠ WARNING

- Installation and maintenance should be performed by qualified persons who are familiar with local code and regulation, and experienced with this type of appliance.
- All field wiring must be installed in accordance with the national wiring regulation.
- Ensure that the rated voltage of the unit corresponds to that of the name plate before commencing wiring work according to the wiring diagram.
- The unit must be GROUNDED to prevent possible hazard due to insulation failure.
- All electrical wiring must not touch the refrigerant piping or any moving parts of the fan motors.
- Confirm that the unit has been switched OFF before installing or servicing the unit.
- Disconnect from the main power supply before servicing the air conditioner unit.
- DO NOT pull out the power cord when the power is ON. This may cause serious electrical shocks which may result in fire hazards.
- Keep the indoor and outdoor units, power cable and transmission wiring, at least 1m from TVs and radios, to prevent distorted pictures and static. {Depending on the type and source of the electrical waves, static may be heard even when more than 1m away}.

⚠ CAUTION

Please take note of the following important points when installing.

- **Do not install the unit where leakage of flammable gas may occur.**

  If gas leaks and accumulates around the unit, it may cause fire ignition.

- **Ensure that drainage piping is connected properly.**

  If the drainage piping is not connected properly, it may cause water leakage which will dampen the furniture.

- **Do not overcharge the unit.**

  This unit is factory pre-charged. Overcharge will cause over-current or damage to the compressor.

- **Ensure that the unit's panel is closed after service or installation.**

  Unsecured panels will cause the unit to operate noisily.

- **Sharp edges and coil surfaces are potential locations which may cause injury hazards. Avoid from being in contact with these places.**
- **Before turning off the power supply, set the remote controller's ON/OFF switch to the "OFF" position to prevent the nuisance tripping of the unit.** If this is not done, the unit's fans will start turning automatically when power resumes, posing a hazard to service personnel or the user.
- **Do not operate any heating apparatus too close to the air conditioner unit.** This may cause the plastic panel to melt or deform as a result of the excessive heat.
- **Ensure the color of wires of the outdoor unit and the terminal markings are same to the indoors respectively.**
- **IMPORTANT : DO NOT INSTALL OR USE THE AIR CONDITIONER UNIT IN A LAUNDRY ROOM.**
- **Do not use joined and twisted wires for incoming power supply.**

NOTICE

Disposal requirements

Your air conditioning product is marked with this symbol. This means that electrical and electronic products shall not be mixed with unsorted household waste.

Do not try to dismantle the system yourself: the dismantling of the air conditioning system, treatment of the refrigerant, of oil and of other parts must be done by a qualified installer in accordance with relevant local and national legislation. Air conditioners must be treated at a specialized treatment facility for re-use, recycling and recovery. By ensuring this product is disposed of correctly, you will help to prevent potential negative consequences for the environment and human health. Please contact the installer or local authority for more information.

Batteries must be removed from the remote controller and disposed of separately in accordance with relevant local and national legislation.

DAIKIN_FFRN.indb 11 12/27/2012 9:28:08 AM

1) Indoor Installation Clearance

Clearance must be provided for the indoor unit from wall and obstacles as shown in figure below.

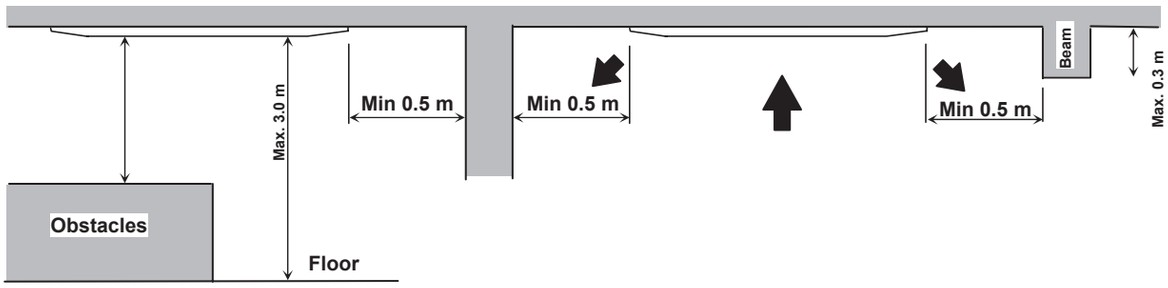

The installation place (handling ceiling surface) must be level and the height in the ceiling is 350mm or more.

2) Outdoor Installation Clearance

Outdoor unit must be installed such that there is no short circuit of the hot discharge air or obstruction to smooth air flow. Select the coolest possible place where intake air should not hotter than the outside temperature (Max. 45°C).

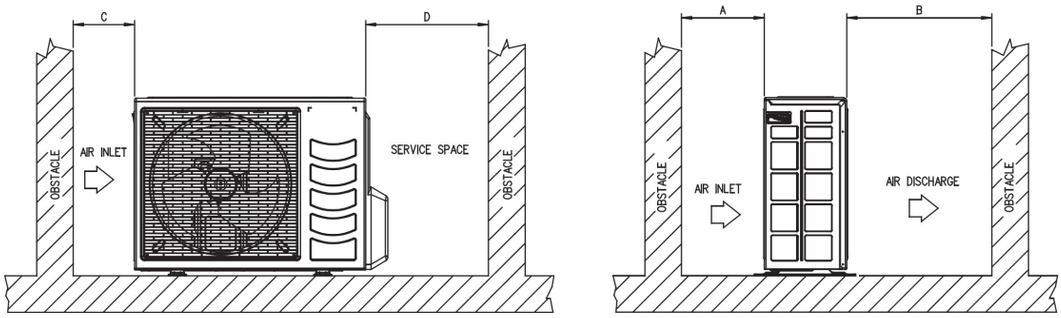

ALL MODELS	A	B	C	D
Minimum Distance	300 mm	1000 mm	300 mm	500 mm

⚠ Caution

If the condensing unit is operated in an atmosphere containing oils (including machine oils), salt (coastal area), sulphide gas (near hot spring, oil refinery plant), such substances may lead to failure the unit.

DAIKIN_FFRN.indb 12 12/27/2012 9:28:09 AM

3) Cable Size

Cooling only

Model	Unit	FFRN25/35CXV1	FFRN50CXV1	FCRN50EXV1
		RN25/35CXV1	RN50CXV1	RN50CXV1
Power supply cable size Number of wire	mm²	1.5 3	2.5 3	2.5 3
Interconnection cable size Number of wire	mm²	1.5 3	2.5 3	2.5 3
Recommended fuse	A	15	20	13

Model	Unit	FCRN60EXV1	FCRN71EXV1	FCRN100EXV1
		RN60CXV1	RR71CXV1	RR90DXV1
Power supply cable size Number of wire	mm²	2.5 3	4.0 3	4.0 3
Interconnection cable size Number of wire	mm²	2.5 3	2.5 3	2.5 4
Recommended fuse	A	18	25	25

Model	Unit	FCRN100EXV1	FCRN100EXV1	FCRN125EXV1
		RR100DXV1	RR100DXY1	RR125DXY1
Power supply cable size Number of wire	mm²	4.0 3	2.5 5	4.0 5
Interconnection cable size Number of wire	mm²	2.5 4	1.5 4	1.5 4
Recommended fuse	A	30	13	18

Heatpump

Model	Unit	FFQN25/35CXV1	FFQN50CXV1	FCQN50EXV1
		RYN25/35CXV1	RYN50CXV1	RYN50CXV1
Power supply cable size Number of wire	mm²	1.5 3	2.5 3	2.5 3
Interconnection cable size Number of wire	mm²	1.5 5	2.5 5	2.5 5
Recommended fuse	A	15	20	13

Model	Unit	FCQN60EXV1	FCQN71EXV1	FCQN100EXV1
		RYN60CXV1	RQ71CXV1	RQ90DXV1
Power supply cable size Number of wire	mm²	2.5 3	4.0 3	4.0 3
Interconnection cable size Number of wire	mm²	2.5 5	2.5 5	2.5 3 & 4
Recommended fuse	A	18	25	25

Model	Unit	FCQN100EXV1	FCQN100EXV1	FCQN125EXV1
		RQ100DXV1	RQ100DXY1	RQ125DXY1
Power supply cable size Number of wire	mm²	4.0 3	2.5 5	2.5 5
Interconnection cable size Number of wire	mm²	2.5 3 & 4	1.5 3 & 4	1.5 3 & 4
Recommended fuse	A	30	13	18

DAIKIN_FFRN.indb 13 12/27/2012 9:28:09 AM

4) Refrigerant Piping

When the pipe length becomes too long, both the capacity and reliability drop. As the number of bends increases, system piping resistance to the refrigerant flow increases, thus lowering the cooling capacity, and as the result the compressor may become defective. Always choose the shortest path and follow the recommendation as tabulated below:

Model	Indoor	FFRN25CXV1 FFQN25CXV1	FFRN35CXV1 FFQN35CXV1	FFRN50CXV1 FFQN50CXV1
	Outdoor	R(Y)N25CXV1	R(Y)N35CXV1	R(Y)N50CXV1
Max. Length, m		12	12	15
Max. Elevation, m		5	5	8
Max. No. of Bends		10	10	10

Model	Indoor	FCRN50EXV1 FCQN50EXV1	FCRN60EXV1 FCQN60EXV1	FCRN71EXV1 FCQN71EXV1
	Outdoor	R(Y)N50CXV1	R(Y)N60CXV1	RR71CXV1 RQ71CXV1
Max. Length, m		15	15	15
Max. Elevation, m		8	8	8
Max. No. of Bends		10	10	10

Model	Indoor	FCRN100EXV1 FCQN100EXV1		FCRN125EXV1 FCQN125EXV1
	Outdoor	RR90/100DXV1 RQ90/100DXV1	RR100DXY1 RQ100DXY1	RR125DXY1 RQ125DXY1
Max. Length, m		45		45
Max. Elevation, m		25		25
Max. No. of Bends		10		10

Piping sizes (flare connection type) are as follows:

Model	R(Y)N25CXV1	R(Y)N35CXV1	R(Y)N50CXV1
Liquid, mm / in	6.35 / 1/4	6.35 / 1/4	6.35 / 1/4
Suction, mm / in	9.52 / 3/8	12.70 / 1/2	12.70 / 1/2

Model	R(Y)N60CXV1	RR71CXV1 RQ71CXV1	RR90DXV1 RQ90DXV1
Liquid, mm / in	6.35 / 1/4	9.52 / 3/8	9.52 / 3/8
Suction, mm / in	15.88 / 5/8	15.88 / 5/8	15.88 / 5/8

Model	RR100DXV1 RQ100DXV1	RR100DXY1 RQ100DXY1	RR125DXY1 RQ125DXY1
Liquid, mm / in	9.52 / 3/8		
Suction, mm / in	15.88 / 5/8		

DAIKIN_FFRN.indb 14 12/27/2012 9:28:09 AM

5) Additional Charge

- The refrigerant charge has already charged into the outdoor unit. For the piping length of 7.6m, additional refrigerant charge after vacuuming is not necessary.
- When the piping length is more than 7.6m, please use the table below (unit in gram).

Cooling Only

Indoor	FFRN25CXV1	FFRN35CXV1	FFRN50CXV1
Outdoor	RN25CXV1	RN35CXV1	RN50CXV1
Add. Charge, g/m	11	9	10

Indoor	FCRN50EXV1	FCRN60EXV1	FCRN71EXV1
Outdoor	RN50CXV1	RN60CXV1	RR71CXV1
Add. Charge, g/m	22	10	24

Indoor	FCRN100EXV1			FCRN125EXV1
Outdoor	RR90/100DXV1	RR100DXV1	RR100DXY1	RR125DXY1
Add. Charge, g/m	27	24	24	24

Heatpump

Indoor	FFQN25CXV1	FFQN35CXV1	FFQN50CXV1
Outdoor	RYN25CXV1	RYN35CXV1	RYN50CXV1
Add. Charge, g/m	15	18	12

Indoor	FCQN50EXV1	FCQN60EXV1	FCQN71EXV1
Outdoor	RYN50CXV1	RYN60CXV1	RQ71CXV1
Add. Charge, g/m	16	16	41

Indoor	FCQN100EXV1			FCQN125EXV1
Outdoor	RQ90/100DXV1	RQ100DXV1	RQ100DXY1	RQ125DXY1
Add. Charge, g/m	42	37	37	39

Example: FCRN60EXV1 & RN60CXV1 with 13m piping length, additional piping length is 5.5m. Thus,
Additional Charge = 5.5m x 10 g/m
= 55g

DAIKIN_FFRN.indb 15 12/27/2012 9:28:09 AM

Sound Data

Sound Pressure Level

Model	Speed	1/1 Octave Sound Pressure (dB, ref 20μPa)							Overall (dBA)	Noise Criteria
		125Hz	250Hz	500Hz	1kHz	2kHz	4kHz	8kHz		
FF(R)(Q)N25CXV1	High	42	45	40	35	27	20	10	41	35
	Med	40	42	37	32	24	15	7	38	32
	Low	38	40	34	28	20	10	5	35	29
FF(R)(Q)N35CXV1	High	45	45	40	35	27	20	11	41	35
	Med	41	42	37	32	23	15	9	38	32
	Low	38	38	33	28	18	9	8	34	28
FF(R)(Q)N50CXV1	High	48	47	43	38	30	24	14	44	38
	Med	46	45	40	35	26	19	9	41	35
	Low	44	40	36	31	21	12	5	37	31
FC(R)(Q)N50EXV1	High	37	38	35	26	17	8	6	34	30
	Med	35	35	34	22	12	6	6	32	29
	Low	34	31	31	18	9	6	6	30	25
	Quiet	32	28	29	16	7	4	5	28	23
FC(R)(Q)N60EXV1	High	39	40	37	29	22	12	6	37	32
	Med	37	37	34	25	17	8	4	34	29
	Low	37	37	34	23	15	7	7	33	29
	Quiet	36	36	33	22	12	7	8	32	28
FC(R)(Q)N71EXV1	High	46	44	43	36	30	23	12	42	38
	Med	39	40	38	30	23	15	7	38	37
	Low	38	38	35	26	19	9	5	35	34
	Quiet	36	36	33	24	15	6	5	33	30
FC(R)(Q)N100EXV1	High	51	48	47	41	33	31	18	47	43
	Med	52	44	44	37	28	24	11	44	39
	Low	50	41	40	33	23	15	8	40	35
	Quiet	46	36	37	26	15	6	6	36	32
FC(R)(Q)N125EXV1	High	52	50	48	44	35	34	22	49	44
	Med	53	45	44	39	29	28	14	45	39
	Low	53	43	42	37	27	24	10	43	37
	Quiet	51	41	39	32	23	16	6	39	34

Model	Measuring Location
FF(R)(Q)N25/35/50CXV1 **FC(R)(Q)N50/60/71EXV1**	Standard : JIS C 9612 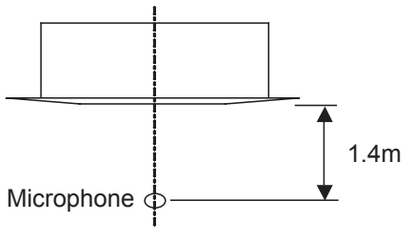
FC(R)(Q)N100EXV1 **FC(R)(Q)N125EXV1**	Standard: JIS B 8616 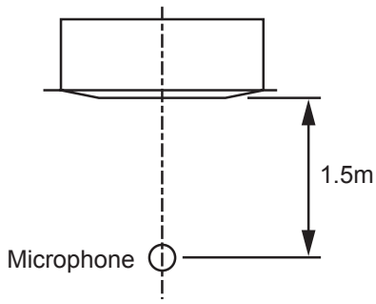

DAIKIN_FFRN.indb 16 12/27/2012 9:28:09 AM

NC Curve

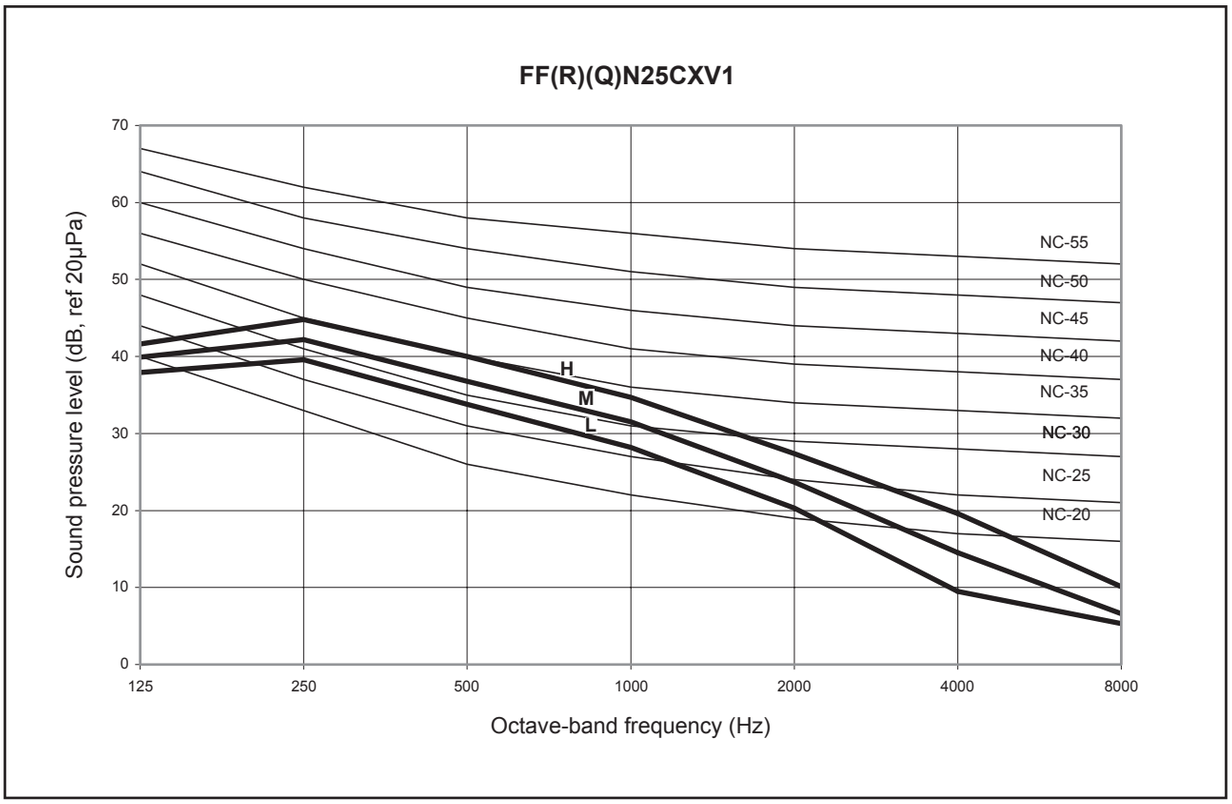

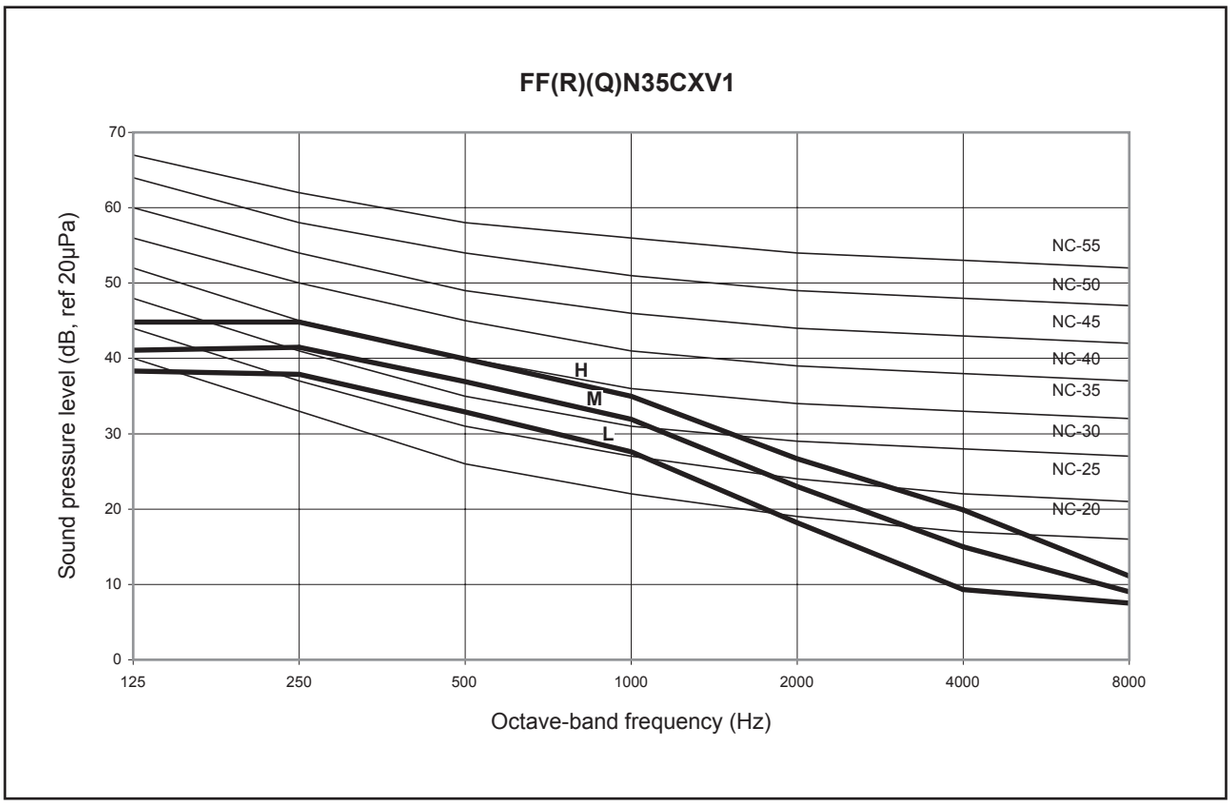

DAIKIN_FFRN.indb 17 12/27/2012 9:28:09 AM

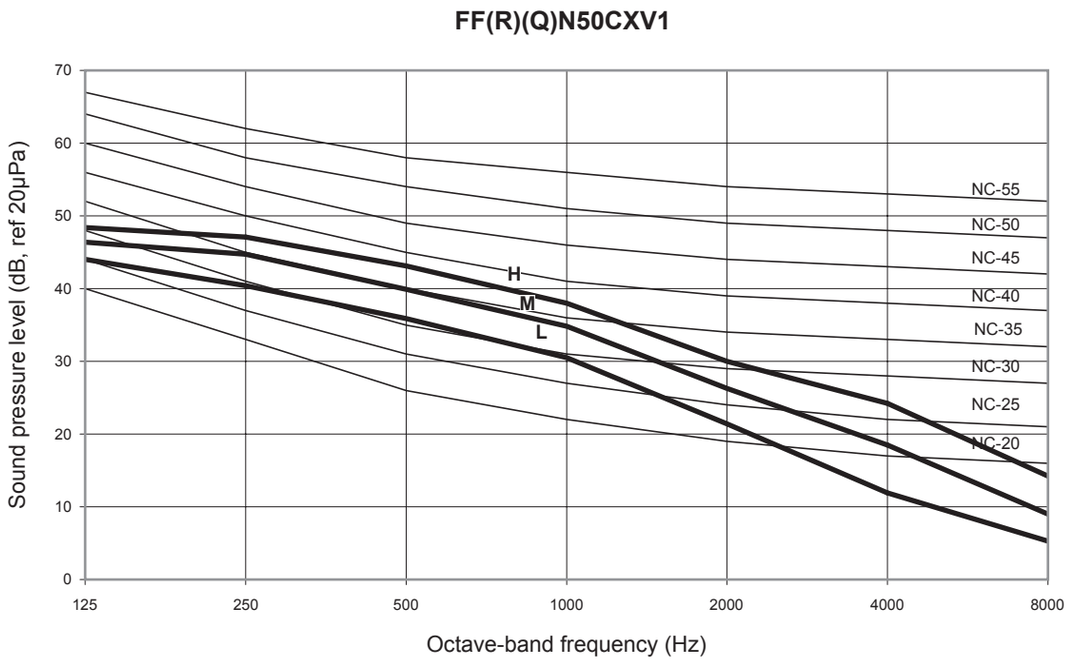

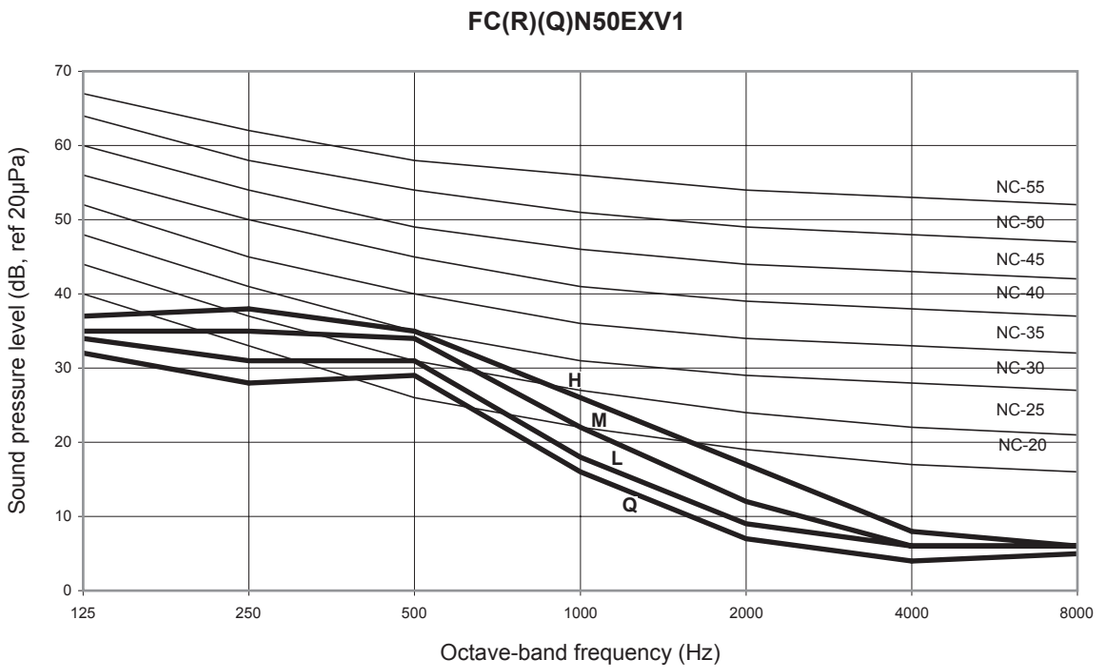

DAIKIN_FFRN.indb 18 12/27/2012 9:28:09 AM

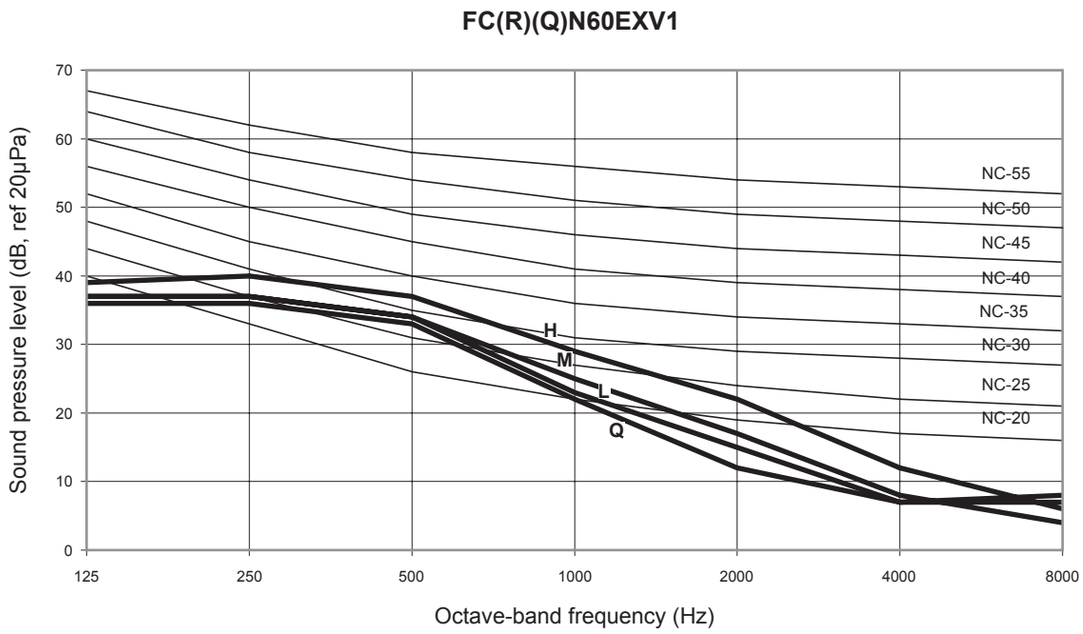

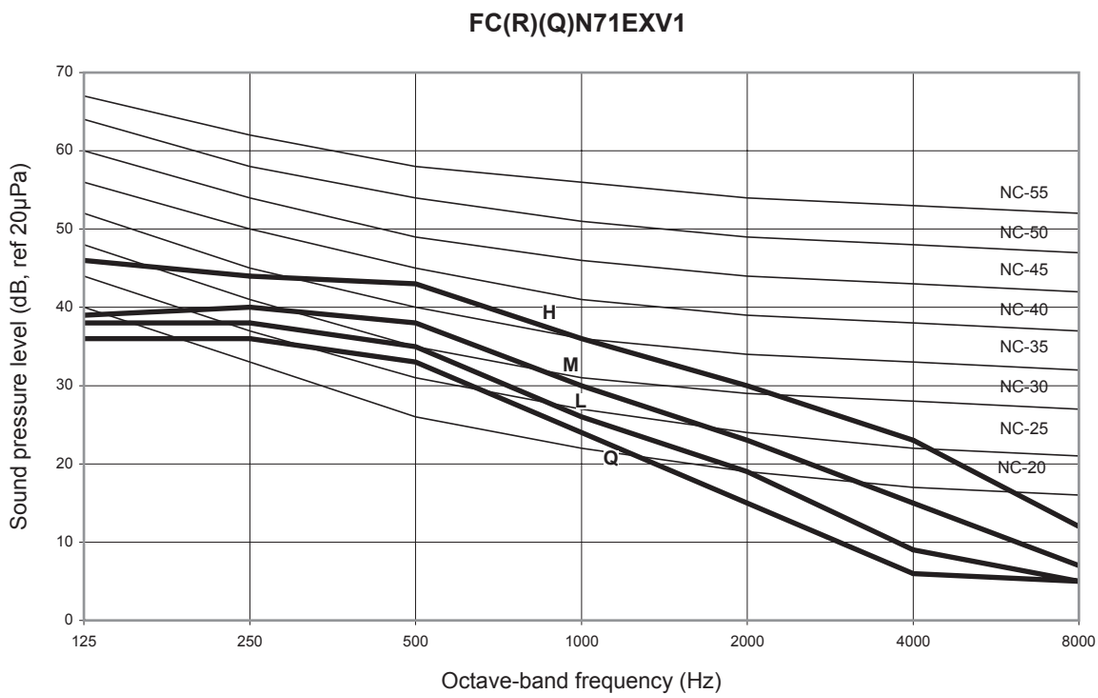

DAIKIN_FFRN.indb 19 12/27/2012 9:28:09 AM

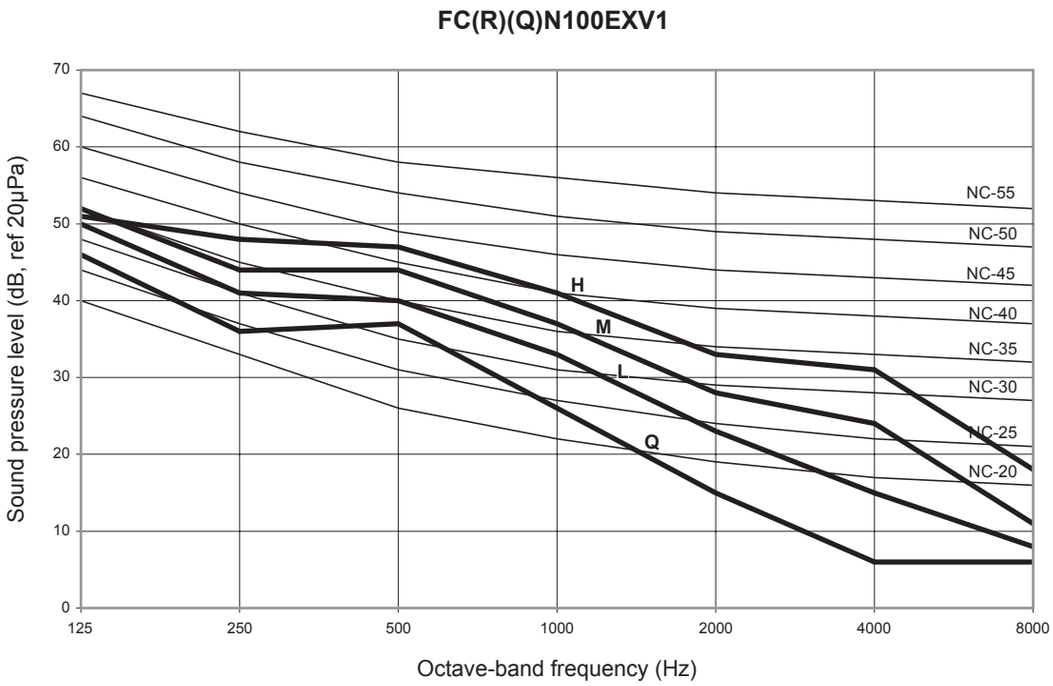

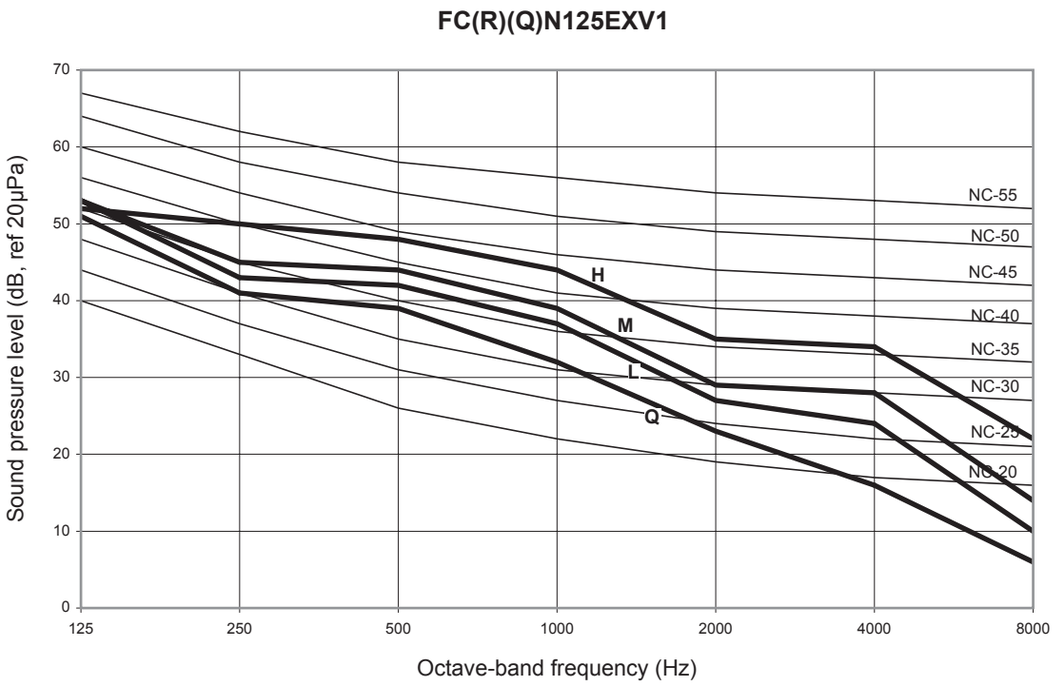

DAIKIN_FFRN.indb 20 12/27/2012 9:28:09 AM

Engineering & Physical Data

Engineering Data - R410A model

MODEL	INDOOR UNIT			FFRN25CXV1	FFRN35CXV1	FFRN50CXV1	
	OUTDOOR UNIT			RN25CXV1	RN35CXV1	RN50CXV1	
NOMINAL COOLING CAPACITY			Btu/h	9500	12500	17500	
			W	2780	3660	5129	
NOMINAL TOTAL INPUT POWER (COOLING)			W	900	1300	1690	
NOMINAL RUNNING CURRENT (COOLING)			A	4	5.90	7.72	
EER			W/W	3.09	2.82	3.03	
REFRIGERANT CONTROL (EXPANSION DEVICE)				OUTDOOR CAPILLARY TUBE			
REFRIGERANT CHARGE			kg	0.73	0.83	1.38	
MODEL	INDOOR UNIT			FFQN25CXV1	FFQN35CXV1	FFQN50CXV1	
	OUTDOOR UNIT			RYN25CXV1	RYN35CXV1	RYN50CXV1	
NOMINAL COOLING CAPACITY			Btu/h	9500	12500	17500	18000
			W	2780	3660	5129	5280
NOMINAL HEATING CAPACITY			Btu/h	9500	11500	17500	18000
			W	2780	3370	5129	5420
NOMINAL TOTAL INPUT POWER (COOLING)			W	900	1300	1690	1724
NOMINAL TOTAL INPUT POWER (HEATING)			W	830	1020	1710	1494
NOMINAL RUNNING CURRENT (COOLING)			A	4	5.9	7.72	3.3
NOMINAL RUNNING CURRENT (HEATING)			A	3.7	4.60	7.75	2.80
EER			W/W	3.09	2.82	3.03	3.06
COP			W/W	3.35	3.30	3.00	3.63
REFRIGERANT CONTROL (EXPANSION DEVICE)				OUTDOOR CAPILLARY TUBE			
REFRIGERANT CHARGE			kg	0.73	0.83	1.38	1.38
POWER SOURCE			V/Ph/Hz	220 - 240 /1/50			
REFRIGERANT TYPE				R410A			
INDOOR UNIT	CONTROL	AIR DISCHARGE		4 WAY AUTOMATIC LOUVER (UP & DOWN)			
		OPERATION		WIRELESS MICROCOMPUTER REMOTE CONTROL			
	AIR FLOW	HIGH	I/s / CFM	194 / 410	194 / 410	212 / 450	212 / 450
		MEDIUM	I/s / CFM	170 / 360	170 / 360	194 / 410	194 / 410
		LOW	I/s / CFM	156 / 330	156 / 330	160 / 340	160 / 340
	SOUND PRESSURE LEVEL (H/M/L)		dBA	41 / 38 / 35	41 / 38 / 34	44 / 41 / 37	44 / 41 / 37
	UNIT DIMENSION [Panel]	HEIGHT X WIDTH X DEPTH	mm	250X 570 X 570 [295 x 640 x 640]			
	PACKING DIMENSION	HEIGHT X WIDTH X DEPTH	mm	317 X 630 X 630			
	UNIT WEIGHT (UNIT + PANEL)		kg	22 + 2	23 + 2	23 + 2	23 + 2
	CONDENSATE DRAIN SIZE		mm	19.05			
	FAN	TYPE		TURBO			
		DRIVE		DIRECT			
	FAN MOTOR	TYPE		INDUCTION			
		INDEX OF PROTECTION (IP)		IP20			
		INSULATION GRADE		CLASS B			
		RATED INPUT POWER	W	55	65	59	59
		RATED RUNNING CURRENT	A	0.24	0.29	0.25	0.25
		MOTOR MAX OUTPUT	W	19	23	28	28
		POLES		6			
	COIL	TUBE	MATERIAL	SEAMLESS INNER GROOVE COPPER			
			DIAMETER	7			
		FIN	MATERIAL	ALUMINIUM (SLIT FIN)			
			FACE AREA	0.318			
			ROW	1	2		
	AIR QUALITY	FILTER	TYPE	WASHABLE SARANET FILTER			
			QUANTITY	1			
	CASING		COLOUR	WITHOUT PAINT			
OUTDOOR UNIT	AIR FLOW		I/s / CFM	396 / 840	453 / 960	614 / 1300	614 / 1300
	SOUND PRESSURE LEVEL		dBA	46	49	52	52
	UNIT DIMENSION	HEIGHT X WIDTH X DEPTH	mm	540 X 700 X 250	540 X 700 X 250	651 X 855 X 328	651 X 855 X 328
	PACKING DIMENSION	HEIGHT X WIDTH X DEPTH	mm	620 X 810 X 330	620 X 810 X 330	710 X 990 X 415	710 X 990 X 415
	UNIT WEIGHT (RN / RYN)		kg	28	30	47	47
	PIPE CONNECTION	TYPE		FLARE VALVE			
		SIZE	LIQUID	6.35	6.35	6.35	6.35
			GAS	9.52	12.70	12.70	12.70
	FAN	TYPE		PROPELLER			
		DRIVE		DIRECT			
	FAN MOTOR	TYPE		INDUCTION			
		INDEX OF PROTECTION (IP)		IP22	IP22	IP23	IP23
		INSULATION GRADE		CLASS B	CLASS B	CLASS F	CLASS F
		RATED INPUT POWER	W	57	70	80	80
		RATED RUNNING CURRENT	A	0.25	0.31	0.36	0.36
		MOTOR OUTPUT	W	24	35	42	42
		POLES		6	6	6	6
	COMPRESSOR	TYPE		ROTARY			
		OIL TYPE		RB68A or FREOL ALPHA68M		RB68A or FREOL ALPHA68M	
		OIL AMOUNT	cm^3	350	430	670	670
		RN	RATED INPUT POWER	W	788	1165	1551	1693
		RYN	RATED INPUT POWER (COOLING)	W	788	1165	1551	1693
			RATED INPUT POWER (HEATING)	W	718	881	1571	1643
			RATED RUNNING CURRENT	A	3.51	5.3	7.11	7.49
			RATED RUNNING CURRENT (COOLING)	A	3.51	5.3	7.11	7.49
			RATED RUNNING CURRENT (HEATING)	A	3.21	3.98	7.14	7.29
		LOCKED ROTOR AMP.		A	19	24	26	26
	COIL	TUBE	MATERIAL	SEAMLESS INNER GROOVE COPPER			
			DIAMETER (RN/RYN)	mm	7	7 / 9.52	7	7
		FIN	MATERIAL	ALUMINIUM (RAISE LANCE)			
			FACE AREA	m^2	0.36		0.51	
			ROW		1	1	2	2
	CASING		COLOUR	LIGHT GREY			

ALL UNITS ARE BEING TESTED AND COMPLY TO ISO 5151 (NON-DUCTED UNIT) OR ISO 13253 (DUCTED UNIT).

COOLING	HEATING
INDOOR: 27°C DB/ 19°C WB	INDOOR: 20°C DB
OUTDOOR: 35°C DB/ 24°C WB	OUTDOOR: 7°C DB/ 6°C WB

DAIKIN_FFRN.indb 21 12/27/2012 9:28:09 AM

Engineering Data - R410A MODEL

MODEL	INDOOR UNIT			FCRN50EXV1	FCRN60EXV1	FCRN71EXV1	FCRN100EXV1
	OUTDOOR UNIT			RN50CXV1	RN60CXV1	RR71CXV1	RR90DXV1
NOMINAL COOLING CAPACITY			Btu/h	18300	22200	27000	29200
			W	5363	6506	7913	8558
NOMINAL TOTAL INPUT POWER (COOLING)			W	1740	1940	2790	2820
NOMINAL RUNNING CURRENT (COOLING)			A	7.72	8.67	13.10	13.70
EER			W/W	3.08	3.36	2.84	3.03
REFRIGERANT CONTROL (EXPANSION DEVICE)				OUTDOOR CAPILLARY TUBE			
REFRIGERANT CHARGE			kg	1.38	1.54	2.03	2.60
MODEL	INDOOR UNIT			FCQN50EXV1	FCQN60EXV1	FCQN71EXV1	FCQN100EXV1
	OUTDOOR UNIT			RYN50CXV1	RYN60CXV1	RQ71CXV1	RQ90DXV1
NOMINAL COOLING CAPACITY			Btu/h	18300	22200	27000	29200
			W	5363	6506	7913	8558
NOMINAL HEATING CAPACITY			Btu/h	17700	20500	28000	31800
			W	5188	6008	8206	9320
NOMINAL TOTAL INPUT POWER (COOLING)			W	1740	1940	2790	2820
NOMINAL TOTAL INPUT POWER (HEATING)			W	1490	1760	2325	2545
NOMINAL RUNNING CURRENT (COOLING)			A	7.72	8.67	13.08	13.7
NOMINAL RUNNING CURRENT (HEATING)			A	6.61	7.86	11.20	12.80
EER			W/W	3.08	3.36	2.84	3.03
COP			W/W	3.48	3.41	3.53	3.66
REFRIGERANT CONTROL (EXPANSION DEVICE)				OUTDOOR CAPILLARY TUBE			
REFRIGERANT CHARGE			kg	1.38	1.54	2.03	2.60
POWER SOURCE			V/Ph/Hz	220 - 240 /1/50			
REFRIGERANT TYPE				R410A			
INDOOR UNIT	CONTROL	AIR DISCHARGE		4 WAY AUTOMATIC LOUVER (UP & DOWN)			
		OPERATION		WIRELESS MICROCOMPUTER REMOTE CONTROL			
	AIR FLOW	HIGH	l/s / CFM	280 / 600	320 / 680	410 / 860	490 / 1030
		MEDIUM	l/s / CFM	250 / 530	280 / 600	340 / 725	410 / 860
		LOW	l/s / CFM	200 / 430	250 / 530	290 / 620	350 / 740
		SUPER LOW	l/s / CFM	190 / 400	200 / 430	250 / 530	295 / 620
	SOUND PRESSURE LEVEL (H/M/L/SL)		dBA	34 / 32 / 30 / 28	37 / 34 / 33 / 32	42 / 38 / 35 / 33	47 / 44 / 40 / 36
	UNIT DIMENSION [Panel]	HEIGHT X WIDTH X DEPTH	mm	265 X 820 X 820 [340 X 990 X 990]			300 X 820 X 820 [375 X 990 X 990]
	PACKING DIMENSION	HEIGHT X WIDTH X DEPTH	mm	300 X 916 X 916			335 X 916 X 916
	UNIT WEIGHT (UNIT + PANEL)		kg	29 + 6			42 + 6
	CONDENSATE DRAIN SIZE		mm	19.05			
	FAN	TYPE		BLOWER WHEEL			
		DRIVE		DIRECT			
	FAN MOTOR	TYPE		INDUCTION			
		INDEX OF PROTECTION (IP)		IP20			
		INSULATION GRADE		CLASS B			
		RATED INPUT POWER	W	88	101	145	176
		RATED RUNNING CURRENT	A	0.39	0.44	0.64	0.79
		MOTOR MAX OUTPUT	W	20	30	50	60
		POLES		6			
	COIL	TUBE	MATERIAL	SEAMLESS INNER GROOVE COPPER			
			DIAMETER	7			
		FIN	MATERIAL	ALUMINIUM (SLIT FIN)			
			FACE AREA	0.386		0.372	0.461
			ROW	2		3	
	AIR QUALITY	FILTER	TYPE	WASHABLE SARANET FILTER			
			QUANTITY	1			
	CASING		COLOUR	WITHOUT PAINT			
	AIR FLOW		l/s / CFM	614 / 1300	689 / 1460	684 / 1450	1605 / 3400
OUTDOOR UNIT	SOUND PRESSURE LEVEL		dBA	52	52	58	58
	UNIT DIMENSION	HEIGHT X WIDTH X DEPTH	mm	651 X 855 X 328	753 X 855 X 328		852 X 1030 X 400
	PACKING DIMENSION	HEIGHT X WIDTH X DEPTH	mm	710 X 990 X 415	810 X 990 X 415		1010 X 1180 X 514
	UNIT WEIGHT (RN / RYN)		kg	47	50	57	86
	PIPE CONNECTION	TYPE		FLARE VALVE			
		SIZE	LIQUID	6.35		9.52	
			GAS	12.70	15.88	15.88	15.88
	FAN	TYPE		PROPELLER			
		DRIVE		DIRECT			
	FAN MOTOR	TYPE		INDUCTION			
		INDEX OF PROTECTION (IP)		IP23	IP23		N / A
		INSULATION GRADE		CLASS F	CLASS F	CLASS F	CLASS B
		RATED INPUT POWER	W	80	97	124	257
		RATED RUNNING CURRENT	A	0.36	0.43	0.54	1.10
		MOTOR OUTPUT	W	42	64	75	145
		POLES		6			8
	COMPRESSOR	TYPE		ROTARY		ROTARY	SCROLL
		OIL TYPE		RB68A or Freol Alpha68M		RB68A or Freol Alpha68M	MOBIL EAL ARCTIC 22C
		OIL AMOUNT	cm³	670	1130	1242	
		RN	RATED INPUT POWER	1572	1742	2521	2387
		RYN	RATED INPUT POWER (COOLING)	1572	1742	2521	2387
			RATED INPUT POWER (HEATING)	1322	1562	2056	2112
			RATED RUNNING CURRENT	6.97	7.8	11.9	11.8
			RATED RUNNING CURRENT (COOLING)	6.97	7.8	11.9	11.8
			RATED RUNNING CURRENT (HEATING)	5.86	6.99	10.00	10.90
		LOCKED ROTOR AMP.	A	26	63	65	97
	COIL	TUBE	MATERIAL	SEAMLESS INNER GROOVE COPPER			
			DIAMETER (RN/RYN)	7			
		FIN	MATERIAL	ALUMINIUM(RAISE LANCE)		ALUMINIUM (CORR. FIN)	
			FACE AREA	0.51	0.62	0.62	0.87
			ROW	2			
	CASING		COLOUR	LIGHT GREY			

ALL UNITS ARE BEING TESTED AND COMPLY TO ISO 5151 (NON-DUCTED UNIT) OR ISO 13253 (DUCTED UNIT).

COOLING	HEATING
INDOOR: 27°C DB/ 19°C WB	INDOOR: 20°C DB
OUTDOOR: 35°C DB/ 24°C WB	OUTDOOR: 7°C DB/ 6°C WB

DAIKIN_FFRN.indb 22 12/27/2012 9:28:10 AM

Engineering Data - R410A MODEL

MODEL	INDOOR UNIT			FCRN100EXV1		FCRN125EXV1	
	OUTDOOR UNIT			RR90DXY1	RR100DXV1	RR125DXY1	
NOMINAL COOLING CAPACITY			Btu/h	31000	39000	45000	
			W	9086	11430	13190	
NOMINAL TOTAL INPUT POWER (COOLING)			W	2770	3920	4390	
NOMINAL RUNNING CURRENT (COOLING)			A	5.20	17.90	7.80	
EER			W/W	3.28	2.92	2.87	
REFRIGERANT CONTROL (EXPANSION DEVICE)				OUTDOOR CAPILLARY TUBE			
REFRIGERANT CHARGE			kg	2.60	2.10	2.25	
MODEL	INDOOR UNIT			FCQN100EXV1		FCQN125EXV1	
	OUTDOOR UNIT			RQ90DXY1	RQ100DXV1	RQ125DXY1	
NOMINAL COOLING CAPACITY			Btu/h	31000	39000	45000	
			W	9086	11430	13190	
NOMINAL HEATING CAPACITY			Btu/h	33400	39000	48000	
			W	9789	11430	14070	
NOMINAL TOTAL INPUT POWER (COOLING)			W	2770	3920	4390	
NOMINAL TOTAL INPUT POWER (HEATING)			W	2550	3740	4010	
NOMINAL RUNNING CURRENT (COOLING)			A	5.2	17.9	7.8	
NOMINAL RUNNING CURRENT (HEATING)			A	5.00	17.30	7.30	
EER			W/W	3.28	2.92	2.87	
COP			W/W	3.84	3.06	3.46	
REFRIGERANT CONTROL (EXPANSION DEVICE)				OUTDOOR CAPILLARY TUBE			
REFRIGERANT CHARGE			kg	2.60	2.10	2.25	
POWER SOURCE			V/Ph/Hz	220 - 240 /1/50	220 - 240 /1/50	380 - 415 / 3 / 50	
REFRIGERANT TYPE				R410A			
INDOOR UNIT	CONTROL	AIR DISCHARGE		4 WAY AUTOMATIC LOUVER (UP & DOWN)			
		OPERATION		WIRELESS MICROCOMPUTER REMOTE CONTROL			
	AIR FLOW	HIGH	I/s / CFM	490 / 1030		570 / 1200	
		MEDIUM	I/s / CFM	410 / 860		490 / 1030	
		LOW	I/s / CFM	350 / 740		440 / 930	
		SUPER LOW	I/s / CFM	295 / 620		370 / 780	
	SOUND PRESSURE LEVEL (H/M/L/SL)		dBA	47 / 44 / 40 / 36		49 / 45 / 43 / 39	
	UNIT DIMENSION [Panel]	HEIGHT X WIDTH X DEPTH	mm	300 X 820 X 820 [375 X 990 X 990]			
	PACKING DIMENSION	HEIGHT X WIDTH X DEPTH	mm	335 X 916 X 916			
	UNIT WEIGHT (UNIT + PANEL)		kg	42 + 6			
	CONDENSATE DRAIN SIZE		mm	19.05			
	FAN	TYPE		BLOWER WHEEL			
		DRIVE		DIRECT			
	FAN MOTOR	TYPE		INDUCTION			
		INDEX OF PROTECTION (IP)		IP20			
		INSULATION GRADE		CLASS B			
		RATED INPUT POWER	W	176	176	221	
		RATED RUNNING CURRENT	A	0.79	0.79	0.97	
		MOTOR MAX OUTPUT	W	60		100	
		POLES		6			
	COIL	TUBE	MATERIAL	SEAMLESS INNER GROOVE COPPER			
			DIAMETER	mm	7		
		FIN	MATERIAL	ALUMINIUM (SLIT FIN)			
			FACE AREA	m^2	0.461		0.464
			ROW		3		
	AIR QUALITY	FILTER	TYPE		WASHABLE SARANET FILTER		
			QUANTITY	pc	1		
	CASING			COLOUR	WITHOUT PAINT		
	AIR FLOW			I/s / CFM	1605 / 3400		2171 / 4600
OUTDOOR UNIT	SOUND PRESSURE LEVEL			dBA	58		60
	UNIT DIMENSION	HEIGHT X WIDTH X DEPTH		mm	852 X 1030 X 400		
	PACKING DIMENSION	HEIGHT X WIDTH X DEPTH		mm	1010 x 1180 x 514		
	UNIT WEIGHT (RN / RYN)			kg	86	95	98
	PIPE CONNECTION	TYPE			FLARE VALVE		
		SIZE	LIQUID	mm	9.52		
			GAS	mm	15.88		
	FAN	TYPE			PROPELLER		
		DRIVE			DIRECT		
	FAN MOTOR	TYPE			INDUCTION		
		INDEX OF PROTECTION (IP)			N / A	N / A	IP20
		INSULATION GRADE			CLASS B	CLASS B	CLASS F
		RATED INPUT POWER		W	257	257	276
		RATED RUNNING CURRENT		A	1.1	1.1	1.34
		MOTOR OUTPUT		W	145		
		POLES			8		
	COMPRESSOR	TYPE			SCROLL		
		OIL TYPE			MOBIL EAL ARCTIC 22C		
		OIL AMOUNT		cm^3	1242	1951	1656
		RN	RATED INPUT POWER	W	2337	3487	3893
		RYN	RATED INPUT POWER (COOLING)	W	2337	3487	3893
			RATED INPUT POWER (HEATING)	W	2117	3307	3513
			RATED RUNNING CURRENT	A	4.57	16	7.03
			RATED RUNNING CURRENT (COOLING)	A	4.57	16	7.03
			RATED RUNNING CURRENT (HEATING)	A	4.37	15.40	6.53
		LOCKED ROTOR AMP.		A	48	136	74
	COIL	TUBE	MATERIAL		SEAMLESS INNER GROOVE COPPER		
			DIAMETER (RN/RYN)	mm	7	7	7
		FIN	MATERIAL		ALUMINIUM (CORR.FIN)		
			FACE AREA	m^2	0.87		
			ROW		2		
	CASING			COLOUR	LIGHT GREY		

ALL UNITS ARE BEING TESTED AND COMPLY TO ISO 5151 (NON-DUCTED UNIT) OR ISO 13253 (DUCTED UNIT).

COOLING	HEATING
INDOOR: 27°C DB/ 19°C WB	INDOOR: 20°C DB
OUTDOOR: 35°C DB/ 24°C WB	OUTDOOR: 7°C DB/ 6°C WB

DAIKIN_FFRN.indb 23 12/27/2012 9:28:10 AM

Safety Device

MODEL	INDOOR			FFRN25/35CXV1 FFQN25/35CXV1	FFRN50CXV1 FFQN50CXV1
	OUTDOOR			R(Y)N25CXV1	R(Y)N50CXV1
SAFETY DEVICE	HIGH PRESSURE SWITCH	TYPE		N/A	
		OPEN	kPa / psi	N/A	
		CLOSE	kPa / psi	N/A	
	LOW PRESSURE SWITCH	TYPE		N/A	
		OPEN	kPa / psi	N/A	
		CLOSE	kPa / psi	N/A	
	PHASE SEQUENCER			N/A	
	DISC. THERMOSTAT SETTING		°C / F	N/A	

MODEL	INDOOR			FCRN50/60/71EXV1 FCQN50/60/71EXV1
	OUTDOOR			R(Y)N50/60CXV1 R(R)(Q)71CXV1
SAFETY DEVICE	HIGH PRESSURE SWITCH	TYPE		N/A
		OPEN	kPa / psi	N/A
		CLOSE	kPa / psi	N/A
	LOW PRESSURE SWITCH	TYPE		N/A
		OPEN	kPa / psi	N/A
		CLOSE	kPa / psi	N/A
	PHASE SEQUENCER			N/A
	DISC. THERMOSTAT SETTING		°C / F	N/A

MODEL	INDOOR			FCRN100EXV1		
	OUTDOOR			RR90DXV1	RR100DXV1	RR100DXY1
SAFETY DEVICE	HIGH PRESSURE SWITCH	TYPE		NC		
		OPEN	kPa / psi	4140 / 600.46		
		CLOSE	kPa / psi	3310 / 480.07		
	LOW PRESSURE SWITCH	TYPE		NC		
		OPEN	kPa / psi	48 / 6.96		
		CLOSE	kPa / psi	152 / 22.05		
	PHASE SEQUENCER			N/A		YES
	DISC. THERMOSTAT SETTING		°C / F	N/A		130 / 266

MODEL	INDOOR			FCRN125EXV1
	OUTDOOR			RR125DXY1
SAFETY DEVICE	HIGH PRESSURE SWITCH	TYPE		NC
		OPEN	kPa / psi	4140 / 600.46
		CLOSE	kPa / psi	3310 / 480.07
	LOW PRESSURE SWITCH	TYPE		NC
		OPEN	kPa / psi	48 / 6.96
		CLOSE	kPa / psi	152 / 22.05
	PHASE SEQUENCER			YES
	DISC. THERMOSTAT SETTING		°C / F	130 / 266

ALL SPECIFICATIONS ARE SUBJECTED TO CHANGE BY THE MANUFACTURER WITHOUT PRIOR NOTICE.

DAIKIN_FFRN.indb 24 12/27/2012 9:28:10 AM

MODEL	INDOOR			FCQN100EXV1		
	OUTDOOR			RQ90DXV1	RQ100DXV1	RQ100DXY1
SAFETY DEVICE	HIGH PRESSURE SWITCH	TYPE		NC		
		OPEN	kPa / psi	4140 / 600.46		
		CLOSE	kPa / psi	3310 / 480.07		
	LOW PRESSURE SWITCH	TYPE		NC		
		OPEN	kPa / psi	48 / 6.96		
		CLOSE	kPa / psi	152 / 22.05		
	PHASE SEQUENCER			N/A		YES
	DISC. THERMOSTAT SETTING		°C / F	N/A		130 / 266

MODEL	INDOOR			FCQN125EXV1
	OUTDOOR			RQ125DXY1
SAFETY DEVICE	HIGH PRESSURE SWITCH	TYPE		NC
		OPEN	kPa / psi	4140 / 600.46
		CLOSE	kPa / psi	3310 / 480.07
	LOW PRESSURE SWITCH	TYPE		NC
		OPEN	kPa / psi	48 / 6.96
		CLOSE	kPa / psi	152 / 22.05
	PHASE SEQUENCER			YES
	DISC. THERMOSTAT SETTING		°C / F	130 / 266

ALL SPECIFICATIONS ARE SUBJECTED TO CHANGE BY THE MANUFACTURER WITHOUT PRIOR NOTICE.

DAIKIN_FFRN.indb 25 12/27/2012 9:28:10 AM

Performance Data

Calculation Steps

Interpolation method can be used to get the total cooling capacity, **TC** and sensible cooling capacity, **SC** and power input, **PI** at those temperatures which are not stated out in the table. Extrapolation method is not allowed to be used.

Example:

Model: FFRN25CXV1 - RN25CXV1
Indoor Condition: 25°C DB, 17°C WB
Outdoor Condition: 37°C DB
Fan Speed: High

Solution:
Based on the Performance Table,

1. Refer to the Indoor DB column,
   - **25°C** is located between 24°C & 27°C for 16°C WB.
   - **25°C** is located between 24°C & 27°C for 19°C WB.
   - Thus, Interpolation needs to be applied.
2. Refer to the Indoor WB column,
   - **17°C** is located between 16°C & 19°C for 25°C DB.
   - Thus, Interpolation needs to be applied.
3. Refer to the Outdoor DB column,
   - **37°C** is located between 35°C & 40°C.
   - Thus, Interpolation needs to be applied.

1st Step
Interpolation of Indoor WB
Find TC, SC & PI
(a) Indoor: **25°C DB**, 16°C WB
Outdoor: 35°C DB
(b) Indoor: **25°C DB**, 19°C WB
Outdoor: 35°C DB
(c) Indoor: **25°C DB**, 16°C WB
Outdoor: 40°C DB
(d) Indoor: **25°C DB**, 19°C WB
Outdoor: 40°C DB

⇨

2nd Step
Interpolation of Indoor DB
Find TC, SC & PI
(a) Indoor: 25°C DB, **17°C WB**
Outdoor: 35°C DB
(b) Indoor: 25°C DB, **17°C WB**
Outdoor: 40°C DB

⇨

3rd Step
Interpolation of Outdoor DB
Find TC, SC & PI
(a) Indoor: 25°C DB, 17°C WB
Outdoor: **37°C DB**

Details of Calculation:

1st Step:

To obtain the TC, SC & PI for

(a) Indoor Condition: 25°C DB, 16°C WB
Outdoor Condition: 35°C DB

EWB	EDB	Outdoor temperature				
			35°C			
			TC	SC	PI	
			⋮	⋮	⋮	
16	24		3.20	3.20	1.27	
	25	- - - - - -	x_1	y_1	z_1	
	27		3.30	3.30	1.27	

By Interpolation Method

$$\Rightarrow \frac{25°C - 24°C}{27°C - 24°C} = \frac{x_1 - 3.20kW}{3.30kW - 3.20kW}$$

$\Rightarrow x_1 = 3.23kW$

Similarly,

$y_1 = 3.23kW$

$z_1 = 1.27kW$

DAIKIN_FFRN.indb 26 12/27/2012 9:28:10 AM

(b) Indoor Condition: 25°C DB, 16°C WB
Outdoor Condition: 35°C DB

EWB	EDB	Outdoor temperature				
			35°C			
			TC	SC	PI	
			⋮	⋮	⋮	
19	24		3.51	2.57	1.29	
	25		x_2	y_2	z_2	
	27		3.52	2.99	1.29	

By Interpolation Method

$$\Rightarrow \frac{25°C - 24°C}{27°C - 24°C} = \frac{x_2 - 3.51kW}{3.52kW - 3.51kW}$$

$\Rightarrow x_2 = 3.51kW$

Similarly,

$y_2 = 2.71kW$

$z_2 = 1.29kW$

Repeat the same process for (c) & (d) in 1st Step

(c) $x_3 = 2.98$ kW; $y_3 = 2.98$ kW; $z_3 = 1.38$ kW

(d) $x_4 = 3.22$ W; $y_4 = 2.53$ kW; $z_4 = 1.40$ kW

2nd Step:

To obtain the TC, SC & PI for

(a) Indoor Condition: 25°C DB, 17°C WB
Outdoor Condition: 35°C DB

EWB	EDB	Outdoor temperature				
			35°C			
			TC	SC	PI	
			⋮	⋮	⋮	
16	25		3.23	3.23	1.27	
17			x_5	y_5	z_5	
19			3.51	2.71	1.29	

By Interpolation Method

$$\Rightarrow \frac{17°C - 16°C}{19°C - 16°C} = \frac{x_5 - 3.23kW}{3.51kW - 3.23kW}$$

$\Rightarrow x_5 = 3.32kW$

Similarly,

$y_5 = 3.06kW$

$z_5 = 1.28kW$

Repeat the same process for (b) in 2nd Step

(c) $x_6 = 3.06$ kW; $y_6 = 2.83$ kW; $z_6 = 1.39$ kW

3rd Step:

To obtain the TC, SC & PI for

(a) Indoor Condition: 25°C DB, 17°C WB
Outdoor Condition: 37°C DB

EWB	EDB	Outdoor temperature									
			35°C			37°C			40°C		
			TC	SC	PI	TC	SC	PI	TC	SC	PI
						⋮	⋮	⋮			
25	17		3.32	3.06	1.28	x	y	z	3.06	2.83	1.39

By Interpolation Method

$$\Rightarrow \frac{37°C - 35°C}{40°C - 35°C} = \frac{x - 3.32kW}{3.06kW - 3.32kW}$$

$\Rightarrow x = 3.22kW$

Similarly,

$y = 2.97kW$

$z = 1.35kW$

DAIKIN_FFRN.indb 27 12/27/2012 9:28:10 AM

Performance Tables

R410A Cooling Only

Model: FFRN25CXV1 - RN25CXV1
Cooling Mode

AFR (CFM)	EWB	EDB	Outdoor temperature																	
			19°C			25°C			30°C			35°C			40°C			46°C		
			TC	SC	PI	TC	SC	PI	TC	SC	PI	TC	SC	PI	TC	SC	PI	TC	SC	PI
330	16°C	21°C	2.62	2.08	0.68	2.53	2.03	0.74	2.43	1.97	0.80	2.34	1.92	0.87	2.15	1.78	0.94	1.98	1.68	1.04
		24°C	2.63	2.49	0.68	2.53	2.44	0.74	2.44	2.38	0.80	2.34	2.32	0.87	2.15	2.15	0.94	1.99	1.99	1.04
		27°C	2.65	2.65	0.69	2.56	2.56	0.74	2.47	2.47	0.80	2.37	2.37	0.87	2.19	2.19	0.95	2.04	2.04	1.04
		30°C	2.73	2.73	0.69	2.65	2.65	0.75	2.57	2.57	0.81	2.49	2.49	0.88	2.30	2.30	0.95	2.16	2.16	1.05
	19°C	24°C	2.89	1.94	0.69	2.79	1.89	0.75	2.69	1.84	0.81	2.58	1.79	0.88	2.37	1.67	0.96	2.19	1.57	1.06
		27°C	2.89	2.22	0.69	2.79	2.17	0.75	2.69	2.12	0.81	2.58	2.07	0.88	2.37	1.94	0.96	2.20	1.84	1.06
		30°C	2.90	2.74	0.69	2.80	2.69	0.75	2.70	2.63	0.82	2.60	2.56	0.88	2.39	2.39	0.96	2.22	2.22	1.06
		33°C	2.93	2.93	0.70	2.84	2.84	0.75	2.75	2.75	0.82	2.65	2.65	0.89	2.45	2.45	0.96	2.29	2.29	1.07
	22°C	27°C	3.18	1.90	0.71	3.07	1.86	0.77	2.96	1.81	0.83	2.84	1.76	0.90	2.61	1.64	0.98	2.42	1.55	1.08
		30°C	3.18	2.32	0.71	3.07	2.27	0.77	2.96	2.22	0.83	2.84	2.16	0.90	2.62	2.03	0.98	2.42	1.92	1.08
		33°C	3.18	2.71	0.71	3.07	2.66	0.77	2.96	2.60	0.83	2.85	2.55	0.90	2.62	2.39	0.98	2.43	2.27	1.08
		36°C	3.19	3.07	0.71	3.09	3.01	0.77	2.98	2.95	0.83	2.87	2.87	0.90	2.65	2.65	0.98	2.46	2.46	1.08
360	16°C	21°C	2.73	2.17	0.69	2.63	2.11	0.75	2.53	2.06	0.81	2.43	2.00	0.88	2.23	1.86	0.95	2.05	1.75	1.05
		24°C	2.74	2.63	0.69	2.64	2.57	0.75	2.54	2.51	0.81	2.44	2.44	0.88	2.24	2.24	0.95	2.07	2.07	1.05
		27°C	2.77	2.77	0.69	2.68	2.68	0.75	2.58	2.58	0.81	2.49	2.49	0.88	2.30	2.30	0.96	2.14	2.14	1.05
		30°C	2.88	2.88	0.70	2.80	2.80	0.75	2.72	2.72	0.82	2.63	2.63	0.89	2.43	2.43	0.97	2.27	2.27	1.07
	19°C	24°C	3.00	2.05	0.70	2.90	2.00	0.76	2.79	1.95	0.82	2.68	1.90	0.89	2.46	1.77	0.97	2.27	1.67	1.07
		27°C	3.01	2.37	0.70	2.90	2.31	0.76	2.79	2.26	0.82	2.68	2.21	0.89	2.46	2.06	0.97	2.28	1.95	1.07
		30°C	3.02	2.92	0.70	2.92	2.85	0.76	2.81	2.79	0.82	2.71	2.71	0.89	2.49	2.49	0.97	2.31	2.31	1.07
		33°C	3.07	3.07	0.70	2.98	2.98	0.76	2.89	2.89	0.83	2.79	2.79	0.90	2.58	2.58	0.98	2.42	2.42	1.08
	22°C	27°C	3.30	2.01	0.71	3.19	1.96	0.77	3.07	1.91	0.84	2.94	1.86	0.91	2.71	1.74	0.99	2.50	1.64	1.09
		30°C	3.31	2.47	0.71	3.19	2.42	0.77	3.07	2.36	0.84	2.95	2.31	0.91	2.71	2.16	0.99	2.51	2.05	1.09
		33°C	3.31	2.89	0.71	3.20	2.84	0.77	3.08	2.78	0.84	2.96	2.72	0.91	2.72	2.55	0.99	2.52	2.42	1.09
		36°C	3.33	3.27	0.72	3.22	3.21	0.78	3.11	3.11	0.84	3.00	3.00	0.91	2.77	2.77	0.99	2.58	2.58	1.09
410	16°C	21°C	2.83	2.27	0.70	2.72	2.21	0.75	2.62	2.15	0.81	2.51	2.09	0.88	2.30	1.95	0.96	2.12	1.83	1.06
		24°C	2.84	2.75	0.70	2.74	2.69	0.75	2.64	2.62	0.82	2.53	2.53	0.88	2.32	2.32	0.96	2.15	2.15	1.06
		27°C	2.89	2.89	0.70	2.79	2.79	0.76	2.70	2.70	0.82	2.60	2.60	0.89	2.41	2.41	0.97	2.24	2.24	1.07
		30°C	3.03	3.03	0.70	2.94	2.94	0.76	2.85	2.85	0.83	2.76	2.76	0.90	2.56	2.56	0.98	2.39	2.39	1.08
	19°C	24°C	3.11	2.17	0.71	3.00	2.12	0.77	2.89	2.06	0.83	2.77	2.01	0.90	2.54	1.87	0.98	2.35	1.77	1.07
		27°C	3.12	2.51	0.71	3.01	2.46	0.77	2.90	2.40	0.83	2.78	2.34	0.90	2.55	2.19	0.98	2.36	2.07	1.08
		30°C	3.15	3.09	0.71	3.04	3.03	0.77	2.93	2.93	0.83	2.82	2.82	0.90	2.59	2.59	0.98	2.41	2.41	1.08
		33°C	3.22	3.22	0.71	3.12	3.12	0.77	3.03	3.03	0.84	2.93	2.93	0.91	2.71	2.71	0.99	2.54	2.54	1.09
	22°C	27°C	3.42	2.13	0.72	3.29	2.08	0.78	3.17	2.03	0.85	3.04	1.97	0.92	2.80	1.84	0.99	2.58	1.74	1.10
		30°C	3.42	2.62	0.72	3.30	2.57	0.78	3.18	2.51	0.85	3.05	2.46	0.92	2.80	2.30	1.00	2.59	2.18	1.10
		33°C	3.43	3.07	0.72	3.32	3.02	0.78	3.19	2.95	0.85	3.07	2.89	0.92	2.82	2.71	1.00	2.62	2.57	1.10
		36°C	3.47	3.47	0.72	3.36	3.36	0.78	3.24	3.24	0.85	3.12	3.12	0.92	2.89	2.89	1.00	2.69	2.69	1.11

Remark:
AFR: Air flow rate (CFM)
EWB: Entering Wet Bulb Temp. (°C)
EDB: Entering Dry Bulb Temp. (°C)
TC: Total Cooling Capacity (kW)
SC: Sensible Cooling Capacity (kW)
PI: Power Input (kW)

Notes:
1. Ratings shown are net capacities.
2. shows nominal capacities.
3. Direct interpolation is permissible. Do not extrapolate.
4. Unit is able to operate at ambient from 19°C to 46°C DB without pressure trip.

DAIKIN_FFRN.indb 28 12/27/2012 9:28:10 AM

Model: FFRN35CXV1 - RN35CXV1
Cooling Mode

AFR (CFM)	EWB	EDB	Outdoor temperature																	
			19°C			25°C			30°C			35°C			40°C			46°C		
			TC	SC	PI	TC	SC	PI	TC	SC	PI	TC	SC	PI	TC	SC	PI	TC	SC	PI
330	16°C	21°C	3.45	2.73	0.99	3.33	2.66	1.07	3.21	2.59	1.16	3.08	2.51	1.25	2.83	2.34	1.36	2.61	2.20	1.50
		24°C	3.46	3.27	0.99	3.33	3.20	1.07	3.21	3.12	1.16	3.08	3.04	1.26	2.83	2.83	1.36	2.62	2.62	1.50
		27°C	3.48	3.48	0.99	3.37	3.37	1.07	3.25	3.25	1.16	3.13	3.13	1.26	2.88	2.88	1.37	2.68	2.68	1.51
		30°C	3.59	3.59	0.99	3.49	3.49	1.08	3.38	3.38	1.17	3.27	3.27	1.27	3.03	3.03	1.38	2.84	2.84	1.52
	19°C	24°C	3.81	2.55	1.00	3.67	2.49	1.09	3.54	2.42	1.18	3.40	2.35	1.28	3.12	2.19	1.38	2.89	2.06	1.53
		27°C	3.81	2.92	1.00	3.68	2.85	1.09	3.54	2.79	1.18	3.40	2.72	1.28	3.13	2.54	1.39	2.89	2.41	1.53
		30°C	3.82	3.60	1.00	3.68	3.52	1.09	3.55	3.45	1.18	3.42	3.36	1.28	3.15	3.14	1.39	2.92	2.92	1.53
		33°C	3.86	3.86	1.01	3.74	3.74	1.09	3.61	3.61	1.18	3.49	3.49	1.28	3.23	3.23	1.39	3.02	3.02	1.54
	22°C	27°C	4.19	2.50	1.02	4.04	2.44	1.11	3.90	2.37	1.20	3.74	2.31	1.30	3.44	2.15	1.41	3.19	2.03	1.56
		30°C	4.19	3.04	1.02	4.04	2.98	1.11	3.90	2.91	1.20	3.74	2.84	1.30	3.44	2.66	1.41	3.19	2.52	1.56
		33°C	4.19	3.55	1.02	4.05	3.49	1.11	3.90	3.42	1.20	3.75	3.35	1.30	3.45	3.14	1.41	3.20	2.98	1.56
		36°C	4.21	4.03	1.02	4.07	3.95	1.11	3.93	3.87	1.20	3.78	3.78	1.30	3.49	3.49	1.42	3.24	3.24	1.56
360	16°C	21°C	3.59	2.85	1.00	3.46	2.77	1.08	3.33	2.70	1.17	3.19	2.62	1.27	2.93	2.44	1.37	2.70	2.30	1.51
		24°C	3.60	3.46	1.00	3.47	3.38	1.08	3.34	3.30	1.17	3.21	3.21	1.27	2.95	2.95	1.37	2.72	2.72	1.51
		27°C	3.64	3.64	1.00	3.52	3.52	1.08	3.40	3.40	1.17	3.28	3.28	1.27	3.03	3.03	1.38	2.82	2.82	1.52
		30°C	3.80	3.80	1.01	3.69	3.69	1.09	3.57	3.57	1.18	3.46	3.46	1.28	3.20	3.20	1.39	3.00	3.00	1.54
	19°C	24°C	3.96	2.69	1.01	3.81	2.63	1.10	3.67	2.56	1.19	3.52	2.49	1.29	3.24	2.32	1.40	2.99	2.19	1.54
		27°C	3.96	3.10	1.01	3.82	3.03	1.10	3.68	2.97	1.19	3.53	2.90	1.29	3.24	2.71	1.40	3.00	2.56	1.54
		30°C	3.98	3.83	1.01	3.84	3.75	1.10	3.71	3.66	1.19	3.56	3.56	1.29	3.28	3.28	1.40	3.04	3.04	1.54
		33°C	4.05	4.05	1.02	3.92	3.92	1.10	3.80	3.80	1.20	3.67	3.67	1.30	3.40	3.40	1.41	3.18	3.18	1.56
	22°C	27°C	4.35	2.64	1.03	4.19	2.58	1.12	4.04	2.51	1.21	3.88	2.44	1.31	3.56	2.28	1.42	3.30	2.15	1.57
		30°C	4.35	3.24	1.03	4.20	3.17	1.12	4.04	3.10	1.21	3.88	3.03	1.31	3.57	2.83	1.43	3.30	2.69	1.57
		33°C	4.36	3.79	1.03	4.21	3.72	1.12	4.05	3.64	1.21	3.89	3.57	1.32	3.58	3.35	1.43	3.32	3.18	1.57
		36°C	4.39	4.29	1.03	4.24	4.21	1.12	4.10	4.10	1.22	3.95	3.95	1.32	3.64	3.64	1.43	3.40	3.40	1.58
410	16°C	21°C	3.72	2.97	1.00	3.59	2.90	1.09	3.45	2.82	1.18	3.31	2.74	1.28	3.03	2.55	1.38	2.80	2.40	1.52
		24°C	3.74	3.61	1.01	3.61	3.53	1.09	3.47	3.44	1.18	3.33	3.33	1.28	3.06	3.06	1.39	2.83	2.83	1.53
		27°C	3.80	3.80	1.01	3.68	3.68	1.09	3.55	3.55	1.18	3.43	3.43	1.28	3.17	3.17	1.39	2.95	2.95	1.54
		30°C	3.99	3.99	1.02	3.88	3.88	1.10	3.76	3.76	1.20	3.63	3.63	1.30	3.36	3.36	1.41	3.14	3.14	1.56
	19°C	24°C	4.10	2.85	1.02	3.95	2.78	1.11	3.80	2.71	1.20	3.65	2.64	1.30	3.35	2.46	1.41	3.09	2.32	1.55
		27°C	4.11	3.30	1.02	3.96	3.22	1.11	3.81	3.15	1.20	3.66	3.07	1.30	3.36	2.87	1.41	3.11	2.72	1.55
		30°C	4.14	4.06	1.02	4.00	3.97	1.11	3.85	3.85	1.20	3.71	3.71	1.30	3.41	3.41	1.41	3.17	3.17	1.56
		33°C	4.23	4.23	1.03	4.11	4.11	1.12	3.98	3.98	1.21	3.85	3.85	1.31	3.57	3.57	1.43	3.34	3.34	1.58
	22°C	27°C	4.50	2.79	1.04	4.34	2.73	1.13	4.17	2.66	1.22	4.01	2.59	1.32	3.68	2.42	1.44	3.40	2.28	1.58
		30°C	4.51	3.44	1.04	4.35	3.37	1.13	4.18	3.30	1.22	4.01	3.22	1.33	3.69	3.02	1.44	3.41	2.86	1.58
		33°C	4.52	4.03	1.04	4.37	3.96	1.13	4.21	3.88	1.22	4.04	3.79	1.33	3.72	3.55	1.44	3.44	3.37	1.59
		36°C	4.56	4.55	1.04	4.42	4.42	1.13	4.27	4.27	1.23	4.11	4.11	1.33	3.80	3.80	1.45	3.55	3.55	1.60

Remark:
AFR: Air flow rate (CFM)
EWB: Entering Wet Bulb Temp. (°C)
EDB: Entering Dry Bulb Temp. (°C)
TC: Total Cooling Capacity (kW)
SC: Sensible Cooling Capacity (kW)
PI: Power Input (kW)

Notes:
1. Ratings shown are net capacities.
2. shows nominal capacities.
3. Direct interpolation is permissible. Do not extrapolate.
4. Unit is able to operate at ambient from 19°C to 46°C DB without pressure trip.

DAIKIN_FFRN.indb 29 12/27/2012 9:28:11 AM

Model: FFRN50CXV1 - RN50CXV1
Cooling Mode

AFR (CFM)	EWB	EDB	Outdoor temperature																	
			19°C			25°C			30°C			35°C			40°C			46°C		
			TC	SC	PI	TC	SC	PI	TC	SC	PI	TC	SC	PI	TC	SC	PI	TC	SC	PI
340	16°C	21°C	4.84	3.33	1.28	4.67	3.24	1.39	4.49	3.15	1.50	4.31	3.06	1.63	3.96	2.85	1.77	3.66	2.68	1.95
		24°C	4.84	3.98	1.28	4.67	3.89	1.39	4.50	3.80	1.50	4.32	3.71	1.63	3.97	3.46	1.77	3.67	3.27	1.95
		27°C	4.88	4.52	1.29	4.72	4.41	1.39	4.55	4.31	1.51	4.38	4.20	1.64	4.04	3.91	1.77	3.76	3.67	1.96
		30°C	5.03	5.03	1.29	4.89	4.89	1.40	4.74	4.74	1.52	4.59	4.59	1.65	4.25	4.25	1.79	3.98	3.98	1.98
	19°C	24°C	5.34	3.11	1.30	5.15	3.03	1.41	4.96	2.95	1.53	4.76	2.86	1.66	4.38	2.67	1.80	4.05	2.51	1.98
		27°C	5.34	3.55	1.30	5.15	3.47	1.41	4.96	3.39	1.53	4.77	3.31	1.66	4.38	3.10	1.80	4.05	2.93	1.98
		30°C	5.35	4.39	1.30	5.16	4.29	1.41	4.98	4.20	1.53	4.79	4.10	1.66	4.41	3.83	1.80	4.09	3.62	1.99
		33°C	5.41	5.41	1.31	5.23	5.23	1.42	5.06	5.06	1.54	4.89	4.89	1.67	4.53	4.53	1.81	4.23	4.23	2.00
	22°C	27°C	5.87	3.04	1.33	5.67	2.97	1.44	5.46	2.89	1.56	5.25	2.81	1.69	4.82	2.62	1.84	4.47	2.47	2.02
		30°C	5.87	3.70	1.33	5.67	3.63	1.44	5.46	3.54	1.56	5.25	3.46	1.69	4.83	3.24	1.84	4.47	3.07	2.02
		33°C	5.87	4.33	1.33	5.67	4.24	1.44	5.46	4.16	1.56	5.25	4.07	1.69	4.83	3.82	1.84	4.48	3.63	2.02
		36°C	5.89	4.91	1.33	5.70	4.81	1.44	5.50	4.71	1.56	5.30	4.60	1.70	4.89	4.32	1.84	4.55	4.10	2.03
410	16°C	21°C	5.03	3.47	1.30	4.85	3.38	1.40	4.67	3.29	1.52	4.48	3.20	1.65	4.11	2.98	1.78	3.79	2.80	1.97
		24°C	5.05	4.21	1.30	4.87	4.11	1.40	4.68	4.01	1.52	4.50	3.91	1.65	4.13	3.65	1.79	3.82	3.45	1.97
		27°C	5.11	4.78	1.30	4.94	4.67	1.41	4.77	4.55	1.52	4.60	4.42	1.65	4.24	4.10	1.79	3.95	3.84	1.98
		30°C	5.32	5.32	1.31	5.17	5.17	1.42	5.01	5.01	1.54	4.85	4.85	1.67	4.49	4.49	1.81	4.20	4.20	2.00
	19°C	24°C	5.54	3.28	1.32	5.35	3.20	1.43	5.15	3.12	1.54	4.94	3.03	1.67	4.54	2.82	1.82	4.19	2.66	2.00
		27°C	5.55	3.78	1.32	5.36	3.70	1.43	5.16	3.61	1.54	4.95	3.53	1.68	4.55	3.30	1.82	4.20	3.12	2.00
		30°C	5.58	4.66	1.32	5.39	4.56	1.43	5.19	4.46	1.55	5.00	4.35	1.68	4.60	4.07	1.82	4.27	3.84	2.01
		33°C	5.67	5.67	1.32	5.50	5.50	1.43	5.33	5.33	1.56	5.15	5.15	1.69	4.77	4.77	1.83	4.46	4.46	2.03
	22°C	27°C	6.09	3.21	1.34	5.88	3.14	1.45	5.66	3.06	1.57	5.43	2.98	1.71	4.99	2.78	1.85	4.62	2.62	2.04
		30°C	6.10	3.94	1.34	5.88	3.86	1.45	5.67	3.78	1.58	5.44	3.69	1.71	5.00	3.45	1.85	4.63	3.28	2.04
		33°C	6.11	4.62	1.34	5.90	4.53	1.45	5.68	4.44	1.58	5.46	4.35	1.71	5.02	4.08	1.85	4.65	3.87	2.04
		36°C	6.15	5.22	1.34	5.95	5.13	1.46	5.74	5.02	1.58	5.53	4.90	1.71	5.11	4.59	1.86	4.76	4.33	2.05
450	16°C	21°C	5.22	3.62	1.31	5.03	3.53	1.41	4.83	3.44	1.53	4.63	3.34	1.66	4.25	3.11	1.80	3.92	2.93	1.98
		24°C	5.25	4.40	1.31	5.06	4.29	1.41	4.87	4.19	1.53	4.67	4.08	1.66	4.29	3.81	1.80	3.96	3.59	1.99
		27°C	5.33	5.04	1.31	5.16	4.91	1.42	4.98	4.77	1.54	4.80	4.63	1.67	4.44	4.29	1.81	4.14	4.00	2.00
		30°C	5.60	5.60	1.32	5.43	5.43	1.43	5.27	5.27	1.55	5.09	5.09	1.69	4.72	4.72	1.83	4.40	4.40	2.02
	19°C	24°C	5.74	3.47	1.33	5.54	3.39	1.44	5.33	3.30	1.56	5.11	3.21	1.69	4.69	2.99	1.83	4.33	2.82	2.02
		27°C	5.76	4.02	1.33	5.55	3.93	1.44	5.35	3.83	1.56	5.13	3.74	1.69	4.71	3.50	1.83	4.35	3.31	2.02
		30°C	5.81	4.94	1.33	5.60	4.84	1.44	5.40	4.73	1.56	5.20	4.61	1.69	4.78	4.30	1.84	4.44	4.06	2.03
		33°C	5.93	5.93	1.34	5.76	5.76	1.45	5.58	5.58	1.57	5.40	5.40	1.71	5.00	5.00	1.86	4.68	4.68	2.05
	22°C	27°C	6.30	3.40	1.35	6.08	3.32	1.47	5.85	3.24	1.59	5.62	3.15	1.72	5.16	2.94	1.87	4.77	2.78	2.06
		30°C	6.32	4.19	1.35	6.09	4.11	1.47	5.86	4.02	1.59	5.63	3.93	1.72	5.17	3.68	1.87	4.78	3.49	2.06
		33°C	6.34	4.91	1.35	6.12	4.82	1.47	5.89	4.72	1.59	5.66	4.62	1.73	5.21	4.33	1.87	4.83	4.11	2.06
		36°C	6.39	5.54	1.36	6.19	5.44	1.47	5.98	5.32	1.60	5.77	5.19	1.73	5.33	4.84	1.88	4.97	4.56	2.08

Remark:
AFR: Air flow rate (CFM)
EWB: Entering Wet Bulb Temp. (°C)
EDB: Entering Dry Bulb Temp. (°C)
TC: Total Cooling Capacity (kW)
SC: Sensible Cooling Capacity (kW)
PI: Power Input (kW)

Notes:
1. Ratings shown are net capacities.
2. shows nominal capacities.
3. Direct interpolation is permissible. Do not extrapolate.
4. Unit is able to operate at ambient from 19°C to 46°C DB without pressure trip.

DAIKIN_FFRN.indb 30 12/27/2012 9:28:11 AM

Model: FFRN50CXV1 - RN50CXV1
Cooling Mode

AFR (CFM)	EWB	EDB	Outdoor temperature																	
			19°C			25°C			30°C			35°C			40°C			46°C		
			TC	SC	PI	TC	SC	PI	TC	SC	PI	TC	SC	PI	TC	SC	PI	TC	SC	PI
340	16°C	21°C	4.98	3.42	1.31	4.80	3.34	1.42	4.62	3.25	1.53	4.44	3.15	1.66	4.08	2.93	1.80	3.76	2.76	1.99
		24°C	4.99	4.10	1.31	4.81	4.01	1.42	4.63	3.91	1.53	4.44	3.82	1.66	4.08	3.56	1.81	3.78	3.36	1.99
		27°C	5.02	4.65	1.31	4.86	4.54	1.42	4.69	4.44	1.54	4.51	4.32	1.67	4.16	4.02	1.81	3.87	3.78	2.00
		30°C	5.18	5.18	1.32	5.03	5.03	1.43	4.88	4.88	1.55	4.72	4.72	1.68	4.38	4.38	1.83	4.09	4.09	2.02
	19°C	24°C	5.49	3.20	1.33	5.30	3.12	1.44	5.10	3.03	1.56	4.90	2.95	1.69	4.51	2.75	1.84	4.16	2.59	2.02
		27°C	5.49	3.66	1.33	5.30	3.58	1.44	5.11	3.49	1.56	4.91	3.41	1.69	4.51	3.19	1.84	4.17	3.02	2.02
		30°C	5.50	4.51	1.33	5.31	4.42	1.44	5.13	4.32	1.56	4.93	4.22	1.69	4.54	3.94	1.84	4.21	3.73	2.03
		33°C	5.57	5.57	1.33	5.39	5.39	1.45	5.21	5.21	1.57	5.03	5.03	1.70	4.66	4.66	1.85	4.36	4.36	2.04
	22°C	27°C	6.04	3.13	1.35	5.83	3.05	1.47	5.62	2.98	1.59	5.40	2.90	1.73	4.97	2.70	1.87	4.60	2.54	2.06
		30°C	6.04	3.81	1.35	5.83	3.73	1.47	5.62	3.65	1.59	5.40	3.56	1.73	4.97	3.33	1.87	4.60	3.16	2.06
		33°C	6.05	4.45	1.35	5.84	4.37	1.47	5.62	4.28	1.59	5.41	4.19	1.73	4.97	3.94	1.87	4.61	3.74	2.06
		36°C	6.07	5.05	1.36	5.87	4.95	1.47	5.66	4.85	1.59	5.46	4.74	1.73	5.03	4.44	1.88	4.68	4.22	2.07
410	16°C	21°C	5.18	3.57	1.32	4.99	3.48	1.43	4.80	3.39	1.55	4.61	3.29	1.68	4.23	3.07	1.82	3.90	2.88	2.01
		24°C	5.20	4.34	1.32	5.01	4.23	1.43	4.82	4.13	1.55	4.63	4.03	1.68	4.25	3.76	1.82	3.93	3.55	2.01
		27°C	5.26	4.92	1.33	5.08	4.81	1.43	4.91	4.69	1.55	4.73	4.55	1.69	4.37	4.22	1.83	4.07	3.95	2.02
		30°C	5.48	5.48	1.33	5.32	5.32	1.45	5.16	5.16	1.57	4.99	4.99	1.70	4.62	4.62	1.85	4.32	4.32	2.04
	19°C	24°C	5.71	3.38	1.34	5.50	3.29	1.45	5.30	3.21	1.58	5.08	3.12	1.71	4.67	2.91	1.85	4.31	2.74	2.04
		27°C	5.72	3.89	1.34	5.51	3.81	1.45	5.31	3.72	1.58	5.09	3.63	1.71	4.68	3.40	1.85	4.33	3.21	2.04
		30°C	5.74	4.80	1.35	5.54	4.70	1.46	5.35	4.59	1.58	5.14	4.48	1.71	4.73	4.19	1.86	4.39	3.96	2.05
		33°C	5.84	5.84	1.35	5.66	5.66	1.46	5.48	5.48	1.59	5.30	5.30	1.72	4.91	4.91	1.87	4.59	4.59	2.07
	22°C	27°C	6.27	3.31	1.37	6.05	3.23	1.48	5.82	3.15	1.61	5.59	3.06	1.74	5.14	2.86	1.89	4.75	2.70	2.08
		30°C	6.28	4.06	1.37	6.06	3.98	1.48	5.83	3.89	1.61	5.60	3.80	1.74	5.15	3.56	1.89	4.76	3.37	2.08
		33°C	6.29	4.76	1.37	6.07	4.67	1.48	5.85	4.57	1.61	5.62	4.47	1.74	5.17	4.20	1.89	4.79	3.98	2.08
		36°C	6.33	5.38	1.37	6.12	5.28	1.49	5.91	5.17	1.61	5.70	5.05	1.75	5.25	4.72	1.90	4.90	4.45	2.09
450	16°C	21°C	5.37	3.73	1.33	5.17	3.63	1.44	4.98	3.54	1.56	4.77	3.44	1.69	4.37	3.20	1.83	4.03	3.01	2.02
		24°C	5.40	4.53	1.33	5.20	4.42	1.44	5.01	4.31	1.56	4.81	4.20	1.69	4.41	3.92	1.84	4.08	3.70	2.03
		27°C	5.49	5.19	1.34	5.31	5.06	1.45	5.13	4.91	1.57	4.94	4.76	1.70	4.57	4.41	1.85	4.26	4.12	2.04
		30°C	5.76	5.76	1.35	5.59	5.59	1.46	5.42	5.42	1.59	5.24	5.24	1.72	4.85	4.85	1.87	4.53	4.53	2.06
	19°C	24°C	5.91	3.57	1.35	5.70	3.49	1.47	5.48	3.40	1.59	5.26	3.30	1.72	4.83	3.08	1.87	4.46	2.91	2.06
		27°C	5.93	4.14	1.36	5.72	4.04	1.47	5.50	3.95	1.59	5.28	3.85	1.72	4.85	3.60	1.87	4.48	3.41	2.06
		30°C	5.98	5.09	1.36	5.77	4.98	1.47	5.56	4.86	1.59	5.35	4.74	1.73	4.92	4.43	1.88	4.57	4.18	2.07
		33°C	6.11	6.11	1.36	5.93	5.93	1.48	5.75	5.75	1.60	5.56	5.56	1.74	5.15	5.15	1.89	4.81	4.81	2.09
	22°C	27°C	6.49	3.50	1.38	6.26	3.42	1.49	6.02	3.33	1.62	5.78	3.25	1.76	5.31	3.03	1.90	4.91	2.86	2.10
		30°C	6.50	4.31	1.38	6.27	4.23	1.50	6.03	4.14	1.62	5.79	4.04	1.76	5.32	3.79	1.91	4.92	3.59	2.10
		33°C	6.52	5.05	1.38	6.30	4.96	1.50	6.07	4.86	1.62	5.83	4.75	1.76	5.36	4.45	1.91	4.97	4.23	2.10
		36°C	6.58	5.70	1.39	6.38	5.60	1.50	6.16	5.48	1.63	5.93	5.34	1.77	5.48	4.98	1.92	5.11	4.69	2.12

Remark:
AFR: Air flow rate (CFM)
EWB: Entering Wet Bulb Temp. (°C)
EDB: Entering Dry Bulb Temp. (°C)
TC: Total Cooling Capacity (kW)
SC: Sensible Cooling Capacity (kW)
PI: Power Input (kW)

Notes:
1. Ratings shown are net capacities.
2. shows nominal capacities.
3. Direct interpolation is permissible. Do not extrapolate.
4. Unit is able to operate at ambient from 19°C to 46°C DB without pressure trip.

DAIKIN_FFRN.indb 31 12/27/2012 9:28:11 AM

Model: FCRN50EXV1 - RN50CXV1
Cooling Mode

AFR (CFM)	EWB	EDB	Outdoor temperature																	
			19°C			25°C			30°C			35°C			40°C			46°C		
			TC	SC	PI	TC	SC	PI	TC	SC	PI	TC	SC	PI	TC	SC	PI	TC	SC	PI
430	16°C	21°C	5.05	3.81	1.32	4.87	3.71	1.43	4.69	3.61	1.55	4.50	3.51	1.68	4.14	3.27	1.82	3.82	3.07	2.01
		24°C	5.06	4.57	1.32	4.88	4.46	1.43	4.70	4.36	1.55	4.51	4.25	1.68	4.14	3.97	1.82	3.83	3.74	2.01
		27°C	5.10	5.10	1.32	4.93	4.93	1.43	4.76	4.76	1.55	4.58	4.58	1.68	4.22	4.22	1.83	3.93	3.93	2.02
		30°C	5.26	5.26	1.33	5.11	5.11	1.44	4.95	4.95	1.56	4.79	4.79	1.70	4.44	4.44	1.84	4.16	4.16	2.04
	19°C	24°C	5.57	3.56	1.34	5.38	3.47	1.45	5.18	3.38	1.58	4.98	3.28	1.71	4.57	3.06	1.85	4.23	2.88	2.04
		27°C	5.58	4.07	1.34	5.38	3.98	1.45	5.18	3.89	1.58	4.98	3.80	1.71	4.58	3.55	1.85	4.23	3.36	2.04
		30°C	5.59	5.03	1.34	5.39	4.92	1.45	5.20	4.81	1.58	5.01	4.69	1.71	4.61	4.39	1.86	4.28	4.15	2.05
		33°C	5.65	5.65	1.35	5.47	5.47	1.46	5.29	5.29	1.58	5.11	5.11	1.72	4.73	4.73	1.86	4.42	4.42	2.06
	22°C	27°C	6.13	3.48	1.37	5.92	3.40	1.48	5.70	3.32	1.61	5.48	3.22	1.74	5.04	3.00	1.89	4.67	2.83	2.08
		30°C	6.13	4.25	1.37	5.92	4.16	1.48	5.70	4.06	1.61	5.48	3.97	1.74	5.04	3.71	1.89	4.67	3.52	2.08
		33°C	6.14	4.96	1.37	5.92	4.87	1.48	5.71	4.77	1.61	5.49	4.67	1.74	5.05	4.38	1.89	4.68	4.16	2.08
		36°C	6.16	5.62	1.37	5.95	5.51	1.48	5.75	5.40	1.61	5.54	5.28	1.75	5.11	4.95	1.89	4.75	4.69	2.09
530	16°C	21°C	5.26	3.98	1.33	5.07	3.88	1.44	4.88	3.77	1.56	4.68	3.67	1.69	4.29	3.41	1.84	3.96	3.21	2.03
		24°C	5.27	4.83	1.33	5.08	4.72	1.44	4.89	4.60	1.56	4.70	4.49	1.70	4.31	4.19	1.84	3.99	3.95	2.03
		27°C	5.34	5.34	1.34	5.16	5.16	1.45	4.98	4.98	1.57	4.80	4.80	1.70	4.43	4.43	1.85	4.13	4.13	2.04
		30°C	5.56	5.56	1.35	5.40	5.40	1.46	5.23	5.23	1.58	5.06	5.06	1.72	4.69	4.69	1.87	4.39	4.39	2.06
	19°C	24°C	5.79	3.76	1.36	5.59	3.67	1.47	5.38	3.57	1.59	5.16	3.47	1.72	4.74	3.24	1.87	4.38	3.05	2.06
		27°C	5.80	4.33	1.36	5.60	4.24	1.47	5.39	4.14	1.59	5.17	4.04	1.72	4.75	3.78	1.87	4.39	3.58	2.06
		30°C	5.83	5.35	1.36	5.63	5.23	1.47	5.43	5.11	1.59	5.22	4.99	1.73	4.81	4.67	1.87	4.46	4.41	2.07
		33°C	5.93	5.93	1.36	5.75	5.75	1.48	5.56	5.56	1.60	5.38	5.38	1.74	4.98	4.98	1.89	4.66	4.66	2.09
	22°C	27°C	6.37	3.68	1.38	6.14	3.60	1.50	5.91	3.51	1.62	5.68	3.41	1.76	5.22	3.18	1.91	4.83	3.00	2.10
		30°C	6.37	4.52	1.38	6.15	4.43	1.50	5.92	4.33	1.62	5.68	4.23	1.76	5.22	3.96	1.91	4.83	3.76	2.10
		33°C	6.38	5.30	1.38	6.16	5.20	1.50	5.94	5.09	1.62	5.70	4.98	1.76	5.25	4.67	1.91	4.86	4.44	2.10
		36°C	6.42	5.99	1.38	6.22	5.88	1.50	6.00	5.75	1.63	5.78	5.62	1.77	5.33	5.26	1.92	4.97	4.96	2.11
600	16°C	21°C	5.45	4.15	1.34	5.25	4.05	1.45	5.05	3.94	1.57	4.84	3.83	1.71	4.44	3.57	1.85	4.09	3.36	2.04
		24°C	5.48	5.04	1.35	5.28	4.92	1.46	5.08	4.80	1.58	4.88	4.68	1.71	4.48	4.36	1.85	4.14	4.12	2.04
		27°C	5.57	5.57	1.35	5.39	5.39	1.46	5.21	5.21	1.58	5.02	5.02	1.72	4.64	4.64	1.87	4.32	4.32	2.06
		30°C	5.85	5.85	1.36	5.68	5.68	1.48	5.50	5.50	1.60	5.32	5.32	1.74	4.93	4.93	1.89	4.60	4.60	2.08
	19°C	24°C	6.00	3.98	1.37	5.78	3.88	1.48	5.57	3.78	1.60	5.34	3.68	1.74	4.90	3.43	1.89	4.52	3.24	2.08
		27°C	6.02	4.61	1.37	5.80	4.50	1.48	5.59	4.40	1.60	5.36	4.29	1.74	4.92	4.01	1.89	4.55	3.79	2.08
		30°C	6.07	5.67	1.37	5.85	5.55	1.48	5.64	5.42	1.61	5.43	5.28	1.74	5.00	4.93	1.89	4.64	4.64	2.09
		33°C	6.20	6.20	1.38	6.02	6.02	1.49	5.83	5.83	1.62	5.64	5.64	1.76	5.23	5.23	1.91	4.89	4.89	2.11
	22°C	27°C	6.59	3.89	1.39	6.35	3.81	1.51	6.11	3.71	1.64	5.87	3.62	1.77	5.39	3.37	1.92	4.98	3.19	2.12
		30°C	6.60	4.80	1.39	6.36	4.71	1.51	6.13	4.61	1.64	5.88	4.50	1.77	5.40	4.22	1.92	5.00	4.00	2.12
		33°C	6.62	5.63	1.39	6.39	5.53	1.51	6.16	5.41	1.64	5.92	5.29	1.78	5.44	4.96	1.93	5.04	4.71	2.12
		36°C	6.68	6.35	1.40	6.47	6.24	1.52	6.25	6.10	1.64	6.02	5.95	1.78	5.57	5.55	1.94	5.19	5.19	2.14

Remark:
AFR: Air flow rate (CFM)
EWB: Entering Wet Bulb Temp. (°C)
EDB: Entering Dry Bulb Temp. (°C)
TC: Total Cooling Capacity (kW)
SC: Sensible Cooling Capacity (kW)
PI: Power Input (kW)

Notes:
1. Ratings shown are net capacities.
2. shows nominal capacities.
3. Direct interpolation is permissible. Do not extrapolate.
4. Unit is able to operate at ambient from 19°C to 46°C DB without pressure trip.

DAIKIN_FFRN.indb 32 12/27/2012 9:28:11 AM

Model: FCRN60EXV1 - RN60CXV1
Cooling Mode

AFR (CFM)	EWB	EDB	Outdoor temperature																	
			19°C			25°C			30°C			35°C			40°C			46°C		
			TC	SC	PI	TC	SC	PI	TC	SC	PI	TC	SC	PI	TC	SC	PI	TC	SC	PI
530	16°C	21°C	6.14	4.34	1.47	5.92	4.23	1.59	5.70	4.11	1.73	5.47	4.00	1.87	5.03	3.72	2.03	4.64	3.50	2.24
		24°C	6.15	5.20	1.47	5.93	5.08	1.59	5.71	4.96	1.73	5.48	4.84	1.87	5.04	4.52	2.03	4.66	4.26	2.24
		27°C	6.20	5.89	1.48	5.99	5.76	1.60	5.78	5.62	1.73	5.56	5.48	1.88	5.13	5.10	2.04	4.77	4.77	2.25
		30°C	6.39	6.39	1.48	6.20	6.20	1.61	6.01	6.01	1.74	5.82	5.82	1.89	5.40	5.40	2.06	5.05	5.05	2.27
	19°C	24°C	6.77	4.05	1.50	6.53	3.95	1.62	6.29	3.85	1.76	6.04	3.74	1.90	5.56	3.48	2.07	5.14	3.28	2.28
		27°C	6.78	4.64	1.50	6.54	4.53	1.62	6.30	4.43	1.76	6.05	4.32	1.91	5.56	4.04	2.07	5.14	3.83	2.28
		30°C	6.79	5.72	1.50	6.55	5.60	1.62	6.32	5.48	1.76	6.08	5.34	1.91	5.60	5.00	2.07	5.19	4.73	2.28
		33°C	6.87	6.87	1.50	6.64	6.64	1.63	6.43	6.43	1.76	6.21	6.21	1.91	5.74	5.74	2.08	5.37	5.37	2.30
	22°C	27°C	7.45	3.97	1.52	7.19	3.87	1.65	6.93	3.77	1.79	6.66	3.67	1.94	6.12	3.42	2.11	5.67	3.22	2.32
		30°C	7.45	4.83	1.52	7.19	4.73	1.65	6.93	4.62	1.79	6.66	4.51	1.94	6.12	4.23	2.11	5.67	4.01	2.32
		33°C	7.46	5.65	1.52	7.20	5.54	1.65	6.94	5.43	1.79	6.66	5.32	1.94	6.13	4.99	2.11	5.68	4.74	2.32
		36°C	7.48	6.40	1.53	7.23	6.27	1.65	6.98	6.14	1.79	6.73	6.01	1.95	6.20	5.63	2.11	5.77	5.34	2.33
600	16°C	21°C	6.39	4.53	1.49	6.16	4.41	1.61	5.92	4.29	1.74	5.68	4.17	1.89	5.21	3.88	2.05	4.81	3.66	2.26
		24°C	6.41	5.50	1.49	6.18	5.37	1.61	5.94	5.24	1.74	5.70	5.11	1.89	5.24	4.76	2.05	4.84	4.50	2.26
		27°C	6.48	6.24	1.49	6.27	6.10	1.61	6.05	5.94	1.75	5.83	5.76	1.90	5.38	5.35	2.06	5.02	5.01	2.27
		30°C	6.75	6.75	1.50	6.56	6.56	1.63	6.36	6.36	1.76	6.15	6.15	1.92	5.70	5.70	2.08	5.33	5.33	2.30
	19°C	24°C	7.04	4.28	1.51	6.79	4.18	1.64	6.53	4.07	1.77	6.27	3.95	1.92	5.76	3.69	2.08	5.32	3.47	2.30
		27°C	7.05	4.93	1.51	6.80	4.82	1.64	6.54	4.71	1.77	6.28	4.60	1.92	5.77	4.30	2.09	5.33	4.07	2.30
		30°C	7.08	6.09	1.51	6.84	5.95	1.64	6.59	5.82	1.78	6.34	5.68	1.93	5.84	5.31	2.09	5.41	5.02	2.30
		33°C	7.20	7.20	1.52	6.98	6.98	1.65	6.76	6.76	1.79	6.53	6.53	1.94	6.05	6.05	2.11	5.66	5.66	2.32
	22°C	27°C	7.73	4.19	1.54	7.46	4.09	1.67	7.18	3.99	1.81	6.90	3.88	1.96	6.34	3.62	2.13	5.86	3.42	2.34
		30°C	7.74	5.15	1.54	7.47	5.04	1.67	7.19	4.93	1.81	6.90	4.81	1.96	6.35	4.51	2.13	5.87	4.28	2.34
		33°C	7.75	6.03	1.54	7.48	5.91	1.67	7.21	5.79	1.81	6.93	5.67	1.96	6.37	5.32	2.13	5.91	5.05	2.35
		36°C	7.80	6.82	1.54	7.55	6.69	1.67	7.29	6.55	1.81	7.02	6.40	1.97	6.48	5.98	2.14	6.04	5.65	2.36
680	16°C	21°C	6.62	4.72	1.50	6.38	4.60	1.62	6.14	4.48	1.76	5.88	4.36	1.90	5.39	4.06	2.06	4.97	3.82	2.28
		24°C	6.66	5.74	1.50	6.42	5.60	1.62	6.17	5.47	1.76	5.92	5.32	1.91	5.44	4.97	2.07	5.03	4.68	2.28
		27°C	6.76	6.58	1.51	6.54	6.41	1.63	6.32	6.23	1.77	6.10	6.04	1.92	5.63	5.59	2.08	5.25	5.22	2.30
		30°C	7.10	7.10	1.52	6.90	6.90	1.65	6.68	6.68	1.78	6.46	6.46	1.94	5.98	5.98	2.10	5.59	5.59	2.32
	19°C	24°C	7.29	4.53	1.52	7.03	4.42	1.65	6.76	4.31	1.79	6.48	4.19	1.94	5.95	3.91	2.10	5.49	3.68	2.32
		27°C	7.31	5.24	1.53	7.05	5.12	1.65	6.78	5.00	1.79	6.51	4.88	1.94	5.98	4.56	2.10	5.52	4.32	2.32
		30°C	7.37	6.45	1.53	7.11	6.31	1.65	6.86	6.17	1.79	6.59	6.01	1.94	6.07	5.61	2.11	5.64	5.29	2.33
		33°C	7.53	7.53	1.54	7.31	7.31	1.66	7.09	7.09	1.81	6.85	6.85	1.96	6.35	6.35	2.13	5.94	5.94	2.35
	22°C	27°C	8.00	4.43	1.55	7.71	4.34	1.68	7.42	4.23	1.82	7.13	4.12	1.98	6.55	3.84	2.14	6.05	3.63	2.36
		30°C	8.02	5.46	1.55	7.73	5.36	1.68	7.44	5.24	1.82	7.14	5.12	1.98	6.56	4.80	2.15	6.07	4.55	2.36
		33°C	8.04	6.40	1.56	7.77	6.29	1.69	7.48	6.16	1.83	7.19	6.02	1.98	6.61	5.65	2.15	6.12	5.36	2.37
		36°C	8.11	7.23	1.56	7.86	7.10	1.69	7.59	6.94	1.83	7.32	6.77	1.99	6.76	6.32	2.16	6.31	5.95	2.38

Remark:
AFR: Air flow rate (CFM)
EWB: Entering Wet Bulb Temp. (°C)
EDB: Entering Dry Bulb Temp. (°C)
TC: Total Cooling Capacity (kW)
SC: Sensible Cooling Capacity (kW)
PI: Power Input (kW)

Notes:
1. Ratings shown are net capacities.
2. shows nominal capacities.
3. Direct interpolation is permissible. Do not extrapolate.
4. Unit is able to operate at ambient from 19°C to 46°C DB without pressure trip.

DAIKIN_FFRN.indb 33 12/27/2012 9:28:11 AM

Model: FCRN71EXV1 - RR71CXV1
Cooling Mode

AFR (CFM)	EWB	EDB	Outdoor temperature																	
			19°C			25°C			30°C			35°C			40°C			46°C		
			TC	SC	PI	TC	SC	PI	TC	SC	PI	TC	SC	PI	TC	SC	PI	TC	SC	PI
620	16°C	21°C	7.46	5.49	2.12	7.19	5.34	2.29	6.93	5.20	2.48	6.65	5.05	2.69	6.10	4.70	2.92	5.64	4.42	3.22
		24°C	7.47	6.57	2.12	7.20	6.42	2.29	6.94	6.27	2.48	6.66	6.11	2.69	6.12	5.71	2.92	5.66	5.39	3.22
		27°C	7.53	7.45	2.12	7.28	7.28	2.30	7.02	7.02	2.49	6.76	6.76	2.70	6.23	6.23	2.93	5.80	5.80	3.23
		30°C	7.76	7.76	2.13	7.54	7.54	2.31	7.31	7.31	2.51	7.07	7.07	2.72	6.55	6.55	2.96	6.13	6.13	3.26
	19°C	24°C	8.23	5.12	2.15	7.94	4.99	2.33	7.65	4.86	2.53	7.34	4.72	2.74	6.75	4.40	2.97	6.24	4.14	3.28
		27°C	8.23	5.86	2.15	7.94	5.73	2.33	7.65	5.60	2.53	7.35	5.46	2.74	6.76	5.11	2.97	6.25	4.84	3.28
		30°C	8.24	7.23	2.15	7.96	7.08	2.33	7.68	6.92	2.53	7.39	6.76	2.74	6.80	6.32	2.98	6.31	5.98	3.28
		33°C	8.34	8.34	2.16	8.07	8.07	2.34	7.81	7.81	2.54	7.54	7.54	2.75	6.98	6.98	2.99	6.52	6.52	3.30
	22°C	27°C	9.05	5.01	2.19	8.74	4.89	2.38	8.42	4.77	2.57	8.09	4.64	2.79	7.44	4.32	3.03	6.89	4.08	3.34
		30°C	9.05	6.11	2.19	8.74	5.98	2.38	8.42	5.84	2.58	8.09	5.71	2.79	7.44	5.34	3.03	6.89	5.06	3.34
		33°C	9.06	7.14	2.19	8.74	7.00	2.38	8.43	6.86	2.58	8.10	6.72	2.79	7.45	6.31	3.03	6.91	5.99	3.34
		36°C	9.09	8.09	2.19	8.79	7.93	2.38	8.48	7.77	2.58	8.17	7.59	2.80	7.54	7.12	3.04	7.01	6.75	3.35
725	16°C	21°C	7.76	5.72	2.14	7.48	5.58	2.31	7.20	5.43	2.51	6.90	5.27	2.72	6.33	4.91	2.95	5.84	4.62	3.25
		24°C	7.78	6.95	2.14	7.50	6.78	2.31	7.22	6.62	2.51	6.93	6.46	2.72	6.37	6.02	2.95	5.89	5.68	3.25
		27°C	7.88	7.88	2.15	7.61	7.61	2.32	7.35	7.35	2.51	7.09	7.09	2.73	6.54	6.54	2.96	6.09	6.09	3.27
		30°C	8.21	8.21	2.16	7.97	7.97	2.34	7.72	7.72	2.54	7.47	7.47	2.75	6.92	6.92	2.99	6.47	6.47	3.30
	19°C	24°C	8.55	5.41	2.17	8.24	5.28	2.35	7.93	5.14	2.55	7.62	5.00	2.76	6.99	4.66	3.00	6.46	4.39	3.30
		27°C	8.56	6.24	2.17	8.26	6.10	2.35	7.95	5.96	2.55	7.63	5.82	2.77	7.01	5.44	3.00	6.48	5.15	3.31
		30°C	8.60	7.69	2.18	8.31	7.53	2.36	8.01	7.36	2.55	7.70	7.18	2.77	7.09	6.71	3.01	6.58	6.34	3.31
		33°C	8.75	8.75	2.18	8.48	8.48	2.37	8.21	8.21	2.57	7.94	7.94	2.79	7.35	7.35	3.03	6.87	6.87	3.34
	22°C	27°C	9.39	5.30	2.21	9.06	5.18	2.40	8.73	5.05	2.60	8.38	4.91	2.82	7.70	4.58	3.06	7.12	4.32	3.37
		30°C	9.40	6.50	2.21	9.07	6.37	2.40	8.73	6.23	2.60	8.39	6.08	2.82	7.71	5.70	3.06	7.13	5.41	3.37
		33°C	9.42	7.62	2.22	9.09	7.48	2.40	8.76	7.32	2.60	8.42	7.17	2.82	7.74	6.72	3.06	7.18	6.38	3.37
		36°C	9.48	8.62	2.22	9.17	8.45	2.41	8.85	8.28	2.61	8.53	8.09	2.83	7.87	7.57	3.07	7.34	7.14	3.39
860	16°C	21°C	8.05	5.97	2.16	7.75	5.82	2.33	7.45	5.67	2.53	7.15	5.51	2.74	6.55	5.13	2.97	6.04	4.83	3.27
		24°C	8.09	7.26	2.16	7.80	7.09	2.33	7.50	6.91	2.53	7.20	6.73	2.74	6.61	6.28	2.97	6.11	5.92	3.28
		27°C	8.22	8.22	2.17	7.95	7.95	2.34	7.68	7.68	2.54	7.41	7.41	2.76	6.84	6.84	2.99	6.38	6.38	3.30
		30°C	8.63	8.63	2.18	8.38	8.38	2.37	8.12	8.12	2.57	7.85	7.85	2.79	7.27	7.27	3.03	6.79	6.79	3.34
	19°C	24°C	8.86	5.73	2.19	8.54	5.59	2.37	8.21	5.44	2.57	7.88	5.30	2.79	7.23	4.94	3.02	6.67	4.66	3.33
		27°C	8.88	6.63	2.19	8.56	6.48	2.37	8.24	6.32	2.57	7.91	6.17	2.79	7.26	5.77	3.03	6.71	5.46	3.33
		30°C	8.96	8.16	2.20	8.64	7.98	2.38	8.33	7.80	2.58	8.01	7.60	2.80	7.38	7.10	3.03	6.85	6.69	3.35
		33°C	9.15	9.15	2.21	8.88	8.88	2.39	8.61	8.61	2.60	8.33	8.33	2.82	7.71	7.71	3.06	7.21	7.21	3.38
	22°C	27°C	9.72	5.60	2.23	9.37	5.48	2.42	9.02	5.34	2.62	8.66	5.20	2.84	7.95	4.86	3.08	7.35	4.58	3.39
		30°C	9.74	6.91	2.23	9.39	6.78	2.42	9.04	6.63	2.62	8.68	6.48	2.84	7.97	6.07	3.08	7.37	5.75	3.40
		33°C	9.77	8.10	2.24	9.44	7.96	2.42	9.09	7.79	2.63	8.73	7.62	2.85	8.03	7.14	3.09	7.44	6.77	3.40
		36°C	9.86	9.14	2.24	9.55	8.98	2.43	9.22	8.78	2.64	8.89	8.56	2.86	8.21	7.99	3.11	7.66	7.52	3.43

Remark:
AFR: Air flow rate (CFM)
EWB: Entering Wet Bulb Temp. (°C)
EDB: Entering Dry Bulb Temp. (°C)
TC: Total Cooling Capacity (kW)
SC: Sensible Cooling Capacity (kW)
PI: Power Input (kW)

Notes:
1. Ratings shown are net capacities.
2. shows nominal capacities.
3. Direct interpolation is permissible. Do not extrapolate.
4. Unit is able to operate at ambient from 19°C to 46°C DB without pressure trip.

DAIKIN_FFRN.indb 34 12/27/2012 9:28:12 AM

Model: FCRN100EXV1- RR90DXV1
Cooling Mode

AFR (CFM)	EWB	EDB	Outdoor temperature																	
			19°C			25°C			30°C			35°C			40°C			46°C		
			TC	SC	PI	TC	SC	PI	TC	SC	PI	TC	SC	PI	TC	SC	PI	TC	SC	PI
740	16°C	21°C	8.07	6.17	2.14	7.78	6.00	2.32	7.50	5.84	2.51	7.19	5.68	2.72	6.61	5.28	2.95	6.10	4.97	3.25
		24°C	8.08	7.38	2.14	7.79	7.21	2.32	7.51	7.05	2.51	7.21	6.87	2.72	6.62	6.42	2.95	6.12	6.05	3.26
		27°C	8.14	8.14	2.15	7.87	7.87	2.32	7.60	7.60	2.52	7.31	7.31	2.73	6.75	6.75	2.96	6.28	6.28	3.27
		30°C	8.40	8.40	2.16	8.15	8.15	2.34	7.91	7.91	2.53	7.65	7.65	2.75	7.09	7.09	2.99	6.64	6.64	3.30
	19°C	24°C	8.90	5.76	2.18	8.59	5.61	2.36	8.27	5.46	2.55	7.95	5.31	2.77	7.30	4.94	3.00	6.75	4.65	3.31
		27°C	8.91	6.59	2.18	8.59	6.44	2.36	8.28	6.29	2.55	7.95	6.14	2.77	7.31	5.74	3.00	6.76	5.44	3.31
		30°C	8.92	8.13	2.18	8.61	7.95	2.36	8.31	7.78	2.56	7.99	7.59	2.77	7.36	7.10	3.01	6.83	6.72	3.32
		33°C	9.03	9.03	2.18	8.73	8.73	2.36	8.45	8.45	2.56	8.16	8.16	2.78	7.55	7.55	3.02	7.06	7.06	3.34
	22°C	27°C	9.79	5.63	2.22	9.45	5.50	2.40	9.11	5.36	2.60	8.75	5.21	2.82	8.05	4.86	3.06	7.45	4.58	3.37
		30°C	9.80	6.87	2.22	9.46	6.72	2.40	9.11	6.57	2.60	8.76	6.41	2.82	8.05	6.00	3.06	7.45	5.69	3.37
		33°C	9.80	8.02	2.22	9.46	7.87	2.40	9.12	7.71	2.60	8.76	7.55	2.82	8.06	7.09	3.06	7.47	6.73	3.38
		36°C	9.83	9.09	2.22	9.51	8.91	2.40	9.18	8.73	2.61	8.84	8.53	2.83	8.16	8.00	3.07	7.58	7.58	3.39
860	16°C	21°C	8.40	6.43	2.16	8.09	6.26	2.34	7.79	6.10	2.53	7.47	5.93	2.75	6.85	5.52	2.98	6.32	5.19	3.28
		24°C	8.42	7.81	2.16	8.12	7.62	2.34	7.82	7.44	2.53	7.50	7.25	2.75	6.89	6.77	2.98	6.37	6.37	3.29
		27°C	8.52	8.52	2.17	8.24	8.24	2.35	7.95	7.95	2.54	7.67	7.67	2.76	7.08	7.08	2.99	6.59	6.59	3.30
		30°C	8.88	8.88	2.18	8.62	8.62	2.36	8.36	8.36	2.56	8.09	8.09	2.78	7.49	7.49	3.03	7.00	7.00	3.34
	19°C	24°C	9.25	6.08	2.20	8.92	5.93	2.38	8.59	5.78	2.58	8.24	5.62	2.79	7.57	5.23	3.03	6.99	4.93	3.34
		27°C	9.27	7.01	2.20	8.94	6.85	2.38	8.60	6.70	2.58	8.26	6.54	2.80	7.59	6.11	3.03	7.01	5.79	3.34
		30°C	9.31	8.64	2.20	8.99	8.46	2.38	8.67	8.27	2.58	8.33	8.07	2.80	7.67	7.54	3.04	7.12	7.12	3.35
		33°C	9.47	9.47	2.21	9.18	9.18	2.39	8.89	8.89	2.60	8.59	8.59	2.82	7.96	7.96	3.06	7.44	7.44	3.38
	22°C	27°C	10.16	5.96	2.24	9.81	5.82	2.42	9.44	5.67	2.63	9.07	5.52	2.85	8.33	5.15	3.09	7.71	4.85	3.40
		30°C	10.18	7.31	2.24	9.82	7.16	2.42	9.45	7.00	2.63	9.08	6.84	2.85	8.34	6.40	3.09	7.72	6.07	3.41
		33°C	10.20	8.57	2.24	9.84	8.40	2.43	9.48	8.23	2.63	9.11	8.05	2.85	8.38	7.56	3.10	7.77	7.17	3.41
		36°C	10.26	9.68	2.24	9.93	9.50	2.43	9.58	9.30	2.64	9.23	9.08	2.86	8.52	8.50	3.11	7.94	7.94	3.43
1030	16°C	21°C	8.71	6.71	2.18	8.39	6.54	2.36	8.07	6.37	2.55	7.73	6.19	2.77	7.09	5.77	3.00	6.54	5.43	3.31
		24°C	8.75	8.15	2.18	8.44	7.96	2.36	8.12	7.77	2.56	7.79	7.56	2.77	7.16	7.06	3.01	6.61	6.61	3.31
		27°C	8.90	8.90	2.19	8.60	8.60	2.37	8.31	8.31	2.57	8.02	8.02	2.79	7.41	7.41	3.02	6.90	6.90	3.34
		30°C	9.34	9.34	2.21	9.07	9.07	2.39	8.79	8.79	2.59	8.50	8.50	2.82	7.87	7.87	3.06	7.35	7.35	3.38
	19°C	24°C	9.59	6.44	2.22	9.24	6.28	2.40	8.89	6.12	2.60	8.53	5.95	2.82	7.82	5.55	3.06	7.22	5.23	3.37
		27°C	9.61	7.45	2.22	9.27	7.28	2.40	8.92	7.11	2.60	8.56	6.93	2.82	7.86	6.48	3.06	7.26	6.13	3.37
		30°C	9.69	9.17	2.22	9.35	8.97	2.41	9.01	8.76	2.61	8.67	8.54	2.83	7.98	7.98	3.07	7.41	7.41	3.38
		33°C	9.90	9.90	2.23	9.61	9.61	2.42	9.32	9.32	2.62	9.01	9.01	2.85	8.35	8.35	3.10	7.81	7.81	3.42
	22°C	27°C	10.52	6.30	2.26	10.14	6.16	2.45	9.76	6.00	2.65	9.37	5.85	2.87	8.61	5.46	3.12	7.95	5.15	3.43
		30°C	10.54	7.76	2.26	10.16	7.62	2.45	9.78	7.45	2.65	9.39	7.28	2.88	8.63	6.82	3.12	7.98	6.46	3.43
		33°C	10.58	9.10	2.26	10.21	8.94	2.45	9.84	8.75	2.66	9.45	8.56	2.88	8.69	8.02	3.12	8.05	7.61	3.44
		36°C	10.67	10.27	2.27	10.34	10.09	2.46	9.98	9.86	2.66	9.62	9.62	2.89	8.89	8.89	3.14	8.29	8.29	3.46

Remark:
AFR: Air flow rate (CFM)
EWB: Entering Wet Bulb Temp. (°C)
EDB: Entering Dry Bulb Temp. (°C)
TC: Total Cooling Capacity (kW)
SC: Sensible Cooling Capacity (kW)
PI: Power Input (kW)

Notes:
1. Ratings shown are net capacities.
2. shows nominal capacities.
3. Direct interpolation is permissible. Do not extrapolate.
4. Unit is able to operate at ambient from 19°C to 46°C DB without pressure trip.

DAIKIN_FFRN.indb 35 12/27/2012 9:28:12 AM

Model: FCRN100EXV1- RR90DXV1
Cooling Mode

AFR (CFM)	EWB	EDB	Outdoor temperature																	
			19°C			25°C			30°C			35°C			40°C			46°C		
			TC	SC	PI	TC	SC	PI	TC	SC	PI	TC	SC	PI	TC	SC	PI	TC	SC	PI
740	16°C	21°C	8.57	6.14	2.10	8.27	5.98	2.28	7.96	5.82	2.47	7.64	5.66	2.67	7.02	5.26	2.90	6.48	4.95	3.20
		24°C	8.58	7.36	2.11	8.28	7.19	2.28	7.97	7.02	2.47	7.65	6.85	2.67	7.03	6.39	2.90	6.50	6.03	3.20
		27°C	8.65	8.34	2.11	8.36	8.15	2.28	8.07	7.96	2.47	7.76	7.76	2.68	7.16	7.16	2.91	6.66	6.66	3.21
		30°C	8.92	8.92	2.12	8.66	8.66	2.29	8.40	8.40	2.49	8.13	8.13	2.70	7.53	7.53	2.93	7.05	7.05	3.24
	19°C	24°C	9.45	5.74	2.14	9.12	5.59	2.31	8.79	5.44	2.51	8.44	5.29	2.72	7.76	4.93	2.95	7.17	4.64	3.25
		27°C	9.46	6.56	2.14	9.13	6.41	2.31	8.79	6.27	2.51	8.45	6.12	2.72	7.76	5.72	2.95	7.18	5.42	3.25
		30°C	9.47	8.10	2.14	9.15	7.93	2.32	8.82	7.75	2.51	8.49	7.56	2.72	7.82	7.07	2.95	7.25	6.69	3.26
		33°C	9.59	9.59	2.14	9.27	9.27	2.32	8.97	8.97	2.52	8.67	8.67	2.73	8.02	8.02	2.97	7.50	7.50	3.28
	22°C	27°C	10.40	5.61	2.18	10.04	5.48	2.36	9.67	5.34	2.56	9.30	5.19	2.77	8.55	4.84	3.01	7.91	4.56	3.31
		30°C	10.40	6.84	2.18	10.04	6.70	2.36	9.68	6.54	2.56	9.30	6.39	2.77	8.55	5.98	3.01	7.92	5.67	3.31
		33°C	10.41	7.99	2.18	10.05	7.84	2.36	9.68	7.68	2.56	9.30	7.52	2.77	8.56	7.06	3.01	7.94	6.71	3.32
		36°C	10.44	9.06	2.18	10.10	8.88	2.36	9.75	8.69	2.56	9.39	8.50	2.78	8.66	7.97	3.02	8.05	7.56	3.33
860	16°C	21°C	8.92	6.41	2.12	8.60	6.24	2.30	8.27	6.08	2.49	7.93	5.91	2.70	7.28	5.50	2.92	6.71	5.18	3.22
		24°C	8.94	7.78	2.12	8.62	7.60	2.30	8.30	7.41	2.49	7.96	7.23	2.70	7.32	6.74	2.93	6.76	6.36	3.23
		27°C	9.05	8.83	2.13	8.75	8.63	2.30	8.45	8.41	2.50	8.14	8.14	2.71	7.52	7.52	2.94	7.00	7.00	3.25
		30°C	9.43	9.43	2.14	9.16	9.16	2.32	8.88	8.88	2.52	8.59	8.59	2.74	7.96	7.96	2.97	7.44	7.44	3.28
	19°C	24°C	9.82	6.06	2.16	9.47	5.91	2.34	9.12	5.76	2.53	8.75	5.60	2.74	8.04	5.22	2.98	7.42	4.92	3.28
		27°C	9.84	6.98	2.16	9.49	6.83	2.34	9.14	6.67	2.53	8.77	6.52	2.75	8.06	6.09	2.98	7.45	5.77	3.28
		30°C	9.89	8.61	2.16	9.54	8.43	2.34	9.20	8.24	2.54	8.85	8.04	2.75	8.15	7.51	2.98	7.56	7.10	3.29
		33°C	10.05	10.05	2.17	9.75	9.75	2.35	9.44	9.44	2.55	9.12	9.12	2.77	8.45	8.45	3.01	7.90	7.90	3.32
	22°C	27°C	10.79	5.94	2.20	10.41	5.80	2.38	10.03	5.65	2.58	9.63	5.50	2.80	8.85	5.13	3.04	8.18	4.84	3.34
		30°C	10.81	7.28	2.20	10.43	7.13	2.38	10.04	6.97	2.58	9.64	6.81	2.80	8.86	6.38	3.04	8.20	6.05	3.34
		33°C	10.83	8.53	2.20	10.45	8.37	2.38	10.07	8.20	2.58	9.67	8.03	2.80	8.90	7.53	3.04	8.25	7.15	3.35
		36°C	10.89	9.65	2.20	10.54	9.47	2.39	10.17	9.27	2.59	9.80	9.05	2.81	9.04	8.47	3.05	8.43	7.99	3.37
1030	16°C	21°C	9.25	6.69	2.14	8.91	6.52	2.32	8.57	6.35	2.51	8.21	6.17	2.72	7.53	5.74	2.95	6.94	5.41	3.25
		24°C	9.30	8.13	2.14	8.96	7.93	2.32	8.62	7.74	2.51	8.27	7.54	2.72	7.60	7.03	2.95	7.02	6.63	3.25
		27°C	9.45	9.31	2.15	9.14	9.07	2.33	8.83	8.82	2.52	8.51	8.51	2.74	7.87	7.87	2.97	7.33	7.33	3.28
		30°C	9.92	9.92	2.17	9.63	9.63	2.35	9.33	9.33	2.55	9.03	9.03	2.77	8.36	8.36	3.01	7.80	7.80	3.32
	19°C	24°C	10.18	6.41	2.18	9.81	6.26	2.36	9.44	6.10	2.55	9.05	5.93	2.77	8.31	5.53	3.00	7.67	5.21	3.31
		27°C	10.21	7.42	2.18	9.84	7.25	2.36	9.47	7.08	2.55	9.09	6.91	2.77	8.35	6.46	3.00	7.71	6.11	3.31
		30°C	10.29	9.13	2.18	9.93	8.93	2.36	9.57	8.73	2.56	9.21	8.51	2.78	8.48	7.95	3.01	7.87	7.49	3.32
		33°C	10.52	10.52	2.19	10.21	10.21	2.38	9.89	9.89	2.58	9.57	9.57	2.80	8.86	8.86	3.04	8.29	8.29	3.36
	22°C	27°C	11.17	6.27	2.22	10.77	6.14	2.40	10.37	5.98	2.60	9.95	5.83	2.82	9.14	5.44	3.06	8.45	5.13	3.37
		30°C	11.19	7.74	2.22	10.79	7.59	2.40	10.39	7.42	2.60	9.97	7.26	2.82	9.16	6.79	3.06	8.47	6.44	3.37
		33°C	11.23	9.07	2.22	10.84	8.91	2.41	10.44	8.72	2.61	10.03	8.53	2.83	9.23	7.99	3.07	8.55	7.59	3.38
		36°C	11.33	10.24	2.23	10.98	10.05	2.41	10.60	9.83	2.62	10.22	9.59	2.84	9.44	8.94	3.08	8.80	8.42	3.40

Remark:
AFR: Air flow rate (CFM)
EWB: Entering Wet Bulb Temp. (°C)
EDB: Entering Dry Bulb Temp. (°C)
TC: Total Cooling Capacity (kW)
SC: Sensible Cooling Capacity (kW)
PI: Power Input (kW)

Notes:
1. Ratings shown are net capacities.
2. shows nominal capacities.
3. Direct interpolation is permissible. Do not extrapolate.
4. Unit is able to operate at ambient from 19°C to 46°C DB without pressure trip.

DAIKIN_FFRN.indb 36 12/27/2012 9:28:12 AM

Model: FCRN100EXV1- RR100DXV1
Cooling Mode

AFR (CFM)	EWB	EDB	Outdoor temperature																	
			19°C			25°C			30°C			35°C			40°C			46°C		
			TC	SC	PI	TC	SC	PI	TC	SC	PI	TC	SC	PI	TC	SC	PI	TC	SC	PI
740	16°C	21°C	10.75	7.10	2.98	10.37	6.91	3.22	9.98	6.73	3.49	9.58	6.53	3.78	8.80	6.08	4.10	8.12	5.72	4.52
		24°C	10.76	8.50	2.98	10.38	8.30	3.22	10.00	8.11	3.49	9.60	7.91	3.78	8.82	7.39	4.11	8.15	6.97	4.53
		27°C	10.85	9.63	2.98	10.49	9.42	3.23	10.12	9.19	3.50	9.74	8.96	3.79	8.98	8.34	4.12	8.36	7.83	4.54
		30°C	11.18	11.18	3.00	10.86	10.86	3.25	10.53	10.53	3.52	10.19	10.19	3.82	9.45	9.45	4.15	8.84	8.84	4.59
	19°C	24°C	11.85	6.63	3.03	11.44	6.46	3.28	11.02	6.29	3.55	10.58	6.11	3.85	9.73	5.69	4.18	8.99	5.36	4.60
		27°C	11.86	7.58	3.03	11.44	7.41	3.28	11.03	7.24	3.55	10.59	7.06	3.85	9.74	6.61	4.18	9.00	6.26	4.60
		30°C	11.88	9.35	3.03	11.47	9.16	3.28	11.07	8.95	3.55	10.65	8.74	3.85	9.80	8.17	4.18	9.09	7.73	4.61
		33°C	12.02	12.02	3.03	11.63	11.63	3.29	11.25	11.25	3.56	10.87	10.87	3.87	10.06	10.06	4.20	9.40	9.40	4.64
	22°C	27°C	13.04	6.49	3.08	12.59	6.33	3.34	12.13	6.17	3.62	11.66	6.00	3.92	10.72	5.59	4.26	9.92	5.27	4.69
		30°C	13.05	7.90	3.08	12.60	7.73	3.34	12.13	7.56	3.62	11.66	7.38	3.92	10.72	6.91	4.26	9.93	6.55	4.69
		33°C	13.05	9.23	3.08	12.60	9.05	3.34	12.14	8.87	3.62	11.67	8.69	3.93	10.74	8.16	4.26	9.95	7.75	4.69
		36°C	13.10	10.47	3.08	12.66	10.26	3.34	12.22	10.04	3.62	11.78	9.82	3.93	10.86	9.21	4.27	10.10	8.74	4.71
860	16°C	21°C	11.18	7.40	3.01	10.78	7.21	3.25	10.37	7.02	3.52	9.95	6.82	3.82	9.13	6.35	4.14	8.42	5.98	4.56
		24°C	11.22	8.98	3.01	10.81	8.77	3.25	10.41	8.56	3.52	9.99	8.35	3.82	9.18	7.79	4.14	8.48	7.35	4.57
		27°C	11.35	10.20	3.01	10.97	9.97	3.26	10.59	9.71	3.53	10.21	9.42	3.83	9.43	8.75	4.16	8.78	8.19	4.59
		30°C	11.83	11.83	3.03	11.48	11.48	3.29	11.13	11.13	3.56	10.77	10.77	3.87	9.98	9.98	4.21	9.33	9.33	4.64
	19°C	24°C	12.32	7.00	3.05	11.88	6.83	3.31	11.44	6.65	3.58	10.98	6.47	3.88	10.08	6.03	4.21	9.31	5.68	4.64
		27°C	12.34	8.07	3.06	11.90	7.89	3.31	11.46	7.71	3.58	11.00	7.53	3.89	10.10	7.04	4.21	9.34	6.66	4.64
		30°C	12.40	9.95	3.06	11.97	9.73	3.31	11.54	9.52	3.59	11.10	9.28	3.89	10.22	8.68	4.22	9.48	8.20	4.66
		33°C	12.61	12.61	3.07	12.22	12.22	3.33	11.83	11.83	3.61	11.44	11.44	3.92	10.60	10.60	4.26	9.91	9.91	4.70
	22°C	27°C	13.54	6.86	3.11	13.06	6.70	3.37	12.57	6.53	3.65	12.07	6.35	3.96	11.10	5.92	4.30	10.26	5.59	4.73
		30°C	13.55	8.41	3.11	13.08	8.24	3.37	12.59	8.05	3.65	12.09	7.87	3.96	11.11	7.37	4.30	10.28	6.99	4.73
		33°C	13.58	9.86	3.11	13.11	9.67	3.37	12.62	9.47	3.66	12.13	9.27	3.97	11.16	8.70	4.30	10.34	8.26	4.74
		36°C	13.66	11.14	3.12	13.22	10.93	3.38	12.76	10.71	3.67	12.29	10.46	3.98	11.34	9.79	4.32	10.58	9.23	4.76
1030	16°C	21°C	11.60	7.72	3.03	11.17	7.53	3.28	10.74	7.33	3.55	10.30	7.12	3.85	9.45	6.64	4.17	8.71	6.25	4.60
		24°C	11.66	9.39	3.03	11.23	9.16	3.28	10.81	8.94	3.55	10.38	8.70	3.85	9.53	8.12	4.18	8.80	7.66	4.60
		27°C	11.85	10.76	3.04	11.46	10.48	3.29	11.07	10.19	3.57	10.67	9.87	3.87	9.86	9.14	4.20	9.19	8.54	4.64
		30°C	12.44	12.44	3.07	12.08	12.08	3.32	11.70	11.70	3.61	11.32	11.32	3.91	10.48	10.48	4.25	9.79	9.79	4.69
	19°C	24°C	12.77	7.41	3.08	12.30	7.23	3.33	11.84	7.04	3.61	11.35	6.85	3.92	10.42	6.39	4.25	9.62	6.02	4.68
		27°C	12.80	8.57	3.08	12.34	8.38	3.34	11.88	8.18	3.61	11.40	7.98	3.92	10.47	7.46	4.25	9.67	7.06	4.68
		30°C	12.91	10.55	3.09	12.45	10.32	3.34	12.01	10.08	3.62	11.55	9.83	3.93	10.63	9.18	4.26	9.87	8.65	4.70
		33°C	13.19	13.19	3.10	12.80	12.80	3.36	12.41	12.41	3.65	12.00	12.00	3.96	11.12	11.12	4.30	10.40	10.40	4.75
	22°C	27°C	14.01	7.25	3.14	13.51	7.09	3.40	13.00	6.91	3.68	12.48	6.73	3.99	11.46	6.28	4.33	10.59	5.93	4.77
		30°C	14.04	8.94	3.14	13.54	8.77	3.40	13.03	8.58	3.69	12.50	8.38	4.00	11.49	7.85	4.33	10.63	7.44	4.77
		33°C	14.09	10.47	3.14	13.60	10.29	3.41	13.10	10.07	3.69	12.58	9.85	4.00	11.58	9.23	4.34	10.72	8.76	4.78
		36°C	14.21	11.82	3.15	13.77	11.61	3.42	13.29	11.35	3.70	12.81	11.07	4.02	11.84	10.33	4.36	11.04	9.72	4.81

Remark:
AFR: Air flow rate (CFM)
EWB: Entering Wet Bulb Temp. (°C)
EDB: Entering Dry Bulb Temp. (°C)
TC: Total Cooling Capacity (kW)
SC: Sensible Cooling Capacity (kW)
PI: Power Input (kW)

Notes:
1. Ratings shown are net capacities.
2. shows nominal capacities.
3. Direct interpolation is permissible. Do not extrapolate.
4. Unit is able to operate at ambient from 19°C to 46°C DB without pressure trip.

DAIKIN_FFRN.indb 37 12/27/2012 9:28:12 AM

Model: FCRN125EXV1- RR125DXY1
Cooling Mode

AFR (CFM)	EWB	EDB	Outdoor temperature																	
			19°C			25°C			30°C			35°C			40°C			46°C		
			TC	SC	PI	TC	SC	PI	TC	SC	PI	TC	SC	PI	TC	SC	PI	TC	SC	PI
930	16°C	21°C	11.88	8.18	3.34	11.46	7.97	3.61	11.03	7.75	3.91	10.59	7.53	4.24	9.73	7.01	4.60	8.98	6.59	5.07
		24°C	11.90	9.80	3.34	11.47	9.57	3.61	11.05	9.35	3.91	10.61	9.12	4.24	9.75	8.52	4.60	9.01	8.04	5.07
		27°C	11.99	11.11	3.34	11.59	10.86	3.61	11.18	10.60	3.92	10.76	10.33	4.25	9.93	9.61	4.61	9.24	9.03	5.09
		30°C	12.36	12.36	3.36	12.00	12.00	3.64	11.64	11.64	3.94	11.27	11.27	4.28	10.44	10.44	4.65	9.77	9.77	5.14
	19°C	24°C	13.11	7.64	3.39	12.65	7.45	3.67	12.18	7.25	3.97	11.70	7.04	4.31	10.75	6.56	4.68	9.94	6.18	5.15
		27°C	13.11	8.74	3.39	12.65	8.54	3.67	12.19	8.35	3.98	11.71	8.15	4.31	10.76	7.62	4.68	9.95	7.22	5.16
		30°C	13.13	10.79	3.39	12.68	10.56	3.67	12.23	10.32	3.98	11.77	10.07	4.32	10.84	9.42	4.68	10.05	8.92	5.16
		33°C	13.29	13.29	3.40	12.86	12.86	3.68	12.44	12.44	3.99	12.02	12.02	4.33	11.12	11.12	4.71	10.39	10.39	5.20
	22°C	27°C	14.42	7.48	3.45	13.92	7.30	3.74	13.41	7.11	4.05	12.89	6.92	4.39	11.85	6.45	4.77	10.97	6.08	5.25
		30°C	14.42	9.11	3.45	13.92	8.92	3.74	13.41	8.72	4.05	12.89	8.51	4.40	11.85	7.96	4.77	10.97	7.55	5.25
		33°C	14.43	10.64	3.45	13.93	10.44	3.74	13.42	10.23	4.05	12.90	10.02	4.40	11.87	9.41	4.77	11.00	8.94	5.26
		36°C	14.48	12.07	3.45	14.00	11.83	3.74	13.51	11.58	4.06	13.02	11.32	4.40	12.01	10.62	4.78	11.16	10.07	5.27
1030	16°C	21°C	12.36	8.53	3.37	11.91	8.31	3.64	11.46	8.09	3.94	10.99	7.86	4.27	10.09	7.32	4.63	9.31	6.89	5.11
		24°C	12.40	10.36	3.37	11.95	10.11	3.64	11.51	9.87	3.95	11.04	9.62	4.28	10.14	8.98	4.64	9.38	8.47	5.11
		27°C	12.55	11.76	3.38	12.13	11.49	3.65	11.71	11.19	3.96	11.29	10.86	4.29	10.42	10.09	4.66	9.71	9.44	5.14
		30°C	13.07	13.07	3.40	12.69	12.69	3.68	12.31	12.31	3.99	11.91	11.91	4.33	11.03	11.03	4.71	10.31	10.31	5.20
	19°C	24°C	13.62	8.07	3.42	13.13	7.87	3.70	12.64	7.66	4.01	12.13	7.45	4.35	11.14	6.95	4.72	10.29	6.55	5.20
		27°C	13.64	9.30	3.42	13.15	9.09	3.70	12.66	8.89	4.01	12.15	8.68	4.35	11.17	8.11	4.72	10.32	7.68	5.20
		30°C	13.71	11.47	3.43	13.23	11.22	3.71	12.76	10.97	4.02	12.27	10.70	4.36	11.30	10.01	4.73	10.48	9.45	5.22
		33°C	13.94	13.94	3.44	13.51	13.51	3.72	13.08	13.08	4.04	12.65	12.65	4.39	11.71	11.71	4.77	10.95	10.95	5.26
	22°C	27°C	14.96	7.90	3.48	14.44	7.72	3.77	13.90	7.52	4.09	13.35	7.32	4.44	12.26	6.83	4.81	11.34	6.44	5.30
		30°C	14.98	9.70	3.48	14.45	9.50	3.77	13.91	9.29	4.09	13.36	9.07	4.44	12.28	8.49	4.81	11.36	8.06	5.30
		33°C	15.01	11.36	3.49	14.49	11.15	3.78	13.95	10.92	4.10	13.41	10.69	4.44	12.33	10.02	4.82	11.43	9.52	5.31
		36°C	15.10	12.85	3.49	14.61	12.60	3.79	14.10	12.34	4.10	13.59	12.05	4.45	12.54	11.28	4.83	11.69	10.64	5.33
1200	16°C	21°C	12.82	8.90	3.39	12.35	8.68	3.67	11.87	8.45	3.97	11.38	8.21	4.31	10.44	7.65	4.67	9.62	7.20	5.15
		24°C	12.89	10.82	3.40	12.42	10.56	3.67	11.95	10.30	3.98	11.47	10.03	4.31	10.53	9.36	4.68	9.73	8.83	5.16
		27°C	13.09	12.40	3.41	12.67	12.08	3.69	12.24	11.74	4.00	11.80	11.38	4.34	10.90	10.54	4.71	10.16	9.84	5.20
		30°C	13.75	13.75	3.44	13.35	13.35	3.72	12.94	12.94	4.04	12.51	12.51	4.38	11.58	11.58	4.76	10.82	10.82	5.26
	19°C	24°C	14.11	8.54	3.45	13.60	8.33	3.73	13.08	8.12	4.04	12.55	7.90	4.39	11.52	7.36	4.76	10.63	6.94	5.24
		27°C	14.15	9.88	3.45	13.64	9.65	3.74	13.13	9.43	4.05	12.60	9.20	4.39	11.57	8.60	4.76	10.69	8.14	5.25
		30°C	14.27	12.16	3.46	13.76	11.89	3.74	13.27	11.62	4.06	12.76	11.33	4.40	11.75	10.58	4.77	10.91	9.98	5.26
		33°C	14.58	14.58	3.47	14.15	14.15	3.77	13.71	13.71	4.09	13.26	13.26	4.44	12.29	12.29	4.82	11.49	11.49	5.32
	22°C	27°C	15.48	8.35	3.51	14.93	8.17	3.81	14.37	7.97	4.13	13.79	7.76	4.47	12.67	7.24	4.85	11.71	6.84	5.34
		30°C	15.51	10.30	3.52	14.96	10.10	3.81	14.40	9.88	4.13	13.82	9.66	4.48	12.70	9.05	4.85	11.74	8.58	5.35
		33°C	15.57	12.07	3.52	15.03	11.86	3.81	14.48	11.61	4.13	13.91	11.35	4.48	12.80	10.64	4.86	11.85	10.10	5.36
		36°C	15.71	13.63	3.53	15.21	13.38	3.82	14.69	13.09	4.15	14.16	12.76	4.50	13.08	11.90	4.89	12.20	11.21	5.39

Remark:
AFR: Air flow rate (CFM)
EWB: Entering Wet Bulb Temp. (°C)
EDB: Entering Dry Bulb Temp. (°C)
TC: Total Cooling Capacity (kW)
SC: Sensible Cooling Capacity (kW)
PI: Power Input (kW)

Notes:
1. Ratings shown are net capacities.
2. shows nominal capacities.
3. Direct interpolation is permissible. Do not extrapolate.
4. Unit is able to operate at ambient from 19°C to 46°C DB without pressure trip.

DAIKIN_FFRN.indb 38 12/27/2012 9:28:12 AM

R410A Heatpump

Model: FFQN25CXV1 - RYN25CXV1
Cooling Mode

AFR (CFM)	EWB	EDB	Outdoor temperature																	
			19°C			25°C			30°C			35°C			40°C			46°C		
			TC	SC	PI	TC	SC	PI	TC	SC	PI	TC	SC	PI	TC	SC	PI	TC	SC	PI
330	16°C	21°C	2.62	2.08	0.68	2.53	2.03	0.74	2.43	1.97	0.80	2.34	1.92	0.87	2.15	1.78	0.94	1.98	1.68	1.04
		24°C	2.63	2.49	0.68	2.53	2.44	0.74	2.44	2.38	0.80	2.34	2.32	0.87	2.15	2.15	0.94	1.99	1.99	1.04
		27°C	2.65	2.65	0.69	2.56	2.56	0.74	2.47	2.47	0.80	2.37	2.37	0.87	2.19	2.19	0.95	2.04	2.04	1.04
		30°C	2.73	2.73	0.69	2.65	2.65	0.75	2.57	2.57	0.81	2.49	2.49	0.88	2.30	2.30	0.95	2.16	2.16	1.05
	19°C	24°C	2.89	1.94	0.69	2.79	1.89	0.75	2.69	1.84	0.81	2.58	1.79	0.88	2.37	1.67	0.96	2.19	1.57	1.06
		27°C	2.89	2.22	0.69	2.79	2.17	0.75	2.69	2.12	0.81	2.58	2.07	0.88	2.37	1.94	0.96	2.20	1.84	1.06
		30°C	2.90	2.74	0.69	2.80	2.69	0.75	2.70	2.63	0.82	2.60	2.56	0.88	2.39	2.39	0.96	2.22	2.22	1.06
		33°C	2.93	2.93	0.70	2.84	2.84	0.75	2.75	2.75	0.82	2.65	2.65	0.89	2.45	2.45	0.96	2.29	2.29	1.07
	22°C	27°C	3.18	1.90	0.71	3.07	1.86	0.77	2.96	1.81	0.83	2.84	1.76	0.90	2.61	1.64	0.98	2.42	1.55	1.08
		30°C	3.18	2.32	0.71	3.07	2.27	0.77	2.96	2.22	0.83	2.84	2.16	0.90	2.62	2.03	0.98	2.42	1.92	1.08
		33°C	3.18	2.71	0.71	3.07	2.66	0.77	2.96	2.60	0.83	2.85	2.55	0.90	2.62	2.39	0.98	2.43	2.27	1.08
		36°C	3.19	3.07	0.71	3.09	3.01	0.77	2.98	2.95	0.83	2.87	2.87	0.90	2.65	2.65	0.98	2.46	2.46	1.08
360	16°C	21°C	2.73	2.17	0.69	2.63	2.11	0.75	2.53	2.06	0.81	2.43	2.00	0.88	2.23	1.86	0.95	2.05	1.75	1.05
		24°C	2.74	2.63	0.69	2.64	2.57	0.75	2.54	2.51	0.81	2.44	2.44	0.88	2.24	2.24	0.95	2.07	2.07	1.05
		27°C	2.77	2.77	0.69	2.68	2.68	0.75	2.58	2.58	0.81	2.49	2.49	0.88	2.30	2.30	0.96	2.14	2.14	1.05
		30°C	2.88	2.88	0.70	2.80	2.80	0.75	2.72	2.72	0.82	2.63	2.63	0.89	2.43	2.43	0.97	2.27	2.27	1.07
	19°C	24°C	3.00	2.05	0.70	2.90	2.00	0.76	2.79	1.95	0.82	2.68	1.90	0.89	2.46	1.77	0.97	2.27	1.67	1.07
		27°C	3.01	2.37	0.70	2.90	2.31	0.76	2.79	2.26	0.82	2.68	2.21	0.89	2.46	2.06	0.97	2.28	1.95	1.07
		30°C	3.02	2.92	0.70	2.92	2.85	0.76	2.81	2.79	0.82	2.71	2.71	0.89	2.49	2.49	0.97	2.31	2.31	1.07
		33°C	3.07	3.07	0.70	2.98	2.98	0.76	2.89	2.89	0.83	2.79	2.79	0.90	2.58	2.58	0.98	2.42	2.42	1.08
	22°C	27°C	3.30	2.01	0.71	3.19	1.96	0.77	3.07	1.91	0.84	2.94	1.86	0.91	2.71	1.74	0.99	2.50	1.64	1.09
		30°C	3.31	2.47	0.71	3.19	2.42	0.77	3.07	2.36	0.84	2.95	2.31	0.91	2.71	2.16	0.99	2.51	2.05	1.09
		33°C	3.31	2.89	0.71	3.20	2.84	0.77	3.08	2.78	0.84	2.96	2.72	0.91	2.72	2.55	0.99	2.52	2.42	1.09
		36°C	3.33	3.27	0.72	3.22	3.21	0.78	3.11	3.11	0.84	3.00	3.00	0.91	2.77	2.77	0.99	2.58	2.58	1.09
410	16°C	21°C	2.83	2.27	0.70	2.72	2.21	0.75	2.62	2.15	0.81	2.51	2.09	0.88	2.30	1.95	0.96	2.12	1.83	1.06
		24°C	2.84	2.75	0.70	2.74	2.69	0.75	2.64	2.62	0.82	2.53	2.53	0.88	2.32	2.32	0.96	2.15	2.15	1.06
		27°C	2.89	2.89	0.70	2.79	2.79	0.76	2.70	2.70	0.82	2.60	2.60	0.89	2.41	2.41	0.97	2.24	2.24	1.07
		30°C	3.03	3.03	0.70	2.94	2.94	0.76	2.85	2.85	0.83	2.76	2.76	0.90	2.56	2.56	0.98	2.39	2.39	1.08
	19°C	24°C	3.11	2.17	0.71	3.00	2.12	0.77	2.89	2.06	0.83	2.77	2.01	0.90	2.54	1.87	0.98	2.35	1.77	1.07
		27°C	3.12	2.51	0.71	3.01	2.46	0.77	2.90	2.40	0.83	2.78	2.34	0.90	2.55	2.19	0.98	2.36	2.07	1.08
		30°C	3.15	3.09	0.71	3.04	3.03	0.77	2.93	2.93	0.83	2.82	2.82	0.90	2.59	2.59	0.98	2.41	2.41	1.08
		33°C	3.22	3.22	0.71	3.12	3.12	0.77	3.03	3.03	0.84	2.93	2.93	0.91	2.71	2.71	0.99	2.54	2.54	1.09
	22°C	27°C	3.42	2.13	0.72	3.29	2.08	0.78	3.17	2.03	0.85	3.04	1.97	0.92	2.80	1.84	0.99	2.58	1.74	1.10
		30°C	3.42	2.62	0.72	3.30	2.57	0.78	3.18	2.51	0.85	3.05	2.46	0.92	2.80	2.30	1.00	2.59	2.18	1.10
		33°C	3.43	3.07	0.72	3.32	3.02	0.78	3.19	2.95	0.85	3.07	2.89	0.92	2.82	2.71	1.00	2.62	2.57	1.10
		36°C	3.47	3.47	0.72	3.36	3.36	0.78	3.24	3.24	0.85	3.12	3.12	0.92	2.89	2.89	1.00	2.69	2.69	1.11

Model: FFQN25CXV1 - RYN25CXV1
Heating Mode

ID DB	Outdoor WB													
	-9°C		-6°C		-5°C		6°C		12°C		15°C		18°C	
	TC	SC	TC	SC	TC	SC	TC	SC	TC	SC	TC	SC	TC	SC
15°C	1.683	1.683	1.905	1.905	1.979	1.979	2.793	2.793	3.236	3.236	3.458	3.458	3.680	3.680
17°C	1.639	1.639	1.882	1.882	1.939	1.939	2.789	2.789	3.213	3.213	3.438	3.438	3.663	3.663
19°C	1.595	1.595	1.858	1.858	1.899	1.899	2.786	2.786	3.190	3.190	3.418	3.418	3.645	3.645
21°C	1.551	1.551	1.820	1.820	1.859	1.859	2.760	2.760	3.166	3.166	3.397	3.397	3.628	3.628
23°C	1.507	1.507	1.766	1.766	1.818	1.818	2.713	2.713	3.143	3.143	3.377	3.377	3.610	3.610
25°C	1.463	1.463	1.712	1.712	1.778	1.778	2.665	2.665	3.120	3.120	3.356	3.356	3.593	3.593
27°C	1.418	1.418	1.658	1.658	1.738	1.738	2.617	2.617	3.096	3.096	3.336	3.336	3.576	3.576
	Frost Region													

Remark:
AFR: Air flow rate (CFM)
EWB: Entering Wet Bulb Temp. (°C)
EDB: Entering Dry Bulb Temp. (°C)
TC: Total Cooling / Heating Capacity (kW)
SC: Sensible Cooling / Heating Capacity (kW)
PI: Power Input (kW)

Notes:
1. Ratings shown are net capacities.
2. ▒ shows nominal capacities.
3. Direct interpolation is permissible. Do not extrapolate.
4. Unit is able to operate at ambient from 19°C to 46°C DB (cooling) / -9°C to 18°C WB (heating) without pressure trip.

DAIKIN_FFRN.indb 39 12/27/2012 9:28:13 AM

Model: FFQN35CXV1- RYN35CXV1
Cooling Mode

AFR (CFM)	EWB	EDB	Outdoor temperature																	
			19°C			25°C			30°C			35°C			40°C			46°C		
			TC	SC	PI	TC	SC	PI	TC	SC	PI	TC	SC	PI	TC	SC	PI	TC	SC	PI
330	16°C	21°C	3.45	2.73	0.99	3.33	2.66	1.07	3.21	2.59	1.16	3.08	2.51	1.25	2.83	2.34	1.36	2.61	2.20	1.50
		24°C	3.46	3.27	0.99	3.33	3.20	1.07	3.21	3.12	1.16	3.08	3.04	1.26	2.83	2.83	1.36	2.62	2.62	1.50
		27°C	3.48	3.48	0.99	3.37	3.37	1.07	3.25	3.25	1.16	3.13	3.13	1.26	2.88	2.88	1.37	2.68	2.68	1.51
		30°C	3.59	3.59	0.99	3.49	3.49	1.08	3.38	3.38	1.17	3.27	3.27	1.27	3.03	3.03	1.38	2.84	2.84	1.52
	19°C	24°C	3.81	2.55	1.00	3.67	2.49	1.09	3.54	2.42	1.18	3.40	2.35	1.28	3.12	2.19	1.38	2.89	2.06	1.53
		27°C	3.81	2.92	1.00	3.68	2.85	1.09	3.54	2.79	1.18	3.40	2.72	1.28	3.13	2.54	1.39	2.89	2.41	1.53
		30°C	3.82	3.60	1.00	3.68	3.52	1.09	3.55	3.45	1.18	3.42	3.36	1.28	3.15	3.14	1.39	2.92	2.92	1.53
		33°C	3.86	3.86	1.01	3.74	3.74	1.09	3.61	3.61	1.18	3.49	3.49	1.28	3.23	3.23	1.39	3.02	3.02	1.54
	22°C	27°C	4.19	2.50	1.02	4.04	2.44	1.11	3.90	2.37	1.20	3.74	2.31	1.30	3.44	2.15	1.41	3.19	2.03	1.56
		30°C	4.19	3.04	1.02	4.04	2.98	1.11	3.90	2.91	1.20	3.74	2.84	1.30	3.44	2.66	1.41	3.19	2.52	1.56
		33°C	4.19	3.55	1.02	4.05	3.49	1.11	3.90	3.42	1.20	3.75	3.35	1.30	3.45	3.14	1.41	3.20	2.98	1.56
		36°C	4.21	4.03	1.02	4.07	3.95	1.11	3.93	3.87	1.20	3.78	3.78	1.30	3.49	3.49	1.42	3.24	3.24	1.56
360	16°C	21°C	3.59	2.85	1.00	3.46	2.77	1.08	3.33	2.70	1.17	3.19	2.62	1.27	2.93	2.44	1.37	2.70	2.30	1.51
		24°C	3.60	3.46	1.00	3.47	3.38	1.08	3.34	3.30	1.17	3.21	3.21	1.27	2.95	2.95	1.37	2.72	2.72	1.51
		27°C	3.64	3.64	1.00	3.52	3.52	1.08	3.40	3.40	1.17	3.28	3.28	1.27	3.03	3.03	1.38	2.82	2.82	1.52
		30°C	3.80	3.80	1.01	3.69	3.69	1.09	3.57	3.57	1.18	3.46	3.46	1.28	3.20	3.20	1.39	3.00	3.00	1.54
	19°C	24°C	3.96	2.69	1.01	3.81	2.63	1.10	3.67	2.56	1.19	3.52	2.49	1.29	3.24	2.32	1.40	2.99	2.19	1.54
		27°C	3.96	3.10	1.01	3.82	3.03	1.10	3.68	2.97	1.19	3.53	2.90	1.29	3.24	2.71	1.40	3.00	2.56	1.54
		30°C	3.98	3.83	1.01	3.84	3.75	1.10	3.71	3.66	1.19	3.56	3.56	1.29	3.28	3.28	1.40	3.04	3.04	1.54
		33°C	4.05	4.05	1.02	3.92	3.92	1.10	3.80	3.80	1.20	3.67	3.67	1.30	3.40	3.40	1.41	3.18	3.18	1.56
	22°C	27°C	4.35	2.64	1.03	4.19	2.58	1.12	4.04	2.51	1.21	3.88	2.44	1.31	3.56	2.28	1.42	3.30	2.15	1.57
		30°C	4.35	3.24	1.03	4.20	3.17	1.12	4.04	3.10	1.21	3.88	3.03	1.31	3.57	2.83	1.43	3.30	2.69	1.57
		33°C	4.36	3.79	1.03	4.21	3.72	1.12	4.05	3.64	1.21	3.89	3.57	1.32	3.58	3.35	1.43	3.32	3.18	1.57
		36°C	4.39	4.29	1.03	4.24	4.21	1.12	4.10	4.10	1.22	3.95	3.95	1.32	3.64	3.64	1.43	3.40	3.40	1.58
410	16°C	21°C	3.72	2.97	1.00	3.59	2.90	1.09	3.45	2.82	1.18	3.31	2.74	1.28	3.03	2.55	1.38	2.80	2.40	1.52
		24°C	3.74	3.61	1.01	3.61	3.53	1.09	3.47	3.44	1.18	3.33	3.33	1.28	3.06	3.06	1.39	2.83	2.83	1.53
		27°C	3.80	3.80	1.01	3.68	3.68	1.09	3.55	3.55	1.18	3.43	3.43	1.28	3.17	3.17	1.39	2.95	2.95	1.54
		30°C	3.99	3.99	1.02	3.88	3.88	1.10	3.76	3.76	1.20	3.63	3.63	1.30	3.36	3.36	1.41	3.14	3.14	1.56
	19°C	24°C	4.10	2.85	1.02	3.95	2.78	1.11	3.80	2.71	1.20	3.65	2.64	1.30	3.35	2.46	1.41	3.09	2.32	1.55
		27°C	4.11	3.30	1.02	3.96	3.22	1.11	3.81	3.15	1.20	3.66	3.07	1.30	3.36	2.87	1.41	3.11	2.72	1.55
		30°C	4.14	4.06	1.02	4.00	3.97	1.11	3.85	3.85	1.20	3.71	3.71	1.30	3.41	3.41	1.41	3.17	3.17	1.56
		33°C	4.23	4.23	1.03	4.11	4.11	1.12	3.98	3.98	1.21	3.85	3.85	1.31	3.57	3.57	1.43	3.34	3.34	1.58
	22°C	27°C	4.50	2.79	1.04	4.34	2.73	1.13	4.17	2.66	1.22	4.01	2.59	1.32	3.68	2.42	1.44	3.40	2.28	1.58
		30°C	4.51	3.44	1.04	4.35	3.37	1.13	4.18	3.30	1.22	4.01	3.22	1.33	3.69	3.02	1.44	3.41	2.86	1.58
		33°C	4.52	4.03	1.04	4.37	3.96	1.13	4.21	3.88	1.22	4.04	3.79	1.33	3.72	3.55	1.44	3.44	3.37	1.59
		36°C	4.56	4.55	1.04	4.42	4.42	1.13	4.27	4.27	1.23	4.11	4.11	1.33	3.80	3.80	1.45	3.55	3.55	1.60

Model: FFQN35CXV1- RYN35CXV1
Heating Mode

ID DB	Outdoor WB													
	-9°C		-6°C		-5°C		6°C		12°C		15°C		18°C	
	TC	SC	TC	SC	TC	SC	TC	SC	TC	SC	TC	SC	TC	SC
15°C	2.038	2.038	2.306	2.306	2.396	2.396	3.381	3.381	3.918	3.918	4.186	4.186	4.455	4.455
17°C	1.984	1.984	2.286	2.286	2.336	2.336	3.377	3.377	3.830	3.830	4.094	4.094	4.357	4.357
19°C	1.931	1.931	2.267	2.267	2.276	2.276	3.372	3.372	3.742	3.742	4.001	4.001	4.260	4.260
21°C	1.877	1.877	2.214	2.214	2.216	2.216	3.305	3.305	3.654	3.654	3.908	3.908	4.162	4.162
23°C	1.824	1.824	2.218	2.218	2.156	2.156	3.174	3.174	3.566	3.566	3.815	3.815	4.064	4.064
25°C	1.770	1.770	2.042	2.042	2.096	2.096	3.043	3.043	3.478	3.478	3.722	3.722	3.966	3.966
27°C	1.717	1.717	1.956	1.956	2.036	2.036	2.912	2.912	3.391	3.391	3.630	3.630	3.869	3.869
	Frost Region													

Remark:
AFR: Air flow rate (CFM)
EWB: Entering Wet Bulb Temp. (°C)
EDB: Entering Dry Bulb Temp. (°C)
TC: Total Cooling / Heating Capacity (kW)
SC: Sensible Cooling / Heating Capacity (kW)
PI: Power Input (kW)

Notes:
1. Ratings shown are net capacities.
2. shows nominal capacities.
3. Direct interpolation is permissible. Do not extrapolate.
4. Unit is able to operate at ambient from 19°C to 46°C DB (cooling) / -9°C to 18°C WB (heating) without pressure trip.

DAIKIN_FFRN.indb 40 12/27/2012 9:28:13 AM

Model: FFQN50CXV1- RYN50CXV1
Cooling Mode

AFR (CFM)	EWB	EDB	Outdoor temperature																	
			19°C			25°C			30°C			35°C			40°C			46°C		
			TC	SC	PI	TC	SC	PI	TC	SC	PI	TC	SC	PI	TC	SC	PI	TC	SC	PI
340	16°C	21°C	4.84	3.33	1.28	4.67	3.24	1.39	4.49	3.15	1.50	4.31	3.06	1.63	3.96	2.85	1.77	3.66	2.68	1.95
		24°C	4.84	3.98	1.28	4.67	3.89	1.39	4.50	3.80	1.50	4.32	3.71	1.63	3.97	3.46	1.77	3.67	3.27	1.95
		27°C	4.88	4.52	1.29	4.72	4.41	1.39	4.55	4.31	1.51	4.38	4.20	1.64	4.04	3.91	1.77	3.76	3.67	1.96
		30°C	5.03	5.03	1.29	4.89	4.89	1.40	4.74	4.74	1.52	4.59	4.59	1.65	4.25	4.25	1.79	3.98	3.98	1.98
	19°C	24°C	5.34	3.11	1.30	5.15	3.03	1.41	4.96	2.95	1.53	4.76	2.86	1.66	4.38	2.67	1.80	4.05	2.51	1.98
		27°C	5.34	3.55	1.30	5.15	3.47	1.41	4.96	3.39	1.53	4.77	3.31	1.66	4.38	3.10	1.80	4.05	2.93	1.98
		30°C	5.35	4.39	1.30	5.16	4.29	1.41	4.98	4.20	1.53	4.79	4.10	1.66	4.41	3.83	1.80	4.09	3.62	1.99
		33°C	5.41	5.41	1.31	5.23	5.23	1.42	5.06	5.06	1.54	4.89	4.89	1.67	4.53	4.53	1.81	4.23	4.23	2.00
	22°C	27°C	5.87	3.04	1.33	5.67	2.97	1.44	5.46	2.89	1.56	5.25	2.81	1.69	4.82	2.62	1.84	4.47	2.47	2.02
		30°C	5.87	3.70	1.33	5.67	3.63	1.44	5.46	3.54	1.56	5.25	3.46	1.69	4.83	3.24	1.84	4.47	3.07	2.02
		33°C	5.87	4.33	1.33	5.67	4.24	1.44	5.46	4.16	1.56	5.25	4.07	1.69	4.83	3.82	1.84	4.48	3.63	2.02
		36°C	5.89	4.91	1.33	5.70	4.81	1.44	5.50	4.71	1.56	5.30	4.60	1.70	4.89	4.32	1.84	4.55	4.10	2.03
410	16°C	21°C	5.03	3.47	1.30	4.85	3.38	1.40	4.67	3.29	1.52	4.48	3.20	1.65	4.11	2.98	1.78	3.79	2.80	1.97
		24°C	5.05	4.21	1.30	4.87	4.11	1.40	4.68	4.01	1.52	4.50	3.91	1.65	4.13	3.65	1.79	3.82	3.45	1.97
		27°C	5.11	4.78	1.30	4.94	4.67	1.41	4.77	4.55	1.52	4.60	4.42	1.65	4.24	4.10	1.79	3.95	3.84	1.98
		30°C	5.32	5.32	1.31	5.17	5.17	1.42	5.01	5.01	1.54	4.85	4.85	1.67	4.49	4.49	1.81	4.20	4.20	2.00
	19°C	24°C	5.54	3.28	1.32	5.35	3.20	1.43	5.15	3.12	1.54	4.94	3.03	1.67	4.54	2.82	1.82	4.19	2.66	2.00
		27°C	5.55	3.78	1.32	5.36	3.70	1.43	5.16	3.61	1.54	4.95	3.53	1.68	4.55	3.30	1.82	4.20	3.12	2.00
		30°C	5.58	4.66	1.32	5.39	4.56	1.43	5.19	4.46	1.55	5.00	4.35	1.68	4.60	4.07	1.82	4.27	3.84	2.01
		33°C	5.67	5.67	1.32	5.50	5.50	1.43	5.33	5.33	1.56	5.15	5.15	1.69	4.77	4.77	1.83	4.46	4.46	2.03
	22°C	27°C	6.09	3.21	1.34	5.88	3.14	1.45	5.66	3.06	1.57	5.43	2.98	1.71	4.99	2.78	1.85	4.62	2.62	2.04
		30°C	6.10	3.94	1.34	5.88	3.86	1.45	5.67	3.78	1.58	5.44	3.69	1.71	5.00	3.45	1.85	4.63	3.28	2.04
		33°C	6.11	4.62	1.34	5.90	4.53	1.45	5.68	4.44	1.58	5.46	4.35	1.71	5.02	4.08	1.85	4.65	3.87	2.04
		36°C	6.15	5.22	1.34	5.95	5.13	1.46	5.74	5.02	1.58	5.53	4.90	1.71	5.11	4.59	1.86	4.76	4.33	2.05
450	16°C	21°C	5.22	3.62	1.31	5.03	3.53	1.41	4.83	3.44	1.53	4.63	3.34	1.66	4.25	3.11	1.80	3.92	2.93	1.98
		24°C	5.25	4.40	1.31	5.06	4.29	1.41	4.87	4.19	1.53	4.67	4.08	1.66	4.29	3.81	1.80	3.96	3.59	1.99
		27°C	5.33	5.04	1.31	5.16	4.91	1.42	4.98	4.77	1.54	4.80	4.63	1.67	4.44	4.29	1.81	4.14	4.00	2.00
		30°C	5.60	5.60	1.32	5.43	5.43	1.43	5.27	5.27	1.55	5.09	5.09	1.69	4.72	4.72	1.83	4.40	4.40	2.02
	19°C	24°C	5.74	3.47	1.33	5.54	3.39	1.44	5.33	3.30	1.56	5.11	3.21	1.69	4.69	2.99	1.83	4.33	2.82	2.02
		27°C	5.76	4.02	1.33	5.55	3.93	1.44	5.35	3.83	1.56	5.13	3.74	1.69	4.71	3.50	1.83	4.35	3.31	2.02
		30°C	5.81	4.94	1.33	5.60	4.84	1.44	5.40	4.73	1.56	5.20	4.61	1.69	4.78	4.30	1.84	4.44	4.06	2.03
		33°C	5.93	5.93	1.34	5.76	5.76	1.45	5.58	5.58	1.57	5.40	5.40	1.71	5.00	5.00	1.86	4.68	4.68	2.05
	22°C	27°C	6.30	3.40	1.35	6.08	3.32	1.47	5.85	3.24	1.59	5.62	3.15	1.72	5.16	2.94	1.87	4.77	2.78	2.06
		30°C	6.32	4.19	1.35	6.09	4.11	1.47	5.86	4.02	1.59	5.63	3.93	1.72	5.17	3.68	1.87	4.78	3.49	2.06
		33°C	6.34	4.91	1.35	6.12	4.82	1.47	5.89	4.72	1.59	5.66	4.62	1.73	5.21	4.33	1.87	4.83	4.11	2.06
		36°C	6.39	5.54	1.36	6.19	5.44	1.47	5.98	5.32	1.60	5.77	5.19	1.73	5.33	4.84	1.88	4.97	4.56	2.08

Model: FFQN50CXV1- RYN50CXV1
Heating Mode

ID DB	Outdoor WB													
	-9°C		-6°C		-5°C		6°C		12°C		15°C		18°C	
	TC	SC	TC	SC	TC	SC	TC	SC	TC	SC	TC	SC	TC	SC
15°C	3.101	3.101	3.509	3.509	3.646	3.646	5.144	5.144	5.962	5.962	6.371	6.371	6.779	6.779
17°C	3.019	3.019	3.395	3.395	3.566	3.566	5.138	5.138	5.889	5.889	6.299	6.299	6.709	6.709
19°C	2.938	2.938	3.281	3.281	3.486	3.486	5.132	5.132	5.817	5.817	6.228	6.228	6.639	6.639
21°C	2.857	2.857	3.196	3.196	3.407	3.407	5.067	5.067	5.745	5.745	6.157	6.157	6.570	6.570
23°C	2.775	2.775	3.140	3.140	3.327	3.327	4.943	4.943	5.672	5.672	6.086	6.086	6.500	6.500
25°C	2.694	2.694	3.085	3.085	3.248	3.248	4.819	4.819	5.600	5.600	6.015	6.015	6.430	6.430
27°C	2.613	2.613	3.029	3.029	3.168	3.168	4.695	4.695	5.527	5.527	5.944	5.944	6.360	6.360
	Frost Region													

Remark:
AFR: Air flow rate (CFM)
EWB: Entering Wet Bulb Temp. (°C)
EDB: Entering Dry Bulb Temp. (°C)
TC: Total Cooling / Heating Capacity (kW)
SC: Sensible Cooling / Heating Capacity (kW)
PI: Power Input (kW)

Notes:
1. Ratings shown are net capacities.
2. ▒ shows nominal capacities.
3. Direct interpolation is permissible. Do not extrapolate.
4. Unit is able to operate at ambient from 19°C to 46°C DB (cooling) / -9°C to 18°C WB (heating) without pressure trip.

DAIKIN_FFRN.indb 41 12/27/2012 9:28:13 AM

Model: FFQN50CXV1- RYN50CXV1
Cooling Mode

AFR (CFM)	EWB	EDB	Outdoor temperature																	
			19°C			25°C			30°C			35°C			40°C			46°C		
			TC	SC	PI	TC	SC	PI	TC	SC	PI	TC	SC	PI	TC	SC	PI	TC	SC	PI
340	16°C	21°C	4.98	3.42	1.31	4.80	3.34	1.42	4.62	3.25	1.53	4.44	3.15	1.66	4.08	2.93	1.80	3.76	2.76	1.99
		24°C	4.99	4.10	1.31	4.81	4.01	1.42	4.63	3.91	1.53	4.44	3.82	1.66	4.08	3.56	1.81	3.78	3.36	1.99
		27°C	5.02	4.65	1.31	4.86	4.54	1.42	4.69	4.44	1.54	4.51	4.32	1.67	4.16	4.02	1.81	3.87	3.78	2.00
		30°C	5.18	5.18	1.32	5.03	5.03	1.43	4.88	4.88	1.55	4.72	4.72	1.68	4.38	4.38	1.83	4.09	4.09	2.02
	19°C	24°C	5.49	3.20	1.33	5.30	3.12	1.44	5.10	3.03	1.56	4.90	2.95	1.69	4.51	2.75	1.84	4.16	2.59	2.02
		27°C	5.49	3.66	1.33	5.30	3.58	1.44	5.11	3.49	1.56	4.91	3.41	1.69	4.51	3.19	1.84	4.17	3.02	2.02
		30°C	5.50	4.51	1.33	5.31	4.42	1.44	5.13	4.32	1.56	4.93	4.22	1.69	4.54	3.94	1.84	4.21	3.73	2.03
		33°C	5.57	5.57	1.33	5.39	5.39	1.45	5.21	5.21	1.57	5.03	5.03	1.70	4.66	4.66	1.85	4.36	4.36	2.04
	22°C	27°C	6.04	3.13	1.35	5.83	3.05	1.47	5.62	2.98	1.59	5.40	2.90	1.73	4.97	2.70	1.87	4.60	2.54	2.06
		30°C	6.04	3.81	1.35	5.83	3.73	1.47	5.62	3.65	1.59	5.40	3.56	1.73	4.97	3.33	1.87	4.60	3.16	2.06
		33°C	6.05	4.45	1.35	5.84	4.37	1.47	5.62	4.28	1.59	5.41	4.19	1.73	4.97	3.94	1.87	4.61	3.74	2.06
		36°C	6.07	5.05	1.36	5.87	4.95	1.47	5.66	4.85	1.59	5.46	4.74	1.73	5.03	4.44	1.88	4.68	4.22	2.07
410	16°C	21°C	5.18	3.57	1.32	4.99	3.48	1.43	4.80	3.39	1.55	4.61	3.29	1.68	4.23	3.07	1.82	3.90	2.88	2.01
		24°C	5.20	4.34	1.32	5.01	4.23	1.43	4.82	4.13	1.55	4.63	4.03	1.68	4.25	3.76	1.82	3.93	3.55	2.01
		27°C	5.26	4.92	1.33	5.08	4.81	1.43	4.91	4.69	1.55	4.73	4.55	1.69	4.37	4.22	1.83	4.07	3.95	2.02
		30°C	5.48	5.48	1.33	5.32	5.32	1.45	5.16	5.16	1.57	4.99	4.99	1.70	4.62	4.62	1.85	4.32	4.32	2.04
	19°C	24°C	5.71	3.38	1.34	5.50	3.29	1.45	5.30	3.21	1.58	5.08	3.12	1.71	4.67	2.91	1.85	4.31	2.74	2.04
		27°C	5.72	3.89	1.34	5.51	3.81	1.45	5.31	3.72	1.58	5.09	3.63	1.71	4.68	3.40	1.85	4.33	3.21	2.04
		30°C	5.74	4.80	1.35	5.54	4.70	1.46	5.35	4.59	1.58	5.14	4.48	1.71	4.73	4.19	1.86	4.39	3.96	2.05
		33°C	5.84	5.84	1.35	5.66	5.66	1.46	5.48	5.48	1.59	5.30	5.30	1.72	4.91	4.91	1.87	4.59	4.59	2.07
	22°C	27°C	6.27	3.31	1.37	6.05	3.23	1.48	5.82	3.15	1.61	5.59	3.06	1.74	5.14	2.86	1.89	4.75	2.70	2.08
		30°C	6.28	4.06	1.37	6.06	3.98	1.48	5.83	3.89	1.61	5.60	3.80	1.74	5.15	3.56	1.89	4.76	3.37	2.08
		33°C	6.29	4.76	1.37	6.07	4.67	1.48	5.85	4.57	1.61	5.62	4.47	1.74	5.17	4.20	1.89	4.79	3.98	2.08
		36°C	6.33	5.38	1.37	6.12	5.28	1.49	5.91	5.17	1.61	5.70	5.05	1.75	5.25	4.72	1.90	4.90	4.45	2.09
450	16°C	21°C	5.37	3.73	1.33	5.17	3.63	1.44	4.98	3.54	1.56	4.77	3.44	1.69	4.37	3.20	1.83	4.03	3.01	2.02
		24°C	5.40	4.53	1.33	5.20	4.42	1.44	5.01	4.31	1.56	4.81	4.20	1.69	4.41	3.92	1.84	4.08	3.70	2.03
		27°C	5.49	5.19	1.34	5.31	5.06	1.45	5.13	4.91	1.57	4.94	4.76	1.70	4.57	4.41	1.85	4.26	4.12	2.04
		30°C	5.76	5.76	1.35	5.59	5.59	1.46	5.42	5.42	1.59	5.24	5.24	1.72	4.85	4.85	1.87	4.53	4.53	2.06
	19°C	24°C	5.91	3.57	1.35	5.70	3.49	1.47	5.48	3.40	1.59	5.26	3.30	1.72	4.83	3.08	1.87	4.46	2.91	2.06
		27°C	5.93	4.14	1.36	5.72	4.04	1.47	5.50	3.95	1.59	5.28	3.85	1.72	4.85	3.60	1.87	4.48	3.41	2.06
		30°C	5.98	5.09	1.36	5.77	4.98	1.47	5.56	4.86	1.59	5.35	4.74	1.73	4.92	4.43	1.88	4.57	4.18	2.07
		33°C	6.11	6.11	1.36	5.93	5.93	1.48	5.75	5.75	1.60	5.56	5.56	1.74	5.15	5.15	1.89	4.81	4.81	2.09
	22°C	27°C	6.49	3.50	1.38	6.26	3.42	1.49	6.02	3.33	1.62	5.78	3.25	1.76	5.31	3.03	1.90	4.91	2.86	2.10
		30°C	6.50	4.31	1.38	6.27	4.23	1.50	6.03	4.14	1.62	5.79	4.04	1.76	5.32	3.79	1.91	4.92	3.59	2.10
		33°C	6.52	5.05	1.38	6.30	4.96	1.50	6.07	4.86	1.62	5.83	4.75	1.76	5.36	4.45	1.91	4.97	4.23	2.10
		36°C	6.58	5.70	1.39	6.38	5.60	1.50	6.16	5.48	1.63	5.93	5.34	1.77	5.48	4.98	1.92	5.11	4.69	2.12

Model: FFQN50CXV1- RYN50CXV1
Heating Mode

ID DB	Outdoor WB													
	-9°C		-6°C		-5°C		6°C		12°C		15°C		18°C	
	TC	SC	TC	SC	TC	SC	TC	SC	TC	SC	TC	SC	TC	SC
15°C	3.278	3.278	3.710	3.710	3.854	3.854	5.438	5.438	6.302	6.302	6.735	6.735	7.167	7.167
17°C	3.192	3.192	3.680	3.680	3.770	3.770	5.432	5.432	6.228	6.228	6.662	6.662	7.096	7.096
19°C	3.106	3.106	3.649	3.649	3.686	3.686	5.425	5.425	6.154	6.154	6.589	6.589	7.025	7.025
21°C	3.020	3.020	3.573	3.573	3.603	3.603	5.358	5.358	6.080	6.080	6.517	6.517	6.954	6.954
23°C	2.934	2.934	3.450	3.450	3.519	3.519	5.229	5.229	6.005	6.005	6.444	6.444	6.883	6.883
25°C	2.848	2.848	3.327	3.327	3.435	3.435	5.101	5.101	5.931	5.931	6.371	6.371	6.812	6.812
27°C	2.762	2.762	3.204	3.204	3.352	3.352	4.973	4.973	5.857	5.857	6.299	6.299	6.741	6.741
	Frost Region													

Remark:
AFR: Air flow rate (CFM)
EWB: Entering Wet Bulb Temp. (°C)
EDB: Entering Dry Bulb Temp. (°C)
TC: Total Cooling / Heating Capacity (kW)
SC: Sensible Cooling / Heating Capacity (kW)
PI: Power Input (kW)

Notes:
1. Ratings shown are net capacities.
2. ▒ shows nominal capacities.
3. Direct interpolation is permissible. Do not extrapolate.
4. Unit is able to operate at ambient from 19°C to 46°C DB (cooling) / -9°C to 18°C WB (heating) without pressure trip.

DAIKIN_FFRN.indb 42 12/27/2012 9:28:13 AM

Model: FCQN50EXV1 - RYN50CXV1
Cooling Mode

AFR (CFM)	EWB	EDB	Outdoor temperature																	
			19°C			25°C			30°C			35°C			40°C			46°C		
			TC	SC	PI	TC	SC	PI	TC	SC	PI	TC	SC	PI	TC	SC	PI	TC	SC	PI
430	16°C	21°C	5.05	3.81	1.32	4.87	3.71	1.43	4.69	3.61	1.55	4.50	3.51	1.68	4.14	3.27	1.82	3.82	3.07	2.01
		24°C	5.06	4.57	1.32	4.88	4.46	1.43	4.70	4.36	1.55	4.51	4.25	1.68	4.14	3.97	1.82	3.83	3.74	2.01
		27°C	5.10	5.10	1.32	4.93	4.93	1.43	4.76	4.76	1.55	4.58	4.58	1.68	4.22	4.22	1.83	3.93	3.93	2.02
		30°C	5.26	5.26	1.33	5.11	5.11	1.44	4.95	4.95	1.56	4.79	4.79	1.70	4.44	4.44	1.84	4.16	4.16	2.04
	19°C	24°C	5.57	3.56	1.34	5.38	3.47	1.45	5.18	3.38	1.58	4.98	3.28	1.71	4.57	3.06	1.85	4.23	2.88	2.04
		27°C	5.58	4.07	1.34	5.38	3.98	1.45	5.18	3.89	1.58	4.98	3.80	1.71	4.58	3.55	1.85	4.23	3.36	2.04
		30°C	5.59	5.03	1.34	5.39	4.92	1.45	5.20	4.81	1.58	5.01	4.69	1.71	4.61	4.39	1.86	4.28	4.15	2.05
		33°C	5.65	5.65	1.35	5.47	5.47	1.46	5.29	5.29	1.58	5.11	5.11	1.72	4.73	4.73	1.86	4.42	4.42	2.06
	22°C	27°C	6.13	3.48	1.37	5.92	3.40	1.48	5.70	3.32	1.61	5.48	3.22	1.74	5.04	3.00	1.89	4.67	2.83	2.08
		30°C	6.13	4.25	1.37	5.92	4.16	1.48	5.70	4.06	1.61	5.48	3.97	1.74	5.04	3.71	1.89	4.67	3.52	2.08
		33°C	6.14	4.96	1.37	5.92	4.87	1.48	5.71	4.77	1.61	5.49	4.67	1.74	5.05	4.38	1.89	4.68	4.16	2.08
		36°C	6.16	5.62	1.37	5.95	5.51	1.48	5.75	5.40	1.61	5.54	5.28	1.75	5.11	4.95	1.89	4.75	4.69	2.09
530	16°C	21°C	5.26	3.98	1.33	5.07	3.88	1.44	4.88	3.77	1.56	4.68	3.67	1.69	4.29	3.41	1.84	3.96	3.21	2.03
		24°C	5.27	4.83	1.33	5.08	4.72	1.44	4.89	4.60	1.56	4.70	4.49	1.70	4.31	4.19	1.84	3.99	3.95	2.03
		27°C	5.34	5.34	1.34	5.16	5.16	1.45	4.98	4.98	1.57	4.80	4.80	1.70	4.43	4.43	1.85	4.13	4.13	2.04
		30°C	5.56	5.56	1.35	5.40	5.40	1.46	5.23	5.23	1.58	5.06	5.06	1.72	4.69	4.69	1.87	4.39	4.39	2.06
	19°C	24°C	5.79	3.76	1.36	5.59	3.67	1.47	5.38	3.57	1.59	5.16	3.47	1.72	4.74	3.24	1.87	4.38	3.05	2.06
		27°C	5.80	4.33	1.36	5.60	4.24	1.47	5.39	4.14	1.59	5.17	4.04	1.72	4.75	3.78	1.87	4.39	3.58	2.06
		30°C	5.83	5.35	1.36	5.63	5.23	1.47	5.43	5.11	1.59	5.22	4.99	1.73	4.81	4.67	1.87	4.46	4.41	2.07
		33°C	5.93	5.93	1.36	5.75	5.75	1.48	5.56	5.56	1.60	5.38	5.38	1.74	4.98	4.98	1.89	4.66	4.66	2.09
	22°C	27°C	6.37	3.68	1.38	6.14	3.60	1.50	5.91	3.51	1.62	5.68	3.41	1.76	5.22	3.18	1.91	4.83	3.00	2.10
		30°C	6.37	4.52	1.38	6.15	4.43	1.50	5.92	4.33	1.62	5.68	4.23	1.76	5.22	3.96	1.91	4.83	3.76	2.10
		33°C	6.38	5.30	1.38	6.16	5.20	1.50	5.94	5.09	1.62	5.70	4.98	1.76	5.25	4.67	1.91	4.86	4.44	2.10
		36°C	6.42	5.99	1.38	6.22	5.88	1.50	6.00	5.75	1.63	5.78	5.62	1.77	5.33	5.26	1.92	4.97	4.96	2.11
600	16°C	21°C	5.45	4.15	1.34	5.25	4.05	1.45	5.05	3.94	1.57	4.84	3.83	1.71	4.44	3.57	1.85	4.09	3.36	2.04
		24°C	5.48	5.04	1.35	5.28	4.92	1.46	5.08	4.80	1.58	4.88	4.68	1.71	4.48	4.36	1.85	4.14	4.12	2.04
		27°C	5.57	5.57	1.35	5.39	5.39	1.46	5.21	5.21	1.58	5.02	5.02	1.72	4.64	4.64	1.87	4.32	4.32	2.06
		30°C	5.85	5.85	1.36	5.68	5.68	1.48	5.50	5.50	1.60	5.32	5.32	1.74	4.93	4.93	1.89	4.60	4.60	2.08
	19°C	24°C	6.00	3.98	1.37	5.78	3.88	1.48	5.57	3.78	1.60	5.34	3.68	1.74	4.90	3.43	1.89	4.52	3.24	2.08
		27°C	6.02	4.61	1.37	5.80	4.50	1.48	5.59	4.40	1.60	5.36	4.29	1.74	4.92	4.01	1.89	4.55	3.79	2.08
		30°C	6.07	5.67	1.37	5.85	5.55	1.48	5.64	5.42	1.61	5.43	5.28	1.74	5.00	4.93	1.89	4.64	4.64	2.09
		33°C	6.20	6.20	1.38	6.02	6.02	1.49	5.83	5.83	1.62	5.64	5.64	1.76	5.23	5.23	1.91	4.89	4.89	2.11
	22°C	27°C	6.59	3.89	1.39	6.35	3.81	1.51	6.11	3.71	1.64	5.87	3.62	1.77	5.39	3.37	1.92	4.98	3.19	2.12
		30°C	6.60	4.80	1.39	6.36	4.71	1.51	6.13	4.61	1.64	5.88	4.50	1.77	5.40	4.22	1.92	5.00	4.00	2.12
		33°C	6.62	5.63	1.39	6.39	5.53	1.51	6.16	5.41	1.64	5.92	5.29	1.78	5.44	4.96	1.93	5.04	4.71	2.12
		36°C	6.68	6.35	1.40	6.47	6.24	1.52	6.25	6.10	1.64	6.02	5.95	1.78	5.57	5.55	1.94	5.19	5.19	2.14

Model: FCQN50EXV1 - RYN50CXV1
Heating Mode

ID DB	Outdoor WB													
	-9°C		-6°C		-5°C		6°C		12°C		15°C		18°C	
	TC	SC	TC	SC	TC	SC	TC	SC	TC	SC	TC	SC	TC	SC
15°C	3.075	3.075	3.481	3.481	3.616	3.616	5.103	5.103	5.913	5.913	6.319	6.319	6.724	6.724
17°C	2.995	2.995	3.475	3.475	3.538	3.538	5.096	5.096	5.847	5.847	6.255	6.255	6.662	6.662
19°C	2.914	2.914	3.470	3.470	3.460	3.460	5.090	5.090	5.781	5.781	6.191	6.191	6.601	6.601
21°C	2.834	2.834	3.402	3.402	3.382	3.382	5.029	5.029	5.715	5.715	6.127	6.127	6.539	6.539
23°C	2.753	2.753	3.271	3.271	3.305	3.305	4.913	4.913	5.649	5.649	6.063	6.063	6.477	6.477
25°C	2.672	2.672	3.140	3.140	3.227	3.227	4.797	4.797	5.583	5.583	5.999	5.999	6.415	6.415
27°C	2.592	2.592	3.010	3.010	3.149	3.149	4.682	4.682	5.518	5.518	5.935	5.935	6.353	6.353
	Frost Region													

Remark:
AFR: Air flow rate (CFM)
EWB: Entering Wet Bulb Temp. (°C)
EDB: Entering Dry Bulb Temp. (°C)
TC: Total Cooling / Heating Capacity (kW)
SC: Sensible Cooling / Heating Capacity (kW)
PI: Power Input (kW)

Notes:
1. Ratings shown are net capacities.
2. shows nominal capacities.
3. Direct interpolation is permissible. Do not extrapolate.
4. Unit is able to operate at ambient from 19°C to 46°C DB (cooling) / -9°C to 18°C WB (heating) without pressure trip.

DAIKIN_FFRN.indb 43 12/27/2012 9:28:13 AM

Model: FCQN60EXV1 - RYN60CXV1
Cooling Mode

AFR (CFM)	EWB	EDB	Outdoor temperature																	
			19°C			25°C			30°C			35°C			40°C			46°C		
			TC	SC	PI	TC	SC	PI	TC	SC	PI	TC	SC	PI	TC	SC	PI	TC	SC	PI
530	16°C	21°C	6.14	4.34	1.47	5.92	4.23	1.59	5.70	4.11	1.73	5.47	4.00	1.87	5.03	3.72	2.03	4.64	3.50	2.24
		24°C	6.15	5.20	1.47	5.93	5.08	1.59	5.71	4.96	1.73	5.48	4.84	1.87	5.04	4.52	2.03	4.66	4.26	2.24
		27°C	6.20	5.89	1.48	5.99	5.76	1.60	5.78	5.62	1.73	5.56	5.48	1.88	5.13	5.10	2.04	4.77	4.77	2.25
		30°C	6.39	6.39	1.48	6.20	6.20	1.61	6.01	6.01	1.74	5.82	5.82	1.89	5.40	5.40	2.06	5.05	5.05	2.27
	19°C	24°C	6.77	4.05	1.50	6.53	3.95	1.62	6.29	3.85	1.76	6.04	3.74	1.90	5.56	3.48	2.07	5.14	3.28	2.28
		27°C	6.78	4.64	1.50	6.54	4.53	1.62	6.30	4.43	1.76	6.05	4.32	1.91	5.56	4.04	2.07	5.14	3.83	2.28
		30°C	6.79	5.72	1.50	6.55	5.60	1.62	6.32	5.48	1.76	6.08	5.34	1.91	5.60	5.00	2.07	5.19	4.73	2.28
		33°C	6.87	6.87	1.50	6.64	6.64	1.63	6.43	6.43	1.76	6.21	6.21	1.91	5.74	5.74	2.08	5.37	5.37	2.30
	22°C	27°C	7.45	3.97	1.52	7.19	3.87	1.65	6.93	3.77	1.79	6.66	3.67	1.94	6.12	3.42	2.11	5.67	3.22	2.32
		30°C	7.45	4.83	1.52	7.19	4.73	1.65	6.93	4.62	1.79	6.66	4.51	1.94	6.12	4.23	2.11	5.67	4.01	2.32
		33°C	7.46	5.65	1.52	7.20	5.54	1.65	6.94	5.43	1.79	6.66	5.32	1.94	6.13	4.99	2.11	5.68	4.74	2.32
		36°C	7.48	6.40	1.53	7.23	6.27	1.65	6.98	6.14	1.79	6.73	6.01	1.95	6.20	5.63	2.11	5.77	5.34	2.33
600	16°C	21°C	6.39	4.53	1.49	6.16	4.41	1.61	5.92	4.29	1.74	5.68	4.17	1.89	5.21	3.88	2.05	4.81	3.66	2.26
		24°C	6.41	5.50	1.49	6.18	5.37	1.61	5.94	5.24	1.74	5.70	5.11	1.89	5.24	4.76	2.05	4.84	4.50	2.26
		27°C	6.48	6.24	1.49	6.27	6.10	1.61	6.05	5.94	1.75	5.83	5.76	1.90	5.38	5.35	2.06	5.02	5.01	2.27
		30°C	6.75	6.75	1.50	6.56	6.56	1.63	6.36	6.36	1.76	6.15	6.15	1.92	5.70	5.70	2.08	5.33	5.33	2.30
	19°C	24°C	7.04	4.28	1.51	6.79	4.18	1.64	6.53	4.07	1.77	6.27	3.95	1.92	5.76	3.69	2.08	5.32	3.47	2.30
		27°C	7.05	4.93	1.51	6.80	4.82	1.64	6.54	4.71	1.77	6.28	4.60	1.92	5.77	4.30	2.09	5.33	4.07	2.30
		30°C	7.08	6.09	1.51	6.84	5.95	1.64	6.59	5.82	1.78	6.34	5.68	1.93	5.84	5.31	2.09	5.41	5.02	2.30
		33°C	7.20	7.20	1.52	6.98	6.98	1.65	6.76	6.76	1.79	6.53	6.53	1.94	6.05	6.05	2.11	5.66	5.66	2.32
	22°C	27°C	7.73	4.19	1.54	7.46	4.09	1.67	7.18	3.99	1.81	6.90	3.88	1.96	6.34	3.62	2.13	5.86	3.42	2.34
		30°C	7.74	5.15	1.54	7.47	5.04	1.67	7.19	4.93	1.81	6.90	4.81	1.96	6.35	4.51	2.13	5.87	4.28	2.34
		33°C	7.75	6.03	1.54	7.48	5.91	1.67	7.21	5.79	1.81	6.93	5.67	1.96	6.37	5.32	2.13	5.91	5.05	2.35
		36°C	7.80	6.82	1.54	7.55	6.69	1.67	7.29	6.55	1.81	7.02	6.40	1.97	6.48	5.98	2.14	6.04	5.65	2.36
680	16°C	21°C	6.62	4.72	1.50	6.38	4.60	1.62	6.14	4.48	1.76	5.88	4.36	1.90	5.39	4.06	2.06	4.97	3.82	2.28
		24°C	6.66	5.74	1.50	6.42	5.60	1.62	6.17	5.47	1.76	5.92	5.32	1.91	5.44	4.97	2.07	5.03	4.68	2.28
		27°C	6.76	6.58	1.51	6.54	6.41	1.63	6.32	6.23	1.77	6.10	6.04	1.92	5.63	5.59	2.08	5.25	5.22	2.30
		30°C	7.10	7.10	1.52	6.90	6.90	1.65	6.68	6.68	1.78	6.46	6.46	1.94	5.98	5.98	2.10	5.59	5.59	2.32
	19°C	24°C	7.29	4.53	1.52	7.03	4.42	1.65	6.76	4.31	1.79	6.48	4.19	1.94	5.95	3.91	2.10	5.49	3.68	2.32
		27°C	7.31	5.24	1.53	7.05	5.12	1.65	6.78	5.00	1.79	6.51	4.88	1.94	5.98	4.56	2.10	5.52	4.32	2.32
		30°C	7.37	6.45	1.53	7.11	6.31	1.65	6.86	6.17	1.79	6.59	6.01	1.94	6.07	5.61	2.11	5.64	5.29	2.33
		33°C	7.53	7.53	1.54	7.31	7.31	1.66	7.09	7.09	1.81	6.85	6.85	1.96	6.35	6.35	2.13	5.94	5.94	2.35
	22°C	27°C	8.00	4.43	1.55	7.71	4.34	1.68	7.42	4.23	1.82	7.13	4.12	1.98	6.55	3.84	2.14	6.05	3.63	2.36
		30°C	8.02	5.46	1.55	7.73	5.36	1.68	7.44	5.24	1.82	7.14	5.12	1.98	6.56	4.80	2.15	6.07	4.55	2.36
		33°C	8.04	6.40	1.56	7.77	6.29	1.69	7.48	6.16	1.83	7.19	6.02	1.98	6.61	5.65	2.15	6.12	5.36	2.37
		36°C	8.11	7.23	1.56	7.86	7.10	1.69	7.59	6.94	1.83	7.32	6.77	1.99	6.76	6.32	2.16	6.31	5.95	2.38

Model: FCQN60EXV1 - RYN60CXV1
Heating Mode

ID DB	Outdoor WB													
	-9°C		-6°C		-5°C		6°C		12°C		15°C		18°C	
	TC	SC	TC	SC	TC	SC	TC	SC	TC	SC	TC	SC	TC	SC
15°C	3.497	3.497	3.958	3.958	4.112	4.112	5.802	5.802	6.724	6.724	7.185	7.185	7.646	7.646
17°C	3.405	3.405	4.080	4.080	4.016	4.016	5.795	5.795	6.613	6.613	7.071	7.071	7.529	7.529
19°C	3.314	3.314	4.201	4.201	3.921	3.921	5.788	5.788	6.501	6.501	6.956	6.956	7.412	7.412
21°C	3.222	3.222	4.138	4.138	3.825	3.825	5.697	5.697	6.389	6.389	6.842	6.842	7.294	7.294
23°C	3.130	3.130	3.889	3.889	3.730	3.730	5.520	5.520	6.278	6.278	6.727	6.727	7.177	7.177
25°C	3.039	3.039	3.640	3.640	3.634	3.634	5.343	5.343	6.166	6.166	6.613	6.613	7.060	7.060
27°C	2.947	2.947	3.391	3.391	3.539	3.539	5.167	5.167	6.055	6.055	6.498	6.498	6.942	6.942
	Frost Region													

Remark:
AFR: Air flow rate (CFM)
EWB: Entering Wet Bulb Temp. (°C)
EDB: Entering Dry Bulb Temp. (°C)
TC: Total Cooling / Heating Capacity (kW)
SC: Sensible Cooling / Heating Capacity (kW)
PI: Power Input (kW)

Notes:
1. Ratings shown are net capacities.
2. shows nominal capacities.
3. Direct interpolation is permissible. Do not extrapolate.
4. Unit is able to operate at ambient from 19°C to 46°C DB (cooling) / -9°C to 18°C WB (heating) without pressure trip.

DAIKIN_FFRN.indb 44 12/27/2012 9:28:14 AM

Model: FCQN71EXV1 - RQ71CXV1
Cooling Mode

AFR (CFM)	EWB	EDB	Outdoor temperature																	
			19°C			25°C			30°C			35°C			40°C			46°C		
			TC	SC	PI	TC	SC	PI	TC	SC	PI	TC	SC	PI	TC	SC	PI	TC	SC	PI
620	16°C	21°C	7.46	5.49	2.12	7.19	5.34	2.29	6.93	5.20	2.48	6.65	5.05	2.69	6.10	4.70	2.92	5.64	4.42	3.22
		24°C	7.47	6.57	2.12	7.20	6.42	2.29	6.94	6.27	2.48	6.66	6.11	2.69	6.12	5.71	2.92	5.66	5.39	3.22
		27°C	7.53	7.45	2.12	7.28	7.28	2.30	7.02	7.02	2.49	6.76	6.76	2.70	6.23	6.23	2.93	5.80	5.80	3.23
		30°C	7.76	7.76	2.13	7.54	7.54	2.31	7.31	7.31	2.51	7.07	7.07	2.72	6.55	6.55	2.96	6.13	6.13	3.26
	19°C	24°C	8.23	5.12	2.15	7.94	4.99	2.33	7.65	4.86	2.53	7.34	4.72	2.74	6.75	4.40	2.97	6.24	4.14	3.28
		27°C	8.23	5.86	2.15	7.94	5.73	2.33	7.65	5.60	2.53	7.35	5.46	2.74	6.76	5.11	2.97	6.25	4.84	3.28
		30°C	8.24	7.23	2.15	7.96	7.08	2.33	7.68	6.92	2.53	7.39	6.76	2.74	6.80	6.32	2.98	6.31	5.98	3.28
		33°C	8.34	8.34	2.16	8.07	8.07	2.34	7.81	7.81	2.54	7.54	7.54	2.75	6.98	6.98	2.99	6.52	6.52	3.30
	22°C	27°C	9.05	5.01	2.19	8.74	4.89	2.38	8.42	4.77	2.57	8.09	4.64	2.79	7.44	4.32	3.03	6.89	4.08	3.34
		30°C	9.05	6.11	2.19	8.74	5.98	2.38	8.42	5.84	2.58	8.09	5.71	2.79	7.44	5.34	3.03	6.89	5.06	3.34
		33°C	9.06	7.14	2.19	8.74	7.00	2.38	8.43	6.86	2.58	8.10	6.72	2.79	7.45	6.31	3.03	6.91	5.99	3.34
		36°C	9.09	8.09	2.19	8.79	7.93	2.38	8.48	7.77	2.58	8.17	7.59	2.80	7.54	7.12	3.04	7.01	6.75	3.35
725	16°C	21°C	7.76	5.72	2.14	7.48	5.58	2.31	7.20	5.43	2.51	6.90	5.27	2.72	6.33	4.91	2.95	5.84	4.62	3.25
		24°C	7.78	6.95	2.14	7.50	6.78	2.31	7.22	6.62	2.51	6.93	6.46	2.72	6.37	6.02	2.95	5.89	5.68	3.25
		27°C	7.88	7.88	2.15	7.61	7.61	2.32	7.35	7.35	2.51	7.09	7.09	2.73	6.54	6.54	2.96	6.09	6.09	3.27
		30°C	8.21	8.21	2.16	7.97	7.97	2.34	7.72	7.72	2.54	7.47	7.47	2.75	6.92	6.92	2.99	6.47	6.47	3.30
	19°C	24°C	8.55	5.41	2.17	8.24	5.28	2.35	7.93	5.14	2.55	7.62	5.00	2.76	6.99	4.66	3.00	6.46	4.39	3.30
		27°C	8.56	6.24	2.17	8.26	6.10	2.35	7.95	5.96	2.55	7.63	5.82	2.77	7.01	5.44	3.00	6.48	5.15	3.31
		30°C	8.60	7.69	2.18	8.31	7.53	2.36	8.01	7.36	2.55	7.70	7.18	2.77	7.09	6.71	3.01	6.58	6.34	3.31
		33°C	8.75	8.75	2.18	8.48	8.48	2.37	8.21	8.21	2.57	7.94	7.94	2.79	7.35	7.35	3.03	6.87	6.87	3.34
	22°C	27°C	9.39	5.30	2.21	9.06	5.18	2.40	8.73	5.05	2.60	8.38	4.91	2.82	7.70	4.58	3.06	7.12	4.32	3.37
		30°C	9.40	6.50	2.21	9.07	6.37	2.40	8.73	6.23	2.60	8.39	6.08	2.82	7.71	5.70	3.06	7.13	5.41	3.37
		33°C	9.42	7.62	2.22	9.09	7.48	2.40	8.76	7.32	2.60	8.42	7.17	2.82	7.74	6.72	3.06	7.18	6.38	3.37
		36°C	9.48	8.62	2.22	9.17	8.45	2.41	8.85	8.28	2.61	8.53	8.09	2.83	7.87	7.57	3.07	7.34	7.14	3.39
860	16°C	21°C	8.05	5.97	2.16	7.75	5.82	2.33	7.45	5.67	2.53	7.15	5.51	2.74	6.55	5.13	2.97	6.04	4.83	3.27
		24°C	8.09	7.26	2.16	7.80	7.09	2.33	7.50	6.91	2.53	7.20	6.73	2.74	6.61	6.28	2.97	6.11	5.92	3.28
		27°C	8.22	8.22	2.17	7.95	7.95	2.34	7.68	7.68	2.54	7.41	7.41	2.76	6.84	6.84	2.99	6.38	6.38	3.30
		30°C	8.63	8.63	2.18	8.38	8.38	2.37	8.12	8.12	2.57	7.85	7.85	2.79	7.27	7.27	3.03	6.79	6.79	3.34
	19°C	24°C	8.86	5.73	2.19	8.54	5.59	2.37	8.21	5.44	2.57	7.88	5.30	2.79	7.23	4.94	3.02	6.67	4.66	3.33
		27°C	8.88	6.63	2.19	8.56	6.48	2.37	8.24	6.32	2.57	7.91	6.17	2.79	7.26	5.77	3.03	6.71	5.46	3.33
		30°C	8.96	8.16	2.20	8.64	7.98	2.38	8.33	7.80	2.58	8.01	7.60	2.80	7.38	7.10	3.03	6.85	6.69	3.35
		33°C	9.15	9.15	2.21	8.88	8.88	2.39	8.61	8.61	2.60	8.33	8.33	2.82	7.71	7.71	3.06	7.21	7.21	3.38
	22°C	27°C	9.72	5.60	2.23	9.37	5.48	2.42	9.02	5.34	2.62	8.66	5.20	2.84	7.95	4.86	3.08	7.35	4.58	3.39
		30°C	9.74	6.91	2.23	9.39	6.78	2.42	9.04	6.63	2.62	8.68	6.48	2.84	7.97	6.07	3.08	7.37	5.75	3.40
		33°C	9.77	8.10	2.24	9.44	7.96	2.42	9.09	7.79	2.63	8.73	7.62	2.85	8.03	7.14	3.09	7.44	6.77	3.40
		36°C	9.86	9.14	2.24	9.55	8.98	2.43	9.22	8.78	2.64	8.89	8.56	2.86	8.21	7.99	3.11	7.66	7.52	3.43

Model: FCQN71EXV1 - RQ71CXV1
Heating Mode

ID DB	Outdoor WB													
	-9°C		-6°C		-5°C		6°C		12°C		15°C		18°C	
	TC	SC	TC	SC	TC	SC	TC	SC	TC	SC	TC	SC	TC	SC
15°C	4.889	4.889	5.534	5.534	5.749	5.749	8.112	8.112	9.401	9.401	10.046	10.046	10.690	10.690
17°C	4.761	4.761	5.326	5.326	5.631	5.631	8.102	8.102	9.328	9.328	9.981	9.981	10.633	10.633
19°C	4.633	4.633	5.119	5.119	5.513	5.513	8.093	8.093	9.255	9.255	9.915	9.915	10.576	10.576
21°C	4.505	4.505	4.986	4.986	5.396	5.396	8.015	8.015	9.182	9.182	9.850	9.850	10.518	10.518
23°C	4.377	4.377	4.928	4.928	5.278	5.278	7.870	7.870	9.109	9.109	9.785	9.785	10.461	10.461
25°C	4.248	4.248	4.870	4.870	5.160	5.160	7.725	7.725	9.036	9.036	9.720	9.720	10.404	10.404
27°C	4.120	4.120	4.812	4.812	5.043	5.043	7.579	7.579	8.963	8.963	9.655	9.655	10.347	10.347
	Frost Region													

Remark:
AFR: Air flow rate (CFM)
EWB: Entering Wet Bulb Temp. (°C)
EDB: Entering Dry Bulb Temp. (°C)
TC: Total Cooling / Heating Capacity (kW)
SC: Sensible Cooling / Heating Capacity (kW)
PI: Power Input (kW)

Notes:
1. Ratings shown are net capacities.
2. shows nominal capacities.
3. Direct interpolation is permissible. Do not extrapolate.
4. Unit is able to operate at ambient from 19°C to 46°C DB (cooling) / -9°C to 18°C WB (heating) without pressure trip.

DAIKIN_FFRN.indb 45 12/27/2012 9:28:14 AM

Model: FCQN100EXV1- RQ90DXV1
Cooling Mode

AFR (CFM)	EWB	EDB	Outdoor temperature																	
			19°C			25°C			30°C			35°C			40°C			46°C		
			TC	SC	PI	TC	SC	PI	TC	SC	PI	TC	SC	PI	TC	SC	PI	TC	SC	PI
740	16°C	21°C	8.07	6.17	2.14	7.78	6.00	2.32	7.50	5.84	2.51	7.19	5.68	2.72	6.61	5.28	2.95	6.10	4.97	3.25
		24°C	8.08	7.38	2.14	7.79	7.21	2.32	7.51	7.05	2.51	7.21	6.87	2.72	6.62	6.42	2.95	6.12	6.05	3.26
		27°C	8.14	8.14	2.15	7.87	7.87	2.32	7.60	7.60	2.52	7.31	7.31	2.73	6.75	6.75	2.96	6.28	6.28	3.27
		30°C	8.40	8.40	2.16	8.15	8.15	2.34	7.91	7.91	2.53	7.65	7.65	2.75	7.09	7.09	2.99	6.64	6.64	3.30
	19°C	24°C	8.90	5.76	2.18	8.59	5.61	2.36	8.27	5.46	2.55	7.95	5.31	2.77	7.30	4.94	3.00	6.75	4.65	3.31
		27°C	8.91	6.59	2.18	8.59	6.44	2.36	8.28	6.29	2.55	7.95	6.14	2.77	7.31	5.74	3.00	6.76	5.44	3.31
		30°C	8.92	8.13	2.18	8.61	7.95	2.36	8.31	7.78	2.56	7.99	7.59	2.77	7.36	7.10	3.01	6.83	6.72	3.32
		33°C	9.03	9.03	2.18	8.73	8.73	2.36	8.45	8.45	2.56	8.16	8.16	2.78	7.55	7.55	3.02	7.06	7.06	3.34
	22°C	27°C	9.79	5.63	2.22	9.45	5.50	2.40	9.11	5.36	2.60	8.75	5.21	2.82	8.05	4.86	3.06	7.45	4.58	3.37
		30°C	9.80	6.87	2.22	9.46	6.72	2.40	9.11	6.57	2.60	8.76	6.41	2.82	8.05	6.00	3.06	7.45	5.69	3.37
		33°C	9.80	8.02	2.22	9.46	7.87	2.40	9.12	7.71	2.60	8.76	7.55	2.82	8.06	7.09	3.06	7.47	6.73	3.38
		36°C	9.83	9.09	2.22	9.51	8.91	2.40	9.18	8.73	2.61	8.84	8.53	2.83	8.16	8.00	3.07	7.58	7.58	3.39
860	16°C	21°C	8.40	6.43	2.16	8.09	6.26	2.34	7.79	6.10	2.53	7.47	5.93	2.75	6.85	5.52	2.98	6.32	5.19	3.28
		24°C	8.42	7.81	2.16	8.12	7.62	2.34	7.82	7.44	2.53	7.50	7.25	2.75	6.89	6.77	2.98	6.37	6.37	3.29
		27°C	8.52	8.52	2.17	8.24	8.24	2.35	7.95	7.95	2.54	7.67	7.67	2.76	7.08	7.08	2.99	6.59	6.59	3.30
		30°C	8.88	8.88	2.18	8.62	8.62	2.36	8.36	8.36	2.56	8.09	8.09	2.78	7.49	7.49	3.03	7.00	7.00	3.34
	19°C	24°C	9.25	6.08	2.20	8.92	5.93	2.38	8.59	5.78	2.58	8.24	5.62	2.79	7.57	5.23	3.03	6.99	4.93	3.34
		27°C	9.27	7.01	2.20	8.94	6.85	2.38	8.60	6.70	2.58	8.26	6.54	2.80	7.59	6.11	3.03	7.01	5.79	3.34
		30°C	9.31	8.64	2.20	8.99	8.46	2.38	8.67	8.27	2.58	8.33	8.07	2.80	7.67	7.54	3.04	7.12	7.12	3.35
		33°C	9.47	9.47	2.21	9.18	9.18	2.39	8.89	8.89	2.60	8.59	8.59	2.82	7.96	7.96	3.06	7.44	7.44	3.38
	22°C	27°C	10.16	5.96	2.24	9.81	5.82	2.42	9.44	5.67	2.63	9.07	5.52	2.85	8.33	5.15	3.09	7.71	4.85	3.40
		30°C	10.18	7.31	2.24	9.82	7.16	2.42	9.45	7.00	2.63	9.08	6.84	2.85	8.34	6.40	3.09	7.72	6.07	3.41
		33°C	10.20	8.57	2.24	9.84	8.40	2.43	9.48	8.23	2.63	9.11	8.05	2.85	8.38	7.56	3.10	7.77	7.17	3.41
		36°C	10.26	9.68	2.24	9.93	9.50	2.43	9.58	9.30	2.64	9.23	9.08	2.86	8.52	8.50	3.11	7.94	7.94	3.43
1030	16°C	21°C	8.71	6.71	2.18	8.39	6.54	2.36	8.07	6.37	2.55	7.73	6.19	2.77	7.09	5.77	3.00	6.54	5.43	3.31
		24°C	8.75	8.15	2.18	8.44	7.96	2.36	8.12	7.77	2.56	7.79	7.56	2.77	7.16	7.06	3.01	6.61	6.61	3.31
		27°C	8.90	8.90	2.19	8.60	8.60	2.37	8.31	8.31	2.57	8.02	8.02	2.79	7.41	7.41	3.02	6.90	6.90	3.34
		30°C	9.34	9.34	2.21	9.07	9.07	2.39	8.79	8.79	2.59	8.50	8.50	2.82	7.87	7.87	3.06	7.35	7.35	3.38
	19°C	24°C	9.59	6.44	2.22	9.24	6.28	2.40	8.89	6.12	2.60	8.53	5.95	2.82	7.82	5.55	3.06	7.22	5.23	3.37
		27°C	9.61	7.45	2.22	9.27	7.28	2.40	8.92	7.11	2.60	8.56	6.93	2.82	7.86	6.48	3.06	7.26	6.13	3.37
		30°C	9.69	9.17	2.22	9.35	8.97	2.41	9.01	8.76	2.61	8.67	8.54	2.83	7.98	7.98	3.07	7.41	7.41	3.38
		33°C	9.90	9.90	2.23	9.61	9.61	2.42	9.32	9.32	2.62	9.01	9.01	2.85	8.35	8.35	3.10	7.81	7.81	3.42
	22°C	27°C	10.52	6.30	2.26	10.14	6.16	2.45	9.76	6.00	2.65	9.37	5.85	2.87	8.61	5.46	3.12	7.95	5.15	3.43
		30°C	10.54	7.76	2.26	10.16	7.62	2.45	9.78	7.45	2.65	9.39	7.28	2.88	8.63	6.82	3.12	7.98	6.46	3.43
		33°C	10.58	9.10	2.26	10.21	8.94	2.45	9.84	8.75	2.66	9.45	8.56	2.88	8.69	8.02	3.12	8.05	7.61	3.44
		36°C	10.67	10.27	2.27	10.34	10.09	2.46	9.98	9.86	2.66	9.62	9.62	2.89	8.89	8.89	3.14	8.29	8.29	3.46

Model: FCQN100EXV1- RQ90DXV1
Heating Mode

ID DB	Outdoor WB													
	-9°C		-6°C		-5°C		6°C		12°C		15°C		18°C	
	TC	SC	TC	SC	TC	SC	TC	SC	TC	SC	TC	SC	TC	SC
15°C	5.527	5.527	6.256	6.256	6.499	6.499	9.171	9.171	10.628	10.628	11.357	11.357	12.085	12.085
17°C	5.382	5.382	5.751	5.751	6.382	6.382	9.160	9.160	10.633	10.633	11.383	11.383	12.133	12.133
19°C	5.238	5.238	5.247	5.247	6.266	6.266	9.149	9.149	10.637	10.637	11.409	11.409	12.180	12.180
21°C	5.093	5.093	5.069	5.069	6.150	6.150	9.115	9.115	10.642	10.642	11.435	11.435	12.228	12.228
23°C	4.948	4.948	5.217	5.217	6.033	6.033	9.057	9.057	10.647	10.647	11.461	11.461	12.275	12.275
25°C	4.803	4.803	5.366	5.366	5.917	5.917	9.000	9.000	10.652	10.652	11.487	11.487	12.323	12.323
27°C	4.658	4.658	5.515	5.515	5.800	5.800	8.942	8.942	10.656	10.656	11.513	11.513	12.370	12.370
	Frost Region													

Remark:
AFR: Air flow rate (CFM)
EWB: Entering Wet Bulb Temp. (°C)
EDB: Entering Dry Bulb Temp. (°C)
TC: Total Cooling / Heating Capacity (kW)
SC: Sensible Cooling / Heating Capacity (kW)
PI: Power Input (kW)

Notes:
1. Ratings shown are net capacities.
2. ▒ shows nominal capacities.
3. Direct interpolation is permissible. Do not extrapolate.
4. Unit is able to operate at ambient from 19°C to 46°C DB (cooling) / -9°C to 18°C WB (heating) without pressure trip.

DAIKIN_FFRN.indb 46 12/27/2012 9:28:14 AM

Model: FCQN100EXV1- RQ90DXY1
Cooling Mode

AFR (CFM)	EWB	EDB	Outdoor temperature																	
			19°C			25°C			30°C			35°C			40°C			46°C		
			TC	SC	PI	TC	SC	PI	TC	SC	PI	TC	SC	PI	TC	SC	PI	TC	SC	PI
740	16°C	21°C	8.57	6.14	2.10	8.27	5.98	2.28	7.96	5.82	2.47	7.64	5.66	2.67	7.02	5.26	2.90	6.48	4.95	3.20
		24°C	8.58	7.36	2.11	8.28	7.19	2.28	7.97	7.02	2.47	7.65	6.85	2.67	7.03	6.39	2.90	6.50	6.03	3.20
		27°C	8.65	8.34	2.11	8.36	8.15	2.28	8.07	7.96	2.47	7.76	7.76	2.68	7.16	7.16	2.91	6.66	6.66	3.21
		30°C	8.92	8.92	2.12	8.66	8.66	2.29	8.40	8.40	2.49	8.13	8.13	2.70	7.53	7.53	2.93	7.05	7.05	3.24
	19°C	24°C	9.45	5.74	2.14	9.12	5.59	2.31	8.79	5.44	2.51	8.44	5.29	2.72	7.76	4.93	2.95	7.17	4.64	3.25
		27°C	9.46	6.56	2.14	9.13	6.41	2.31	8.79	6.27	2.51	8.45	6.12	2.72	7.76	5.72	2.95	7.18	5.42	3.25
		30°C	9.47	8.10	2.14	9.15	7.93	2.32	8.82	7.75	2.51	8.49	7.56	2.72	7.82	7.07	2.95	7.25	6.69	3.26
		33°C	9.59	9.59	2.14	9.27	9.27	2.32	8.97	8.97	2.52	8.67	8.67	2.73	8.02	8.02	2.97	7.50	7.50	3.28
	22°C	27°C	10.40	5.61	2.18	10.04	5.48	2.36	9.67	5.34	2.56	9.30	5.19	2.77	8.55	4.84	3.01	7.91	4.56	3.31
		30°C	10.40	6.84	2.18	10.04	6.70	2.36	9.68	6.54	2.56	9.30	6.39	2.77	8.55	5.98	3.01	7.92	5.67	3.31
		33°C	10.41	7.99	2.18	10.05	7.84	2.36	9.68	7.68	2.56	9.30	7.52	2.77	8.56	7.06	3.01	7.94	6.71	3.32
		36°C	10.44	9.06	2.18	10.10	8.88	2.36	9.75	8.69	2.56	9.39	8.50	2.78	8.66	7.97	3.02	8.05	7.56	3.33
860	16°C	21°C	8.92	6.41	2.12	8.60	6.24	2.30	8.27	6.08	2.49	7.93	5.91	2.70	7.28	5.50	2.92	6.71	5.18	3.22
		24°C	8.94	7.78	2.12	8.62	7.60	2.30	8.30	7.41	2.49	7.96	7.23	2.70	7.32	6.74	2.93	6.76	6.36	3.23
		27°C	9.05	8.83	2.13	8.75	8.63	2.30	8.45	8.41	2.50	8.14	8.14	2.71	7.52	7.52	2.94	7.00	7.00	3.25
		30°C	9.43	9.43	2.14	9.16	9.16	2.32	8.88	8.88	2.52	8.59	8.59	2.74	7.96	7.96	2.97	7.44	7.44	3.28
	19°C	24°C	9.82	6.06	2.16	9.47	5.91	2.34	9.12	5.76	2.53	8.75	5.60	2.74	8.04	5.22	2.98	7.42	4.92	3.28
		27°C	9.84	6.98	2.16	9.49	6.83	2.34	9.14	6.67	2.53	8.77	6.52	2.75	8.06	6.09	2.98	7.45	5.77	3.28
		30°C	9.89	8.61	2.16	9.54	8.43	2.34	9.20	8.24	2.54	8.85	8.04	2.75	8.15	7.51	2.98	7.56	7.10	3.29
		33°C	10.05	10.05	2.17	9.75	9.75	2.35	9.44	9.44	2.55	9.12	9.12	2.77	8.45	8.45	3.01	7.90	7.90	3.32
	22°C	27°C	10.79	5.94	2.20	10.41	5.80	2.38	10.03	5.65	2.58	9.63	5.50	2.80	8.85	5.13	3.04	8.18	4.84	3.34
		30°C	10.81	7.28	2.20	10.43	7.13	2.38	10.04	6.97	2.58	9.64	6.81	2.80	8.86	6.38	3.04	8.20	6.05	3.34
		33°C	10.83	8.53	2.20	10.45	8.37	2.38	10.07	8.20	2.58	9.67	8.03	2.80	8.90	7.53	3.04	8.25	7.15	3.35
		36°C	10.89	9.65	2.20	10.54	9.47	2.39	10.17	9.27	2.59	9.80	9.05	2.81	9.04	8.47	3.05	8.43	7.99	3.37
1030	16°C	21°C	9.25	6.69	2.14	8.91	6.52	2.32	8.57	6.35	2.51	8.21	6.17	2.72	7.53	5.74	2.95	6.94	5.41	3.25
		24°C	9.30	8.13	2.14	8.96	7.93	2.32	8.62	7.74	2.51	8.27	7.54	2.72	7.60	7.03	2.95	7.02	6.63	3.25
		27°C	9.45	9.31	2.15	9.14	9.07	2.33	8.83	8.82	2.52	8.51	8.51	2.74	7.87	7.87	2.97	7.33	7.33	3.28
		30°C	9.92	9.92	2.17	9.63	9.63	2.35	9.33	9.33	2.55	9.03	9.03	2.77	8.36	8.36	3.01	7.80	7.80	3.32
	19°C	24°C	10.18	6.41	2.18	9.81	6.26	2.36	9.44	6.10	2.55	9.05	5.93	2.77	8.31	5.53	3.00	7.67	5.21	3.31
		27°C	10.21	7.42	2.18	9.84	7.25	2.36	9.47	7.08	2.55	9.09	6.91	2.77	8.35	6.46	3.00	7.71	6.11	3.31
		30°C	10.29	9.13	2.18	9.93	8.93	2.36	9.57	8.73	2.56	9.21	8.51	2.78	8.48	7.95	3.01	7.87	7.49	3.32
		33°C	10.52	10.52	2.19	10.21	10.21	2.38	9.89	9.89	2.58	9.57	9.57	2.80	8.86	8.86	3.04	8.29	8.29	3.36
	22°C	27°C	11.17	6.27	2.22	10.77	6.14	2.40	10.37	5.98	2.60	9.95	5.83	2.82	9.14	5.44	3.06	8.45	5.13	3.37
		30°C	11.19	7.74	2.22	10.79	7.59	2.40	10.39	7.42	2.60	9.97	7.26	2.82	9.16	6.79	3.06	8.47	6.44	3.37
		33°C	11.23	9.07	2.22	10.84	8.91	2.41	10.44	8.72	2.61	10.03	8.53	2.83	9.23	7.99	3.07	8.55	7.59	3.38
		36°C	11.33	10.24	2.23	10.98	10.05	2.41	10.60	9.83	2.62	10.22	9.59	2.84	9.44	8.94	3.08	8.80	8.42	3.40

Model: FCQN100EXV1- RQ90DXY1
Heating Mode

ID DB	Outdoor WB													
	-9°C		-6°C		-5°C		6°C		12°C		15°C		18°C	
	TC	SC	TC	SC	TC	SC	TC	SC	TC	SC	TC	SC	TC	SC
15°C	5.807	5.807	6.573	6.573	6.828	6.828	9.635	9.635	11.167	11.167	11.932	11.932	12.698	12.698
17°C	5.655	5.655	6.419	6.419	6.672	6.672	9.624	9.624	10.993	10.993	11.755	11.755	12.518	12.518
19°C	5.503	5.503	6.265	6.265	6.515	6.515	9.612	9.612	10.819	10.819	11.578	11.578	12.338	12.338
21°C	5.351	5.351	6.110	6.110	6.359	6.359	9.467	9.467	10.645	10.645	11.401	11.401	12.157	12.157
23°C	5.198	5.198	5.954	5.954	6.203	6.203	9.188	9.188	10.471	10.471	11.224	11.224	11.977	11.977
25°C	5.046	5.046	5.797	5.797	6.046	6.046	8.908	8.908	10.297	10.297	11.047	11.047	11.797	11.797
27°C	4.894	4.894	5.641	5.641	5.890	5.890	8.629	8.629	10.123	10.123	10.870	10.870	11.617	11.617
	Frost Region													

Remark:
AFR: Air flow rate (CFM)
EWB: Entering Wet Bulb Temp. (°C)
EDB: Entering Dry Bulb Temp. (°C)
TC: Total Cooling / Heating Capacity (kW)
SC: Sensible Cooling / Heating Capacity (kW)
PI: Power Input (kW)

Notes:
1. Ratings shown are net capacities.
2. shows nominal capacities.
3. Direct interpolation is permissible. Do not extrapolate.
4. Unit is able to operate at ambient from 19°C to 46°C DB (cooling) / -9°C to 18°C WB (heating) without pressure trip.

DAIKIN_FFRN.indb 47 12/27/2012 9:28:14 AM

Model: FCQN100EXV1- RQ100DXV1
Cooling Mode

AFR (CFM)	EWB	EDB	Outdoor temperature																	
			19°C			25°C			30°C			35°C			40°C			46°C		
			TC	SC	PI	TC	SC	PI	TC	SC	PI	TC	SC	PI	TC	SC	PI	TC	SC	PI
740	16°C	21°C	10.75	7.10	2.98	10.37	6.91	3.22	9.98	6.73	3.49	9.58	6.53	3.78	8.80	6.08	4.10	8.12	5.72	4.52
		24°C	10.76	8.50	2.98	10.38	8.30	3.22	10.00	8.11	3.49	9.60	7.91	3.78	8.82	7.39	4.11	8.15	6.97	4.53
		27°C	10.85	9.63	2.98	10.49	9.42	3.23	10.12	9.19	3.50	9.74	8.96	3.79	8.98	8.34	4.12	8.36	7.83	4.54
		30°C	11.18	11.18	3.00	10.86	10.86	3.25	10.53	10.53	3.52	10.19	10.19	3.82	9.45	9.45	4.15	8.84	8.84	4.59
	19°C	24°C	11.85	6.63	3.03	11.44	6.46	3.28	11.02	6.29	3.55	10.58	6.11	3.85	9.73	5.69	4.18	8.99	5.36	4.60
		27°C	11.86	7.58	3.03	11.44	7.41	3.28	11.03	7.24	3.55	10.59	7.06	3.85	9.74	6.61	4.18	9.00	6.26	4.60
		30°C	11.88	9.35	3.03	11.47	9.16	3.28	11.07	8.95	3.55	10.65	8.74	3.85	9.80	8.17	4.18	9.09	7.73	4.61
		33°C	12.02	12.02	3.03	11.63	11.63	3.29	11.25	11.25	3.56	10.87	10.87	3.87	10.06	10.06	4.20	9.40	9.40	4.64
	22°C	27°C	13.04	6.49	3.08	12.59	6.33	3.34	12.13	6.17	3.62	11.66	6.00	3.92	10.72	5.59	4.26	9.92	5.27	4.69
		30°C	13.05	7.90	3.08	12.60	7.73	3.34	12.13	7.56	3.62	11.66	7.38	3.92	10.72	6.91	4.26	9.93	6.55	4.69
		33°C	13.05	9.23	3.08	12.60	9.05	3.34	12.14	8.87	3.62	11.67	8.69	3.93	10.74	8.16	4.26	9.95	7.75	4.69
		36°C	13.10	10.47	3.08	12.66	10.26	3.34	12.22	10.04	3.62	11.78	9.82	3.93	10.86	9.21	4.27	10.10	8.74	4.71
860	16°C	21°C	11.18	7.40	3.01	10.78	7.21	3.25	10.37	7.02	3.52	9.95	6.82	3.82	9.13	6.35	4.14	8.42	5.98	4.56
		24°C	11.22	8.98	3.01	10.81	8.77	3.25	10.41	8.56	3.52	9.99	8.35	3.82	9.18	7.79	4.14	8.48	7.35	4.57
		27°C	11.35	10.20	3.01	10.97	9.97	3.26	10.59	9.71	3.53	10.21	9.42	3.83	9.43	8.75	4.16	8.78	8.19	4.59
		30°C	11.83	11.83	3.03	11.48	11.48	3.29	11.13	11.13	3.56	10.77	10.77	3.87	9.98	9.98	4.21	9.33	9.33	4.64
	19°C	24°C	12.32	7.00	3.05	11.88	6.83	3.31	11.44	6.65	3.58	10.98	6.47	3.88	10.08	6.03	4.21	9.31	5.68	4.64
		27°C	12.34	8.07	3.06	11.90	7.89	3.31	11.46	7.71	3.58	11.00	7.53	3.89	10.10	7.04	4.21	9.34	6.66	4.64
		30°C	12.40	9.95	3.06	11.97	9.73	3.31	11.54	9.52	3.59	11.10	9.28	3.89	10.22	8.68	4.22	9.48	8.20	4.66
		33°C	12.61	12.61	3.07	12.22	12.22	3.33	11.83	11.83	3.61	11.44	11.44	3.92	10.60	10.60	4.26	9.91	9.91	4.70
	22°C	27°C	13.54	6.86	3.11	13.06	6.70	3.37	12.57	6.53	3.65	12.07	6.35	3.96	11.10	5.92	4.30	10.26	5.59	4.73
		30°C	13.55	8.41	3.11	13.08	8.24	3.37	12.59	8.05	3.65	12.09	7.87	3.96	11.11	7.37	4.30	10.28	6.99	4.73
		33°C	13.58	9.86	3.11	13.11	9.67	3.37	12.62	9.47	3.66	12.13	9.27	3.97	11.16	8.70	4.30	10.34	8.26	4.74
		36°C	13.66	11.14	3.12	13.22	10.93	3.38	12.76	10.71	3.67	12.29	10.46	3.98	11.34	9.79	4.32	10.58	9.23	4.76
1030	16°C	21°C	11.60	7.72	3.03	11.17	7.53	3.28	10.74	7.33	3.55	10.30	7.12	3.85	9.45	6.64	4.17	8.71	6.25	4.60
		24°C	11.66	9.39	3.03	11.23	9.16	3.28	10.81	8.94	3.55	10.38	8.70	3.85	9.53	8.12	4.18	8.80	7.66	4.60
		27°C	11.85	10.76	3.04	11.46	10.48	3.29	11.07	10.19	3.57	10.67	9.87	3.87	9.86	9.14	4.20	9.19	8.54	4.64
		30°C	12.44	12.44	3.07	12.08	12.08	3.32	11.70	11.70	3.61	11.32	11.32	3.91	10.48	10.48	4.25	9.79	9.79	4.69
	19°C	24°C	12.77	7.41	3.08	12.30	7.23	3.33	11.84	7.04	3.61	11.35	6.85	3.92	10.42	6.39	4.25	9.62	6.02	4.68
		27°C	12.80	8.57	3.08	12.34	8.38	3.34	11.88	8.18	3.61	11.40	7.98	3.92	10.47	7.46	4.25	9.67	7.06	4.68
		30°C	12.91	10.55	3.09	12.45	10.32	3.34	12.01	10.08	3.62	11.55	9.83	3.93	10.63	9.18	4.26	9.87	8.65	4.70
		33°C	13.19	13.19	3.10	12.80	12.80	3.36	12.41	12.41	3.65	12.00	12.00	3.96	11.12	11.12	4.30	10.40	10.40	4.75
	22°C	27°C	14.01	7.25	3.14	13.51	7.09	3.40	13.00	6.91	3.68	12.48	6.73	3.99	11.46	6.28	4.33	10.59	5.93	4.77
		30°C	14.04	8.94	3.14	13.54	8.77	3.40	13.03	8.58	3.69	12.50	8.38	4.00	11.49	7.85	4.33	10.63	7.44	4.77
		33°C	14.09	10.47	3.14	13.60	10.29	3.41	13.10	10.07	3.69	12.58	9.85	4.00	11.58	9.23	4.34	10.72	8.76	4.78
		36°C	14.21	11.82	3.15	13.77	11.61	3.42	13.29	11.35	3.70	12.81	11.07	4.02	11.84	10.33	4.36	11.04	9.72	4.81

Model: FCQN100EXV1- RQ100DXV1
Heating Mode

ID DB	Outdoor WB													
	-9°C		-6°C		-5°C		6°C		12°C		15°C		18°C	
	TC	SC	TC	SC	TC	SC	TC	SC	TC	SC	TC	SC	TC	SC
15°C	6.860	6.860	7.764	7.764	8.065	8.065	11.381	11.381	13.189	13.189	14.094	14.094	14.998	14.998
17°C	6.680	6.680	7.612	7.612	7.912	7.912	11.367	11.367	13.151	13.151	14.075	14.075	14.999	14.999
19°C	6.500	6.500	7.460	7.460	7.759	7.759	11.354	11.354	13.112	13.112	14.056	14.056	15.001	15.001
21°C	6.320	6.320	7.302	7.302	7.606	7.606	11.284	11.284	13.073	13.073	14.038	14.038	15.003	15.003
23°C	6.140	6.140	7.136	7.136	7.453	7.453	11.158	11.158	13.034	13.034	14.019	14.019	15.004	15.004
25°C	5.960	5.960	6.971	6.971	7.300	7.300	11.032	11.032	12.995	12.995	14.001	14.001	15.006	15.006
27°C	5.781	5.781	6.806	6.806	7.147	7.147	10.906	10.906	12.957	12.957	13.982	13.982	15.007	15.007
	Frost Region													

Remark:
AFR: Air flow rate (CFM)
EWB: Entering Wet Bulb Temp. (°C)
EDB: Entering Dry Bulb Temp. (°C)
TC: Total Cooling / Heating Capacity (kW)
SC: Sensible Cooling / Heating Capacity (kW)
PI: Power Input (kW)

Notes:
1. Ratings shown are net capacities.
2. ▒ shows nominal capacities.
3. Direct interpolation is permissible. Do not extrapolate.
4. Unit is able to operate at ambient from 19°C to 46°C DB (cooling) / -9°C to 18°C WB (heating) without pressure trip.

DAIKIN_FFRN.indb 48 12/27/2012 9:28:15 AM

Model: FCQN125EXV1- RQ125DXY1
Cooling Mode

AFR (CFM)	EWB	EDB	Outdoor temperature																	
			19°C			25°C			30°C			35°C			40°C			46°C		
			TC	SC	PI	TC	SC	PI	TC	SC	PI	TC	SC	PI	TC	SC	PI	TC	SC	PI
930	16°C	21°C	11.88	8.18	3.34	11.46	7.97	3.61	11.03	7.75	3.91	10.59	7.53	4.24	9.73	7.01	4.60	8.98	6.59	5.07
		24°C	11.90	9.80	3.34	11.47	9.57	3.61	11.05	9.35	3.91	10.61	9.12	4.24	9.75	8.52	4.60	9.01	8.04	5.07
		27°C	11.99	11.11	3.34	11.59	10.86	3.61	11.18	10.60	3.92	10.76	10.33	4.25	9.93	9.61	4.61	9.24	9.03	5.09
		30°C	12.36	12.36	3.36	12.00	12.00	3.64	11.64	11.64	3.94	11.27	11.27	4.28	10.44	10.44	4.65	9.77	9.77	5.14
	19°C	24°C	13.11	7.64	3.39	12.65	7.45	3.67	12.18	7.25	3.97	11.70	7.04	4.31	10.75	6.56	4.68	9.94	6.18	5.15
		27°C	13.11	8.74	3.39	12.65	8.54	3.67	12.19	8.35	3.98	11.71	8.15	4.31	10.76	7.62	4.68	9.95	7.22	5.16
		30°C	13.13	10.79	3.39	12.68	10.56	3.67	12.23	10.32	3.98	11.77	10.07	4.32	10.84	9.42	4.68	10.05	8.92	5.16
		33°C	13.29	13.29	3.40	12.86	12.86	3.68	12.44	12.44	3.99	12.02	12.02	4.33	11.12	11.12	4.71	10.39	10.39	5.20
	22°C	27°C	14.42	7.48	3.45	13.92	7.30	3.74	13.41	7.11	4.05	12.89	6.92	4.39	11.85	6.45	4.77	10.97	6.08	5.25
		30°C	14.42	9.11	3.45	13.92	8.92	3.74	13.41	8.72	4.05	12.89	8.51	4.40	11.85	7.96	4.77	10.97	7.55	5.25
		33°C	14.43	10.64	3.45	13.93	10.44	3.74	13.42	10.23	4.05	12.90	10.02	4.40	11.87	9.41	4.77	11.00	8.94	5.26
		36°C	14.48	12.07	3.45	14.00	11.83	3.74	13.51	11.58	4.06	13.02	11.32	4.40	12.01	10.62	4.78	11.16	10.07	5.27
1030	16°C	21°C	12.36	8.53	3.37	11.91	8.31	3.64	11.46	8.09	3.94	10.99	7.86	4.27	10.09	7.32	4.63	9.31	6.89	5.11
		24°C	12.40	10.36	3.37	11.95	10.11	3.64	11.51	9.87	3.95	11.04	9.62	4.28	10.14	8.98	4.64	9.38	8.47	5.11
		27°C	12.55	11.76	3.38	12.13	11.49	3.65	11.71	11.19	3.96	11.29	10.86	4.29	10.42	10.09	4.66	9.71	9.44	5.14
		30°C	13.07	13.07	3.40	12.69	12.69	3.68	12.31	12.31	3.99	11.91	11.91	4.33	11.03	11.03	4.71	10.31	10.31	5.20
	19°C	24°C	13.62	8.07	3.42	13.13	7.87	3.70	12.64	7.66	4.01	12.13	7.45	4.35	11.14	6.95	4.72	10.29	6.55	5.20
		27°C	13.64	9.30	3.42	13.15	9.09	3.70	12.66	8.89	4.01	12.15	8.68	4.35	11.17	8.11	4.72	10.32	7.68	5.20
		30°C	13.71	11.47	3.43	13.23	11.22	3.71	12.76	10.97	4.02	12.27	10.70	4.36	11.30	10.01	4.73	10.48	9.45	5.22
		33°C	13.94	13.94	3.44	13.51	13.51	3.72	13.08	13.08	4.04	12.65	12.65	4.39	11.71	11.71	4.77	10.95	10.95	5.26
	22°C	27°C	14.96	7.90	3.48	14.44	7.72	3.77	13.90	7.52	4.09	13.35	7.32	4.44	12.26	6.83	4.81	11.34	6.44	5.30
		30°C	14.98	9.70	3.48	14.45	9.50	3.77	13.91	9.29	4.09	13.36	9.07	4.44	12.28	8.49	4.81	11.36	8.06	5.30
		33°C	15.01	11.36	3.49	14.49	11.15	3.78	13.95	10.92	4.10	13.41	10.69	4.44	12.33	10.02	4.82	11.43	9.52	5.31
		36°C	15.10	12.85	3.49	14.61	12.60	3.79	14.10	12.34	4.10	13.59	12.05	4.45	12.54	11.28	4.83	11.69	10.64	5.33
1200	16°C	21°C	12.82	8.90	3.39	12.35	8.68	3.67	11.87	8.45	3.97	11.38	8.21	4.31	10.44	7.65	4.67	9.62	7.20	5.15
		24°C	12.89	10.82	3.40	12.42	10.56	3.67	11.95	10.30	3.98	11.47	10.03	4.31	10.53	9.36	4.68	9.73	8.83	5.16
		27°C	13.09	12.40	3.41	12.67	12.08	3.69	12.24	11.74	4.00	11.80	11.38	4.34	10.90	10.54	4.71	10.16	9.84	5.20
		30°C	13.75	13.75	3.44	13.35	13.35	3.72	12.94	12.94	4.04	12.51	12.51	4.38	11.58	11.58	4.76	10.82	10.82	5.26
	19°C	24°C	14.11	8.54	3.45	13.60	8.33	3.73	13.08	8.12	4.04	12.55	7.90	4.39	11.52	7.36	4.76	10.63	6.94	5.24
		27°C	14.15	9.88	3.45	13.64	9.65	3.74	13.13	9.43	4.05	12.60	9.20	4.39	11.57	8.60	4.76	10.69	8.14	5.25
		30°C	14.27	12.16	3.46	13.76	11.89	3.74	13.27	11.62	4.06	12.76	11.33	4.40	11.75	10.58	4.77	10.91	9.98	5.26
		33°C	14.58	14.58	3.47	14.15	14.15	3.77	13.71	13.71	4.09	13.26	13.26	4.44	12.29	12.29	4.82	11.49	11.49	5.32
	22°C	27°C	15.48	8.35	3.51	14.93	8.17	3.81	14.37	7.97	4.13	13.79	7.76	4.47	12.67	7.24	4.85	11.71	6.84	5.34
		30°C	15.51	10.30	3.52	14.96	10.10	3.81	14.40	9.88	4.13	13.82	9.66	4.48	12.70	9.05	4.85	11.74	8.58	5.35
		33°C	15.57	12.07	3.52	15.03	11.86	3.81	14.48	11.61	4.13	13.91	11.35	4.48	12.80	10.64	4.86	11.85	10.10	5.36
		36°C	15.71	13.63	3.53	15.21	13.38	3.82	14.69	13.09	4.15	14.16	12.76	4.50	13.08	11.90	4.89	12.20	11.21	5.39

Model: FCQN125EXV1- RQ125DXY1
Heating Mode

ID DB	Outdoor WB													
	-9°C		-6°C		-5°C		6°C		12°C		15°C		18°C	
	TC	SC	TC	SC	TC	SC	TC	SC	TC	SC	TC	SC	TC	SC
15°C	8.209	8.209	9.291	9.291	9.651	9.651	13.619	13.619	15.783	15.783	16.865	16.865	17.947	17.947
17°C	7.993	7.993	9.403	9.403	9.434	9.434	13.603	13.603	15.559	15.559	16.639	16.639	17.720	17.720
19°C	7.778	7.778	9.515	9.515	9.217	9.217	13.587	13.587	15.334	15.334	16.414	16.414	17.493	17.493
21°C	7.563	7.563	9.345	9.345	9.000	9.000	13.394	13.394	15.110	15.110	16.188	16.188	17.266	17.266
23°C	7.348	7.348	8.894	8.894	8.783	8.783	13.025	13.025	14.885	14.885	15.962	15.962	17.039	17.039
25°C	7.133	7.133	8.443	8.443	8.566	8.566	12.657	12.657	14.661	14.661	15.736	15.736	16.811	16.811
27°C	6.917	6.917	7.991	7.991	8.350	8.350	12.288	12.288	14.436	14.436	15.510	15.510	16.584	16.584
	Frost Region													

Remark:
AFR: Air flow rate (CFM)
EWB: Entering Wet Bulb Temp. (°C)
EDB: Entering Dry Bulb Temp. (°C)
TC: Total Cooling / Heating Capacity (kW)
SC: Sensible Cooling / Heating Capacity (kW)
PI: Power Input (kW)

Notes:
1. Ratings shown are net capacities.
2. shows nominal capacities.
3. Direct interpolation is permissible. Do not extrapolate.
4. Unit is able to operate at ambient from 19°C to 46°C DB (cooling) / -9°C to 18°C WB (heating) without pressure trip.

DAIKIN_FFRN.indb 49 12/27/2012 9:28:15 AM

Outline & Dimension

Indoor Unit

Model: FF(R)(Q)N25/35/50CXV1

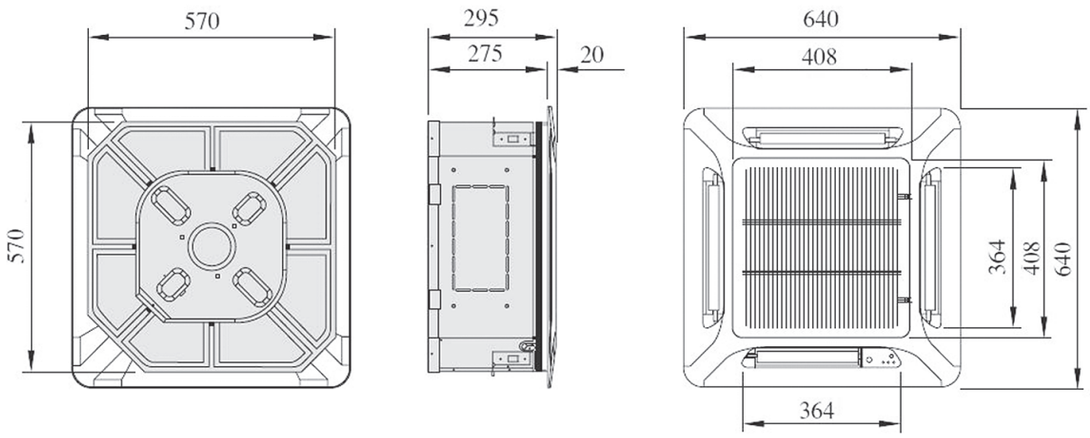

Note: Dimension in mm

Model: FC(R)(Q)N50/60/71/100/125EXV1

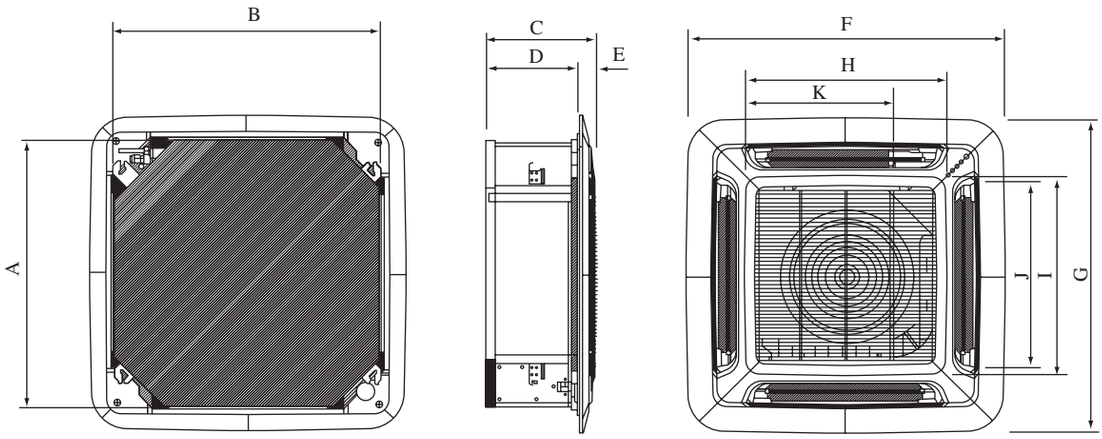

Dimension / Model	A	B	C	D	E	F	G	H	I	J	K
FC(R)(Q)N50/60/71EXV1	820	820	340	300	40	990	990	627	627	607	430
FC(R)(Q)N100/125EXV1	820	820	375	335	40	990	990	627	627	607	430

Note: Dimension in mm

DAIKIN_FFRN.indb 50 12/27/2012 9:28:15 AM

Outdoor Unit

Model: R(Y)N25/35CXV1

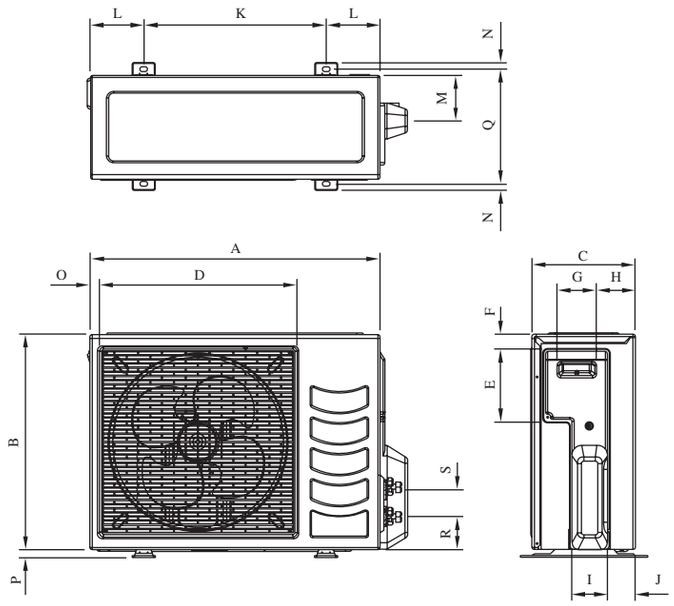

Dimension / Model	A	B	C	D	E	F	G	H	I	J	K	L	M	N	O	P	Q	R	S
R(Y)N25/35CXV1	700	521	250	478	175	36	95	94	86	68	440	130	110	15	21	19	278	80	65

Note: Dimension in mm

Model: R(Y)N50/60CXV1 / R(R)(Q)71CXV1

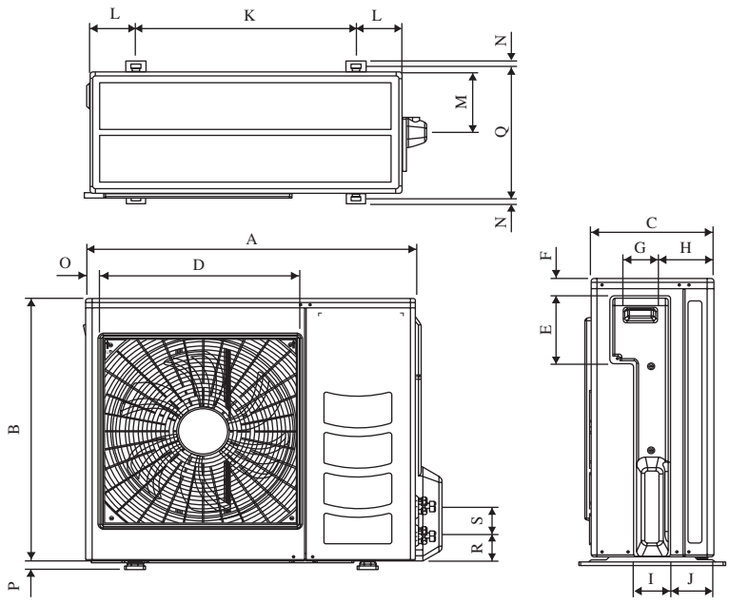

Dimension / Model	A	B	C	D	E	F	G	H	I	J	K	L	M	N	O	P	Q	R	S
R(Y)N50CXV1	855	628	328	520	179	46	93	149	101	113	603	126	164	15	34	23	362	73	75
R(Y)N60CXV1 / R(R)(Q)71CXV1	855	730	328	520	179	46	93	149	101	113	603	126	164	15	34	23	362	73	75

Note: Dimension in mm

DAIKIN_FFRN.indb 51 12/27/2012 9:28:15 AM

Model: R(R)(Q)90/100DXV1 / R(R)(Q)100/125DXY1

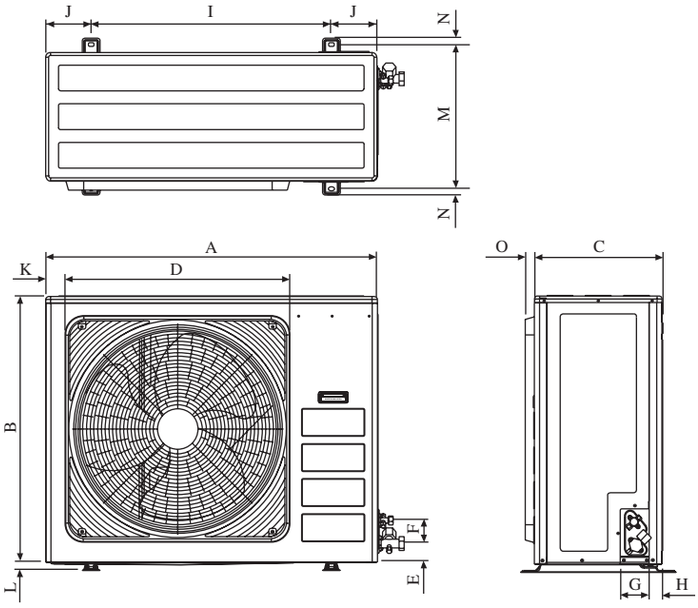

Dimension / Model	A	B	C	D	E	F	G	H	I	J	K	L	M	N	O
R(R)(Q)90/100DXV1 / R(R)(Q)100/125DXY1	1030	826	400	410	57	72	90	40	746	142	60	26	448	22	28

Note: Dimension in mm

DAIKIN_FFRN.indb 52 12/27/2012 9:28:15 AM

Wiring Diagram

Cooling Only

Indoor Unit
Model: FFRN25/35CXV1

Outdoor Unit
Model: RN25/35CXV1

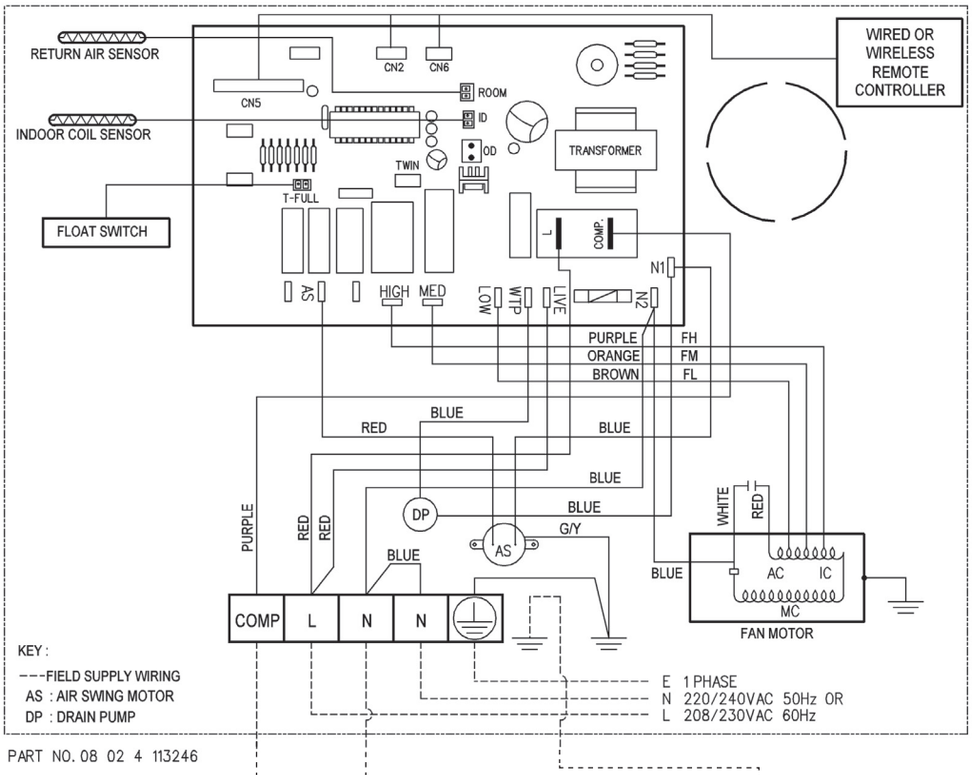

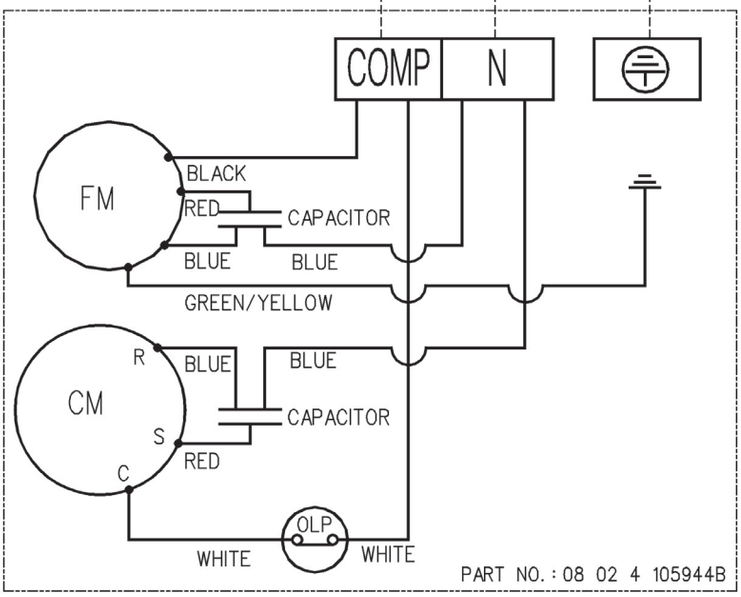

DAIKIN_FFRN.indb 53 12/27/2012 9:28:15 AM

Indoor Unit
Model: FFRN50CXV1

Outdoor Unit
Model: RN50CXV1

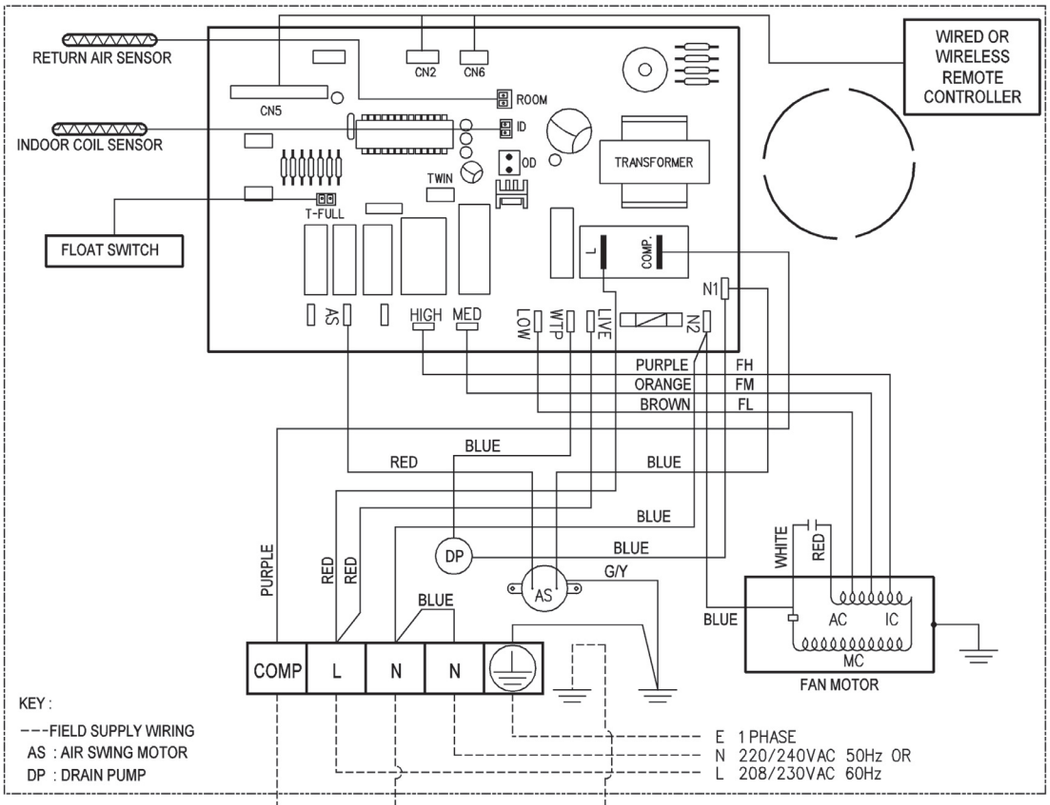

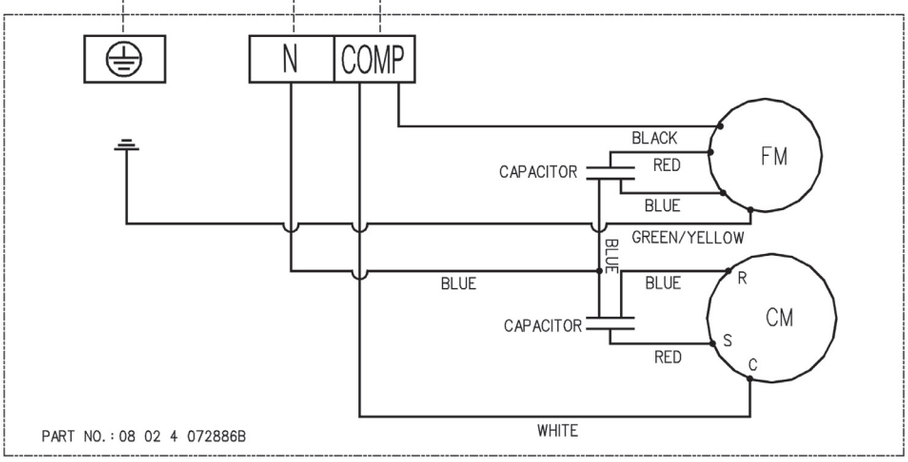

DAIKIN_FFRN.indb 54 12/27/2012 9:28:16 AM

Indoor Unit
Model: FCRN50/60/71EXV1

Outdoor Unit
Model: RN50/60CXV1 / RR71CXV1

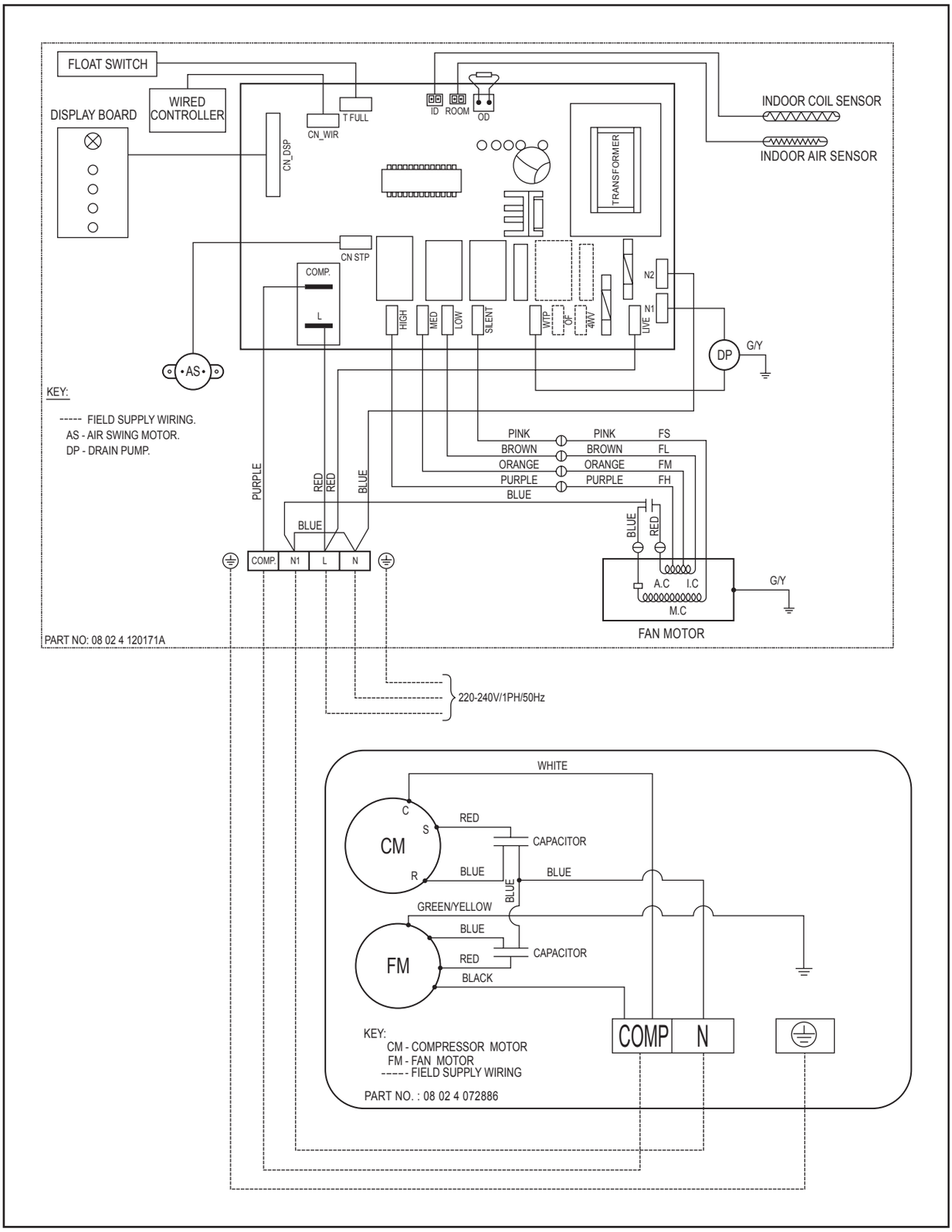

DAIKIN_FFRN.indb 55 12/27/2012 9:28:16 AM

Indoor Unit
Model: FCRN100EXV1

Outdoor Unit
Model: RR90/100DXV1

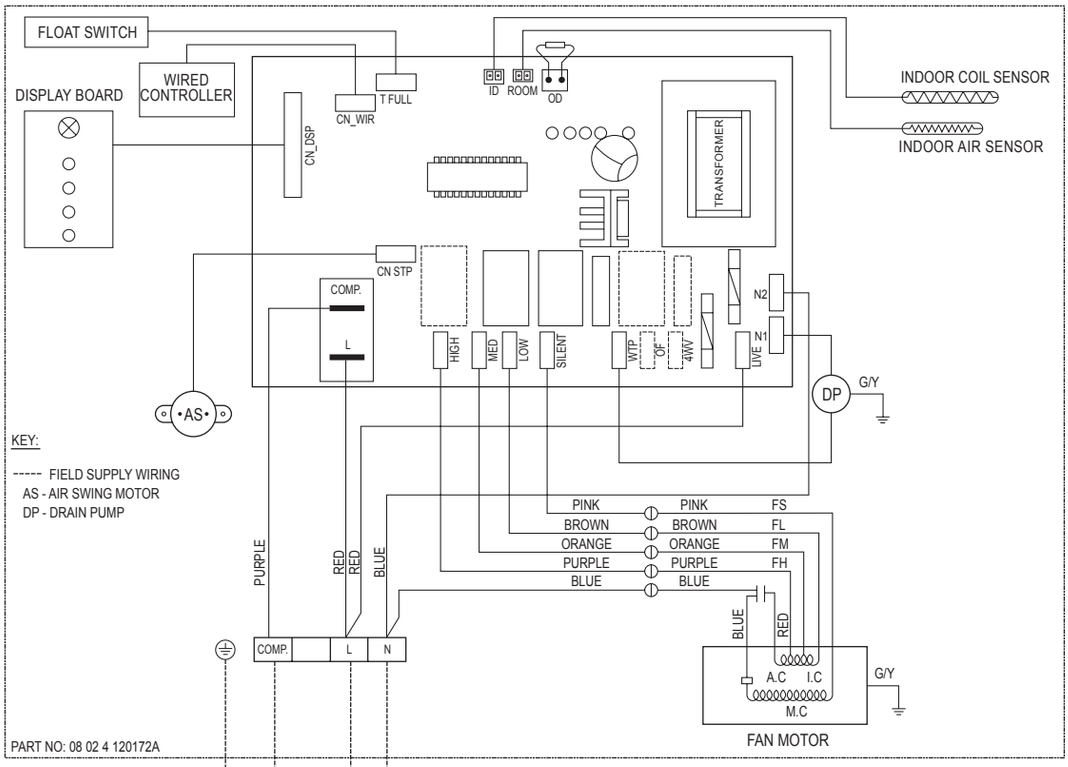

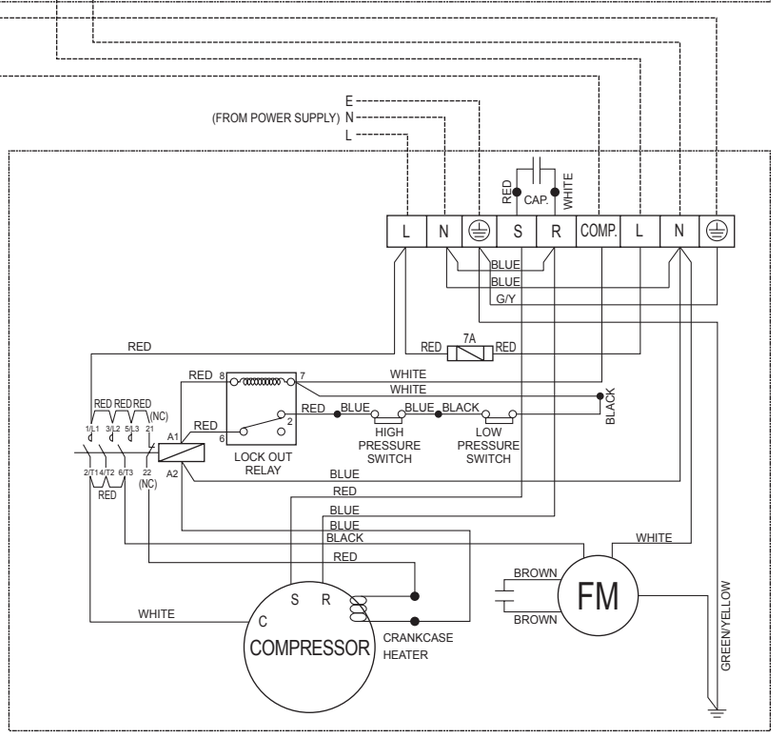

DAIKIN_FFRN.indb 56 12/27/2012 9:28:16 AM

Indoor Unit
Model: FCRN100/125EXV1

Outdoor Unit
Model: RR100/125DXY1

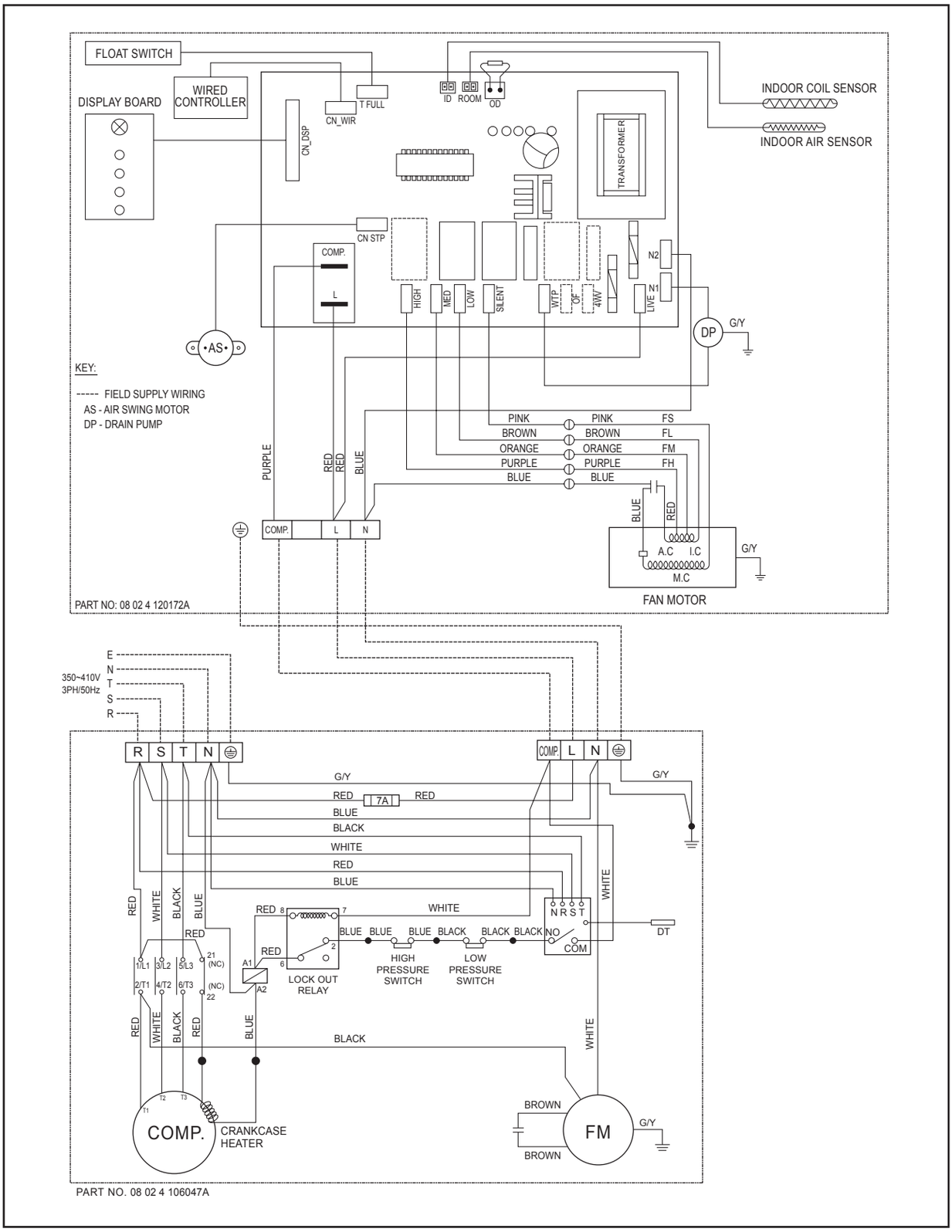

DAIKIN_FFRN.indb 57 12/27/2012 9:28:16 AM

Heatpump

Indoor Unit
Model: FFQN25/35CXV1

Outdoor Unit
Model: RYN25/35CXV1

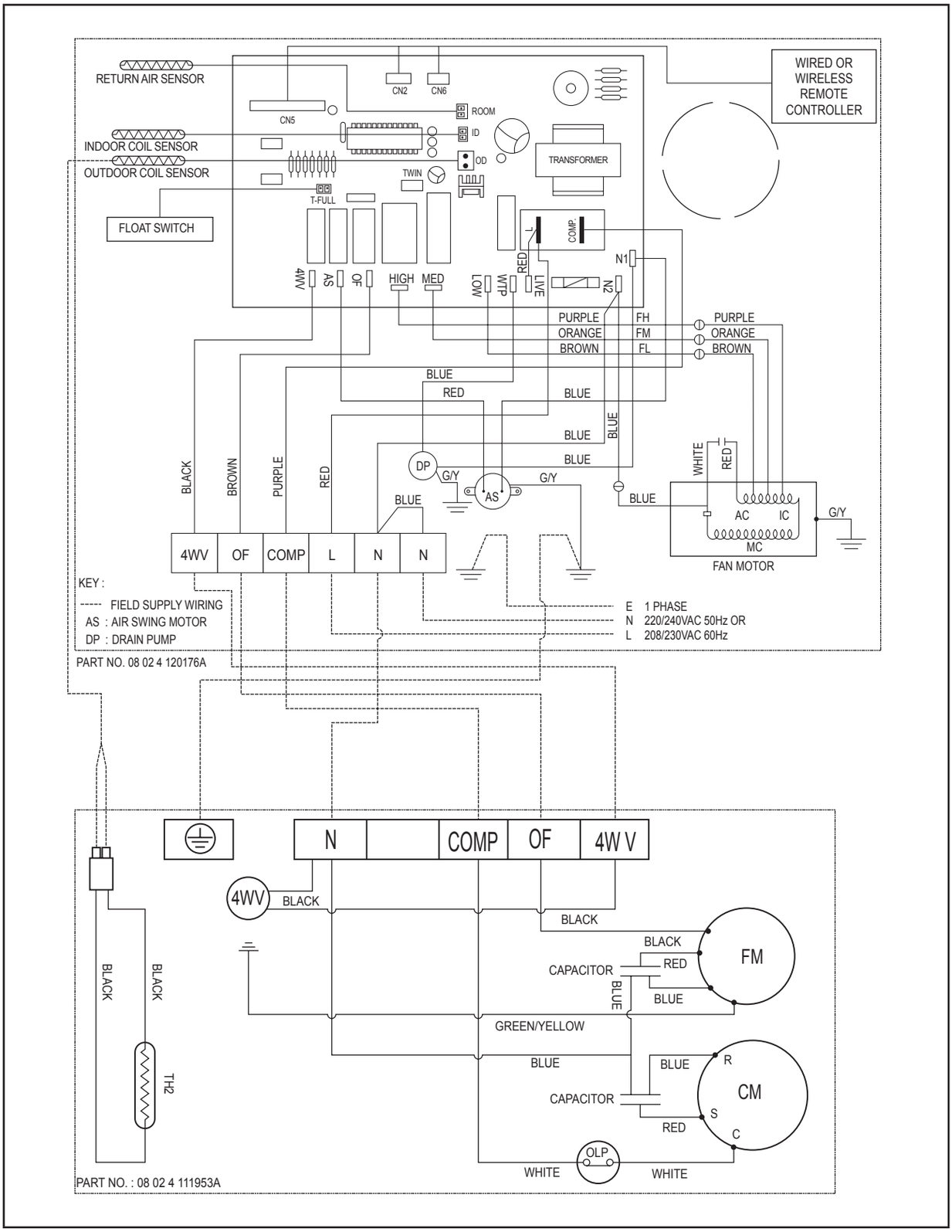

Indoor Unit
Model: FFQN50CXV1

Outdoor Unit
Model: RYN50CXV1

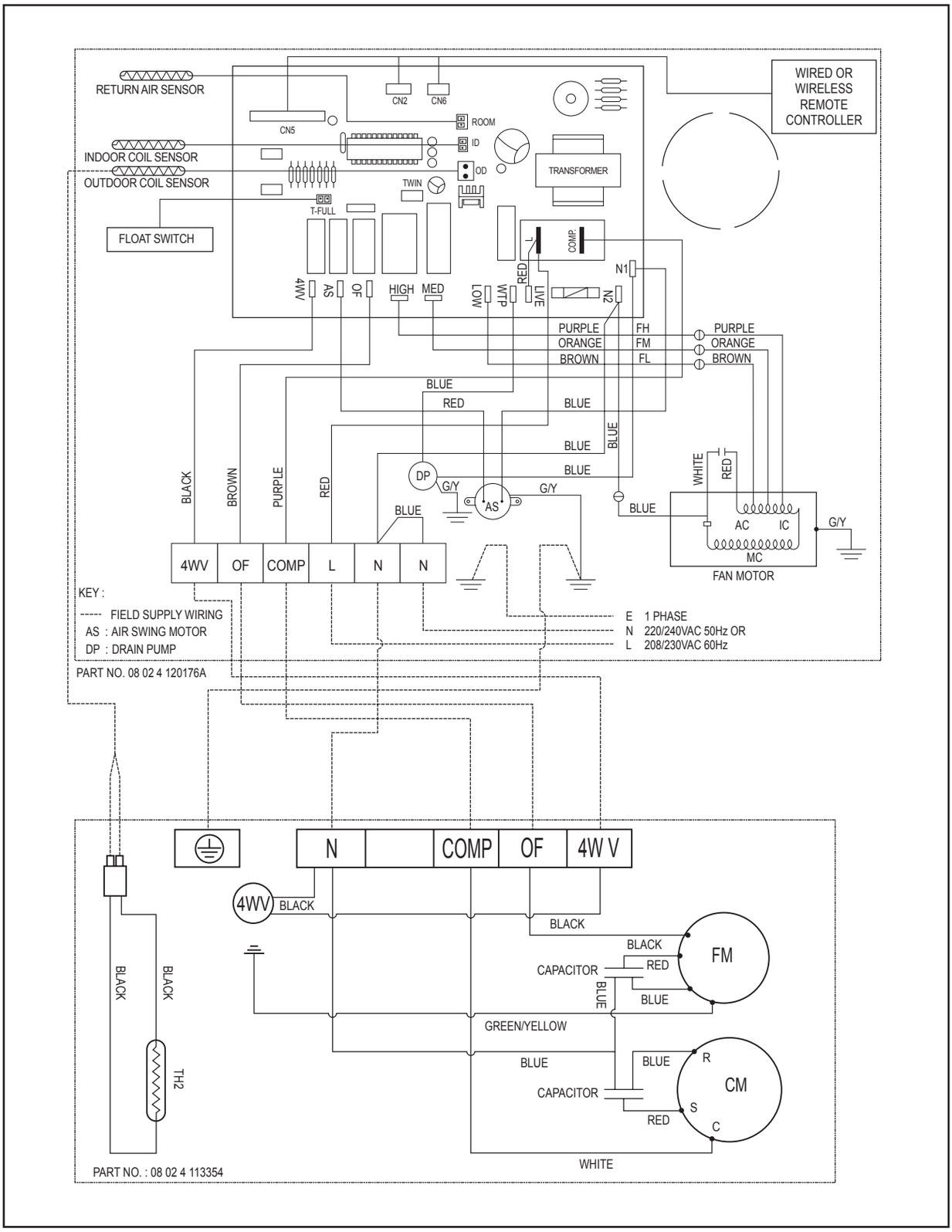

Indoor Unit
Model: FCQN50/60/71EXV1

Outdoor Unit
Model: RYN50/60CXV1 / RQ71CXV1

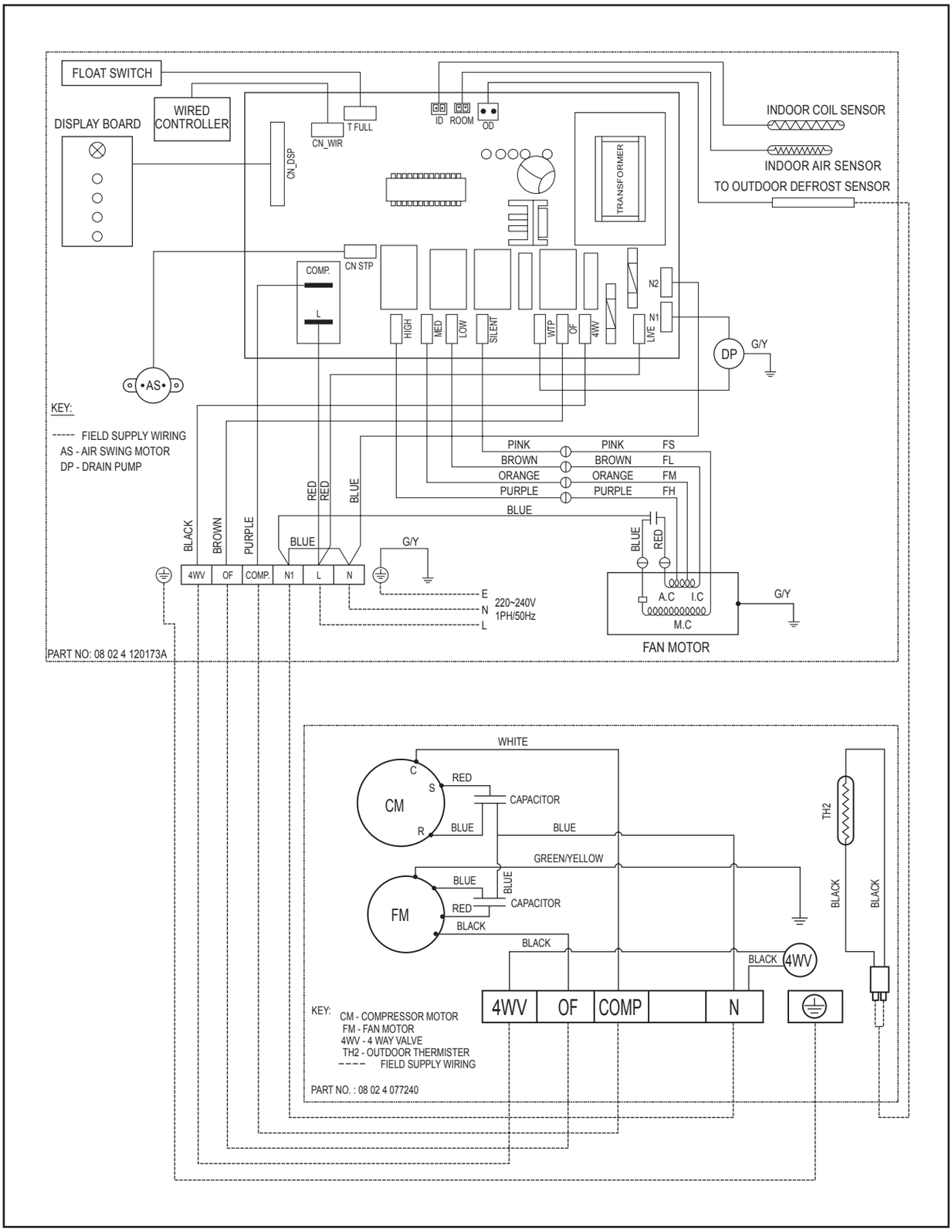

DAIKIN_FFRN.indb 60 12/27/2012 9:28:16 AM

Indoor Unit
Model: FCQN100EXV1

Outdoor Unit
Model: RQ90/100DXV1

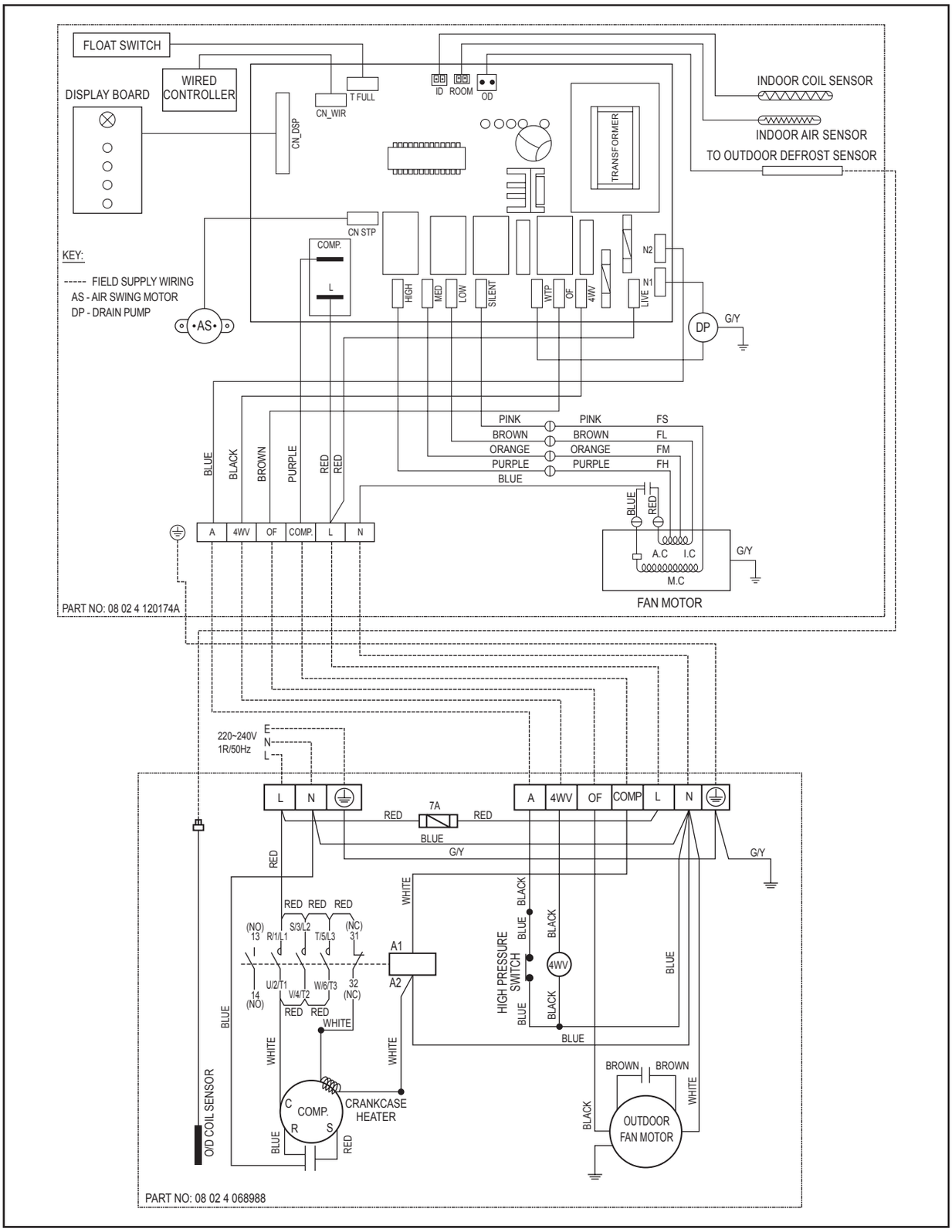

DAIKIN_FFRN.indb 61 12/27/2012 9:28:16 AM

Indoor Unit
Model: FCQN100EXV1

Outdoor Unit
Model: RQ100DXY1

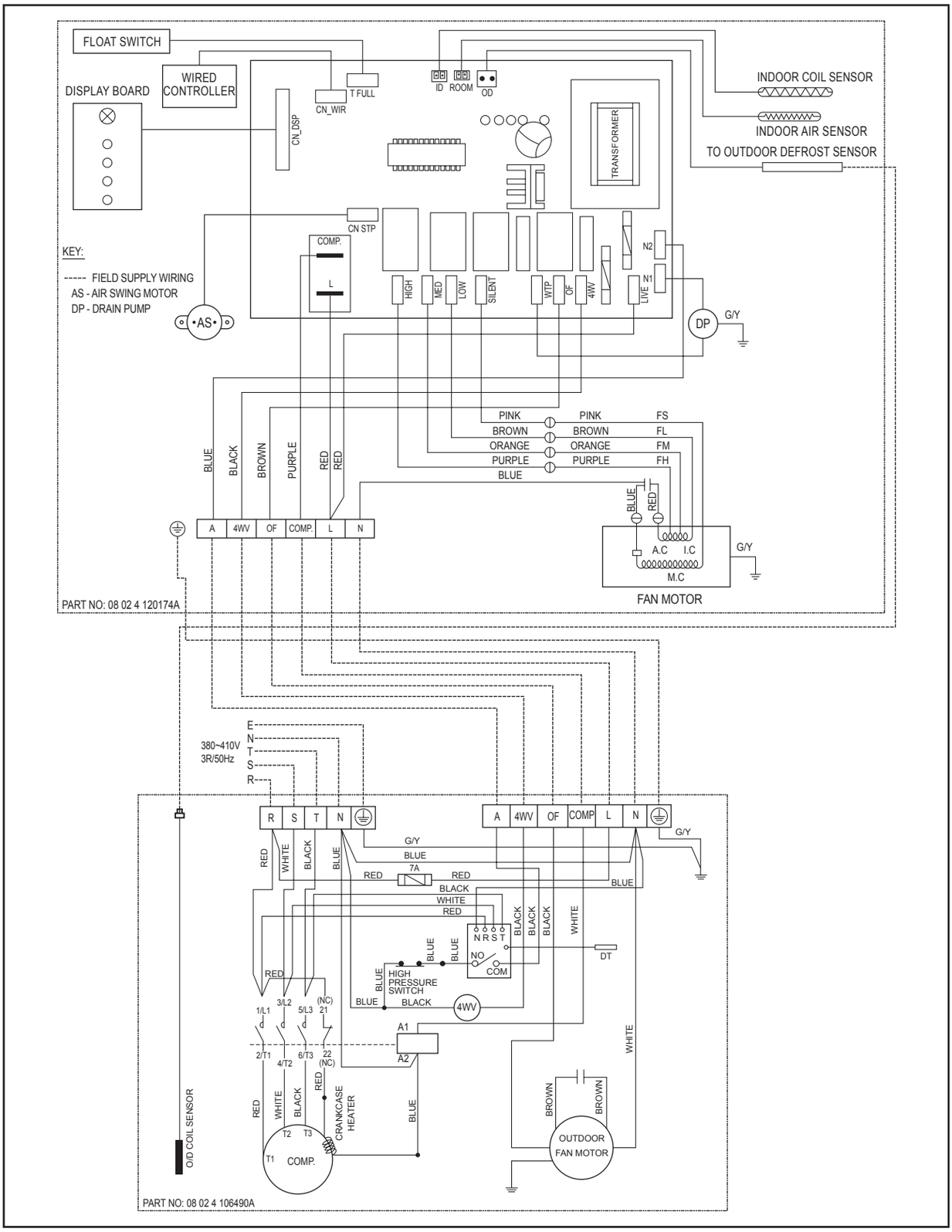

Indoor Unit
Model: FCQN125EXV1

Outdoor Unit
Model: RQ125DXY1

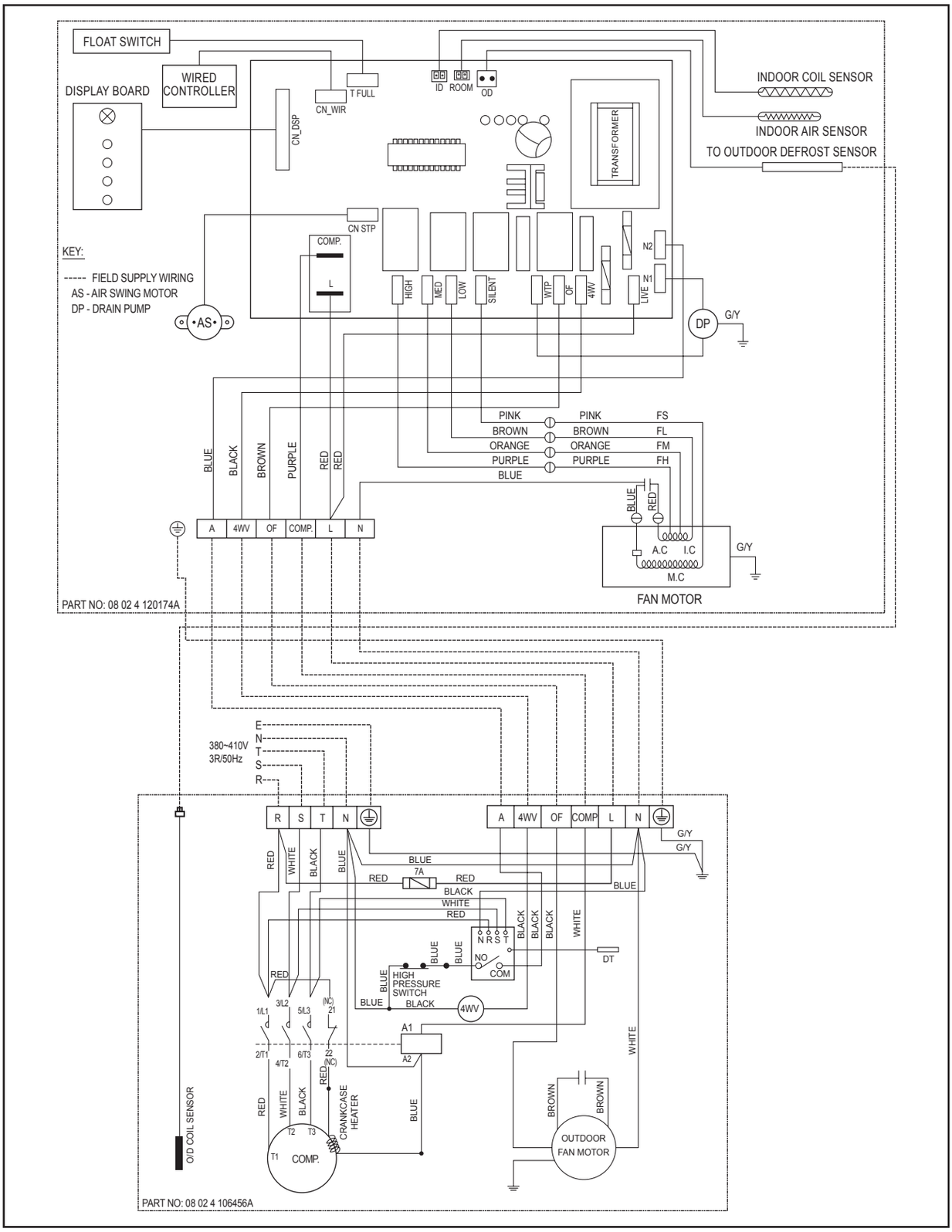

Service & Maintenance

⚠ Warning

- Disconnect from main supply before servicing the air conditioner.
- The unit is designed to give long life operation with minimum maintenance required. However, it should be regularly checked and the following items should be given due attention.

Components	Maintenance Procedures	Period
Air Filter (Indoor Unit)	1. Remove any dust adhering to the filter by using a vacuum cleaner or wash in lukewarm water (below 40°C) with a neutral cleaning detergent. 2. Rinse the filter well and dry before placing it back onto the unit. 3. Note: Never use gasoline, volatile substances or chemicals to clean the filter.	At least once every 2 weeks. More frequently if necessary.
Indoor Unit	1. Clean any dirt or dust on the grille or panel by wiping it with a soft cloth soaked in lukewarm water (below 40°C) and a neutral detergent solution. 2. Note: Never use gasoline, volatile substances or chemicals to clean the indoor unit.	At least once every 2 weeks. More frequently if necessary.
Condense Drain Pan & Pipe	1. Check the cleanliness and clean it if necessary. 2. Check the condensate water flow.	Every 3 months.
Indoor Fan	Check if there is any abnormal noise.	If necessary.
Indoor / Outdoor Coil	1. Check and remove the dirt between the fins. 2. Check and remove any obstacles which hinder air flow through the indoor or outdoor.	Every month.
Power Supply	1. Check the running current and voltage for indoor and outdoor unit. 2. Check the electrical wiring and tighten the wire onto the terminal block if necessary.	Every 2 months. Every year.
Compressor	No maintenance needed if refrigerant circuit remains sealed. However, check for refrigerant leak at joint and fitting.	Every 6 months.

⚠ Caution

- Don’t touch the metal parts of the indoor unit. It may cause an injury.
- When removing or attaching the front panel, use a robust and stable stool and watch your steps carefully.
- When removing or attaching the front panel, support the panel securely with hand to prevent from it falling.
- For cleansing, do no use hot water above 40°C, benzene, gasoline, thinner, nor other volatile oils, polishing compound, scrubbing brushes, nor other hand stuff.
- After cleaning, make sure that the front panel is securely fixed.

DAIKIN_FFRN.indb 64 12/27/2012 9:28:16 AM

Pre Start Up Maintenance

(After Extended Shutdown)

- Inspect thoroughly and clean indoor and outdoor units.
- Clean or replace air filters.
- Clean condensates drain line.
- Clean clogged indoor and outdoor coils.
- Check fan imbalance before operation.
- Tighten all wiring connections and panels.
- Check for refrigerant leakage.

Outdoor Models

The design of the RN/RYN/RR/RQ-C/D outdoor series allows servicing to be carried out easily. The removal of the top, front and side panels makes almost every part accessible.

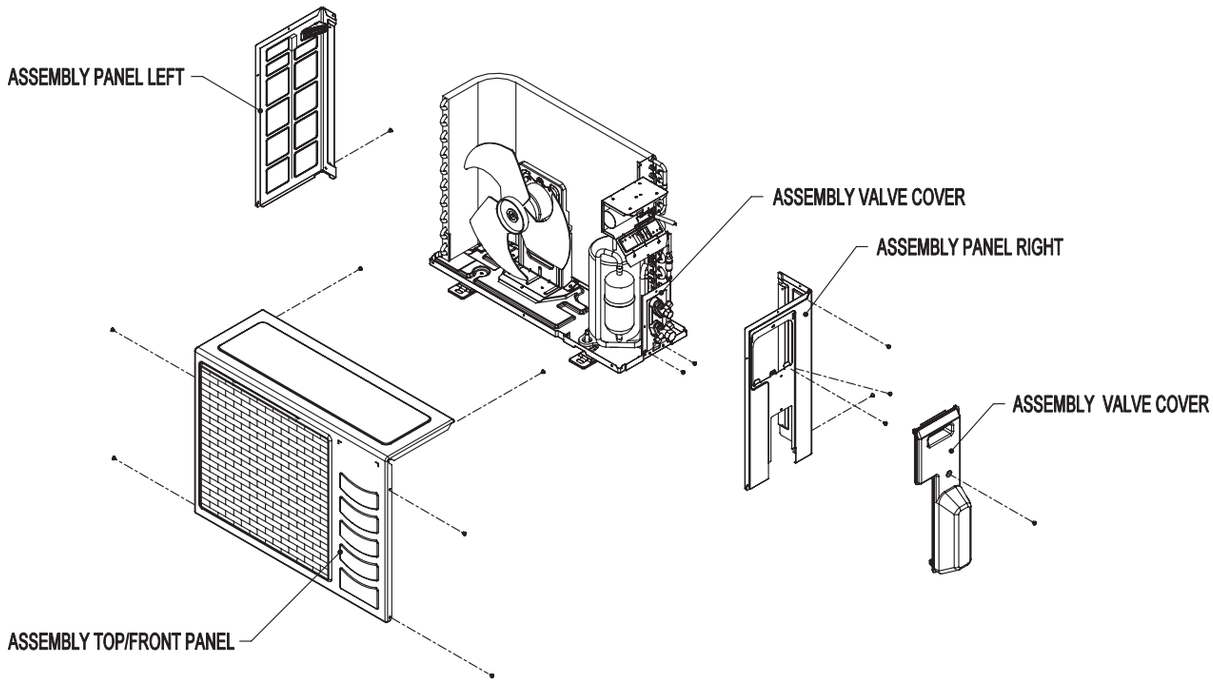

Under normal circumstances, these outdoor units only require a check and cleaning of air intake coil surface once every 3 months. However, if a unit is installed in areas subjected to much oil mist and dust, the coils must be regularly cleaned by qualified Air Conditioner Service Technicians to ensure sufficient heat exchange and proper operation. Otherwise, the systems life span may be shortened.

⚠ Caution

- Do not charge **OXYGEN, ACETYLENE OR OTHER FLAMMABLE** and poisonous gases into the unit when performing a leakage test or an airtight test. These gases could cause severe explosion and damage if exposed to high temperature and pressure.
- It is recommended that only nitrogen or refrigerant be charged when performing the leakage or airtight test.

DAIKIN_FFRN.indb 65 12/27/2012 9:28:16 AM

Troubleshooting

Indicator Lights

LED Indicator Light Display - Cooling Only

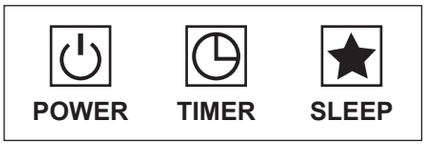

LED Indicator Light Display - Heatpump

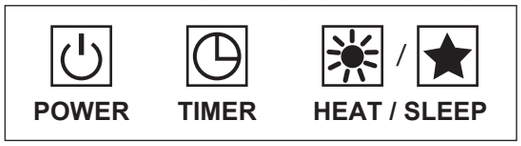

LED Light Diagnostic Table

GREEN	ORANGE	RED	RED	Error Code	Operation / Faulty Indication	Action
○				-	Cooling mode	-
○	○			-	Timer On	-
○		○		-	Sleep mode On	-
○			○	-	Heating mode	-
○			◉	-	Auto Mode in cooling operation	-
○			○	-	Auto Mode in heating operation	-
◉ 1 time				E1	Room air sensor contact loose / short	Check room sensor connection / change room air sensor
◉ 2 times				E2	Indoor coil sensor contact open	Check indoor coil sensor connection / change indoor coil sensor
◉ 3 times				E3	Outdoor coil sensor contact open	Check outdoor coil sensor connection / change outdoor coil sensor
	◉ 1 time			E4	Compressor overload protection / Indoor or Outdoor coil sensor short	If running ampere highly increase, change the compressor. If not, replace the coil sensor.
	◉ 2 times			E6	Pump fault	Clear the clogging at drain pipe. If pump is not working, change the pump.
	◉ 3 times			E5	Gas leak	Top up refrigerant / check for leakage

○ ON ◉ BLINKING

DAIKIN_FFRN.indb 66 12/27/2012 9:28:17 AM

Phase Sequencer

The unit with Scroll Compressor only can rotate in one direction. For this reason, a protective device (phase sequencer) is fitted to prevent incorrect wiring of the electrical phases. When the three phases are not connected correctly, the phase sequencer operates, and the unit will not start.

This device is located in the control box of the outdoor unit.

The following table shows the LED indicator light for phase sequencer under normal operation and fault conditions.

LED / Description	PW (Red)	P_R (Yellow)	P_S (Yellow)	P_T (Yellow)	Actions
Normal Operation	○	●	●	●	-
Reverse Phase	◑	◑	◑	◑	Switch off the unit. Check the 3 phase wiring.
T Phase Missing	◑	●	●	◑	Switch off the unit. Check the 3 phase wiring.
S Phase Missing	◑	●	◑	●	Switch off the unit. Check the 3 phase wiring.
R Phase Missing	●	●	●	●	Switch off the unit. Check the 3 phase wiring.
S & T Phase Missing*	◑	●	◑	◑	Switch off the unit. Check the 3 phase wiring.
Overload*	◑	●	●	●	High discharge temperature. Check refrigerant system.
Sensor Missing*	◑	○	○	○	Switch off the unit. Plug in sensor.

○ ON ● OFF ◑ BLINK

Note:
1. “ * ” indicates additional function for PP01 phase sequencer.
2. When R phase missing, no LED or buzzer will indicate the error, but relay 71 (COMMON) and 81 (NO) will cut off.
3. The unit will check discharge sensor availability only during power up.
4. All errors can only recover through manually reset.

DAIKIN_FFRN.indb 67 12/27/2012 9:28:17 AM

Error Code / Fault Condition

When a malfunction of the air conditioner unit is detected, immediately switch off the main power supply before proceeding with the following troubleshooting procedures.
The following are common fault conditions and simple troubleshooting tips. If any other fault conditions which are not listed occur, contact your nearest local dealer. DO NOT attempt to troubleshoot the unit by yourself.

No	Fault conditions	Possible causes / corrective actions
1	The air conditioner unit will not resume after power failure.	• The auto restart function is not functioning. Please turn on the unit with the wireless / wired controller.
2	The compressor does not operate 3 minutes after the air conditioner unit is started.	• Protection against frequent starting. • Wait for 3 or 4 minutes for the compressor to start operating by itself.
3	The airflow is too slow or room cannot be cooled sufficiently.	• The air filter is dirty. • The doors and windows are opened. • The air suction and discharge of both indoor and outdoor units are clogged or blocked. • The regulated temperature or temperature setting is not low enough.
4	Discharge airflow has bad odor.	• Cigarettes, smoke particles, perfume and others, which might have adhered onto the coil, may cause odor. • Contact your nearest dealer.
5	Condensation on the front air grille of the indoor unit.	• This is caused by air humidity after an extended period of operation. • The set temperature is too low. Increase the temperature setting and operate the unit at high fan speed.
6	Water flowing out from the air conditioner.	• Switch off the unit and contact your nearest dealer. This might be due to tilted installation.
7	Hissing airflow sound from the air conditioner unit during operation.	• Liquid refrigerant flowing into the evaporator coil.
8	The wireless controller display is dim.	• The batteries are discharged. • The batteries are not correctly inserted. • The assembly is not good.
9	Compressor operates continuously.	• Dirty air filter. Clean the air filter. • Temperature setting too low (cooling). Use higher temperature setting. • Temperature setting too high (heating). Use lower temperature setting.
10	No cool air comes out during cooling cycle, or no hot air comes out during heating cycle.	• Temperature setting too high (cooling). Use lower temperature setting. • Temperature setting too low (heating). Use higher temperature setting.
11	On heating cycle, warm air does not come out.	• Unit is in defrost mode. Heating operation will resume after defrost cycle ends.

DAIKIN_FFRN.indb 68 12/27/2012 9:28:17 AM

Diagnostic Guidelines

By means of pressure readings:

Data / Circuit	Pressure					Probable cause
	Too low	A little low	Normal	A little high	Too high	
High side **Low side**					• •	1. Overcharged with refrigerant. 2. Non-condensable gases in refrigerant circuit (e.g. air). 3. Obstructed air-intake / discharge. 4. Hot air short circuiting in outdoor unit.
High side **Low side**	•				•	1. Poor compression /no compression (compressor defective) 2. Reversing valve leaking.
High side **Low side**	•	•				1. Undercharged with refrigerant. 2. Refrigerant leakage. 3. Air filter clogged / dirty (indoor unit). 4. Indoor fan locked / seized. 5. Defective defrost control, outdoor coil freeze up (heating). 6. Outdoor fan locked / seized (heating).
High side **Low side**				•	•	1. Outdoor fan blocked (cooling). 2. Outdoor coil dirty (cooling). 3. Indoor fan locked / seized (heating). 4. Indoor air filter clogged / dirty (heating). 5. Non-condensable gases in refrigerant circuit (e.g. air).
High side **Low side**				•	•	1. Air intake temperature of indoor unit too high.

DAIKIN_FFRN.indb 69 12/27/2012 9:28:17 AM