User reference guide

Split system air conditioners

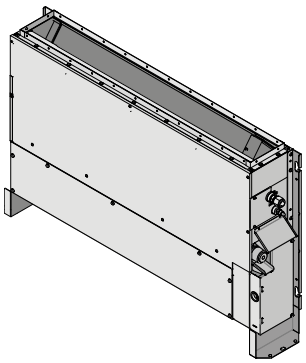

FNA25A2VEB
FNA35A2VEB
FNA50A2VEB
FNA60A2VEB

User reference guide
Split system air conditioners

English

Table of Contents

1 General safety precautions 2
1.1 About the documentation 2
1.1.1 Meaning of warnings and symbols 2
1.2 For the user 2
2 About this document 3
3 About the system 3
3.1 Components 3
3.2 Combining units and options 4
3.2.1 Possible options for the indoor unit 4
3.3 Information related to units using R32 refrigerant 4
4 User interface 4
5 Before operation 4
6 Operation 5
6.1 Operation range 5
7 Energy saving and optimum operation 6
8 Maintenance and service 6
8.1 Overview: Maintenance and service 6
8.2 Cleaning the air filter, suction grille, air outlet and outside panels 7
8.2.1 To clean the drain pan 7
8.2.2 To clean the air outlet and outside panels 7
8.2.3 To clean the air filter 7
8.3 After-sales service and warranty 7
8.3.1 Warranty period 7
8.3.2 Recommended maintenance and inspection 7
8.3.3 Recommended maintenance and inspection cycles 8
9 Troubleshooting 8
9.1 Symptoms that are NOT system malfunctions 9
9.1.1 Symptom: The system does not operate 9
9.1.2 Symptom: White mist comes out of a unit (Indoor unit) 10
9.1.3 Symptom: Dust comes out of the unit 10
9.1.4 Symptom: The units can give off odours 10
9.1.5 Symptom: The operation stopped suddenly (Operation lamp is on) 10
9.1.6 Symptom: The outdoor fan rotates while the air conditioner is not in operation 10
9.1.7 Symptom: The heating operation stops suddenly and a flowing sound is heard 10
10 Relocation 10
11 Disposal 10
12 Glossary 10

1 General safety precautions

1.1 About the documentation

- The original documentation is written in English. All other languages are translations.
- The precautions described in this document cover very important topics, follow them carefully.
- The installation of the system, and all activities described in the installation manual and the installer reference guide must be performed by an authorised installer.

1.1.1 Meaning of warnings and symbols

DANGER
Indicates a situation that results in death or serious injury.

DANGER: RISK OF ELECTROCUTION
Indicates a situation that could result in electrocution.

DANGER: RISK OF BURNING
Indicates a situation that could result in burning because of extreme hot or cold temperatures.

DANGER: RISK OF EXPLOSION
Indicates a situation that could result in explosion.

WARNING
Indicates a situation that could result in death or serious injury.

WARNING: FLAMMABLE MATERIAL

CAUTION
Indicates a situation that could result in minor or moderate injury.

NOTICE
Indicates a situation that could result in equipment or property damage.

INFORMATION
Indicates useful tips or additional information.

Symbol	Explanation
	Before installation, read the installation and operation manual, and the wiring instruction sheet.
	Before performing maintenance and service tasks, read the service manual.
	For more information, see the installer and user reference guide.

1.2 For the user

- If you are not sure how to operate the unit, contact your installer.
- This appliance can be used by children aged from 8 years and above and persons with reduced physical, sensory or mental capabilities or lack of experience and knowledge if they have been given supervision or instruction concerning use of the appliance in a safe way and understand the hazards involved. Children shall not play with the appliance. Cleaning and user maintenance shall not be made by children without supervision.

WARNING
To prevent electric shocks or fire:
- Do NOT rinse the unit.
- Do NOT operate the unit with wet hands.
- Do NOT place any objects containing water on the unit.

NOTICE
- Do NOT place any objects or equipment on top of the unit.
- Do NOT sit, climb or stand on the unit.

- Units are marked with the following symbol:

This means that electrical and electronic products may not be mixed with unsorted household waste. Do NOT try to dismantle the system yourself: the dismantling of the system, treatment of the refrigerant, of oil and of other parts must be done by an authorized installer and must comply with applicable legislation.
Units must be treated at a specialized treatment facility for reuse, recycling and recovery. By ensuring this product is disposed of correctly, you will help to prevent potential negative consequences for the environment and human health. For more information, contact your installer or local authority.

- Batteries are marked with the following symbol:

This means that the batteries may not be mixed with unsorted household waste. If a chemical symbol is printed beneath the symbol, this chemical symbol means that the battery contains a heavy metal above a certain concentration.
Possible chemical symbols are: Pb: lead (>0.004%).
Waste batteries must be treated at a specialized treatment facility for reuse. By ensuring waste batteries are disposed of correctly, you will help to prevent potential negative consequences for the environment and human health.

2 About this document

Thank you for purchasing this product. Please:

- Read the documentation carefully before operating the user interface to ensure the best possible performance.
- Keep the documentation for future reference.

Target audience

End users

INFORMATION

This appliance is intended to be used by expert or trained users in shops, in light industry, and on farms, or for commercial and household use by lay persons.

Documentation set

This document is part of a documentation set. The complete set consists of:

- **General safety precautions:**
  - Safety instructions that you must read before operating your system
  - Format: Paper (in the box of the indoor unit)
- **Operation manual:**
  - Quick guide for basic usage
  - Format: Paper (in the box of the indoor unit)
- **User reference guide:**
  - Detailed step-by-step instructions and background information for basic and advanced usage
  - Format: Digital files on http://www.daikineurope.com/support-and-manuals/product-information/

Latest revisions of the supplied documentation may be available on the regional Daikin website or via your installer.

The original documentation is written in English. All other languages are translations.

3 About the system

INFORMATION

The sound pressure level is less than 70 dBA.

WARNING: FLAMMABLE MATERIAL

The R32 refrigerant (if applicable) in this unit is mildly flammable.[1]

WARNING

- Do not modify, disassemble, remove, reinstall or repair the unit yourself as incorrect dismantling or installation may cause an electric shock or fire. Contact your dealer.
- In case of accidental refrigerant leaks, make sure there are no naked flames. The refrigerant itself is entirely safe and non-toxic. R410A is a non-combustible refrigerant, and R32 is a mildly flammable refrigerant, but they will generate a toxic gas when they accidentally leak into a room where combustible air from fan heaters, gas cookers, etc. is present. Always have qualified service personnel confirm that the point of leakage has been repaired or corrected before resuming operation.

WARNING

Ask your dealer to install and reinstall the air conditioner. Incomplete installation may result in a water leakage, electric shock, and fire.

NOTICE

Improper installation or attachment of equipment or accessories could result in electric shock, short-circuit, leaks, fire or other damage to the equipment. Only use accessories, optional equipment and spare parts made or approved by Daikin.

3.1 Components

INFORMATION

The following illustration is an example and might NOT match your system layout.

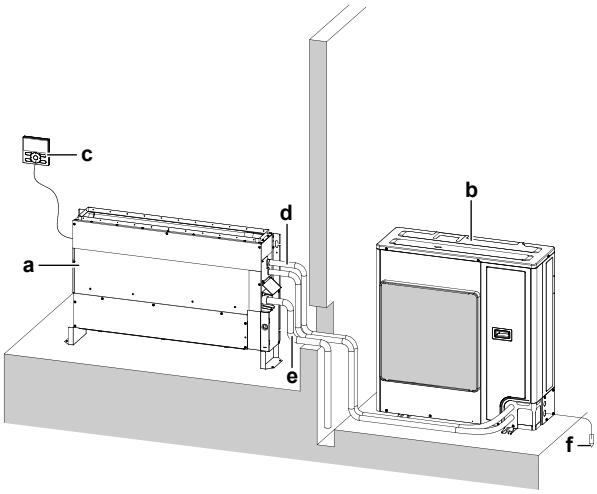

a Indoor unit
b Outdoor unit

[1] Only for units using R32 refrigerant. Refer to the outdoor unit specifications for the type of refrigerant to be used.

- **c** User interface
- **d** Refrigerant piping and electric wiring
- **e** Drain pipe
- **f** Earth wire to ground outdoor unit to prevent electric shocks.

CAUTION

Do not insert fingers, rods or other objects into the air inlet or outlet. Do not remove the fan guard. When the fan is rotating at high speed, it will cause injury.

CAUTION

NEVER touch the internal parts of the controller.

Do NOT remove the front panel. Some parts inside are dangerous to touch and appliance problems may happen. For checking and adjusting the internal parts, contact your dealer.

NOTICE

Do not wipe the controller operation panel with benzine, thinner, chemical dust cloth, etc. The panel may get discoloured or the coating peeled off. If it is heavily dirty, soak a cloth in water-diluted neutral detergent, squeeze it well and wipe the panel clean. Wipe it with another dry cloth.

NOTICE

Never press the button of the user interface with a hard, pointed object. The user interface may be damaged.

NOTICE

Never pull or twist the electric wire of the user interface. It may cause the unit to malfunction.

3.2 Combining units and options

3.2.1 Possible options for the indoor unit

Make sure you have the following mandatory options:

- User interface: Wired or wireless

Select a user interface in accordance with the customer's request. Refer to the table below to select a suitable user interface.

User interface	
Wired user interface	BRC1D52/BRC1D61/ BRC1E51A/BRC1E53A7/ BRC1E53B7/BRC1E53C7
Wireless user interface	BRC4C65

3.3 Information related to units using R32 refrigerant

WARNING

Never use a flammable spray such as hair spray, lacquer or paint near the unit. It may cause a fire, or, in case of R32 refrigerant, misdetection by the refrigerant leakage sensor.[1]

CAUTION

Do NOT turn off the breaker, unless you smell something burning, or during a short repair period, inspection, or cleaning of the unit. Otherwise, refrigerant leakage cannot be detected.[1]

CAUTION

Do NOT install or use in highly airtight spaces, e.g. soundproof chambers or rooms with sealed doors.[1]

CAUTION

This unit is equipped with electrically powered safety measures, such as a refrigerant leak detector. In order to be effective, the unit must be electrically powered at all times after installation, except for short service periods.[1]

CAUTION

Do NOT install or use in places filled with smoke, gas, chemicals etc. Sensors inside the indoor unit may detect these substances, and display a refrigerant leak abnormality.[1]

4 User interface

CAUTION

NEVER touch the internal parts of the controller.

Do NOT remove the front panel. Some parts inside are dangerous to touch and appliance problems may happen. For checking and adjusting the internal parts, contact your dealer.

For more information about the user interface, see the operation manual of the installed user interface.

5 Before operation

WARNING

Ask your dealer for improvement, repair, and maintenance. Incomplete improvement, repair, and maintenance may result in water leakage, electric shock and fire.

WARNING

Ask your dealer to move and reinstall the air conditioner. Incomplete installation may result in a water leakage, electric shock, and fire.

WARNING

Never let the indoor unit or the user interface get wet. It may cause an electric shock or a fire.

WARNING

Do not place objects in direct proximity of the outdoor unit and do not let leaves and other debris accumulate around the unit. Leaves are a hotbed for small animals which can enter the unit. Once in the unit, such animals can cause malfunctions, smoke or fire when making contact with electrical parts.

WARNING

Avoid placing the user interface in a place where it can be splashed with water. Water entering the machine may cause an electric leak or may damage the internal electronic parts.

WARNING

This unit contains electrical and hot parts.

(1) Only for units using R32 refrigerant. Refer to the outdoor unit specifications for the type of refrigerant to be used.

WARNING

Before operating the unit, be sure the installation has been carried out correctly by an installer.

WARNING

Never use a flammable spray such as hair spray, lacquer or paint near the unit. It may cause a fire.

WARNING

Do not place a flammable spray bottle near the air conditioner and do not use sprays. Doing so may result in a fire.

WARNING

Do NOT keep flammable materials inside the unit. They may cause an explosion or a fire.

CAUTION

It is not good for your health to expose your body to the air flow for a long time.

CAUTION

To avoid oxygen deficiency, ventilate the room sufficiently if equipment with burner is used together with the system.

CAUTION

Do NOT operate the system when using a room fumigation-type insecticide. Chemicals could collect in the unit, and endanger the health of people who are hypersensitive to chemicals.

CAUTION

Never expose little children, plants or animals directly to the air flow.

CAUTION

Do not touch the heat exchanger fins. These fins are sharp and could result in cutting injuries.

NOTICE

Do not place the user interface in a place exposed to direct sunlight. The LCD display may get discoloured or fail to display the data.

NOTICE

Do not place items which might be damaged by moisture under the indoor unit. Condensation may form if the humidity is above 80%, if the drain outlet is blocked or the filter is polluted.

NOTICE

Arrange the drain hose to ensure smooth drainage. Incomplete drainage may cause the building, furniture, etc. to get wet.

This operation manual is for the following systems with standard control. Before initiating operation, contact your dealer for the operation that corresponds to your system type and mark. If your installation has a customised control system, ask your dealer for the operation that corresponds to your system.

6 Operation

6.1 Operation range

Use the system in the following temperature and humidity ranges for safe and effective operation.

Outdoor units using R410A refrigerant			
Outdoor unit		**Cooling**	**Heating**
RR71~125	Outdoor temperature	–15~46°C DB	—
	Indoor temperature	18~37°C DB 12~28°C WB	—
RQ71~125	Outdoor temperature	–5~46°C DB	–9~21°C DB –10~15°C WB
	Indoor temperature	18~37°C DB 12~28°C WB	10~27°C DB
RXS25~60	Outdoor temperature	–10~46°C DB	–15~24°C DB –16~18°C WB
	Indoor temperature	18~32°C DB	10~30°C DB
3MXS40~68 4MXS68~80 5MXS90	Outdoor temperature	–10~46°C DB	–15~24°C DB –16~18°C WB
	Indoor temperature	18~32°C DB	10~30°C DB
RZQG71~140	Outdoor temperature	–15~50°C DB	–19~21°C DB –20~15.5°C WB
	Indoor temperature	18~37°C DB 12~28°C WB	10~27°C DB
RZQSG71~140	Outdoor temperature	–15~46°C DB	–14~21°C DB –15~15.5°C WB
	Indoor temperature	20~37°C DB 14~28°C WB	10~27°C DB
RZQ200~250	Outdoor temperature	–5~46°C DB	–14~21°C DB –15~15°C WB
	Indoor temperature	20~37°C DB 14~28°C WB	10~27°C DB
Indoor humidity		≤80%[(a)]	

Outdoor units using R32 refrigerant			
Outdoor unit		**Cooling**	**Heating**
RXM25~60	Outdoor temperature	–10~46°C DB	–15~24°C DB –16~18°C WB
	Indoor temperature	18~32°C DB	10~30°C DB
3MXM40~68 4MXM68~80 5MXM90	Outdoor temperature	–10~46°C DB	–15~24°C DB –16~18°C WB
	Indoor temperature	18~32°C DB	10~30°C DB
RZAG71~140	Outdoor temperature	–20~52°C DB	–19.5~21°C DB –20~15.5°C WB
	Indoor temperature	18~37°C DB 12~28°C WB	10~27°C DB

Outdoor units using R32 refrigerant			
Outdoor unit		Cooling	Heating
RZASG71~140	Outdoor temperature	–15~46°C DB	–14~21°C DB –15~15.5°C WB
	Indoor temperature	20~37°C DB 14~28°C WB	10~27°C DB
Indoor humidity		≤80%[(a)]	

(a) To avoid condensation and water dripping out of the unit. If the temperature or the humidity is beyond these conditions, safety devices may be put in action and the air conditioner may not operate.

7 Energy saving and optimum operation

CAUTION

This unit is equipped with electrically powered safety measures, such as a refrigerant leak detector. In order to be effective, the unit must be electrically powered at all times after installation, except for short service periods.[1]

Observe the following precautions to ensure the system operates properly.

- Adjust the room temperature properly for a comfortable environment. Avoid excessive heating or cooling.
- Prevent direct sunlight from entering a room during cooling operation by using curtains or blinds.
- Ventilate often. Extended use requires special attention to ventilation.
- Keep doors and windows closed. If the doors and windows remain open, air will flow out of your room causing a decrease in the cooling or heating effect.
- Be careful not to cool or heat too much. To save energy, keep the temperature setting at a moderate level.
- Never place objects near the air inlet or the air outlet of the unit. It may cause deterioration in the effect or stop the operation.
- When the display shows (time to clean the air filter), clean the filters (see "8.2.3 To clean the air filter" on page 7).
- Keep the indoor unit and user interface at least 1 m away from televisions, radios, stereos, and other similar equipment. Failing to do so may cause static or distorted pictures.
- Do NOT place items under the indoor unit, as they may be damaged by water.
- Condensation may form if the humidity is above 80% or if the drain outlet gets blocked.

8 Maintenance and service

8.1 Overview: Maintenance and service

The installer has to perform a yearly maintenance.

About the refrigerant

This product contains fluorinated greenhouse gases. Do NOT vent gases into the atmosphere.

Refrigerant type: R32

Global warming potential (GWP) value: 675

Refrigerant type: R410A

Global warming potential (GWP) value: 2087.5

NOTICE

In Europe, the **greenhouse gas emissions** of the total refrigerant charge in the system (expressed as tonnes CO_2-equivalent) is used to determine the maintenance intervals. Follow the applicable legislation.

Formula to calculate the greenhouse gas emissions: GWP value of the refrigerant × Total refrigerant charge [in kg] / 1000

Please contact your installer for more information.

WARNING

R410A is a non-combustible refrigerant, and R32 is a mildly flammable refrigerant; they normally don't leak. If the refrigerant leaks in the room and comes in contact with fire from a burner, a heater, or a cooker, this may result in a fire (in case of R32), or the formation of a harmful gas.

Turn off any combustible heating devices, ventilate the room, and contact the dealer from where you purchased the unit.

Do not use the unit until a service person confirms that the part from which the refrigerant leaked has been repaired.

WARNING

- Do NOT pierce or burn refrigerant cycle parts.
- Do NOT use cleaning materials or means to accelerate the defrosting process other than those recommended by the manufacturer.
- Be aware that the refrigerant inside the system is odourless.

NOTICE

Maintenance MUST be done by an authorized installer or service agent.

We recommend performing maintenance at least once a year. However, applicable legislation might require shorter maintenance intervals.

DANGER: RISK OF ELECTROCUTION

To clean the air conditioner or air filter, be sure to stop operation and turn all power supplies off. Otherwise, an electric shock and injury may result.

- In case the unit is equipped with a refrigerant leakage sensor, turn the power supply breaker back on immediately after cleaning in order to maintain detection functionality.

WARNING

To prevent electric shocks or fire:

- Do NOT rinse the unit.
- Do NOT operate the unit with wet hands.
- Do NOT place any objects containing water on the unit.

CAUTION

After a long use, check the unit stand and fitting for damage. If damaged, the unit may fall and result in injury.

CAUTION

Do not touch the heat exchanger fins. These fins are sharp and could result in cutting injuries.

(1) Only for units using R32 refrigerant. Refer to the outdoor unit specifications for the type of refrigerant to be used.

NOTICE

When cleaning the heat exchanger, make sure to remove the switch box and fan motor. Water or detergent might deteriorate the insulation of electronic components and result in burnout of these components.

WARNING

Be carefull with ladders when working in high places.

8.2 Cleaning the air filter, suction grille, air outlet and outside panels

8.2.1 To clean the drain pan

Clean the drain pan so that it does NOT become clogged and dusty.

Cover the drain pan to prevent dust from entering it.

8.2.2 To clean the air outlet and outside panels

WARNING

Do NOT let the indoor unit get wet. **Possible consequence:** Electric shock or fire.

NOTICE

- Do NOT use gasoline, benzene, thinner polishing powder or liquid insecticide. **Possible consequence:** Discoloration and deformation.
- Do NOT use water or air of 50°C or higher. **Possible consequence:** Discoloration and deformation.
- Do NOT scrub firmly when washing the blade with water. **Possible consequence:** The surface sealing peels off.

Clean with a soft cloth. If it is difficult to remove stains, use water or neutral detergent.

8.2.3 To clean the air filter

When to clean the air filter:

- Rule of thumb: Clean every 6 months. If the air in the room is extremely contaminated, increase the cleaning frequency.
- Depending on the settings, the user interface can display the **TIME TO CLEAN AIR FILTER** notification. Clean the air filter when the notification is displayed.
- If the dirt becomes impossible to clean, change the air filter (= optional equipment).

How to clean the air filter:

1. Turn OFF the power.
2. **Remove the air filter.** Push the hooks and pull the filter as shown in the illustration below. (2 hooks for 25 and 35 type or 3 hooks for 50 and 60 type)

front suction bottom suction

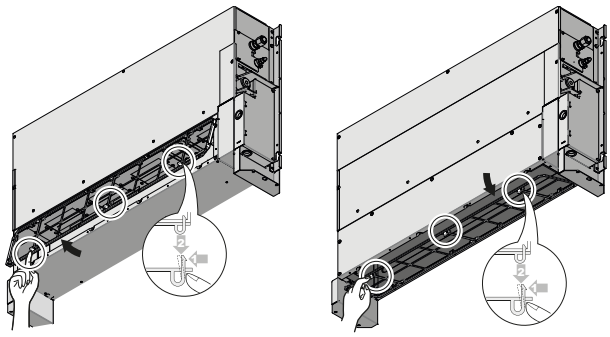

3. **Clean the air filter.** Use a vacuum cleaner or wash with water. If the air filter is very dirty, use a soft brush and neutral detergent.

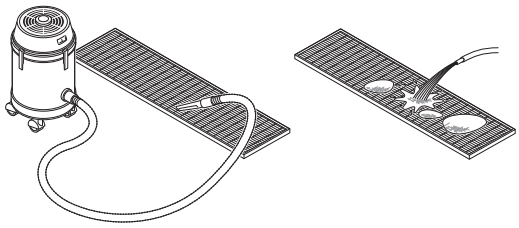

4. **Dry the air filter in the shadow.**
5. **Reattach the air filter.** Hook the filter behind the flap and attach the filter to the main unit while pushing down the hooks.

front suction bottom suction

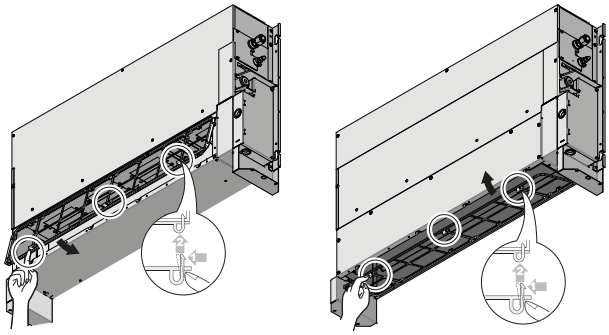

6. Turn ON the power.
7. Press the **FILTER SIGN RESET** button.

Result: The **TIME TO CLEAN AIR FILTER** notification disappears from the user interface.

8.3 After-sales service and warranty

8.3.1 Warranty period

- This product includes a warranty card that was filled in by the dealer at the time of installation. The completed card has to be checked by the customer and stored carefully.
- If repairs to the product are necessary within the warranty period, contact your dealer and keep the warranty card at hand.

8.3.2 Recommended maintenance and inspection

Since dust collects when using the unit for several years, performance of the unit will deteriorate to some extent. As taking apart and cleaning interiors of units requires technical expertise and in order to ensure the best possible maintenance of your units, we recommend to enter into a maintenance and inspection contract on top of normal maintenance activities. Our network of dealers has access to a permanent stock of essential components in order to keep your unit in operation as long as possible. Contact your dealer for more information.

When asking your dealer for an intervention, always state:

- The complete model name of the unit.
- The manufacturing number (stated on the nameplate of the unit).
- The installation date.
- The symptoms or malfunction, and details of the defect.

WARNING

- Do not modify, disassemble, remove, reinstall or repair the unit yourself as incorrect dismantling or installation may cause an electric shock or fire. Contact your dealer.
- In case of accidental refrigerant leaks, make sure there are no naked flames. The refrigerant itself is entirely safe and non-toxic. R410A is a non-combustible refrigerant, and R32 is a mildly flammable refrigerant, but they will generate a toxic gas when they accidentally leak into a room where combustible air from fan heaters, gas cookers, etc. is present. Always have qualified service personnel confirm that the point of leakage has been repaired or corrected before resuming operation.

8.3.3 Recommended maintenance and inspection cycles

Be aware that the mentioned maintenance and replacement cycles do not relate to the warranty period of the components.

Component	Inspection cycle	Maintenance cycle (replacements and/or repairs)
Electric motor	1 year	20,000 hours
PCB		25,000 hours
Heat exchanger		5 years
Sensor (thermistor, etc.)		5 years
User interface and switches		25,000 hours
Drain pan		8 years
Expansion valve		20,000 hours
Solenoid valve		20,000 hours

The table assumes the following conditions of use:

- Normal use without frequent starting and stopping of the unit. Depending on the model, we recommend not starting and stopping the machine more than 6 times/hour.
- Operation of the unit is assumed to be 10 hours/day and 2,500 hours/year.

NOTICE

- The table indicates main components. Refer to your maintenance and inspection contract for more details.
- The table indicates recommended intervals of maintenance cycles. However, in order to keep the unit operational as long as possible, maintenance work may be required sooner. Recommended intervals can be used for appropriate maintenance design in terms of budgeting maintenance and inspection fees. Depending on the content of the maintenance and inspection contract, inspection and maintenance cycles may in reality be shorter than listed.

9 Troubleshooting

If one of the following malfunctions occur, take the measures shown below and contact your dealer.

WARNING

Stop operation and shut off the power if anything unusual occurs (burning smells etc.).

Leaving the unit running under such circumstances may cause breakage, electric shock or fire. Contact your dealer.

WARNING

In case the unit is equipped with a refrigerant leakage sensor[1], turn off the unit using the ON/OFF button on the user interface only.

The system must be repaired by a qualified service person:

Malfunction	Measure
If a safety device such as a fuse, a breaker or an earth leakage breaker frequently actuates or the ON/OFF switch does not function properly.	Turn off the main power switch. In case of R32 refrigerant, turn off the power using the ON/OFF button on the user interface only and contact your dealer.
If water leaks from the unit.	Stop operation.
The operation switch does not function properly..	Turn off the main power switch. In case of R32 refrigerant, turn off the power using the ON/OFF button on the user interface only and contact your dealer.
If the user interface display indicates the unit number, the operation lamp flashes and an error code appears.	Notify your installer and report the error code.

If the system does not properly operate except for the above mentioned cases and none of the above mentioned malfunctions is evident, investigate the system according to the following procedures.

Malfunction	Measure
If the system does not operate at all.	▪ Check if there is no power failure. Wait until power is restored. If a power failure occurs during operation, the system automatically restarts immediately after power is restored. ▪ Check if no fuse has blown or breaker is activated. Change the fuse or reset the breaker if necessary. ▪ Are batteries set in the remote controller? ▪ Is the timer setting correct?

(1) Only for units using R32 refrigerant. Refer to the outdoor unit specifications for the type of refrigerant to be used.

Malfunction	Measure
The system operates, but cooling or heating is insufficient.	▪ Check if air inlet or outlet of outdoor or indoor unit is not blocked by obstacles. Remove any obstacles and make sure the air can flow freely. ▪ Check if the air filter is clogged. Contact your dealer to clean the air filter. ▪ Check the temperature setting. Refer to the manual of the user interface. ▪ Check if the air flow angle is proper. Refer to the manual of the user interface. ▪ Check the fan speed setting is set to low speed. Refer to the manual of the user interface. ▪ Check for open doors or windows. Close doors and windows to prevent wind from coming in. ▪ Check if direct sunlight enters the room. Use curtains or blinds. ▪ If the heat source of the room is excessive (when cooling). Cooling effect decreases if heat gain of the room is too large. ▪ Check if there are too many occupants in the room during cooling operation. Check if the heat source of the room is excessive.
Operation stops suddenly. (Operation lamp blinks.)	▪ Check if the air filter is clogged. Contact your dealer to clean the air filter (refer to "Maintenance" in the indoor unit manual). ▪ Check if air inlet or outlet of outdoor or indoor unit is not blocked by obstacles. Remove any obstacles, turn the breaker OFF and back ON. If the lamp still blinks, contact your dealer. ▪ Check if all indoor units connected to outdoor unit in the multi-system are operating in the same mode.
An abnormal function happens during operation.	▪ The air conditioner may malfunction because of lightning or radio waves. Turn the breaker OFF and back ON.

▪ In case of refrigerant leakage sensor:[1]

Malfunction	Measure
The fan is rotates, even when the unit is turned off. (Operation lamp blinks)	**Refrigerant leakage sensor started working:** ▪ If the error code "AO" is shown on the user interface display, there may be refrigerant leakage. Ventilate the room and contact your dealer. ▪ If the error code"AO" is NOT shown on the user interface display, there is no refrigerant leakage or detection is still going. If no leak is detected, the fan will turn off automatically after a few minutes. Sometimes the refrigerant leakage sensor mistakenly detects other substances than refrigerant, e.g. insecticides or hairspray.
The unit does not heat or cool and the ventilation setting has switched to "Strong air flow". (Operation lamp blinks)	
The fan of the indoor or outdoor unit rotates, even when the unit is turned off.	
The error code "AO" is shown on the user interface display.	

Malfunction	Measure
The error code "CH" is shown on the user interface display.	▪ Malfunction of refrigerant leakage sensor. ▪ Cable of refrigerant leakage sensor is broken. ▪ Cable connection of refrigerant leakage sensor is not complete. ▪ Malfunction of main printed circuit board. Contact your dealer.

▪ Error codes for refrigerant leakage sensor.[1] The code indication changes as shown below and a long beep sound is heard.

Main code	Contents
AO	Refrigerant leak detected.
CH	Abnormality of refrigerant leakage sensor.

If after checking all above items, it is impossible to fix the problem yourself, contact your installer and state the symptoms, the complete model name of the unit (with manufacturing number if possible) and the installation date (possibly listed on the warranty card).

9.1 Symptoms that are NOT system malfunctions

The following symptoms are NOT system malfunctions:

9.1.1 Symptom: The system does not operate

▪ The air conditioner does not start immediately after the ON/OFF button on the user interface is pressed. If the operation lamp lights, the air conditioner is in normal condition. It does not restart immediately because one of its safety devices actuates to prevent the air conditioner from being overloaded. The air conditioner will turn on again automatically after 3 minutes.

▪ The air conditioner does not start immediately after the power supply is turned on. Wait 1 minute until the microcomputer is prepared for operation.

▪ The air conditioner does not restart immediately when the temperature setting button is returned to its former position after pushing. It does not restart immediately because one of its safety devices actuates to prevent the air conditioner from being overloaded. The air conditioner will turn on again automatically after 3 minutes.

▪ The outdoor unit has stopped. This is because the room temperature has reached the set temperature. The unit switches to fan operation. "" (external control icon) is displayed on the user interface and the actual operation is different from the user interface setting. For multi-split models, the microcomputer executes the following control depending on the operation mode of other indoor units.

▪ The fan speed is different from the setting. Pressing the fan speed control button does not change the fan speed. When the room temperature reaches the set temperature in heating mode or the unit's maximum capacity is reached, the outdoor unit will stop operation and the indoor unit will operate in fan only mode (low fan speed). In case of multi-split, the indoor unit alternately operates in fan stop mode and fan only mode (LL= low fan speed). This is to prevent the cool air from being blown directly onto anyone present in the room.

(1) Only for units using R32 refrigerant. Refer to the outdoor unit specifications for the type of refrigerant to be used.

9.1.2 Symptom: White mist comes out of a unit (Indoor unit)

- When humidity is high during cooling operation (in oily and dusty places). If the interior of an indoor unit is extremely contaminated, the temperature distribution inside a room becomes uneven. It is necessary to clean the interior of the indoor unit. Ask your dealer for details on cleaning the unit. This operation requires a qualified service person.
- When the air conditioner is changed over to heating operation after defrost operation. Moisture generated by defrost becomes steam and exits.

9.1.3 Symptom: Dust comes out of the unit

When the unit is used for the first time in a long time. This is because dust has gotten into the unit.

9.1.4 Symptom: The units can give off odours

The unit can absorb the smell of rooms, furniture, cigarettes, etc., and then emit it again.

9.1.5 Symptom: The operation stopped suddenly (Operation lamp is on)

The air conditioner may stop for system protection due to large voltage fluctuation. It automatically resumes operation after about 3 minutes.

9.1.6 Symptom: The outdoor fan rotates while the air conditioner is not in operation

- **After operation has stopped.** The outdoor fan continues to rotate for another 30 seconds for system protection.
- **While the air conditioner is not in operation.** When the outdoor temperature is very high, the outdoor fan starts to rotate for system protection.

9.1.7 Symptom: The heating operation stops suddenly and a flowing sound is heard

The system is removing frost on the outdoor unit. You should wait for about 3 to 8 minutes.

10 Relocation

Contact your dealer for removing and reinstalling the total unit. Moving units requires technical expertise.

11 Disposal

This unit uses hydrofluorocarbon. Contact your dealer when discarding this unit.

NOTICE

Do not try to dismantle the system yourself: the dismantling of the system, treatment of the refrigerant, oil and other parts must comply with applicable legislation. Units must be treated at a specialised treatment facility for reuse, recycling and recovery.

12 Glossary

DHW = Domestic hot water
Hot water used, in any type of building, for domestic purposes.

LWT = Leaving water temperature
Water temperature at the water outlet of the heat pump.

Dealer
Sales distributor for the product.

Authorized installer
Technical skilled person who is qualified to install the product.

User
Person who is owner of the product and/or operates the product.

Applicable legislation
All international, European, national and local directives, laws, regulations and/or codes that are relevant and applicable for a certain product or domain.

Service company
Qualified company which can perform or coordinate the required service to the product.

Installation manual
Instruction manual specified for a certain product or application, explaining how to install, configure and maintain it.

Operation manual
Instruction manual specified for a certain product or application, explaining how to operate it.

Accessories
Labels, manuals, information sheets and equipment that are delivered with the product and that need to be installed according to the instructions in the accompanying documentation.

Optional equipment
Equipment made or approved by Daikin that can be combined with the product according to the instructions in the accompanying documentation.

Field supply
Equipment NOT made by Daikin that can be combined with the product according to the instructions in the accompanying documentation.

EAC

Copyright 2017 Daikin

DAIKIN INDUSTRIES CZECH REPUBLIC s.r.o.
U Nové Hospody 1/1155, 301 00 Plzeň Skvrňany, Czech Republic

DAIKIN EUROPE N.V.
Zandvoordestraat 300, B-8400 Oostende, Belgium

4P494211-1 2017.06