Installer reference guide

Daikin room air conditioner

CTXA15A2V1BW
FTXA20A2V1BW
FTXA25A2V1BW
FTXA35A2V1BW
FTXA42A2V1BW
FTXA50A2V1BW

CTXA15(A)(B)2V1BS
FTXA20(A)(B)2V1BS
FTXA25(A)(B)2V1BS
FTXA35(A)(B)2V1BS
FTXA42(A)(B)2V1BS
FTXA50(A)(B)2V1BS

CTXA15(A)(B)2V1BT
FTXA20(A)(B)2V1BT
FTXA25(A)(B)2V1BT
FTXA35(A)(B)2V1BT
FTXA42(A)(B)2V1BT
FTXA50(A)(B)2V1BT

CTXA15B2V1BB
FTXA20B2V1BB
FTXA25B2V1BB
FTXA35B2V1BB
FTXA42B2V1BB
FTXA50B2V1BB

Installer reference guide
Daikin room air conditioner

English

Table of Contents

1 General safety precautions 2
1.1 About the documentation 2
1.1.1 Meaning of warnings and symbols 2
1.2 For the installer 3
1.2.1 General 3
1.2.2 Installation site 3
1.2.3 Refrigerant 5
1.2.4 Brine 5
1.2.5 Water 5
1.2.6 Electrical 6
2 About the documentation 6
2.1 About this document 6
2.2 Installer reference guide at a glance 7
3 About the box 7
3.1 Overview: About the box 7
3.2 Indoor unit 7
3.2.1 To unpack the indoor unit 7
3.2.2 To remove the accessories from the indoor unit 7
4 About the unit 8
4.1 System layout 8
4.2 Operation range 8
4.3 About the wireless LAN adapter 8
4.3.1 Precautions when using the wireless adapter 8
4.3.2 Basic parameters 8
4.3.3 Setting the wireless adapter 8
5 Preparation 8
5.1 Overview: Preparation 8
5.2 Preparing the installation site 8
5.2.1 Installation site requirements of the indoor unit 9
5.3 Preparing refrigerant piping 9
5.3.1 Refrigerant piping requirements 9
5.3.2 Refrigerant piping insulation 9
5.4 Preparing electrical wiring 10
5.4.1 About preparing electrical wiring 10
6 Installation 10
6.1 Overview: Installation 10
6.2 Opening the indoor unit 10
6.2.1 To open the front panel 10
6.2.2 To close the front panel 10
6.2.3 To remove the front panel 10
6.2.4 To open the service cover 11
6.2.5 To remove the front grille 11
6.2.6 To re-install the front grille 11
6.2.7 To remove the electrical wiring box cover 12
6.3 Installing the indoor unit 12
6.3.1 Precautions when installing the indoor unit 12
6.3.2 To install the mounting plate 12
6.3.3 To drill a wall hole 13
6.3.4 To remove the pipe port cover 13
6.3.5 To provide drainage 13
6.4 Connecting the refrigerant piping 14
6.4.1 About connecting the refrigerant piping 14
6.4.2 Precautions when connecting the refrigerant piping 15
6.4.3 Guidelines when connecting the refrigerant piping 15
6.4.4 Pipe bending guidelines 15
6.4.5 To flare the pipe end 15
6.4.6 To connect the refrigerant piping to the indoor unit 16
6.5 Connecting the electrical wiring 16
6.5.1 About connecting the electrical wiring 16
6.5.2 Precautions when connecting the electrical wiring 16
6.5.3 Guidelines when connecting the electrical wiring 16
6.5.4 Specifications of standard wiring components 17
6.5.5 To connect the electrical wiring on the indoor unit 17
6.5.6 To connect optional accessories (wired user interface, central user interface, etc.) 17
6.6 Finishing the indoor unit installation 17
6.6.1 To insulate the drain piping, refrigerant piping and interconnection cable 17
6.6.2 To pass the pipes through the wall hole 18
6.6.3 To fix the unit on the mounting plate 18
6.6.4 To install the screw covers 18
7 Configuration 18
7.1 To set a different address 18
8 Commissioning 19
8.1 Overview: Commissioning 19
8.2 Checklist before commissioning 19
8.3 To perform a test run 19
8.3.1 To perform a test run using the user interface 19
9 Hand-over to the user 19
10 Disposal 19
11 Technical data 19
11.1 Wiring diagram 19
11.1.1 Unified wiring diagram legend 19
12 Glossary 20

1 General safety precautions

1.1 About the documentation

- The original documentation is written in English. All other languages are translations.
- The precautions described in this document cover very important topics, follow them carefully.
- The installation of the system, and all activities described in the installation manual and in the installer reference guide MUST be performed by an authorised installer.

1.1.1 Meaning of warnings and symbols

DANGER

Indicates a situation that results in death or serious injury.

DANGER: RISK OF ELECTROCUTION

Indicates a situation that could result in electrocution.

DANGER: RISK OF BURNING

Indicates a situation that could result in burning because of extreme hot or cold temperatures.

DANGER: RISK OF EXPLOSION

Indicates a situation that could result in explosion.

WARNING

Indicates a situation that could result in death or serious injury.

WARNING: FLAMMABLE MATERIAL

CAUTION

Indicates a situation that could result in minor or moderate injury.

NOTICE

Indicates a situation that could result in equipment or property damage.

INFORMATION

Indicates useful tips or additional information.

Symbol	Explanation
	Before installation, read the installation and operation manual, and the wiring instruction sheet.
	Before performing maintenance and service tasks, read the service manual.
	For more information, see the installer and user reference guide.

1.2 For the installer

1.2.1 General

If you are NOT sure how to install or operate the unit, contact your dealer.

NOTICE

Improper installation or attachment of equipment or accessories could result in electric shock, short-circuit, leaks, fire or other damage to the equipment. Only use accessories, optional equipment and spare parts made or approved by Daikin.

WARNING

Make sure installation, testing and applied materials comply with applicable legislation (on top of the instructions described in the Daikin documentation).

CAUTION

Wear adequate personal protective equipment (protective gloves, safety glasses,…) when installing, maintaining or servicing the system.

WARNING

Tear apart and throw away plastic packaging bags so that nobody, especially children, can play with them. Possible risk: suffocation.

DANGER: RISK OF BURNING

- Do NOT touch the refrigerant piping, water piping or internal parts during and immediately after operation. It could be too hot or too cold. Give it time to return to normal temperature. If you must touch it, wear protective gloves.
- Do NOT touch any accidental leaking refrigerant.

WARNING

Provide adequate measures to prevent that the unit can be used as a shelter by small animals. Small animals that make contact with electrical parts can cause malfunctions, smoke or fire.

CAUTION

Do NOT touch the air inlet or aluminium fins of the unit.

NOTICE

- Do NOT place any objects or equipment on top of the unit.
- Do NOT sit, climb or stand on the unit.

NOTICE

Works executed on the outdoor unit are best done under dry weather conditions to avoid water ingress.

In accordance with the applicable legislation, it might be necessary to provide a logbook with the product containing at least: information on maintenance, repair work, results of tests, stand-by periods,…

Also, at least, following information MUST be provided at an accessible place at the product:

- Instructions for shutting down the system in case of an emergency
- Name and address of fire department, police and hospital
- Name, address and day and night telephone numbers for obtaining service

In Europe, EN378 provides the necessary guidance for this logbook.

1.2.2 Installation site

- Provide sufficient space around the unit for servicing and air circulation.
- Make sure the installation site withstands the weight and vibration of the unit.
- Make sure the area is well ventilated. Do NOT block any ventilation openings.
- Make sure the unit is level.

Do NOT install the unit in the following places:

- In potentially explosive atmospheres.
- In places where there is machinery that emits electromagnetic waves. Electromagnetic waves may disturb the control system, and cause malfunction of the equipment.
- In places where there is a risk of fire due to the leakage of flammable gases (example: thinner or gasoline), carbon fibre, ignitable dust.
- In places where corrosive gas (example: sulphurous acid gas) is produced. Corrosion of copper pipes or soldered parts may cause the refrigerant to leak.
- In bathrooms.

Instructions for equipment using R32 refrigerant

If applicable.

WARNING

- Do NOT pierce or burn.
- Do NOT use means to accelerate the defrosting process or to clean the equipment, other than those recommended by the manufacturer.
- Be aware that R32 refrigerant does NOT contain an odour.

WARNING

The appliance shall be stored so as to prevent mechanical damage and in a well-ventilated room without continuously operating ignition sources (example: open flames, an operating gas appliance or an operating electric heater) and have a room size as specified below.

NOTICE

- Do NOT re-use joints which have been used already.
- Joints made in installation between parts of refrigerant system shall be accessible for maintenance purposes.

WARNING

Make sure installation, servicing, maintenance and repair comply with instructions from Daikin and with applicable legislation (for example national gas regulation) and are executed only by authorised persons.

Installation space requirements

NOTICE

- Pipework shall be protected from physical damage.
- Installation of pipework shall be kept to a minimum.

WARNING

If appliances contain R32 refrigerant, the floor area of the room in which the appliances are installed, operated and stored MUST be larger than the minimum floor area defined in table below A (m^2). This applies to:

- Indoor units **without** a refrigerant leakage sensor; in case of indoor units **with** refrigerant leakage sensor, consult the installation manual
- Outdoor units installed or stored indoors (e.g. winter garden, garage, machinery room)
- Pipework in unventilated spaces

To determine the minimum floor area

1 Determine the total refrigerant charge in the system (= factory refrigerant charge ❶ + ❷ additional refrigerant amount charged).

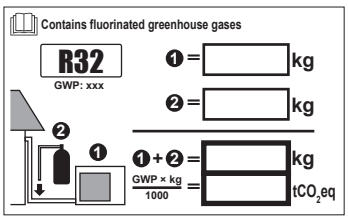

2 Determine which graph or table to use.

- For indoor units: Is the unit ceiling-mounted, wall-mounted or floor-standing?
- For outdoor units installed or stored indoors, and field piping in unventilated spaces, this depends on the installation height:

If the installation height is…	Then use the graph or table for…
<1.8 m	Floor-standing units
1.8≤x<2.2 m	Wall-mounted units
≥2.2 m	Ceiling-mounted units

3 Use the graph or table to determine the minimum floor area.

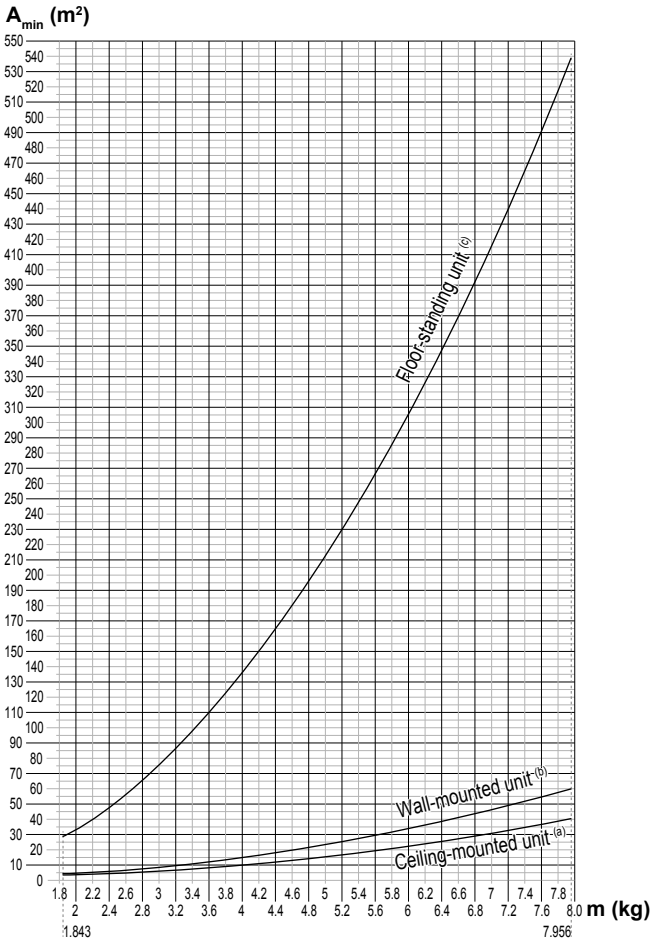

Ceiling-mounted unit(a)	
m (kg)	A_{min} (m^2)
≤1.842	—
1.843	3.64
2.0	3.95
2.2	4.34
2.4	4.74
2.6	5.13
2.8	5.53
3.0	5.92
3.2	6.48
3.4	7.32
3.6	8.20
3.8	9.14
4.0	10.1
4.2	11.2
4.4	12.3
4.6	13.4
4.8	14.6
5.0	15.8
5.2	17.1
5.4	18.5
5.6	19.9
5.8	21.3
6.0	22.8
6.2	24.3
6.4	25.9
6.6	27.6
6.8	29.3
7.0	31.0
7.2	32.8
7.4	34.7
7.6	36.6
7.8	38.5
7.956	40.1

Wall-mounted unit(b)	
m (kg)	A_{min} (m^2)
≤1.842	—
1.843	4.45
2.0	4.83
2.2	5.31
2.4	5.79
2.6	6.39
2.8	7.41
3.0	8.51
3.2	9.68
3.4	10.9
3.6	12.3
3.8	13.7
4.0	15.1
4.2	16.7
4.4	18.3
4.6	20.0
4.8	21.8
5.0	23.6
5.2	25.6
5.4	27.6
5.6	29.7
5.8	31.8
6.0	34.0
6.2	36.4
6.4	38.7
6.6	41.2
6.8	43.7
7.0	46.3
7.2	49.0
7.4	51.8
7.6	54.6
7.8	57.5
7.956	59.9

Floor-standing unit(c)	
m (kg)	A_{min} (m^2)
≤1.842	—
1.843	28.9
2.0	34.0
2.2	41.2
2.4	49.0
2.6	57.5
2.8	66.7
3.0	76.6
3.2	87.2
3.4	98.4
3.6	110
3.8	123
4.0	136
4.2	150
4.4	165
4.6	180
4.8	196
5.0	213
5.2	230
5.4	248
5.6	267
5.8	286
6.0	306
6.2	327
6.4	349
6.6	371
6.8	394
7.0	417
7.2	441
7.4	466
7.6	492
7.8	518
7.956	539

m Total refrigerant charge in the system
A_{min} Minimum floor area
(a) Ceiling-mounted unit (= Ceiling-mounted unit)
(b) Wall-mounted unit (= Wall-mounted unit)

(c) Floor-standing unit (= Floor-standing unit)

1.2.3 Refrigerant

If applicable. See the installation manual or installer reference guide of your application for more information.

NOTICE

Make sure refrigerant piping installation complies with applicable legislation. In Europe, EN378 is the applicable standard.

NOTICE

Make sure the field piping and connections are NOT subjected to stress.

WARNING

During tests, NEVER pressurize the product with a pressure higher than the maximum allowable pressure (as indicated on the nameplate of the unit).

WARNING

Take sufficient precautions in case of refrigerant leakage. If refrigerant gas leaks, ventilate the area immediately. Possible risks:

- Excessive refrigerant concentrations in a closed room can lead to oxygen deficiency.
- Toxic gas may be produced if refrigerant gas comes into contact with fire.

DANGER: RISK OF EXPLOSION

Pump down – Refrigerant leakage. If you want to pump down the system, and there is a leak in the refrigerant circuit:

- Do NOT use the unit's automatic pump down function, with which you can collect all refrigerant from the system into the outdoor unit. **Possible consequence:** Self-combustion and explosion of the compressor because of air going into the operating compressor.
- Use a separate recovery system so that the unit's compressor does NOT have to operate.

WARNING

ALWAYS recover the refrigerant. Do NOT release them directly into the environment. Use a vacuum pump to evacuate the installation.

NOTICE

After all the piping has been connected, make sure there is no gas leak. Use nitrogen to perform a gas leak detection.

NOTICE

- To avoid compressor breakdown, do NOT charge more than the specified amount of refrigerant.
- When the refrigerant system is to be opened, refrigerant MUST be treated according to the applicable legislation.

WARNING

Make sure there is no oxygen in the system. Refrigerant may only be charged after performing the leak test and the vacuum drying.

- In case recharge is required, see the nameplate of the unit. It states the type of refrigerant and necessary amount.
- The unit is factory charged with refrigerant and depending on pipe sizes and pipe lengths some systems require additional charging of refrigerant.
- Only use tools exclusively for the refrigerant type used in the system, this to ensure pressure resistance and prevent foreign materials from entering into the system.
- Charge the liquid refrigerant as follows:

If	Then
A siphon tube is present (i.e., the cylinder is marked with "Liquid filling siphon attached")	Charge with the cylinder upright.
A siphon tube is NOT present	Charge with the cylinder upside down.

- Open refrigerant cylinders slowly.
- Charge the refrigerant in liquid form. Adding it in gas form may prevent normal operation.

CAUTION

When the refrigerant charging procedure is done or when pausing, close the valve of the refrigerant tank immediately. If the valve is NOT closed immediately, remaining pressure might charge additional refrigerant. **Possible consequence:** Incorrect refrigerant amount.

1.2.4 Brine

If applicable. See the installation manual or installer reference guide of your application for more information.

WARNING

The selection of the brine MUST be in accordance with the applicable legislation.

WARNING

Take sufficient precautions in case of brine leakage. If brine leaks, ventilate the area immediately and contact your local dealer.

WARNING

The ambient temperature inside the unit can get much higher than that of the room, e.g. 70°C. In case of a brine leak, hot parts inside the unit can create a hazardous situation.

WARNING

The use and installation of the application MUST comply with the safety and environmental precautions specified in the applicable legislation.

1.2.5 Water

If applicable. See the installation manual or installer reference guide of your application for more information.

NOTICE

Make sure water quality complies with EU directive 98/83 EC.

1.2.6 Electrical

DANGER: RISK OF ELECTROCUTION

- Turn OFF all power supply before removing the switch box cover, connecting electrical wiring or touching electrical parts.
- Disconnect the power supply for more than 1 minute, and measure the voltage at the terminals of main circuit capacitors or electrical components before servicing. The voltage MUST be less than 50 V DC before you can touch electrical components. For the location of the terminals, see the wiring diagram.
- Do NOT touch electrical components with wet hands.
- Do NOT leave the unit unattended when the service cover is removed.

WARNING

If NOT factory installed, a main switch or other means for disconnection, having a contact separation in all poles providing full disconnection under overvoltage category III condition, MUST be installed in the fixed wiring.

WARNING

- ONLY use copper wires.
- Make sure the field wiring complies with the applicable legislation.
- All field wiring MUST be performed in accordance with the wiring diagram supplied with the product.
- NEVER squeeze bundled cables and make sure they do NOT come in contact with the piping and sharp edges. Make sure no external pressure is applied to the terminal connections.
- Make sure to install earth wiring. Do NOT earth the unit to a utility pipe, surge absorber, or telephone earth. Incomplete earth may cause electrical shock.
- Make sure to use a dedicated power circuit. NEVER use a power supply shared by another appliance.
- Make sure to install the required fuses or circuit breakers.
- Make sure to install an earth leakage protector. Failure to do so may cause electric shock or fire.
- When installing the earth leakage protector, make sure it is compatible with the inverter (resistant to high frequency electric noise) to avoid unnecessary opening of the earth leakage protector.

CAUTION

When connecting the power supply, the earth connection must be made before the current-carrying connections are established. When disconnecting the power supply, the current-carrying connections must be separated before the earth connection is. The length of the conductors between the power supply stress relief and the terminal block itself must be as such that the current-carrying wires are tautened before the earth wire is in case the power supply is pulled loose from the stress relief.

NOTICE

Precautions when laying power wiring:

- Do NOT connect wiring of different thicknesses to the power terminal block (slack in the power wiring may cause abnormal heat).
- When connecting wiring which is the same thickness, do as shown in the figure above.
- For wiring, use the designated power wire and connect firmly, then secure to prevent outside pressure being exerted on the terminal board.
- Use an appropriate screwdriver for tightening the terminal screws. A screwdriver with a small head will damage the head and make proper tightening impossible.
- Over-tightening the terminal screws may break them.

WARNING

- After finishing the electrical work, confirm that each electrical component and terminal inside the electrical components box is connected securely.
- Make sure all covers are closed before starting up the unit.

NOTICE

Only applicable if the power supply is three-phase, and the compressor has an ON/OFF starting method.

If there exists the possibility of reversed phase after a momentary black out and the power goes on and off while the product is operating, attach a reversed phase protection circuit locally. Running the product in reversed phase can break the compressor and other parts.

2 About the documentation

2.1 About this document

INFORMATION

Make sure that the user has the printed documentation and ask him/her to keep it for future reference.

Target audience

Authorised installers

INFORMATION

This appliance is intended to be used by expert or trained users in shops, in light industry, and on farms, or for commercial and household use by lay persons.

Documentation set

This document is part of a documentation set. The complete set consists of:

- **General safety precautions:**
  - Safety instructions that you MUST read before installing
  - Format: Paper (in the box of the indoor unit)
- **Indoor unit installation manual:**
  - Installation instructions
  - Format: Paper (in the box of the indoor unit)

- **Installer reference guide:**
  - Preparation of the installation, good practices, reference data,…
  - Format: Digital files on http://www.daikineurope.com/support-and-manuals/product-information/

Latest revisions of the supplied documentation may be available on the regional Daikin website or via your dealer.

The original documentation is written in English. All other languages are translations.

Technical engineering data

- A **subset** of the latest technical data is available on the regional Daikin website (publicly accessible).
- The **full set** of latest technical data is available on the Daikin Business Portal (authentication required).

2.2 Installer reference guide at a glance

Chapter	Description
General safety precautions	Safety instructions that you MUST read before installing
About the documentation	What documentation exists for the installer
About the box	How to unpack the units and remove their accessories
About the unit	▪ System layout ▪ Operation range ▪ About the wireless adapter
Preparation	What to do and know before going on-site
Installation	What to do and know to install the system
Configuration	What to do and know to configure the system after it is installed
Commissioning	What to do and know to commission the system after it is configured
Hand-over to the user	What to give and explain to the user
Disposal	How to dispose of the system
Technical data	Specifications of the system
Glossary	Definition of terms

3 About the box

3.1 Overview: About the box

This chapter describes what you have to do after the box with the indoor unit is delivered on-site.

It contains information about:

- Unpacking and handling the unit
- Removing the accessories from the unit

Keep the following in mind:

- At delivery, the unit MUST be checked for damage. Any damage MUST be reported immediately to the claims agent of the carrier.
- Bring the packed unit as close as possible to its final installation position to prevent damage during transport.
- When handling the unit, take into account the following:

  Fragile, handle the unit with care.

  Keep the unit upright in order to avoid damage.

- Prepare the path along which you want to bring the unit inside in advance.

3.2 Indoor unit

3.2.1 To unpack the indoor unit

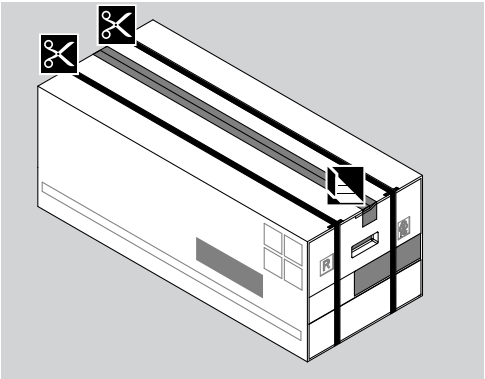

3.2.2 To remove the accessories from the indoor unit

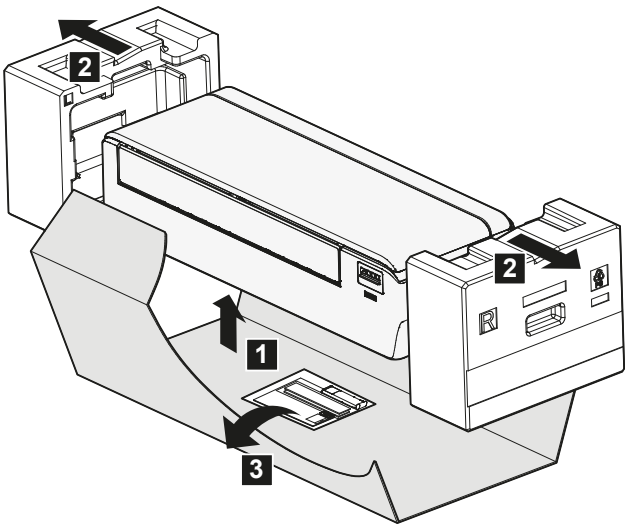

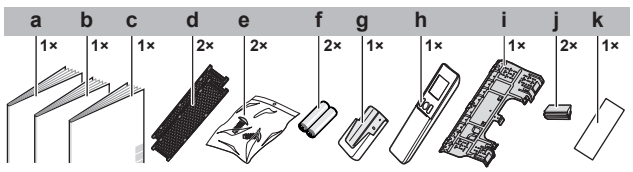

a Installation manual
b Operation manual
c General safety precautions
d Titanium apatite deodorizing filter and silver particle filter (Ag-ion filter)
e Indoor unit fixing screw (M4×12L). Refer to "6.6.3 To fix the unit on the mounting plate" [▶18].
f Dry battery AAA.LR03 (alkaline) for user interface
g User interface holder
h User interface
i Mounting plate
j Screw cover
k Spare SSID sticker with release paper (attached to the unit)

- **Spare SSID sticker.** Do NOT throw away the spare sticker. Keep it in a safe place in case it is needed in future (e.g. in case the front grille was replaced attach it to the new front grille).

4 About the unit

WARNING: FLAMMABLE MATERIAL

The refrigerant inside this unit is mildly flammable.

4.1 System layout

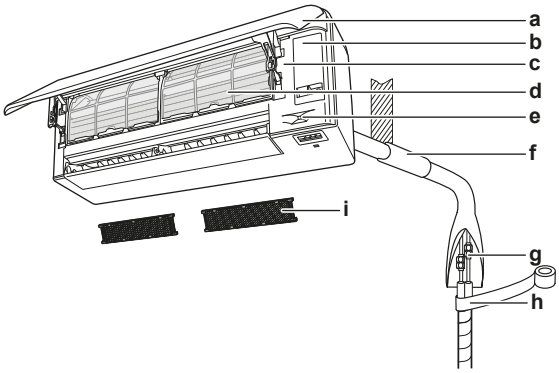

- **a** Front panel
- **b** Service cover
- **c** SSID sticker
- **d** Air filter
- **e** Intelligent eye sensor
- **f** Caulk pipe hole gap with putty
- **g** Refrigerant piping, drain hose and interconnection cable
- **h** Insulation tape
- **i** Titanium apatite deodorizing filter and silver particle filter (Ag-ion filter)

4.2 Operation range

Use the system in the following temperature and humidity ranges for safe and effective operation.

Operation mode	Operation range
Cooling[(a)(b)]	▪ Outdoor temperature: –10~46°C ▪ Indoor temperature: 18~32°C ▪ Indoor humidity: ≤80%
Heating[(a)]	▪ Outdoor temperature: –15~24°C ▪ Indoor temperature: 10~30°C
Drying[(a)]	▪ Outdoor temperature: –10~46°C ▪ Indoor temperature: 18~32°C ▪ Indoor humidity: ≤80%

If operated outside the operation range:

(a) A safety device might stop the operation of the system.

(b) Condensation might occur on the indoor unit and drip.

4.3 About the wireless LAN adapter

For detailed specifications, installation instructions, setting methods, FAQ, declaration of conformity and the latest version of this manual, visit http://www.onlinecontroller.daikineurope.com.

INFORMATION

- Daikin Industries Czech Republic s.r.o. declares that the radio equipment type inside of this unit is in compliance with Directive 2014/53/EU.
- This unit is considered as combined equipment according to the definition of Directive 2014/53/EU.

4.3.1 Precautions when using the wireless adapter

Do NOT use near:

- **Medical equipment.** E.g. persons using cardiac pacemakers or defibrillators. This product may cause electromagnetic interference.
- **Auto-control equipment.** E.g. automatic doors or fire alarm equipment. This product may cause faulty behaviour of the equipment.
- **Microwave oven.** It may affect wireless LAN communications.

4.3.2 Basic parameters

Parameter	Value
Frequency range	2400 MHz~2483.5 MHz
Radio protocol	IEEE 802.11b/g/n
Radio frequency channel	1~11
Output power	0 dBm~18 dBm
Effective radiated power	17 dBm (11b) / 13 dBm (11g) / 12 dBm (11n)
Power supply	DC 3.3 V / 500 mA

4.3.3 Setting the wireless adapter

The customer is responsible for providing:

- Smartphone or tablet with minimum supported version of Android or iOS, specified on http://www.onlinecontroller.daikineurope.com
- Internet line and communicating device such as modem, router etc.
- Wireless LAN access point.
- Installed free **Daikin Online Controller** application.

To install the Daikin Online Controller application

1. Open:
   - Google Play for appliances using Android.
   - App Store for appliances using iOS.
2. Search for **Daikin Online Controller**.
3. Follow the directions on the screen to install.

5 Preparation

5.1 Overview: Preparation

This chapter describes what you have to do and know before going on-site.

It contains information about:

- Preparing the installation site
- Preparing the refrigerant piping
- Preparing the electrical wiring

5.2 Preparing the installation site

Do NOT install the unit in places often used as work place. In case of construction works (e.g. grinding works) where a lot of dust is created, the unit MUST be covered.

Choose an installation location with sufficient space for carrying the unit in and out of the site.

WARNING

The appliance shall be stored in a room without continuously operating ignition sources (example: open flames, an operating gas appliance or an operating electric heater).

5.2.1 Installation site requirements of the indoor unit

INFORMATION

Also read the precautions and requirements in the "General safety precautions" chapter.

INFORMATION

The sound pressure level is less than 70 dBA.

- **Air flow.** Make sure nothing blocks the air flow.
- **Drainage.** Make sure condensation water can be evacuated properly.
- **Wall insulation**. When conditions in the wall exceed 30°C and a relative humidity of 80%, or when fresh air is inducted into the wall, then additional insulation is required (minimum 10 mm thickness, polyethylene foam).
- **Wall strength.** Check whether the wall or the floor is strong enough to support the weight of the unit. If there is a risk, reinforce the wall or the floor before installing the unit.

Install power cables at least 1 metre away from televisions or radios to prevent interference. Depending on the radio waves, a distance of 3 metres may NOT be sufficient.

- Choose a location where the hot/cold air discharged from the unit or the operation noise, will NOT disturb anyone.
- **Fluorescent lights**. When installing a wireless user interface in a room with fluorescent lights, mind the following to avoid interference:
  - Install the wireless user interface as close as possible to the indoor unit.
  - Install the indoor unit as far as possible from the fluorescent lights.

It is NOT recommended to install the unit in the following places because it may shorten the life of the unit:

- Where the voltage fluctuates a lot
- In vehicles or vessels
- Where acidic or alkaline vapour is present
- In places where a mineral oil mist, spray or vapour may be present in the atmosphere. Plastic parts may deteriorate and fall off or cause water leakage.
- In places where the unit would be in the path of direct sunlight.
- In bathrooms.
- Sound sensitive areas (e.g. near a bedroom), so that the operation noise will cause no trouble.

WARNING

Do NOT place objects below the indoor and/or outdoor unit that may get wet. Otherwise condensation on the unit or refrigerant pipes, air filter dirt or drain blockage may cause dripping, and objects under the unit may get dirty or damaged.

- **Spacing.** Install the unit at least 1.8 m from the floor and keep the following requirements in mind for distances from the walls and the ceiling:

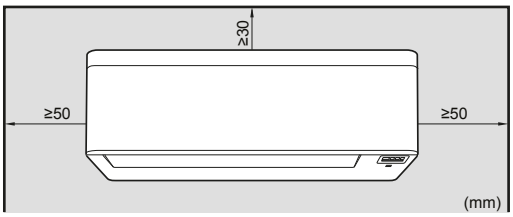

Note: Make sure that there are no obstacles within 500 mm under the signal receiver. They may influence reception performance of the user interface.

5.3 Preparing refrigerant piping

5.3.1 Refrigerant piping requirements

INFORMATION

Also read the precautions and requirements in the "General safety precautions" chapter.

NOTICE

The piping and other pressure-containing parts shall be suitable for refrigerant. Use phosphoric acid deoxidised seamless copper for refrigerant.

- Foreign materials inside pipes (including oils for fabrication) must be ≤30 mg/10 m.

Refrigerant piping diameter

Use the same diameters as the connections on the outdoor units:

Class	L1 liquid piping	L1 gas piping
15~35	Ø6.4	Ø9.5
42+50	Ø6.4	Ø12.7

Refrigerant piping material

- **Piping material:** Phosphoric acid deoxidised seamless copper.
- **Flare connections:** Only use annealed material.
- **Piping temper grade and thickness:**

Outer diameter (Ø)	Temper grade	Thickness (t)[(a)]	
6.4 mm (1/4")	Annealed (O)	≥0.8 mm	
9.5 mm (3/8")			
12.7 mm (1/2")			

(a) Depending on the applicable legislation and the unit's maximum working pressure (see "PS High" on the unit name plate), larger piping thickness might be required.

5.3.2 Refrigerant piping insulation

- Use polyethylene foam as insulation material:
  - with a heat transfer rate between 0.041 and 0.052 W/mK (0.035 and 0.045 kcal/mh°C)
  - with a heat resistance of at least 120°C
- Insulation thickness

Pipe outer diameter ($Ø_p$)	Insulation inner diameter ($Ø_i$)	Insulation thickness (t)
6.4 mm (1/4")	8~10 mm	≥10 mm
9.5 mm (3/8")	12~15 mm	
12.7 mm (1/2")	14~16 mm	

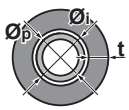

If the temperature is higher than 30°C and the humidity is higher than RH 80%, the thickness of the insulation materials should be at least 20 mm to prevent condensation on the surface of the insulation.

5.4 Preparing electrical wiring

5.4.1 About preparing electrical wiring

INFORMATION

Also read the precautions and requirements in the "General safety precautions" chapter.

WARNING

- If the power supply has a missing or wrong N-phase, equipment might break down.
- Establish proper earthing. Do NOT earth the unit to a utility pipe, surge absorber, or telephone earth. Incomplete earthing may cause electrical shock.
- Install the required fuses or circuit breakers.
- Secure the electrical wiring with cable ties so that the cables do NOT come in contact with sharp edges or piping, particularly on the high-pressure side.
- Do NOT use taped wires, stranded conductor wires, extension cords, or connections from a star system. They can cause overheating, electrical shock or fire.
- Do NOT install a phase advancing capacitor, because this unit is equipped with an inverter. A phase advancing capacitor will reduce performance and may cause accidents.

WARNING

- All wiring MUST be performed by an authorised electrician and MUST comply with the applicable legislation.
- Make electrical connections to the fixed wiring.
- All components procured on-site and all electrical construction MUST comply with the applicable legislation.

WARNING

ALWAYS use multicore cable for power supply cables.

6 Installation

6.1 Overview: Installation

This chapter describes what you have to do and know on-site to install the system.

Typical workflow

Installation typically consists of the following stages:

1 Mounting the outdoor unit.
2 Installing the indoor unit.
3 Connecting the refrigerant piping.
4 Checking the refrigerant piping.
5 Charging refrigerant.
6 Connecting the electrical wiring.
7 Finishing the outdoor installation.
8 Finishing the indoor installation.

INFORMATION

For installation of the outdoor unit (mounting the outdoor unit, connecting the refrigerant piping to the outdoor unit, charging refrigerant, connecting the electrical wiring to the outdoor unit …), see the installation manual of the outdoor unit.

6.2 Opening the indoor unit

6.2.1 To open the front panel

1 Hold the front panel on both sides and open it.

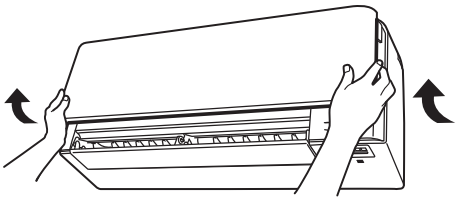

2 Pull down both locks on the back of the front panel.

3 Open the front panel until the support fits into the fixing tab.

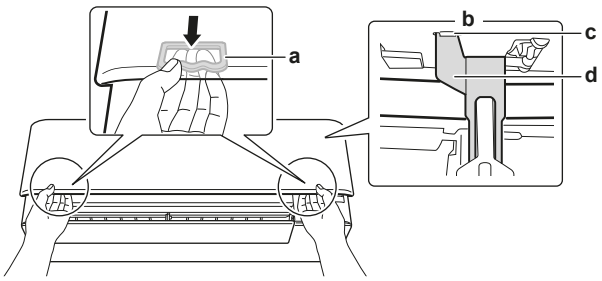

a Lock (1 on each side)
b Backside of the front panel
c Fixing tab
d Support

6.2.2 To close the front panel

1 Lift the front panel slightly and remove the support from the fixing tab.

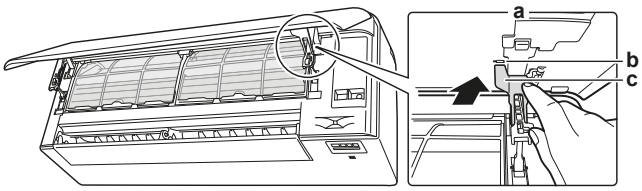

a Backside of the front panel
b Fixing tab
c Support

2 Close the front panel.

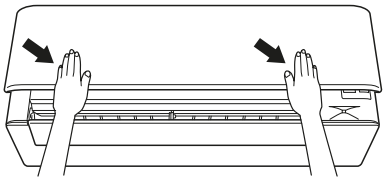

3 Gently press the front panel down until it clicks.

6.2.3 To remove the front panel

INFORMATION

Remove the front panel only in case it MUST be replaced.

1 Open the front panel. See "6.2.1 To open the front panel" [▶ 10].

2 Open the panel locks located on the back side of the panel (1 on each side).

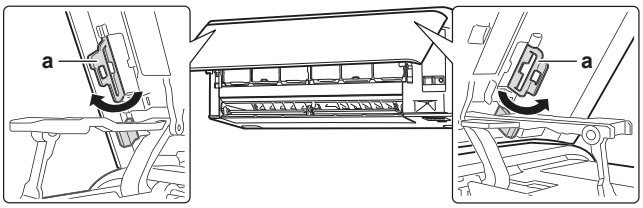

a Panel lock

3 Push the right arm lightly to the right to disconnect the shaft from the shaft slot on the right side.

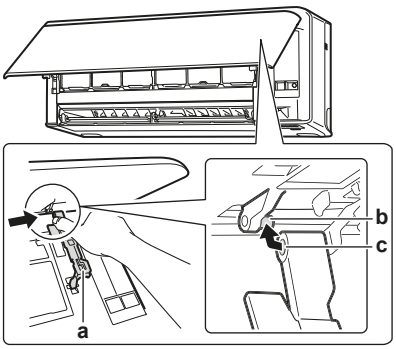

a Arm
b Shaft
c Shaft slot

4 Disconnect the front panel shaft from the shaft slot on the left side.

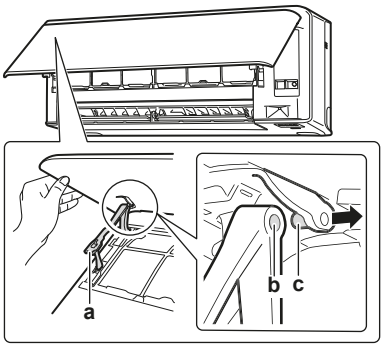

a Arm
b Shaft slot
c Shaft

5 Remove the front panel.

6 To re-install the front panel perform the steps in the opposite order.

6.2.4 To open the service cover

1 Remove 1 screw from the service cover.

2 Pull out the service cover horizontally away from the unit.

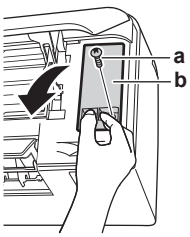

a Service cover screw
b Service cover

NOTICE

When closing the service cover, make sure that the tightening torque does NOT exceed 1.4 (±0.2) N•m.

6.2.5 To remove the front grille

CAUTION

Wear protective gloves.

1 Open the front panel. Refer to "6.2.1 To open the front panel" [▸ 10].

2 Remove the service cover. Refer to "6.2.4 To open the service cover" [▸ 11].

3 Remove the wire harness from the wire clamp and the connector.

4 Remove the flap by pushing it to the left side and towards you.

5 Remove the 2 screw covers using a long flat plate such as a ruler wrapped in a cloth and remove 2 screws.

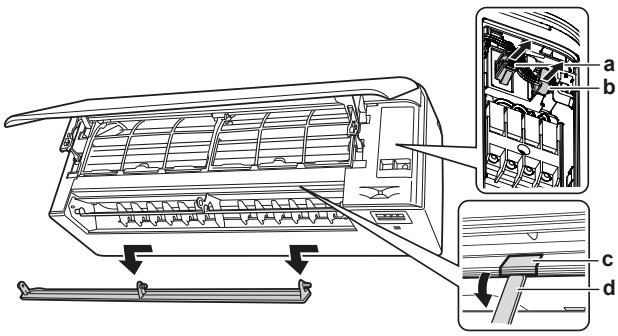

a Connector
b Wire clamp
c Screw cover
d Long flat plate wrapped in a cloth

6 Push the front grille up and then towards the mounting plate to remove the front grille from the 3 hooks.

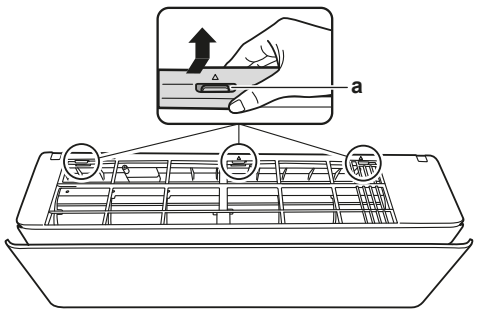

a Hook

Prerequisite: If working space is limited.

7 Insert a flat screwdriver next to the hooks.

8 Pull the front grille up using the flat screwdriver and push towards the mounting plate.

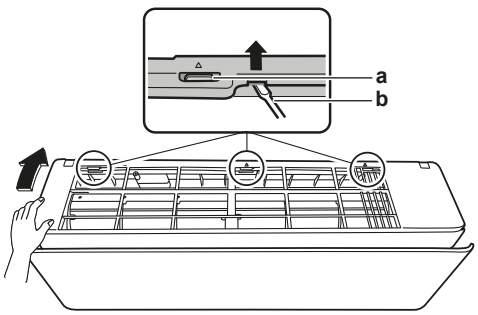

a Hook
b Flat screwdriver

6.2.6 To re-install the front grille

1 Install the front grille and firmly engage the 3 upper hooks.

2 Tighten the 2 screws and put the 2 screw covers back.

3 Re-install the flap.

4 Insert the wire harness back into the connector and secure it with the wire clamp.

5 Close the front panel. Refer to "6.2.2 To close the front panel" [▶ 10].

6.2.7 To remove the electrical wiring box cover

1 Remove the front grille.

2 Remove 1 screw from the electrical wiring box.

3 Open the electrical wiring box cover by pulling it to the front.

4 Remove the electrical wiring box cover from the 2 rear hooks.

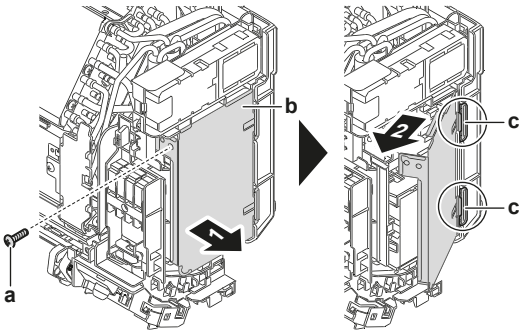

a Screw
b Electrical wiring box
c Rear hook

5 To re-install the cover, first attach the electrical wiring box to the hooks, close the electrical wiring box, and re-install the screw.

NOTICE

When closing the electrical wiring box cover, make sure that the tightening torque does NOT exceed 2.0 (±0.2) N•m.

6.3 Installing the indoor unit

6.3.1 Precautions when installing the indoor unit

INFORMATION

Also read the precautions and requirements in the following chapters:

- General safety precautions
- Preparation

6.3.2 To install the mounting plate

1 Install the mounting plate temporarily.

2 Level the mounting plate.

3 Mark the centres of the drilling points on the wall using a tape measure. Position the end of tape measure at symbol "▷".

4 Finish the installation by securing the mounting plate on the wall using M4×25L screws (field supply).

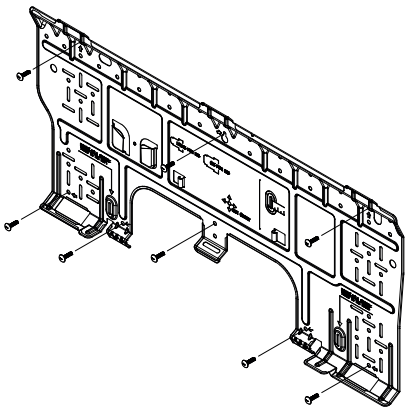

INFORMATION

The removed pipe port cover can be kept in the mounting plate pocket.

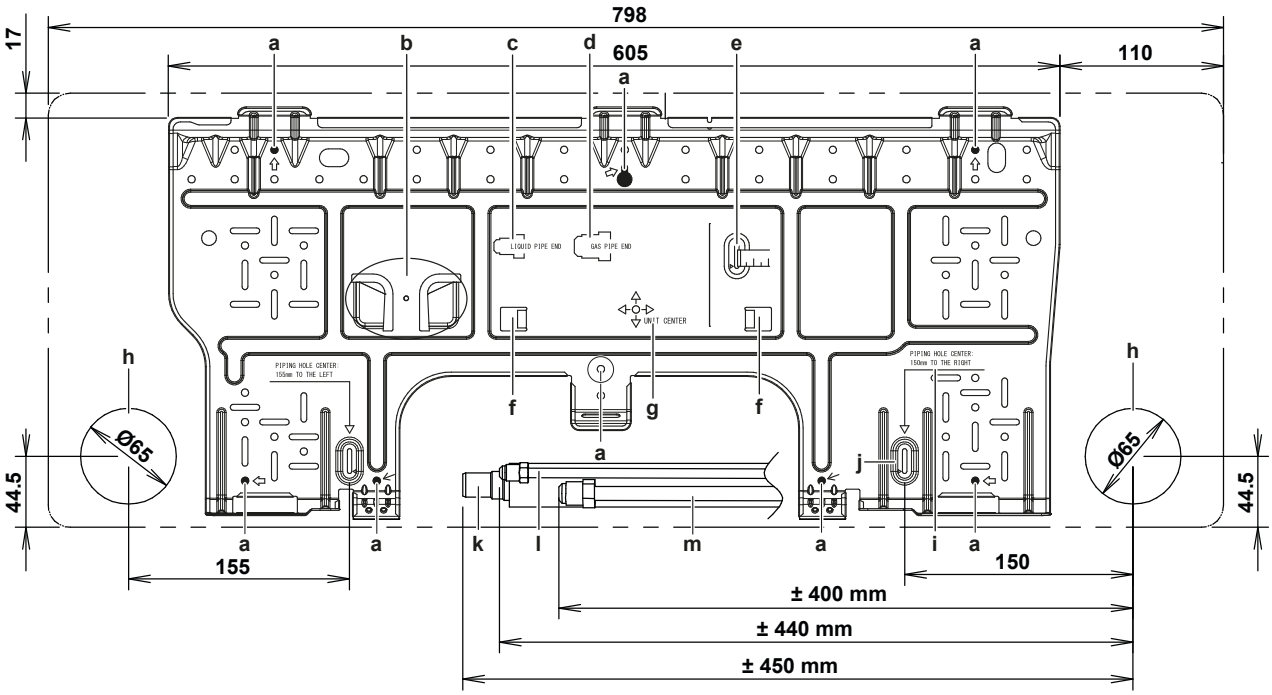

a Recommended mounting plate fixing spots
b Pocket for the pipe port cover
c Liquid pipe end
d Gas pipe end

- **e** Use tape measure as shown
- **f** Tabs for placing a spirit level
- **g** Unit center
- **h** Hole for embedded piping Ø65 mm
- **i** Value for tape measure
- **j** Position the end of tape measure at symbol "▷"
- **k** Drain hose
- **l** Liquid pipe
- **m** Gas pipe

6.3.3 To drill a wall hole

CAUTION

For walls containing a metal frame or a metal board, use a wall embedded pipe and wall cover in the feed-through hole to prevent possible heat, electrical shock, or fire.

NOTICE

Be sure to seal the gaps around the pipes with sealing material (field supply), in order to prevent water leakage.

1. Bore a 65 mm large feed-through hole in the wall with a downward slope towards the outside.
2. Insert a wall embedded pipe into the hole.
3. Insert a wall cover into the wall pipe.

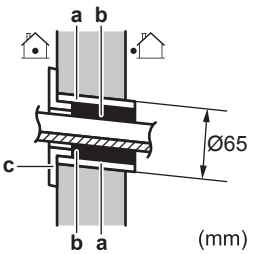

- **a** Wall embedded pipe
- **b** Putty
- **c** Wall hole cover

4. After completing wiring, refrigerant piping and drain piping, do NOT forget to seal the gap with putty.

6.3.4 To remove the pipe port cover

To connect the piping on right-side, right-bottom, left-side or left-bottom, the pipe port cover MUST be removed.

1. Cut off the pipe port cover from inside the front grille using a coping saw.

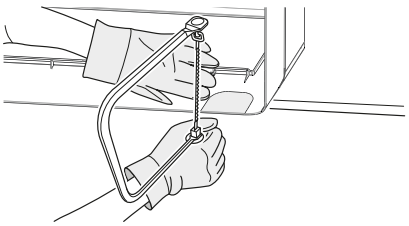

2. Remove any burrs along the cut section using a half round needle file.

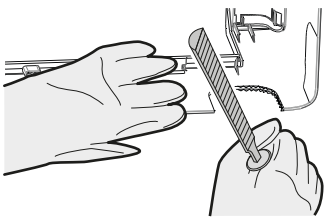

NOTICE

Do NOT use nippers to remove the pipe port cover, as this would damage the front grille.

6.3.5 To provide drainage

Make sure condensation water can be evacuated properly. This involves:

- General guidelines
- Connecting the drain piping to the indoor unit
- Checking for water leaks

General guidelines

- **Pipe length.** Keep drain piping as short as possible.
- **Pipe size.** If drain hose extension or embedded drain piping is required, use appropriate parts that match the hose front end.

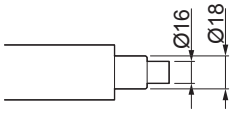

NOTICE

- Install the drain hose with a downward slope.
- Traps are NOT permitted.
- Do NOT put the end of the hose in water.

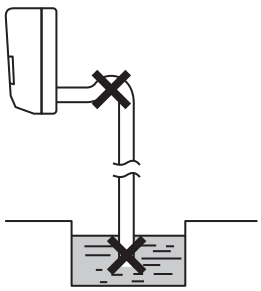

- **Drain hose extension.** To extend the drain hose, use a field supplied hose with inner Ø16 mm. Do NOT forget to use a heat insulation tube on the indoor section of the extension hose.

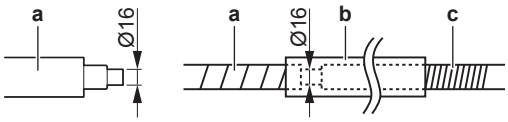

- **a** Drain hose supplied with the indoor unit
- **b** Heat insulation tube (field supply)
- **c** Extension drain hose

- **Rigid polyvinyl chloride pipe.** When connecting a rigid polyvinyl chloride pipe (nominal Ø13 mm) directly to the drain hose as with embedded piping work, use a field supplied drain socket (nominal Ø13 mm).

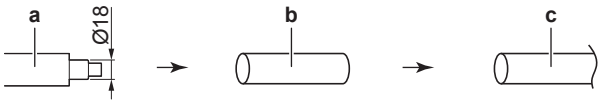

- **a** Drain hose supplied with the indoor unit
- **b** Drain socket with nominal Ø13 mm (field supply)
- **c** Rigid polyvinyl chloride pipe (field supply)

- **Condensation.** Take measures against condensation. Insulate the complete drain piping in the building.

1. Insert the drain hose in the drain pipe as shown in the following figure, so it will NOT be pulled out of the drain pipe.

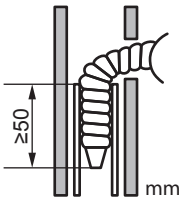

To connect the piping on right side, right-back, or right-bottom

INFORMATION

The factory default is right-side piping. For left-side piping, remove the piping from the right side and install it on the left side.

1 Attach the drain hose with adhesive vinyl tape to the bottom of the refrigerant pipes.

2 Wrap the drain hose and the refrigerant pipes together using insulation tape.

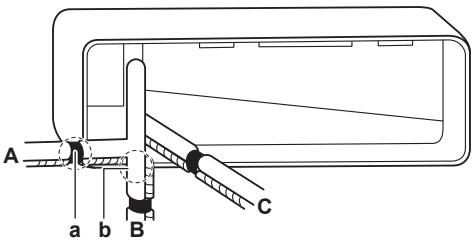

A Right-side piping
B Right-bottom piping
C Right-back piping
a Remove the pipe port cover here for right-side piping.
b Remove the pipe port cover here for right-bottom piping.

To connect the piping on left side, left-back, or left-bottom

INFORMATION

The factory default is right-side piping. For left-side piping, remove the piping from the right side and install it on the left side.

1 Remove the insulation fixing screw on the right side and remove the drain hose.

2 Remove the drain plug on the left side and attach it to the right side.

NOTICE

Do NOT apply lubricating oil (refrigerant oil) to the drain plug when inserting it. The drain plug may deteriorate and cause drain leakage from the plug.

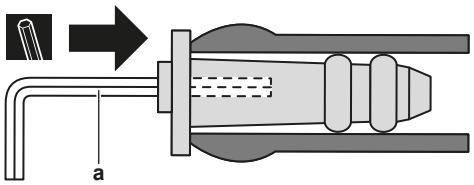

a 4 mm hexagonal wrench

3 Insert the drain hose on the left side and do not forget to tighten it with the fixing screw; otherwise water leakage may occur.

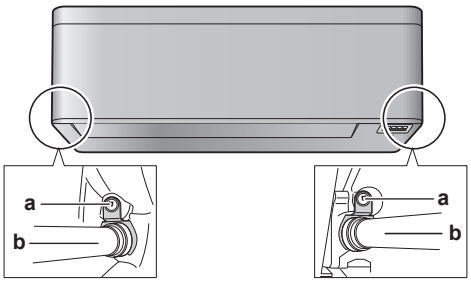

a Insulation fixing screw
b Drain hose

4 Attach the drain hose to the refrigerant pipes bottom side using adhesive vinyl tape.

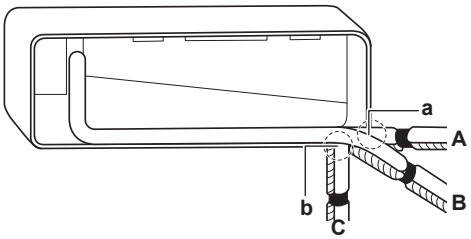

A Left-side piping
B Left-back piping
C Left-bottom piping
a Remove the pipe port cover here for left-side piping.
b Remove the pipe port cover here for left-bottom piping.

To check for water leaks

1 Remove the air filters.

2 Gradually pour approximately 1 l of water in the drain pan, and check for water leaks.

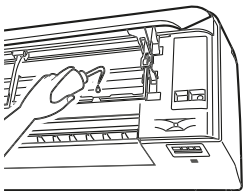

6.4 Connecting the refrigerant piping

6.4.1 About connecting the refrigerant piping

Before connecting the refrigerant piping

Make sure the outdoor and indoor unit are mounted.

Typical workflow

Connecting the refrigerant piping involves:

- Connecting the refrigerant piping to the indoor unit
- Connecting the refrigerant piping to the outdoor unit
- Insulating the refrigerant piping
- Keeping in mind the guidelines for:
  - Pipe bending
  - Flaring pipe ends
  - Using the stop valves

6.4.2 Precautions when connecting the refrigerant piping

INFORMATION

Also read the precautions and requirements in the following chapters:

- General safety precautions
- Preparation

DANGER: RISK OF BURNING

CAUTION

- Use the flare nut fixed to the unit.
- To prevent gas leakage, apply refrigeration oil only to the inside of the flare. Use refrigeration oil for R32.
- Do NOT reuse joints.

CAUTION

- Do NOT use mineral oil on flared part.
- NEVER install a drier to this R32 unit to guarantee its lifetime. The drying material may dissolve and damage the system.

NOTICE

Take the following precautions on refrigerant piping into account:

- Avoid anything but the designated refrigerant to get mixed into the refrigerant cycle (e.g. air).
- Only use R32 when adding refrigerant.
- Only use installation tools (e.g. manifold gauge set) that are exclusively used for R32 installations to withstand the pressure and to prevent foreign materials (e.g. mineral oils and moisture) from mixing into the system.
- Install the piping so that the flare is NOT subjected to mechanical stress.
- Protect the piping as described in the following table to prevent dirt, liquid or dust from entering the piping.
- Use caution when passing copper tubes through walls (see figure below).

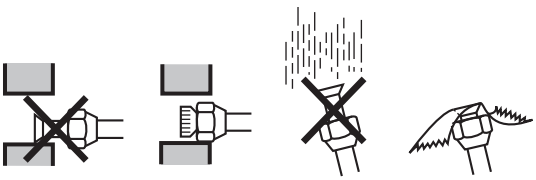

Unit	Installation period	Protection method
Outdoor unit	>1 month	Pinch the pipe
	<1 month	Pinch or tape the pipe
Indoor unit	Regardless of the period	

INFORMATION

Do NOT open the refrigerant stop valve before checking the refrigerant piping. When you need to charge additional refrigerant it is recommended to open the refrigerant stop valve after charging.

6.4.3 Guidelines when connecting the refrigerant piping

Take the following guidelines into account when connecting pipes:

- Coat the flare inner surface with ether oil or ester oil when connecting a flare nut. Tighten 3 or 4 turns by hand, before tightening firmly.

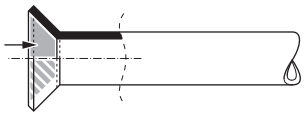

- ALWAYS use 2 wrenches together when loosening a flare nut.
- ALWAYS use a spanner and torque wrench together to tighten the flare nut when connecting the piping. This to prevent nut cracking and leaks.

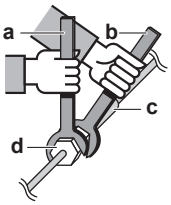

a Torque wrench
b Spanner
c Piping union
d Flare nut

Piping size (mm)	Tightening torque (N•m)	Flare dimensions (A) (mm)	Flare shape (mm)
Ø6.4	15~17	8.7~9.1	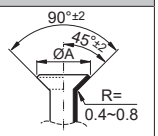
Ø9.5	33~39	12.8~13.2	
Ø12.7	50~60	16.2~16.6	

6.4.4 Pipe bending guidelines

Use a pipe bender for bending. All pipe bends should be as gentle as possible (bending radius should be 30~40 mm or larger).

6.4.5 To flare the pipe end

CAUTION

- Incomplete flaring may cause refrigerant gas leakage.
- Do NOT re-use flares. Use new flares to prevent refrigerant gas leakage.
- Use flare nuts that are included with the unit. Using different flare nuts may cause refrigerant gas leakage.

1. Cut the pipe end with a pipe cutter.
2. Remove burrs with the cut surface facing down so that the chips do NOT enter the pipe.

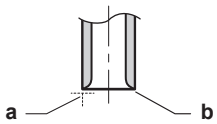

a Cut exactly at right angles.
b Remove burrs.

3. Remove the flare nut from the stop valve and put the flare nut on the pipe.
4. Flare the pipe. Set exactly at the position as shown in the following figure.

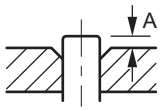

	Flare tool for R32 (clutch type)	Conventional flare tool	
		Clutch type (Ridgid-type)	Wing nut type (Imperial-type)
A	0~0.5 mm	1.0~1.5 mm	1.5~2.0 mm

5 Check that the flaring is properly made.

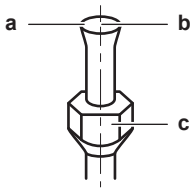

a Flare's inner surface MUST be flawless.
b The pipe end MUST be evenly flared in a perfect circle.
c Make sure the flare nut is fitted.

6.4.6 To connect the refrigerant piping to the indoor unit

- **Pipe length**. Keep refrigerant piping as short as possible.
- **Flare connections**. Connect refrigerant piping to the unit using flare connections.
- **Insulation**. Insulate the refrigerant piping, interconnection cable and drain hose on the indoor unit as follows:

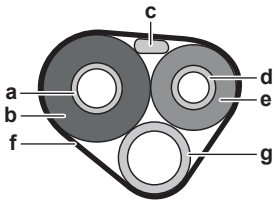

a Gas pipe
b Gas pipe insulation
c Interconnection cable
d Liquid pipe
e Liquid pipe insulation
f Finishing tape
g Drain hose

NOTICE

Make sure to insulate all refrigerant piping. Any exposed piping might cause condensation.

6.5 Connecting the electrical wiring

6.5.1 About connecting the electrical wiring

Typical workflow

Connecting the electrical wiring typically consists of the following stages:

1 Making sure the power supply system complies with the electrical specifications of the units.
2 Connecting the electrical wiring to the outdoor unit.
3 Connecting the electrical wiring to the indoor unit.
4 Connecting the main power supply.

6.5.2 Precautions when connecting the electrical wiring

INFORMATION

Also read the precautions and requirements in the following chapters:

- General safety precautions
- Preparation

DANGER: RISK OF ELECTROCUTION

WARNING

ALWAYS use multicore cable for power supply cables.

WARNING

If the supply cord is damaged, it MUST be replaced by the manufacturer, its service agent or similarly qualified persons in order to avoid a hazard.

WARNING

Do NOT connect the power supply to the indoor unit. This could result in electrical shock or fire.

WARNING

- Do NOT use locally purchased electrical parts inside the product.
- Do NOT branch the power supply for the drain pump, etc. from the terminal block. This could result in electrical shock or fire.

WARNING

Keep the interconnection wiring away from copper pipes without thermal insulation as such pipes will be very hot.

6.5.3 Guidelines when connecting the electrical wiring

Keep the following in mind:

- If stranded conductor wires are used, install a round crimp-style terminal on the end of the wire. Place the round crimp-style terminal on the wire up to the covered part and fasten the terminal with the appropriate tool.

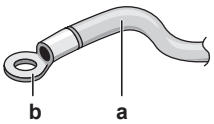

a Stranded conductor wire
b Round crimp-style terminal

- Use the following methods for installing wires:

Wire type	Installation method
Single-core wire	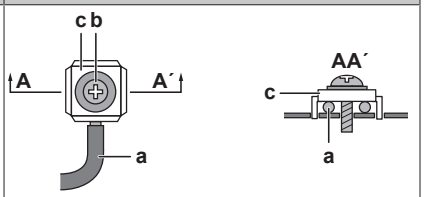 **a** Curled single-core wire **b** Screw **c** Flat washer
Stranded conductor wire with round crimp-style terminal	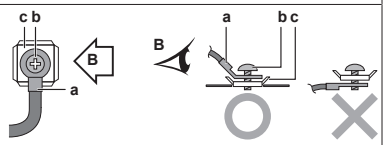 **a** Terminal **b** Screw **c** Flat washer **O** Allowed **X** NOT allowed

6.5.4 Specifications of standard wiring components

Component	
Interconnection cable (indoor↔outdoor)	4-core cable 1.5 mm²~2.5 mm² and applicable for 220~240 V H05RN-F (60245 IEC 57)

6.5.5 To connect the electrical wiring on the indoor unit

Electrical work should be carried out in accordance with the installation manual and the national electrical wiring rules or code of practice.

1 Set the indoor unit on the mounting plate hooks. Use the "△" marks as a guide.

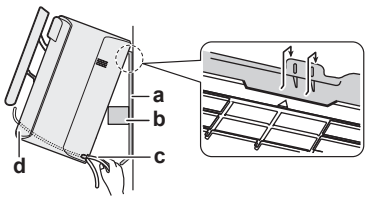

a Mounting plate (accessory)
b Piece of packing material
c Interconnection cable
d Wire guide

INFORMATION

Support the unit using a piece of packing material.

2 Open the front panel, and then the service cover. Refer to "6.2 Opening the indoor unit" [▶ 10].

3 Pass the interconnection cable from the outdoor unit through the feed-through wall hole, through the back of the indoor unit and through the front side.

Note: In case the interconnection cable was stripped in advance, cover the ends with insulating tape.

4 Bend the end of the cable up.

NOTICE

- Be sure to keep the power line and transmission line apart from each other. Transmission wiring and power supply wiring may cross, but may NOT run parallel.
- In order to avoid any electrical interference the distance between both wirings should ALWAYS be at least 50 mm.

WARNING

Provide adequate measures to prevent that the unit can be used as a shelter by small animals. Small animals that make contact with electrical parts can cause malfunctions, smoke or fire.

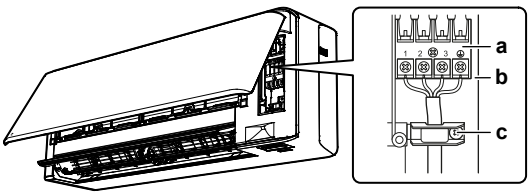

a Terminal block
b Electrical component block
c Wire retainer

5 Strip the wire ends approximately 15 mm.

6 Match wire colours with terminal numbers on the indoor unit terminal blocks and firmly screw the wires to the corresponding terminals.

7 Connect the earth wire to the corresponding terminal.

8 Firmly fix the wires with the terminal screws.

9 Pull the wires to make sure that they are securely attached, then retain the wires with the wire retainer.

10 Shape the wires so that the service cover fits securely, then close the service cover.

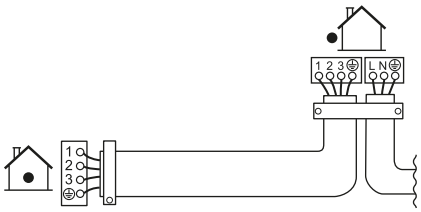

6.5.6 To connect optional accessories (wired user interface, central user interface, etc.)

1 Remove the electrical wiring box cover (refer to "6.2.7 To remove the electrical wiring box cover" [▶ 12]).

2 Attach the connection cable to the S21 connector and pull the wire harness as shown in the following figure.

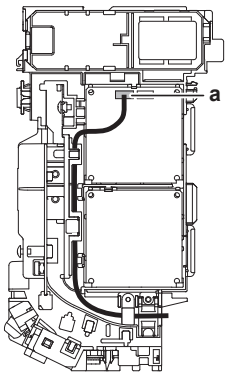

a S21 connector

3 Put the electrical wiring box cover back and pull the wire harness around it as shown in the figure above.

6.6 Finishing the indoor unit installation

6.6.1 To insulate the drain piping, refrigerant piping and interconnection cable

1 After the drain piping, refrigerant piping and the electrical wiring are finished. Wrap refrigerant pipes, interconnection cable and drain hose together using insulation tape. Overlap at least half the width of the tape with each turn.

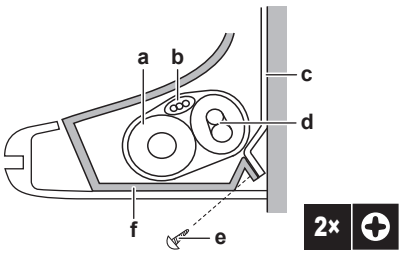

a Drain hose
b Interconnection cable
c Mounting plate (accessory)
d Refrigerant pipes
e Indoor unit fixing screw M4×12L (accessory)
f Bottom frame

6.6.2 To pass the pipes through the wall hole

1 Shape the refrigerant pipes along the pipe path marking on the mounting plate.

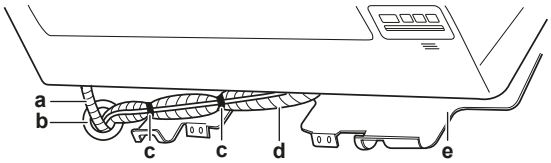

- **a** Drain hose
- **b** Caulk this hole with putty or caulking material.
- **c** Adhesive vinyl tape
- **d** Insulation tape
- **e** Mounting plate (accessory)

NOTICE

- Do NOT bend refrigerant pipes.
- Do NOT push the refrigerant pipes onto the bottom frame or the front grille.

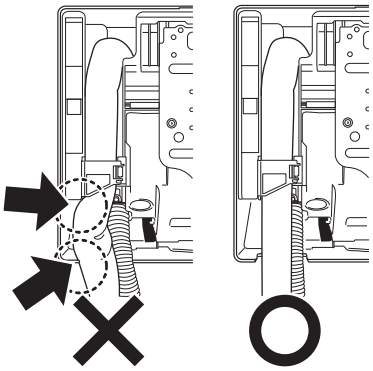

2 Pass the drain hose and refrigerant pipes through the wall hole.

6.6.3 To fix the unit on the mounting plate

1 Set the indoor unit on the mounting plate hooks. Use the "△" marks as a guide.

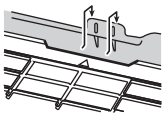

2 Press the bottom frame of the unit with both hands to set it on the bottom hooks of the mounting plate. Make sure that the wires do NOT get squeezed anywhere.

Note: Take care that the interconnection cable does NOT get caught in the indoor unit.

3 Press the bottom edge of the indoor unit with both hands until it is firmly caught by the mounting plate hooks.

4 Secure the indoor unit to the mounting plate using 2 indoor unit fixing screws M4×12L (accessory).

6.6.4 To install the screw covers

1 Open the front panel and turn the flap up.

2 Install both screw covers (1 on each side).

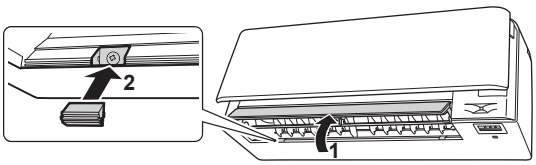

3 Return flap to its original position and close the front panel.

7 Configuration

7.1 To set a different address

In case 2 indoor units are installed in 1 room, different addresses for 2 user interfaces can be set.

1 Remove the cover and the batteries from the user interface.

2 Cut the address jumper J4.

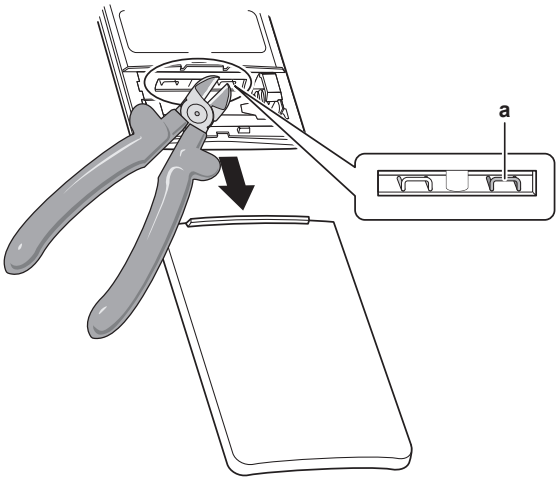

- **a** Address jumper J4

NOTICE

Be careful NOT to damage any of the surrounding parts when cutting the address jumper.

3 Turn the power supply on.

4 Press [Temp] and [Mode] simultaneously.

5 Press [Temp], select A and press [Mode].

Result: The operation lamp will start to blink.

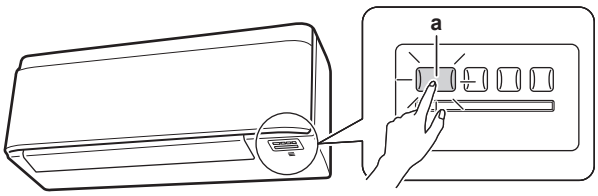

- **a** Indoor unit ON/OFF switch and operation lamp

6 Press the indoor unit ON/OFF switch while the operation lamp is blinking.

Address jumper	Address
Factory setting	1
After cutting with nippers	2

INFORMATION

If the setting could NOT be completed while the operation lamp was blinking, repeat the setting process from the beginning.

7 When the setting is complete, keep [Mode] pressed for at least 5 seconds.

Result: The user interface will return to the previous screen.

8 Commissioning

8.1 Overview: Commissioning

This chapter describes what you have to do and know to commission the system after it is installed.

Typical workflow

Commissioning typically consists of the following stages:

1 Checking the "Checklist before commissioning".

2 Performing a test run for the system.

8.2 Checklist before commissioning

After the installation of the unit, first check the items listed below. Once all checks are fulfilled, the unit must be closed. Power-up the unit after it is closed.

☐	You read the complete installation instructions, as described in the **installer reference guide**.
☐	The **indoor units** are properly mounted.
☐	The **outdoor unit** is properly mounted.
☐	**Air inlet/outlet** Check that the air inlet and outlet of the unit is NOT obstructed by paper sheets, cardboard, or any other material.
☐	There are NO **missing phases** or **reversed phases**.
☐	The **refrigerant pipes** (gas and liquid) are thermally insulated.
☐	**Drainage** Make sure drainage flows smoothly. **Possible consequence:** Condensate water might drip.
☐	The system is properly **earthed** and the earth terminals are tightened.
☐	The **fuses** or locally installed protection devices are installed according to this document, and have NOT been bypassed.
☐	The **power supply voltage** matches the voltage on the identification label of the unit.
☐	The specified wires are used for the **interconnection cable**.
☐	The indoor unit receives the signals of the **user interface**.
☐	There are NO **loose connections** or damaged electrical components in the switch box.
☐	The **insulation resistance** of the compressor is OK.
☐	There are NO **damaged components** or **squeezed pipes** on the inside of the indoor and outdoor units.
☐	There are NO **refrigerant leaks**.
☐	The correct pipe size is installed and the **pipes** are properly insulated.
☐	The **stop valves** (gas and liquid) on the outdoor unit are fully open.

8.3 To perform a test run

Prerequisite: Power supply MUST be in the specified range.

Prerequisite: Test run may be performed in cooling or heating mode.

Prerequisite: Test run should be performed in accordance with the operation manual of the indoor unit to make sure that all functions and parts are working properly.

1 In cooling mode, select the lowest programmable temperature. In heating mode, select the highest programmable temperature. Test run can be disabled if necessary.

2 When the test run is finished, set the temperature to a normal level. In cooling mode: 26~28°C, in heating mode: 20~24°C.

3 The system stops operating 3 minutes after the unit is turned OFF.

8.3.1 To perform a test run using the user interface

1 Press ⏻ to switch the system on.

2 Press Temp and Mode simultaneously.

3 Press Temp, select 7 and press Mode.

Result: Test run operation will stop automatically after about 30 minutes.

4 To stop operation sooner, press ⏻.

9 Hand-over to the user

Once the test run is finished and the unit operates properly, please make sure the following is clear for the user:

- Make sure that the user has the printed documentation and ask him/her to keep it for future reference. Inform the user that he can find the complete documentation at the URL mentioned earlier in this manual.
- Explain the user how to properly operate the system and what to do in case of problems.
- Show the user what to do for the maintenance of the unit.

10 Disposal

NOTICE

Do NOT try to dismantle the system yourself: dismantling of the system, treatment of the refrigerant, oil and other parts MUST comply with applicable legislation. Units MUST be treated at a specialised treatment facility for reuse, recycling and recovery.

11 Technical data

- A **subset** of the latest technical data is available on the regional Daikin website (publicly accessible).
- The **full set** of latest technical data is available on the Daikin Business Portal (authentication required).

11.1 Wiring diagram

The wiring diagram is delivered with the unit, located inside of the outdoor unit (bottom side of the top plate).

11.1.1 Unified wiring diagram legend

For applied parts and numbering, refer to the wiring diagram on the unit. Part numbering is by Arabic numbers in ascending order for each part and is represented in the overview below by "*" in the part code.

Symbol	Meaning	Symbol	Meaning
	Circuit breaker		Protective earth
	Connection		Protective earth (screw)
	Connector		Rectifier
	Earth		Relay connector
	Field wiring		Short-circuit connector
	Fuse		Terminal
INDOOR	Indoor unit		Terminal strip
OUTDOOR	Outdoor unit		Wire clamp

Symbol	Colour	Symbol	Colour
BLK	Black	ORG	Orange
BLU	Blue	PNK	Pink
BRN	Brown	PRP, PPL	Purple
GRN	Green	RED	Red
GRY	Grey	WHT	White
		YLW	Yellow

Symbol	Meaning
A*P	Printed circuit board
BS*	Pushbutton ON/OFF, operation switch
BZ, H*C	Buzzer
C*	Capacitor
AC*, CN*, E*, HA*, HE*, HL*, HN*, HR*, MR*_A, MR*_B, S*, U, V, W, X*A, K*R_*	Connection, connector
D*, V*D	Diode
DB*	Diode bridge
DS*	DIP switch
E*H	Heater
FU*, F*U, (for characteristics, refer to PCB inside your unit)	Fuse
FG*	Connector (frame ground)
H*	Harness
H*P, LED*, V*L	Pilot lamp, light emitting diode
HAP	Light emitting diode (service monitor green)
HIGH VOLTAGE	High voltage
IES	Intelligent eye sensor
IPM*	Intelligent power module
K*R, KCR, KFR, KHuR, K*M	Magnetic relay
L	Live
L*	Coil
L*R	Reactor
M*	Stepper motor
M*C	Compressor motor
M*F	Fan motor
M*P	Drain pump motor
M*S	Swing motor
MR*, MRCW*, MRM*, MRN*	Magnetic relay
N	Neutral
n=*, N=*	Number of passes through ferrite core

Symbol	Meaning
PAM	Pulse-amplitude modulation
PCB*	Printed circuit board
PM*	Power module
PS	Switching power supply
PTC*	PTC thermistor
Q*	Insulated gate bipolar transistor (IGBT)
Q*DI	Earth leak circuit breaker
Q*L	Overload protector
Q*M	Thermo switch
R*	Resistor
R*T	Thermistor
RC	Receiver
S*C	Limit switch
S*L	Float switch
S*NPH	Pressure sensor (high)
S*NPL	Pressure sensor (low)
S*PH, HPS*	Pressure switch (high)
S*PL	Pressure switch (low)
S*T	Thermostat
S*RH	Humidity sensor
S*W, SW*	Operation switch
SA*, F1S	Surge arrester
SR*, WLU	Signal receiver
SS*	Selector switch
SHEET METAL	Terminal strip fixed plate
T*R	Transformer
TC, TRC	Transmitter
V*, R*V	Varistor
V*R	Diode bridge
WRC	Wireless remote controller
X*	Terminal
X*M	Terminal strip (block)
Y*E	Electronic expansion valve coil
Y*R, Y*S	Reversing solenoid valve coil
Z*C	Ferrite core
ZF, Z*F	Noise filter
A*P	Printed circuit board
BS*	Pushbutton ON/OFF, operation switch
BZ, H*C	Buzzer
C*	Capacitor
AC*, CN*, E*, HA*, HE*, HL*, HN*, HR*, MR*_A, MR*_B, S*, U, V, W, X*A, K*R_*	Connection, connector

12 Glossary

Dealer

Sales distributor for the product.

Authorised installer

Technical skilled person who is qualified to install the product.

User

Person who is owner of the product and/or operates the product.

Applicable legislation

All international, European, national and local directives, laws, regulations and/or codes that are relevant and applicable for a certain product or domain.

Service company

Qualified company which can perform or coordinate the required service to the product.

Installation manual

Instruction manual specified for a certain product or application, explaining how to install, configure and maintain it.

Operation manual

Instruction manual specified for a certain product or application, explaining how to operate it.

Maintenance instructions

Instruction manual specified for a certain product or application, which explains (if relevant) how to install, configure, operate and/or maintain the product or application.

Accessories

Labels, manuals, information sheets and equipment that are delivered with the product and that need to be installed according to the instructions in the accompanying documentation.

Optional equipment

Equipment made or approved by Daikin that can be combined with the product according to the instructions in the accompanying documentation.

Field supply

Equipment NOT made by Daikin that can be combined with the product according to the instructions in the accompanying documentation.

Copyright 2017 Daikin

DAIKIN INDUSTRIES CZECH REPUBLIC s.r.o.
U Nové Hospody 1/1155, 301 00 Plzeň Skvrňany, Czech Republic

DAIKIN EUROPE N.V.
Zandvoordestraat 300, B-8400 Oostende, Belgium

4P518023-3F 2019.10