DAIKIN

OPERATION MANUAL

Split System Air Conditioner

FVA71AMVEB
FVA100AMVEB
FVA125AMVEB
FVA140AMVEB

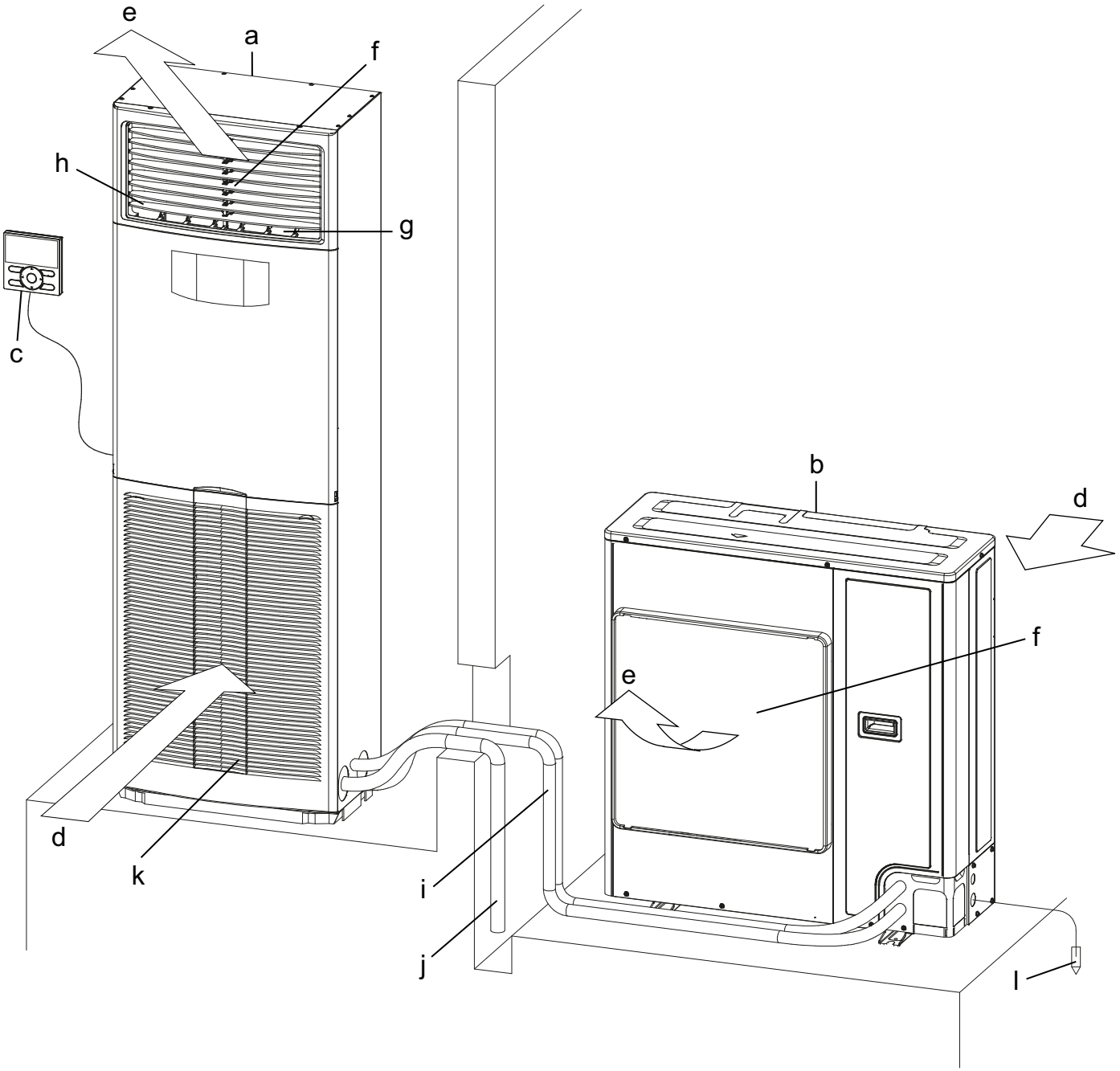
e
a
f
h
g
c
b
d
f
e
d
k
i
j
l

CONTENTS

ILLUSTRATION 1
1. SAFETY PRACECAUTIONS 2
2. WHAT TO DO BEFORE OPERATION 5
3. OPERATION RANGE 6
4. INSTALLATION SITE 6
5. OPERATION PROCEDURE 7
6. OPERATION CHARACTERISTICS 7
7. OPTIMUM OPERATION 10
8. MAINTENANCE (FOR SERVICE PERSONNEL) 10
9. NOT A MALFUNCTION OF THE AIR CONDITIONER 12
10. TROUBLE SHOOTING 14
11. DISPOSAL REQUIREMENTS 16

Thank you for purchasing this Daikin air conditioner. Carefully read this operation manual before using the air conditioner. It will tell you how to use the unit properly and help you if any trouble occurs. After reading the manual, file it away for future reference. Furthermore, make certain that this operation manual is handed to a new user when he takes over the operation.

The original instructions are written in English. All other languages are translations of the original instructions.

This operation manual is dedicated for the indoor unit. Also refer to the operation manuals provided with the outdoor unit and remote controller.

Important information regarding the refrigerant used

This product contains fluorinated greenhouse gases. Do not vent gases into the atmosphere.

Refrigerant type:	**R32**
GWP(1) value:	**675**

Refrigerant type:	**R410A**
GWP(1) value:	**2087.5**

(1) GWP = global warming potential

Periodical inspections for refrigerant leaks may be required depending on European or local legislation. Please contact your local dealer for more information.

NOTICE regarding tCO_2eq

In Europe, the **greenhouse gas emissions** of the total refrigerant charge in the system (expressed as tonnes CO_2-equivalent) is used to determine the maintenance intervals. Follow the applicable legislation.

Formula to calculate the greenhouse gas emissions:
GWP value of the refrigerant × Total refrigerant charge [in kg] / 1000

This appliance is filled with R32.

1. SAFETY PRACECAUTIONS

To gain full advantage of the air conditioner's functions and to avoid malfunction due to mishandling, please read this operation manual carefully before use.

This appliance is intended to be used by expert or trained users in shops, in light industry and on farms, or for commercial use by lay persons.

This appliance can be used by children aged from 8 years and above and persons with reduced physical, sensory or mental capabilities or lack of experience and knowledge if they have been given supervision or instruction concerning use of the appliance in a safe way and understand the hazards involved. Children shall not play with the appliance. Cleaning and user maintenance shall only be done by persons described in manual.

The appliance is not intended for use by unattended young children or persons who are incompetent to operate air conditioners.
It may result in injury or electric shocks.

- **This manual classifies the precautions into WARNINGS and CAUTIONS. Be sure to follow all the precautions below: They are all important for ensuring safety.**

WARNING ..... Indicates a potentially hazardous situation which, if not avoided, could result in death or serious injury.

CAUTION ..... Indicates a potentially hazardous situation which, if not avoided, may result in minor or moderate injury.
It may also be used to alert against unsafe practices.

- **After reading, keep this manual in a convenient place so that you can refer to it whenever necessary. If the equipment is transferred to a new user, be sure also to hand over the manual.**

WARNING

When the air conditioner is malfunctioning (giving off a burning odor, etc.), turn off the power to the air conditioner and contact your local dealer.
Continued operation under such circumstances may result in a failure, electric shocks or a fire.

Consult your local dealer regarding modification, repair and maintenance of the air conditioner.
Improper workmanship may result in water leakage, electric shocks or a fire.

Be sure to use fuses with the correct ampere reading.
Do not use improper fuses, copper or other wiring as a substitute, as this may result in electric shocks, a fire, injury or damage to the air conditioner.

Consult your local dealer if the air conditioner submerges owing to a natural disaster, such as a flood or typhoon.
Do not operate the air conditioner in that case, or otherwise a malfunction, electric shocks, or a fire may result.

Start or stop the air conditioner with the remote controller. Never use the power circuit breaker for this purpose.
Otherwise, it may cause a fire or water leakage. Furthermore, if an automatic restart control is provided against power failure and the power is recovered, the fan will rotate suddenly and may cause injury.

Do not use the air conditioner in the atmosphere contaminated with oil vapor, such as cooking oil or machine oil vapor.
Oil vapor may cause crack damage to the air conditioner, electric shocks, or a fire.

Do not use flammable materials (e.g., hairspray or insecticide) near the air conditioner.
Do not clean the air conditioner with organic solvents such as paint thinner.
The use of organic solvents may cause crack damage to the air conditioner, electric shocks, or a fire.

Do not use the air conditioner in places with excessive oily smoke, such as cooking rooms, or in places with flammable gas, corrosive gas, or metal dust.
Using the air conditioner in such places may cause a fire or air conditioner failures.

Beware of a fire in case of refrigerant leakage.
If the air conditioner is not operating correctly, i.e. not generating cool or warm air, refrigerant leakage could be the cause. Consult your local dealer for assistance. The refrigerant used for the air conditioner is safe and normally does not leak. However, if the refrigerant leaks and gets in contact with a naked burner, heater or cooker, it may generate hazardous compounds. Turn off the air conditioner and call your local dealer. Turn on the air conditioner after the qualified service person makes sure to confirm that the leakage is repaired.

Do not place objects, including rods, your fingers, etc., in the air inlet or outlet.
Injury may result due to contact with the air conditioner's highspeed fan blades.

Consult your local dealer regarding cleaning the inside of the air conditioner.
Improper cleaning may cause breakage of plastic parts, water leakage and other damage as well as electric shocks.

Be aware that prolonged, direct exposure to cool or warm air from the air conditioner, or to air that is too cool or too warm can be harmful to your physical condition and health.

Consult your local dealer about installation work.
Doing the work yourself may result in water leakage, electric shocks or a fire.

Contact professional personnel about attachment of accessories and be sure to use only accessories specified by the manufacturer.
If a defect results from your own workmanship, it may result in water leakage, electric shocks or a fire.

Consult your local dealer regarding relocation and reinstallation of the air conditioner.
Improper installation work may result in leakage, electric shocks or a fire.

Be sure to earth the air conditioner.
Do not earth the air conditioner to a utility piping, lightning conductor or telephone earth lead.
Imperfect earthing may result in electric shocks or a fire.
A high surge current from lightning or other sources may cause damage to the air conditioner.

Be sure to install an earth leakage breaker.
Failure to install an earth leakage breaker may result in electric shocks or a fire.

Be sure to use a dedicated power supply for the air conditioner.
The use of any other power supply may cause heat generation, a fire, or air conditioner failures.

Consult your local dealer regarding what to do in case of refrigerant leakage.
When the air conditioner is installed in a small room, it is necessary to take proper measures so that the amount of any leaked refrigerant does not exceed the concentration limit in the event of a leakage. Otherwise, this may lead to an accident due to oxygen depletion.

⚠ CAUTION

Children should be watched so that they do not play with the indoor unit or its remote controller.
Accidental operation by a child may result in injury or electric shocks.

Do not allow a child to mount on the outdoor unit or avoid placing any object on it.
Falling or tumbling may result in injury.

Do not let children play on or around the outdoor unit.
If they touch the unit carelessly, injury may be caused.

Be sure that children, plants or animals are not exposed directly to airflow from the indoor unit, as adverse effects may ensue.

Do not place flammable sprays or operate spray containers near the air conditioner as this may result in a fire.

Do not wash the air conditioner or the remote controller with water, as this may result in electric shocks or fire.

Do not place water containers (flower vases, etc.) on the indoor unit, as this may result in electric shocks or a fire.

Do not put flammable containers, such as spray cans, within 1 m from the air outlet.
The containers may explode because the warm air from the indoor or outdoor unit will affect them.

Turn off the power when the air conditioner is not used for long periods of time (only for R410A refrigerant).
Otherwise, the air conditioner may get hot or catch on a fire due to dust accumulation.

Do not place objects in direct proximity of the outdoor unit and do not let leaves and other debris accumulate around the unit.
Leaves are a hotbed for small animals which can enter the unit. Once in the unit, such animals can cause malfunctions, smoke or a fire when making contact with electrical parts.

To avoid electric shocks, do not operate with wet hands.

Never touch the internal parts of the remote controller.
Touching certain internal parts will cause electric shocks and damage to the remote controller. Consult your local dealer about checking and adjustment of internal parts.

To avoid oxygen deficiency, ensure that the room is adequately ventilated if equipment such as a burner is used together with the air conditioner.

Do not leave the remote controller wherever there is a risk of wetting.
If water gets into the remote controller there is a risk of electrical leakage and damage to electronic components.

Do not remove the outdoor unit's outlet side grille.
The grille protects against the unit's high speed fan, which may cause injury.

After prolonged use, check the unit stand and its mounts for damage.
If left in a damaged condition, the unit may fall and cause injury.

To avoid injury, do not touch the air inlet or aluminum fins of the air conditioner.

Do not place objects that are susceptible to moisture directly beneath the indoor or outdoor units.
Under certain conditions, condensation on the unit or refrigerant piping, air filter dirt or drain blockage may cause dripping, resulting in fouling or failure of the object concerned.

Do not place appliances that produce naked flames in places exposed to the airflow from the air conditioner as this may impair combustion of the burner.

Do not block air inlets nor outlets.
Impaired airflow may result in insufficient performance or trouble.

Do not use the air conditioner for purposes other than those for which it is intended.
Do not use the air conditioner for cooling precision instruments, food, plants, animals or works of art as this may adversely affect the performance, quality and/or longevity of the object concerned.

Do not install the air conditioner at any place where there is a danger of flammable gas leakage.
In the event of a gas leakage, build-up of gas near the air conditioner may result in a fire.

Carry out drain piping properly to ensure complete drainage.
If drain piping is not carried out properly, drain will not flow out. Then, dirt and debris may be accumulated in the drain piping and may cause water leakage. If it occurs, stop the air conditioner and call your local dealer for assistance.

Do not turn off the breaker unless you smell something burning, or when doing repairs, inspection or cleaning of the unit.
Refrigerant leakage cannot be detected otherwise. (Only for R32 refrigerant)

Do not install in sealed, highly airtight spaces such as soundproof chambers and room which was sealed up the door (only for R32 refrigerant).

Do not use flammable substances (such as hairsprays or insecticides etc.) near the unit.
It could cause electric shock, fire, or a misdetection of the refrigerant sensor (only for R32 refrigerant).

Do not install in places filled with smoke, gas, chemicals etc.
There is a possibility that the sensors inside the indoor unit could detect these, and display a refrigerant leak abnormality (only for R32 refrigerant).

This unit is equipped with electrically powered safety measures. To be effective, the unit must be electrically powered at all times after installation, other than short service intervals (only for R32 refrigerant).

Before cleaning, be sure to stop the operation, turn the breaker off or pull out the power supply cord.

After cleaning, quickly turn the power supply breaker back on.

- **NOTE TO SERVICE PERSONNEL**

⚠ CAUTION

Read the following for the safety.
Do not operate the unit while the suction grille is open.
- Fan may rotate and cause accident.

Make sure to screw the suction grille stopper.
- If the screw is not completely tightened, the suction grille may come off and you may cut your fingers with the fan.
- After the installation or service maintenance, make sure to put the grille stopper to where it was with screws.
  (R & L, total 2:see the below.)

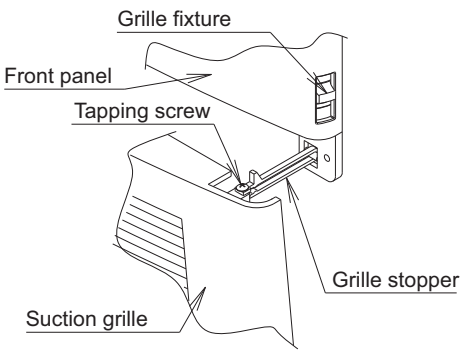

⚠ WARNING

May cause electric shock, ignition, fire
- Before starting the inspection of the electrical parts (control box, fan motor, drain pump, etc.), be sure cut off the all air-conditioner power (adaptor for wiring power is included) or you may get an electric shock.
- When cleaning the heat exchanger, be sure to remove the switch box, fan motor and drain pump.
  Water or detergent may deteriorate the insulation of electric components and result in burn-out of these components.

CAUTION! ELECTRIC SHOCK

- Due to high voltage, do not open control box lid for ten minutes after the safety breaker is switched off.
- After the box is opened, measure the voltages of the points shown below printed circuit board with a tester and confirm that the voltages are not higher than DC50V.
  Do not touch live parts when carrying out this work.

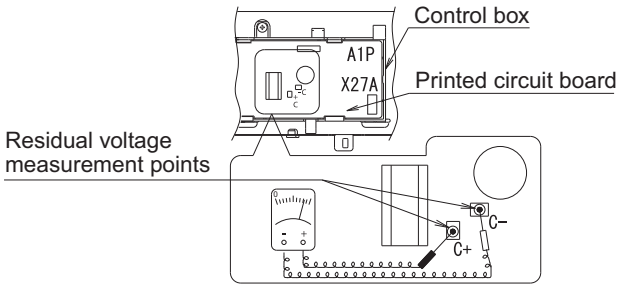

- After power failure, operation will restart automatically.

Please refer to the chapter “TROUBLE SHOOTING”. That appropriate action is taken based on the severity.

2. WHAT TO DO BEFORE OPERATION

This operation manual is for the following systems with standard control. Before initiating operation, contact your Daikin dealer for the operation that corresponds to your system.

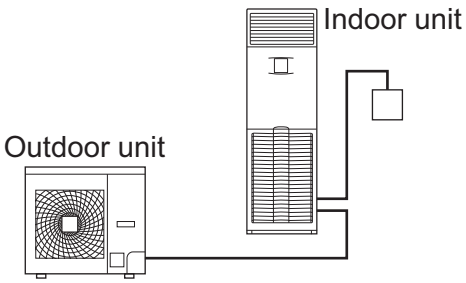

NOTE

- Read the operation manual that came with the remote controller you are using.

If your installation has a customized control system, ask your Daikin dealer for the operation that corresponds to your system.

- Heat pump type
  This system provides COOLING, HEATING, AUTOMATIC, PROGRAM DRY, and FAN ONLY OPERATION modes.

PRECAUTIONS FOR GROUP CONTROL SYSTEM OR TWO REMOTE CONTROLLER CONTROL SYSTEM

This system provides two other control systems beside individual control (one remote controller controls one indoor unit) system. Confirm the following if your unit is the following control system type.

- **Group control system**
  One remote controller controls up to 16 indoor units. All indoor units are equally set.
- **Two remote controllers control system**
  Two remote controllers control one indoor unit (In case of group control system, one group of indoor units)

NOTE

- Contact your Daikin dealer in case of changing the combination or setting of group control and two remote controller control systems.
- Please do not change the combination and settings for the group operation and two remote controllers control systems by yourself, but be sure to ask your dealer.

Names and functions of parts

Refer to figure on page 1

a	Indoor unit
b	Outdoor unit
c	Remote controller
d	Inlet air
e	Discharged air
f	Air outlet
g	Airflow flap (Vertical airflow direction adjustment flap)
h	Airflow flap (Horizontal airflow direction adjustment flap)
i	Refrigerant piping, electric wire connection, earth wire
j	Drain pipe
k	Air inlet The built-in air filter removes dust and dirt.
l	Earth wire Wire to ground from the outdoor unit to prevent electrical shocks and fire.

Information requirements for fan coil units

INFORMATION TO IDENTIFY THE MODEL(S) TO WHICH THE INFORMATION RELATES:							
Item	Symbol	Value	Unit	Item	Symbol	Value	Unit
Cooling capacity (sensible)	$P_{rated, c}$	A	kW	Total electric power input	P_{elec}	D	kW
Cooling capacity (latent)	$P_{rated, c}$	B	kW	Sound power level (per speed setting if applicable)	L_{WA}	E	dB
Heating capacity	$P_{rated, h}$	C	kW	—			
Contact details	DAIKIN INDUSTRIES CZECH REPUBLIC s.r.o. U Nové Hospody 1/1155, 301 00 Plzeň Skvrňany, Czech Republic						

THE ABOVE TABLE RELATES TO THE MODELS AND VALUES STATED IN THIS TABLE					
Models	A	B	C	D	E
FVA125AMVEB	7.83	4.27	13.50	0.24	63
FVA140AMVEB	8.68	4.72	15.50	0.28	65

3. OPERATION RANGE

If the temperature or the humidity is beyond the following conditions, safety devices may work and the air conditioner may not operate, or sometimes, water may drop from the indoor unit.

For combination with R410A outdoor unit, refer to the following table:

Outdoor units		Cooling	Heating
RZQG 71~140	Outdoor temperature	-15~50°C DB	-19~21°C DB -20~15.5°C WB
	Indoor temperature	18~37°C DB 12~28°C WB	10~27°C DB
RZQSG 71~140	Outdoor temperature	-15~46°C DB	-14~21°C DB -15~15.5°C WB
	Indoor temperature	20~37°C DB 14~28°C WB	10~27°C DB
RZQ 200~250	Outdoor temperature	-5~46°C DB	-14~21°C DB -15~15°C WB
	Indoor temperature	20~37°C DB 14~28°C WB	10~27°C DB
AZQS125 (AVA125 model only)	Outdoor temperature	-5~46°C DB	-15~15.5°C WB
	Indoor temperature	14~28°C WB	10~27°C DB
Indoor humidity ≤80%[(a)]			

For combination with R32 outdoor unit, refer to the following table:

Outdoor units		Cooling	Heating
RZAG 71~140	Outdoor temperature	-20~52°C DB	-19.5~21°C DB -20~15.5°C WB
	Indoor temperature	18~37°C DB 12~28°C WB	10~27°C DB
RZASG 71~140	Outdoor temperature	-15~46°C DB	-14~21°C DB -15~15.5°C WB
	Indoor temperature	20~37°C DB 14~28°C WB	10~27°C DB
AZAS125 (AVA125 model only)	Outdoor temperature	-5~46°C DB	-15~15°C WB
	Indoor temperature	14~28°C WB	10~27°C DB
Indoor humidity ≤80%[(a)]			

[(a)] To avoid condensation and water dripping out of the unit. If the temperature or the humidity is beyond these conditions, safety devices may be put in action and the air conditioner may not operate.

DB: Dry bulb temperature
WB: Wet bulb temperature

The setting temperature range of the remote controller is 16°C to 32°C.

4. INSTALLATION SITE

Regarding places for installation

- **Is the air conditioner installed at a well-ventilated place where there are no obstacles around?**
- **Do not use the air conditioner in the following places.**
  a. Filled with much mineral oil such as cutting oil
  b. Where there is much salt such as a beach area
  c. Where sulfured gas exists such as a hot-spring resort
  d. Where there are considerable voltage fluctuations such as a factory or plant
  e. Vehicles and vessels
  f. Where there is much spray of oil and vapor such as a cookery, etc.
  g. Where there are machines generating electromagnetic waves
  h. Filled with acid and/or alkaline steam or vapor
- **Is a snow protection measure taken?**
  For details, consult your dealer about snow protection hoods, etc.

Regarding wiring

- **All wiring must be performed by an authorized electrician.**
  To do wiring, ask your dealer. Never do it by yourself.
- **Make sure that a separate power supply circuit is provided for this air conditioner and that all electrical work is carried out by qualified personnel according to local laws and regulations.**

Pay attention to running noises, too

- **Are the following places selected?**
  a. A place that can sufficiently withstand the weight of the air conditioner with less running noises and vibrations.
  b. A place where the hot wind discharged from the air outlet of the outdoor unit and the running noises do not cause a nuisance to neighbours.
- **Are you sure that there are no obstacles near the air outlet of the outdoor unit?**
  Such obstacles may result in declined performance and increased running noises.
- **If abnormal noises occur in use, stop the operation of the air conditioner by remote controller, consult your dealer.**

Regarding drainage of drain piping

- **Is the drain piping carried out properly to ensure complete drainage?**
  If drain piping is not carried out properly, dirt and debris may be accumulated in the drain pipe and cause water leakage. If it occurs, stop the air conditioner and consult with your dealer for assistance.

5. OPERATION PROCEDURE

Read the operation manual that came with the remote controller.

- Operating procedure varies with heat pump type and cooling only type. Contact your Daikin dealer to confirm your system type.
- To protect the unit, turn on the main power switch 6 hours before operation.
- If the main power supply is turned off during operation, operation will restart automatically after the power turns back on again.

6. OPERATION CHARACTERISTICS

[CHARACTERISTICS OF THE COOLING OPERATION (COOLING OPERATION AND AUTOMATIC COOLING OPERATION)]

- If the COOLING OPERATION is used when the indoor temperature is low, frost forms on the heat exchanger of the indoor unit. This can decrease the cooling capacity. In this case, the system automatically switches to DEFROST OPERATION for a while.
  Low airflow rate is used prevent humidity increase.
- When the outdoor temperature is high, it takes some time until the indoor temperature reaches the set temperature.

[CHARACTERISTICS OF THE HEATING OPERATION (HEATING OPERATION AND AUTOMATIC HEATING OPERATION)]

START OF OPERATION

- It generally takes a longer time for HEATING OPERATION to reach the set temperature compared to COOLING OPERATION. It is advisable to start operation in advance using TIMER OPERATION.

Perform the following operation to prevent heating capacity decrease and discharge of cool air.

AT THE START OF OPERATION AND AFTER DEFROSTING OPERATION

- A warm air circulating system is employed, and therefore it takes some time until the entire room is warmed up after the start of operation.
- The indoor fan runs to discharge a gentle wind automatically until the temperature inside the air conditioner reaches a certain level. At this time, the remote controller displays “ ”. Leave it as it stands and wait for a while.
- The remote controller displays the airflow rate that is set.

DEFROST OPERATION (Frost removal operation for the outdoor unit)

- As the frost on the coil of an outdoor unit increase, heating effect decreases and the system goes into DEFROST OPERATION.
- The indoor unit fan stops and the remote controller display shows “ ”.
  The remote controller displays the airflow rate that is set.
- After 6 to 8 minutes (maximum 10 minutes) of DEFROST OPERATION, the system returns to HEATING OPERATION.

- When the operation is switched to the HEATING OPERATION during or after the DEFROST OPERATION, white mist comes out from the air outlet of the outdoor unit.
  (Refer to "**VI.**" on page 14.)
- A hissing and "Shuh" sound may be heard during this particular operation.

Regarding outside air temperature and heating capacity

- The heating capacity of the air conditioner declines as the outside air temperature falls. In such a case, use the air conditioner in combination with other heating systems.

NOTE

- When a combustion appliance is used, ventilate the room regularly.
- Do not use the combustion appliance where the air from the air conditioner is blown directly toward it.
- When the warm air stays under the ceiling and your feet are cold, we recommend that you use a circulator (a fan to circulate the air inside the room). For details, consult your dealer.
- When the indoor temperature exceeds the set temperature, the air conditioner discharges a gentle breeze (switches to whisper mode). (The remote controller displays the airflow rate that are being set.)

[CHARACTERISTICS OF THE PROGRAM DRY OPERATION]

- This operation lowers the humidity without lowering the indoor temperature, and automatically sets the airflow rate and temperature. Therefore, the remote controller does not display the airflow rate and set temperature. (The indoor temperature detected when the operation button is pressed is the set temperature.)
  When the indoor temperature is lowered, air discharge from the air conditioner may stop.
- If the PROGRAM DRY OPERATION is used when the indoor temperature is low, frost forms on the heat exchanger of the indoor unit. In this case, the system automatically switches to DEFROST OPERATION for a while.

NOTE

- If the temperature is excessively lowered, switch to the COOLING OPERATION once, and then stop the operation. When the temperature increases to a suitable level, start the PROGRAM DRY OPERATION again.

  Note: The PROGRAM DRY OPERATION cannot be used when the indoor temperature is 20°C or lower.

[SOUND PRESSURE LEVEL]

- Sound pressure level is less than 70 dB(A).

AIRFLOW DIRECTION ADJUST

There are 2 ways of adjusting the airflow direction.

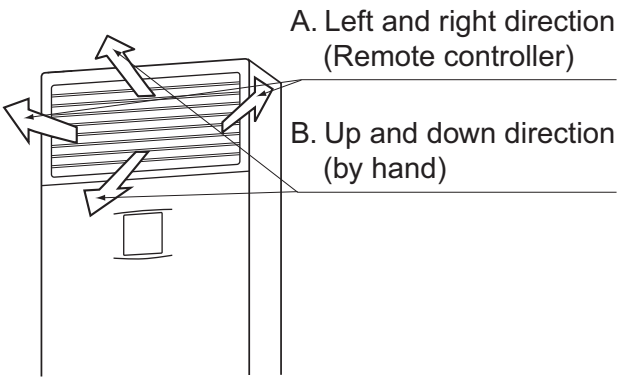

A.Left and right direction (Horizontal airflow direction)

Press the AIRFLOW DIRECTION ADJUST button to select the air direction as following.

The AIRFLOW DIRECTION display swings as shown the left and the airflow direction continuously varies. (Automatic swing setting)

Press AIRFLOW DIRECTION ADJUST button to select the air direction of your choice.

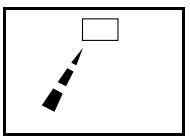

The AIRFLOW DIRECTION display stops swinging and the airflow direction is fixed (Fixed airflow direction setting).

Movement of left and right airflow flaps

- For the following conditions, micro computer controls the airflow direction so it may be different from the display.
  - When the indoor temperature is higher than the set temperature (HEATING OPERATION). (The air is discharged from the centre.)
  - During the DEFROST OPERATION when the HEATING OPERATION starts (HEATING OPERATION). (The air is discharged from the centre.)

B.Up and down direction (Vertical airflow direction)

The up and down airflow direction can be fixed at the desired position manually.

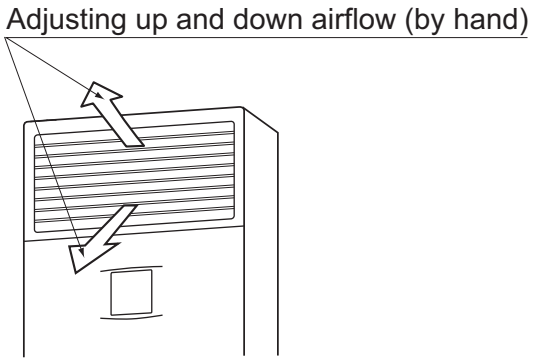

HOW TO ADJUSTING UP AND DOWN AIRFLOW

The horizontal flaps at the air outlet are composed of upper flaps, interlocking flaps (No.1 and No.2 groups), and lower flaps.
Adjust the flaps vertically by hand. It is effective when the flaps are facing slightly upward for cool air, and slightly downward for warm air.
In addition, the flaps are separated into No.1 and No.2 groups, and this enables up and down airflow. This is effective for controlling the indoor temperature near the air conditioner.

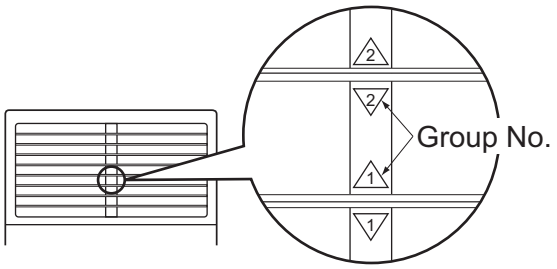

The group No. is stamped on the top and back of each flap.

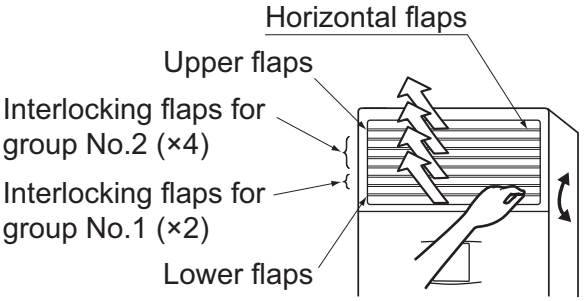

Upward blow

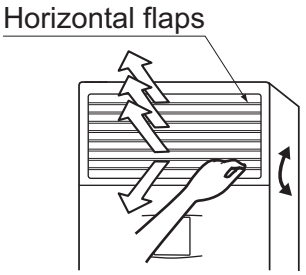

Vertical blow

NOTE

- Operating the unit with overlapping upper, lower, and interlocking flaps and the air outlet closed may cause dripping of condensation. Be sure not to close off the air outlet by blocking it with the upper, lower, or interlocking flaps.
- Do not set the horizontal flaps too far downward. This may cause an operation failure as the air from the air outlet is sucked from the suction grille.

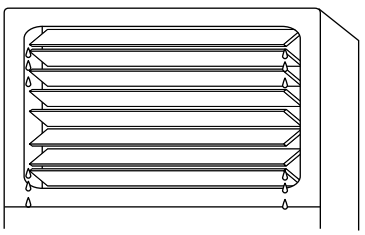

7. OPTIMUM OPERATION

Observe the following precautions to ensure the system operates.

- Prevent direct sunlight from entering a room during COOLING OPERATION by using curtains or blinds.
- Keep doors and windows closed. If the doors and windows remain open, room air will flow out and decrease the effect of cooling and heating .
- Never place objects near the air inlet and the air outlet of the unit. It may deteriorate the effect or stop the operation.
- Adjust the room temperature properly for a comfortable environment. Avoid excessive heating or cooling.
  Not doing so wastes electricity.
- When the display shows " " or "Time to clean filter", ask a qualified service person to clean the filters.
  (Refer to "MAINTENANCE" on page 10.)
  Operating the unit with stained air filter may decrease capacity or cause malfunction.
- Install TVs, radios, and stereos 1 m or more away from the indoor unit and remote controller.
  Images may become fuzzy and noise may be generated.
- Turn off the power circuit breaker when it is not in use for a long period (only for R410A refrigerant).
  When the main power switch is turned on, small amount of power is consumed even if the system is not in operation. (*1) Turn off the power circuit breaker for saving energy. When reoperating, turn on the power circuit breaker 6 hours before operation for smooth running. (Refer to "MAINTENANCE" on page 10.) (*2)
  *1 The consumed power while the outdoor unit is not in operation depends on the model.
  *2 The setting before the power circuit breaker is cut off is stored. (The timer setting is cleared.)
- Fully use the function of airflow direction adjust.
  Cold air gathers on the floor, and warm air gathers in the ceiling.
  Set the air discharge to horizontal direction during COOLING or PROGRAM DRY OPERATION, and set it downwards during HEATING OPERATION.
  Do not let the air blow directly to a person.
- Use the TIMER OPERATION effectively.
  It takes some time until the indoor temperature reaches the set temperature. It is advisable to start operation in advance using TIMER OPERATION.

8. MAINTENANCE (FOR SERVICE PERSONNEL)

ONLY A QUALIFIED SERVICE PERSON IS ALLOWED TO PERFORM MAINTENANCE

⚠ WARNING

- Do not use flammable gas (such as hair sprays and insecticides) near the air conditioner.
- Do not wipe the air conditioner with benzine or thinner.
  It may cause cracks, electric shocks or a fire.

⚠ CAUTION

- Do not wash the air conditioner with water.
  Doing so may result in an electric shock and fire.
- To clean the air conditioner, be sure to stop operation, and turn the power circuit breaker off. It may cause electric shock or injury.
- After cleaning, quickly turn the power supply breaker back on.

NOTE

- Do not remove the air filter except for during cleaning. Doing so may damage the unit.
- Do not install anything (such as kitchen paper) other than the approved air filters on the air inlet. Doing so may lower operation efficiency and cause freezing or leakage.

HOW TO CLEAN THE AIR FILTER

When the remote controller indicates " " or "Time to clean filter", clean the air filter.

- It indicates after running for a certain time.

NOTE

- The time until the display appears can be changed. For information on using the air conditioner in a dirty place, contact your dealer.

Stain	Time until display appears
Standard	2,500 hours (approx. 1 year)
When the amount of staining is large	1,250 hours (approx. a half year)

- Once the staining on the air filter cannot be removed, replace the filter with a new one.
  (The air filter for replacement is provided as an optional part.)
- Do not use the air conditioner in an oily environment. If oil adheres, clean the air filter and suction grille regularly.

1. **Unlock the suction grille.**
   Pull up the lock lever to unlock it.

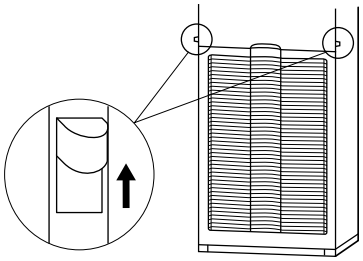

2. **Open the suction grille.**
   Slide it forward slowly.

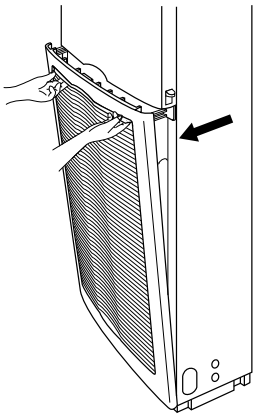

NOTE
- Do not pull on the front panel. It opens only slightly.

3. **Remove the air filters.**
   Pull the filter up and out carefully.

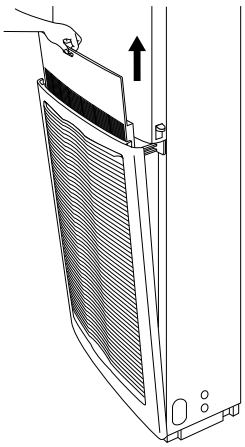

4. **Clean the air filter.**
   Use vacuum cleaner **A)** or wash the air filter with water **B)**.
   A)Using a vacuum cleaner

   B)Washing with water
   When the air filter is very dirty, use soft brush and neutral detergent.

   Remove water and dry in the shade.

NOTE
- Do not wash the air filter with water which is 50°C or more, as doing so may result in discoloration and/or deformation.
- Do not expose it to fire, as doing so may result in burning.

5. **Reset the air filter in place.**
   Reset the air filter along the filter guide of the suction grille using the reverse procedure of that in step 3.

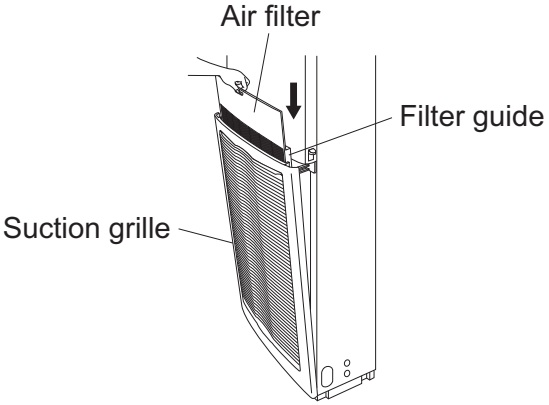

6. **Close the suction grille.**
   Close the suction grille using the reverse procedure of that in step 2.
7. **Lock the suction grille.**
   Flip down the lock lever using the reverse procedure of that in step 1.
8. **Turn off the indication " " or "Time to clean filter" displayed on the remote controller after turning on the power.**
   The indication can be turned off whether in operation or at stop.
   <In case of BRC1E, BRC1D>
   - For details, refer to the operation manual attached to the remote controller.

   <In case of BRC1C>
   - Press FILTER SIGN RESET button.

HOW TO CLEAN AIR OUTLET, SUCTION GRILLE, EXTERIOR, AND REMOTE CONTROLLER

- Wipe with a soft dry cloth.
- If a stain cannot be removed, wipe it with a cloth firmly wringed after soaked in diluted neutral detergent. After that, wipe the area with a dry cloth.
- For cleaning, wipe the flaps while holding them by hand. (If the flaps are pressed too strong while cleaning, they may come off.)

NOTE
- Do not use gasoline, benzene, thinner, polishing powder, or commercially supplied liquid insecticide. This may cause discoloration or deformation.
- Do not use water which is 50°C or more. This may cause discoloration or deformation.

[CLEANING BEFORE AND AFTER SEASONAL USE]

START UP AFTER A LONG STOP

Confirm the following

- Check that the air inlet and outlet are not blocked. Remove any obstacle.
  Obstacles may decrease the airflow rate, leading to performance decline and breakage of the devices.

Clean the air filter and exterior.

- After cleaning the air filter, make sure to attach it. (Refer to “MAINTENANCE” on page 10.)
- Turn off the indication “ ” or “Time to clean filter” displayed on the remote controller after turning on the power.
  The indication can be turned off whether in operation or at stop.
  <In case of BRC1E, BRC1D>
  - For details, refer to the operation manual attached to the remote controller.

  <In case of BRC1C>
  - Press FILTER SIGN RESET button.

Turn on the power circuit breaker at least 6 hours before operation.

- To protect the unit, this is required in order to activate the unit smoothly.
- The display on the remote controller will be shown when the power circuit breaker is turned on.

HEATING OPERATION within 6 hours after the power is supplied to the power circuit breaker.

- Some models perform the following operation to protect the devices.
  If the HEATING OPERATION is performed within 6 hours after the power is supplied to the power circuit breaker, the indoor fan stops for about 10 minutes during the outdoor unit operation to protect the devices.
  The above operation is performed not only at the time of installation, but every time the power circuit breaker is turned on/off.

WHAT TO DO TO STOP THE SYSTEM FOR A LONG PERIOD

Turn on FAN OPERATION for a half day and dry the unit.

- This will prevent generation of mould.

Turn off the power circuit breaker (only for R410A refrigerant).

- When the power circuit breaker is turned on, low wattage is consumed even if the system is not operating.
  Turn off the power circuit breaker for saving energy.
- The display on the remote controller will vanish when the power circuit breaker is turned off.

Clean the air filter and exterior.

- Be sure to replace the air filter to its original place after cleaning.
  Refer to “MAINTENANCE” on page 10.

9. NOT A MALFUNCTION OF THE AIR CONDITIONER

This unit is equipped with a refrigerant leak detector for safety. To be effective, the unit must be electrically powered at all times after installation, other than short service intervals (only for R32 refrigerant).

The following symptoms do not indicate air conditioner malfunction

- **HEATING OPERATION within 6 hours after the power is supplied to the power circuit breaker.**
  Some models perform the following operation to protect the devices.
  If the HEATING OPERATION is performed within 6 hours after the power is supplied to the power circuit breaker, the indoor fan stops for about 10 minutes during the outdoor unit operation to protect the devices.
  The above operation is performed not only at the time of installation, but every time the power circuit breaker is turned on/off.
  For comfort heating, it is recommended not to turn off the power circuit breaker during HEATING OPERATION.

I. THE SYSTEM DOES NOT OPERATE

- **The system does not restart immediately after the ON/OFF button is pressed.**
- **The system does not restart immediately when TEMPERATURE SETTING button is returned to the former position after pushing the button.**
  If the OPERATION lamp lights, the system is in normal condition.
  It does not restart immediately because a safety device operates to prevent overload of the system. After approx. 3 minutes, the system will turn on again automatically.
- **The system does not start when the display shows “ ” and it flashes for few seconds after pressing an operation button.**
  This is because the system is under centralized control. Flashes on the display indicates that the system cannot be controlled by the remote controller.

- **HEATING OPERATION within 6 hours after the power is supplied to the air conditioner.**
  Some models perform the following operation to protect the devices.
  If the HEATING OPERATION is performed within 6 hours after the power is supplied to the air conditioner, the indoor fan stops for about 10 minutes during the outdoor unit operation to protect the devices.
  The above operation is performed not only at the time of installation, but every time the power circuit breaker is turned off/on.
- **The outdoor unit stops.**
  This is because the indoor temperature has reached the set temperature. The indoor unit is in the FAN OPERATION.
  COOLING OPERATION (AUTOMATIC COOLING OPERATION): Lower the set temperature.
  HEATING OPERATION (AUTOMATIC HEATING OPERATION): Raise the set temperature.
  The operation starts after a while when the system is in normal condition.
- **The remote controller displays “ ”, and air discharge stops.**
  This is because the system automatically switches to DEFROST OPERATION to prevent a decrease in heating capacity when frost on the outdoor unit increases.
  After 6 to 8 minutes (maximum 10 minutes), the system returns to its original operation.

II. THE OPERATION SOMETIMES STOPS.

- **The remote controller displays “U4” and “U5”, and the operation stops. However, it will restart in a few minutes.**
  This is because communication between the units is shut off and stops the operation due to noise caused by devices other than the air conditioner.
  When the electrical noise decreases, the system automatically restarts.

III. THE FAN SPEED IS DIFFERENT FROM THE SETTING.

- **Even if the fan speed control button is pressed, the fan speed does not change.**
  During the COOLING OPERATION, the airflow rate is lowered to prevent the carryover of melted water. In addition, during DEFROST OPERATION (in the HEATING OPERATION), the unit stops discharging air so it does not blow directly toward your body.
  After a while, the airflow rate can be changed. (The airflow rate cannot be set for the PROGRAM DRY OPERATION.)
  When the room temperature exceeds the set temperature the indoor unit goes into whisper mode. It takes some time until the airflow rate changes.
  Raise the set temperature. After a while, the airflow rate changes.

IV. AIR BLOW DIRECTION IS NOT AS SPECIFIED.

- **Actual air blow direction is not as shown on the remote controller.**
- **Automatic swing setting does not work.**
  This is because the airflow rate is automatically controlled.
  After a while, the airflow direction can be changed.

V. THE AIRFLOW DIRECTION DIFFERS FROM THE REMOTE CONTROLLER DISPLAY.

- **The airflow flaps do not swing when the remote controller displays the swing operation.**
  <HEATING OPERATION>
  This is because the airflow direction from the centre air outlet is controlled when the indoor temperature is higher than the set temperature.
  After a while, the swing operation starts.
  (Refer to “Movement of left and right airflow flaps” on page 9.)
- **The airflow direction display of the remote controller differs from the actual operation of the airflow flaps.**
  <HEATING OPERATION>
  This is because the airflow direction from the centre air outlet is controlled immediately after the start of operation or when the indoor temperature is higher than the set temperature.
  After a while, the airflow direction changes to the set direction.
  (Refer to “Movement of left and right airflow flaps” on page 9.)

VI. WHITE MIST COMES OUT OF A UNIT

- **When humidity is high during COOLING OPERATION (In oily or dusty places)**
  If the inside of an indoor unit is extremely contaminated, the temperature distribution inside a room becomes uneven. It is necessary to clean the inside of the indoor unit. Ask your Daikin dealer for details on cleaning the unit. This operation requires a qualified service person.
  Check the usage environment.
- **When the operation is switched to the HEATING OPERATION during or after the DEFROST OPERATION.**
  Moisture generated by DEFROST becomes steam and will float around.
  When the remote controller display shows " ", the unit is in DEFROST OPERATION.

VII. NOISE OF AIR CONDITIONERS

- **A ringing sound after the unit starts.**
  This sound is generated when the motors for driving the airflow flaps are working.
  It will quiet down after about a minute.
- **A continuous flow "Shuh" sound is heard when the systems is in COOLING or DEFROST OPERATION.**
  This is the sound of refrigerant gas flowing through both indoor and outdoor units.
- **A "Shuh" sound which is heard at the start or immediately after the stop of operation or which is heard at the start or immediately after the stop of DEFROST OPERATION.**
  This is the noise of refrigerant caused by flow stop and flow change.
  During HEATING OPERATION, the system switches to DEFROST OPERATION automatically. The remote controller shows " ".
  After 6 to 8 minutes (maximum 10 minutes), the system returns to its original operation.
- **A continuous flow "Shah" sound is heard when the system is in COOLING OPERATION or at a stop.**
  The noise is heard when the drain pump is in operation.
  Moisture removed from the indoor air during the COOLING OPERATION is drained. (The draining device is provided as an optional part.)
- **A "Pishi-pishi" squeaking sound is heard when the system is in operation or after the stop of operation.**
  Expansion and contraction of plastic parts caused by temperature change makes this noise.

VIII. DUST FROM THE UNITS

- **Dust may blow out from the unit after starting operation from long resting time.**
  Dust absorbed by the unit blows out.

IX. THE UNITS GIVE OFF ODORS

- **During operation**
  The unit absorbs the smell of rooms, furniture, cigarettes, etc., and then emits them.
  If odor is a concern, you can set to zero airflow rate when the indoor temperature reaches the set temperature.
  For details, contact your Daikin dealer.

X. THE UNIT DOES NOT COOL EFFECTIVELY.

- **The unit is operating in program dry mode.**
  This is because program dry mode operates so that the indoor temperature decreases as little as possible.
  Lower the indoor temperature using COOLING OPERATION, and then use PROGRAM DRY OPERATION.
  (Refer to "CHARACTERISTICS OF THE PROGRAM DRY OPERATION" on page 8.)

- Read through characteristics of the COOLING OPERATION, characteristics of the HEATING OPERATION, and characteristics of the PROGRAM DRY OPERATION on page 7, 8.

10. TROUBLE SHOOTING

This unit is equipped with a refrigerant leak detector for safety. To be effective, the unit must be electrically powered at all times after installation, other than short service intervals (only for R32 refrigerant).

Please check before requesting a service call.

1. If the system does not operate at all.

- Check if fuse has blown.
  Turn off the power supply.
- Check if the power circuit breaker is blown.
  Turn the power on with the power circuit breaker switch in the off position.
  Do not turn the power on with the power circuit breaker switch in the trip position.
  (Contact your dealer.)

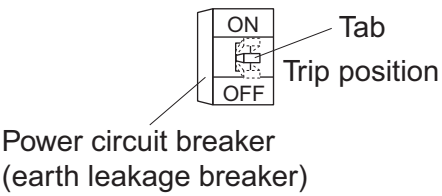

- Check if there is a power failure.
  Wait until power is restored. If power failure occurs during operation, the system automatically restarts immediately after the power supply recovers.

2. **If the system stops operating after operation is complete.**
   - Check if the air inlet or outlet of outdoor or indoor unit is blocked by obstacles.
     Remove the obstacle and make it well-ventilated.
   - Check if the air filter is clogged.
     Ask a qualified service person to clean the air filters.
     (Refer to “MAINTENANCE” on page 10.)
     If the air filter is clogged, the airflow rate will drop and as a result the performance will also drop.
     In addition, this may cause dew condensation at the air outlet.
     (Refer to “MAINTENANCE” on page 10.)
3. **The system operates but it does not sufficiently cool or heat.**
   - If the air inlet or outlet of the indoor or the outdoor unit is blocked with obstacles.
     Remove the obstacle and make it well-ventilated.
     Obstacles decrease the airflow rate, and cause performance decrease and breakage when discharged air is suctioned.
     They cause a waste of electricity, and that may stop the devices.
   - If the air filter is clogged.
     Ask a qualified service person to clean the air filters.
     (Refer to “MAINTENANCE” on page 10.)
     A decrease in the airflow volume of the air conditioner will result and the performance of the air conditioner will be degraded if the air filter is clogged with dust or dirt.
     In addition, this may cause dew condensation at the air outlet.
     (Refer to “MAINTENANCE” page 10.)
   - If the set temperature is not proper (Set to an appropriate temperature, airflow rate, and discharge direction.).
   - If the FAN SPEED button is set to LOW SPEED (Set to an appropriate temperature, airflow rate, and discharge direction.).
   - If the airflow angle is not proper.
     (Refer to “AIRFLOW DIRECTION ADJUST” on page 8.)
   - If the doors or the windows are open. Shut doors or windows to prevent wind from coming in.
   - If direct sunlight enters the room (when cooling). Use curtains or blinds.
   - When there are too many inhabitants in the room (when cooling).
   - If the heat source of the room is excessive (when cooling).
4. **Though the on/off button was not pressed, the unit started or stopped.**
   - Are you sure that the ON/OFF timer operation is not used?
     Turn off the ON/OFF timer.
   - Are you sure that a remote control device is not connected?
     Contact the central control room that directed the stop.
   - Are you sure that the display for centralized control is not lit?
     Contact the central control room that directed the stop.

If the problem is not solved after checking the above points, please do not try to repair it yourself. In such cases, always ask your local dealer. At this time, please tell the symptom and model name (written on the model name plate).

5. **The unit is operating by itself.**

- **The fan is spinning by itself, when the unit is turned off. (The operation light is flashing)**
  It is because the refrigerant leakage sensor started working.
  - There is a risk of refrigerant leakage. Please ventilate the room and contact your dealer.
  - If there is no leak, the fan will turn itself off automatically in a few minutes.
    Sometimes, the refrigerant leakage sensor detects by mistake substances other than refrigerant, such as insecticides or hairsprays (only for R32 refrigerant).

6. **It does not cool / warm up.**

- **When in cooling or heating mode, it switches to “Strong air flow” ventilation setting.**
  It is because the refrigerant leakage sensor started working
  - There is a risk of refrigerant leakage. Please ventilate the room and contact your dealer.
  - If there is no leak, it will return to the previous mode of operation automatically after a few minutes.
    Sometimes, the refrigerant leakage sensor detects by mistake substances other than refrigerant, such as insecticides or hairsprays (only for R32 refrigerant).

7. Fault diagnosis by remote controller

- **If the remote controller shows the code A0.**
  - There is a risk of refrigerant leakage. Please ventilate the room and contact your dealer.
  - If there is no refrigerant leakage, please wait a few minutes.
    Sometimes, the refrigerant sensor detects by mistake substances other than refrigerant, such as insecticides or hairsprays (only for R32 refrigerant).
- **If the remote controller shows the code CH.**
  There is a risk of follows. Please contact your dealer (R32 refrigerant only).
  Malfunction of refrigerant leakage sensor.
  Cable of refrigerant leakage sensor is broken.
  Cable connection of refrigerant leakage sensor is not complete.
  Malfunction of main printed-circuit board.

11. DISPOSAL REQUIREMENTS

Your product and the batteries supplied with the controller are marked with this symbol. This symbol means that electrical and electronic products and batteries shall not be mixed with unsorted household waste. For batteries, a chemical symbol can be printed beneath the symbol. This chemical symbol means that the battery contains a heavy metal above a certain concentration. Possible chemical symbols are:

■ Pb: lead (>0.004%)

Do not try to dismantle the system yourself: the dismantling of the product, treatment of the refrigerant, of oil and of other parts must be done by a qualified installer in accordance with relevant local and national legislation. Units and waste batteries must be treated at a specialized treatment facility for re-use, recycling and recovery. By ensuring correct disposal, you will help to prevent potential negative consequences for the environment and human health. Please contact the installer or local authority for more information.

DAIKIN INDUSTRIES CZECH REPUBLIC s.r.o.
U Nové Hospody 1/1155, 301 00 Plzeň Skvrňany, Czech Republic

DAIKIN EUROPE N.V.
Zandvoordestraat 300, B-8400 Oostende, Belgium

Copyright 2017 Daikin

EAC

3P486799-1 2017.05