EN

TECHNICAL MANUAL

FWB - CT/CF

Duct units

Medium static pressure ducted fan coil units 2-8 kW

2 pipes systems 4 pipes systems Centrifugal fan Ducted

FEATURES

- Multi speed motor
- Heat exchanger up to 4 rows
- Water connections
- ABS centrifugal fans

CE

UT66002760-02 04/21

DAIKIN

TABLE OF CONTENTS

1 MAIN FEATURES . . . . . p. 4

1.1 PERFORMANCE AND COMPACTNESS IN RECESSED CEILING INSTALLATIONS . . . . . p. 4

2 MAIN COMPONENTS . . . . . p. 4

STRUCTURE. . . . . p. 4

ELECTRIC MOTOR. . . . . p. 4

AIR FILTER . . . . . p. 4

2.1 AIR INTAKE. . . . . p. 4

HEAT EXCHANGER . . . . . p. 4

FANS . . . . . p. 4

3 INSTALLATION. . . . . p. 5

3.1 INSTALLATION REQUIREMENTS. . . . . p. 5

3.2 ASSEMBLY OF UNITS . . . . . p. 6

4 AVAILABLE ACCESSORIES . . . . . p. 7

5 RATED TECHNICAL DATA . . . . . p. 8

6 WEIGHTS. . . . . p. 10

7 SOUND POWER LEVELS FOR 2-PIPES OCTAVE BAND. . . . . p. 10

7 SOUND POWER LEVELS FOR OCTAVE BAND 4 PIPE SYSTEMS AND 1 ROW . . . . . p. 11

8 OVERALL DIMENSIONS . . . . . p. 12

9 ELECTRICAL CONNECTIONS. . . . . p. 14

10 ELECTRICAL WIRES. . . . . p. 15

11 ACCESSORIES. . . . . p. 23

12 MAINTENANCE . . . . . p. 25

12.1 CLEANING THE AIR FILTER. . . . . p. 25

12.2 CLEANING THE HEAT EXCHANGER . . . . . p. 25

OPERATING LIMITS
Thermal carrier fluid: **water**
Water temperature: from **5°C ÷ +95°C**
Air temperature: from **-20°C ÷ 43°C**
Supply voltage: **230 V +/- 10 %**
Maximum water pressure during operation: **16 bar**
Limit of room air relative humidity: **RH<85% not condensing**

1 MAIN FEATURES

PERFORMANCE AND COMPACTNESS IN RECESSED CEILING INSTALLATIONS

The FWB-C ducted unit has been conceived for air conditioning interiors where the installation of high-performance medium-head units with reduced overall dimensions is required. The range features 8 models with air flows of from 300 to 1200 m3/h with over 70Pa available static pressure and cooling powers from 2 to 8 kW.
The heat exchanger enables FWB-C to be used under a whole variety of operating conditions. The weight-bearing structure in fact houses a 3- or 4-rows exchanger which can be combined with an additional 1- or 2-rows exchanger for exceptional performance even with low temperature differentials.
Heat exchanger can be optimized for centralized applications such as district cooling. FWB-C was designed to ceiling horizontal installation.
The main condensate drip tray is situated inside the structure of the unit and is at a positive pressure relative to the drain outlet to facilitate condensate drainage.
A wide range of wall-mounted controllers is available, including microprocessor controllers with display. Heating elements complete with safety devices are available to supplement the hydronic system.

2 MAIN COMPONENTS

STRUCTURE

Built from galvanised steel sheet, heat and sound insulated by means of Class 1 self-extinguishing panels. Reduced height to facilitate installation in a horizontal position in a false ceiling. The structure incorporates a drip tray and condensate drain outlet.
The bearing structure allows to combine a large range of accessories in suction and air delivery in order to obtain the optimized unit configuration.

ELECTRIC MOTOR

Single-phase asynchronous multi-speed electric motor with permanently connected capacitor and thermal protector, mounted on vibration-damping supports.

AIR FILTER

Washable air filter, made of acrylic fibre, filtration class G3, applied on the air intake; may be pulled out from below.

AIR INTAKE

Air intake from the front or bottom of the unit, according to system requirements.

HEAT EXCHANGER

High efficiency standard with 3 rows, but also available with 4 rows upon request, heat exchanger made with copper piping and aluminium fins blocked to pipings by mechanical expansion, provided with brass manifolds and air vent valve.The heat exchanger usually comes with water connections mounted on the left, but it can be turned by 180°. High-efficiency heat exchangers optimized for district cooling applications are available on request.

FANS

Double suction centrifugal fans made with ABS or aluminium, with statically and dynamically balanced forward-curving blades, directly coupled to the electric motor.

3 INSTALLATION

⚠ **WARNING:** unit installation and start-up must be entrusted to competent personnel and performed in a workmanlike manner, in accordance with current regulations.

⚠ **WARNING:** Install the ducted unit, the line switch (IL) and/or all remote controls in a position out of the reach of persons who are in the bathroom or in the shower.

⚠ **DANGER:** The unit may be used by children of at least 8 years of age and by persons with reduced physical, sensory, or mental capabilities, or who lack experience or the necessary knowledge, provided that they are supervised or after they have received instructions relating to the safe use of the unit and understand the inherent dangers. Children must not play with the unit. Cleaning and maintenance to be carried out by the user must not be performed by unsupervised children.

☞ **IMPORTANT:** It is advisable to install any accessories on the standard unit prior to positioning the latter, making reference to the technical sheets. The air intake and outlet have a rectangular cross-section, with pre-cut holes for fastening the available accessories.

The heat exchanger connections can be switched over to the opposite side by carrying out the following steps:

— remove the upper closing panel.
— remove the collecting condensate tray.
— remove the heat exchanger module by taking out the fastening screws (2 per side).
— turn the heat exchanger by 180° (on the vertical axis) and screw it back into the unit again.
— reassemble the tray and the upper closing panel.

3.1 INSTALLATION REQUIREMENTS

Some rules to follow

— Vent air from the exchanger while the pumps are off. For this purpose use the air vent valves situated next to the exchanger connections.
— All ducts, especially the outlet ducts, must be insulated with anti-condensation material.
— An inspection panel must be provided in proximity to the unit to enable maintenance and cleaning operations.
— Install the control panel on the wall; choose an accessible position from where functions may be easily set and which is suitable for taking temperature readings, where applicable. Avoid positions directly exposed to sunlight or direct currents of hot or cold air and make sure there are no obstacles which may preclude a correct temperature reading.

⚠ **WARNING:**

In normal operation, particularly with the fan at minimum speed and ambient air with high relative humidity, condensation may form on the air outlet and on some external parts of the unit.

To avoid such issues while always remaining within the operating limits envisaged for the unit, it is necessary to limit the inlet temperature of the water inside the heat exchanger. In particular, the difference between the air dew point (T_A,D_P) and the inlet water temperature (T_W) must NOT exceed 14 °C, according to the following relationship: **TW>TA,DP-14 °C**

Example: in the case of ambient air at 25 ° C with 75% relative humidity, the dew point temperature is about 20 ° C and therefore the inlet temperature of the water in the battery must be greater then:

— 20-14 = 6 °C in order to avoid condensation on a fancoil equipped with a valve.
— 20-12 = 8 °C If the valve kit accessory can not be installed.

Fan coil with valve								
		Air temperature dry bulb (°C)						
		21	23	25	27	29	31	33
Relative humidity %	40	5	5	5	5	5	5	5
	50	5	5	5	5	5	6	8
	60	5	5	5	5	7	9	11
	70	5	5	6	8	9	11	13
	80	5	6	8	10	12	14	16
	90	6	8	10	12	14	16	18

Fan coil without valve								
		Air temperature dry bulb (°C)						
		21	23	25	27	29	31	33
Relative humidity %	40	6	6	6	6	6	6	6
	50	6	6	6	6	6	8	10
	60	6	6	6	7	9	11	13
	70	6	6	8	10	11	13	15
	80	6	8	10	12	12	16	18
	90	8	10	12	14	14	18	20

In the event the indoor unit is stopped for a prolonged period, with the fan stopped and circulation of cold water in the heat exchanger, condensation may also form on the unit's exterior. In this case it is advisable to install the 3-way (or 2-way) valve accessory in order to stop the flow of water in the coil when the fan is stopped.

During wintertime periods of shut down, drain water from the system, to prevent ice from forming. If anti-freeze solutions are used, check for their freezing point using the table below.

% Glycol by weight	Freezing temperature (°C)	Capacity adjustment	Pressure drop adjustment
0	0	1,00	1,00
10	-4	0,97	1,05
20	-10	0,92	1,10
30	-16	0,87	1,15
40	-24	0,82	1,20

All copying, even partial, of this manual is strictly forbidden

3.2 TROUBLESHOOTING

If the unit is not working properly, before calling a service engineer carry out the checks indicated in the table below.

If the problem cannot be solved, contact your dealer or the nearest service centre.

PROBLEM	CAUSE	SOLUTION
The unit fails to work	No power supply	Restore the power supply
	The automatic safety cutout has tripped	Call a service centre for assistance
	The on/off switch is on	Start the unit by moving the switch to ON
The unit provides insufficient cooling or heating	The air filter is dirty or clogged	Clean the air filter
	An obstacle is obstructing the air intake or outlet	Remove the obstacle
	Air is trapped inside the heat exchanger	Call the installer for assistance
	There are open windows and/or doors	Close windows and/or doors
	The minimum speed has been selected	Select medium or maximum speed
The unit "leaks" water	The unit has not been installed with the correct inclination	Call the installer for assistance
	The drainage outlet is clogged	Call the installer for assistance

3.3 ASSEMBLY OF UNITS

Mounting the unit

Insert the vibration dampers provided in the 4 slots indicated for ceiling installation

Fasten the base unit to the ceiling or wall using at least 4 of the 8 slots provided.

— It is recommended to use 8MA threaded bars plus screw anchors of adequate capacity to bear the weight of the unit, and to prepare the positioning of the unit using 3 8MA bolts (2 in the lower part, 1 in the upper part as shown in figure p. 6) and two washers for each bar. Before tightening the lock nut, adjust the main nut so as to assure that the unit is properly inclined so as to facilitate condensate drainage (figure p. 6). To obtain the proper inclination, tilt the unit so that the intake side is slightly lower (approximately 10 mm) than the outlet side. Make the plumbing connections to the heat exchanger and, where the cooling function is to be used, to the condensate drainage outlet. Use one of the two tray drain outlets, which can be seen on the outside of the unit side panels.

— To connect the unit to the drainage line, use a flexible rubber hose and secure it to the pre-selected drain pipe (ø 3/8") using a metal clamp (use the drain outlet situated on the plumbing connection side).

—

» Ceiling installation unit

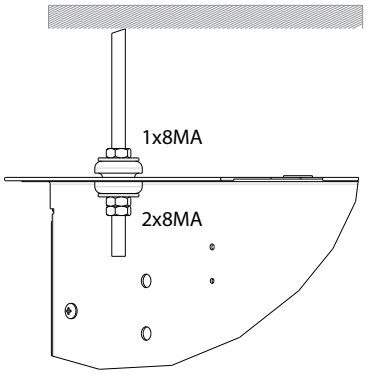

» Condensate discharge proper inclination

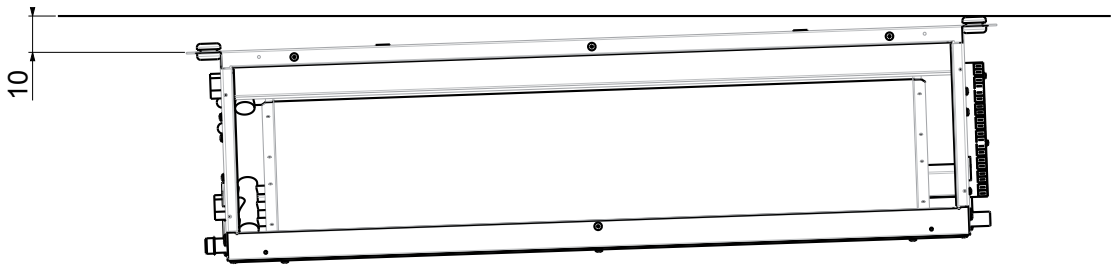

4 AVAILABLE ACCESSORIES

Electronic microprocessor control panels with display	
FWECSAP	Circuit board for FWECS control
FWECSAC	User interface with display for FWECS controller
FWEC1A	FWEC1A electronic controller with display
FWEC2A	FWEC2A electronic controller with display
FWEC3A	FWEC3A electronic controller with display
FWHSKA	Humidity sensor for FWEC2A/3A, FWECS
FWTSKA	Water sensor for FWEC1A/2A/3A and FWECS controllers
Auxiliary water drip trays, insulating shell, condensate drainage pump	
CDRP1A	Condensate drainage pump kit
Electrical heating elements	
EH	Heating element with installation kit, relay box and safety devices
Accessories	
EPIMSB6	Power interface for connecting in parallel up to 4 fan coil units to the one controller
EDPD	Auxiliary water drip tray
Valve kits	
2-way valves, ON/OFF or MODULATING actuator, 230 V or 24 V power supply, hydraulic kit, for additional heat exchanger	
2-way valve, ON/OFF or MODULATING actuator, 230 V or 24 V power supply, hydraulic kit, for main heat exchanger	
3-way valves, ON/OFF or MODULATING actuator, 230 V or 24 V power supply, hydraulic kit, for additional heat exchanger	
3-way valves, ON/OFF or MODULATING actuator, 230 V or 24 V power supply, hydraulic kit, for heat exchanger	
2-way valves pressure independent, ON/OFF or MODULATING actuator, 230 V or 24 V power supply, hydraulic kit, for main and additional heat exchanger	

All copying, even partial, of this manual is strictly forbidden

5 RATED TECHNICAL DATA

» 2 pipes

FWB-C			04			05			06			08		
Speed			min	med	max	min	med	max	min	med	max	min	med	max
Declared speed			2,5,7			1,5,7			1,6,7			1,4,7		
Rated air flow	(E)	m^3/h	109	246	276	171	275	341	195	360	402	305	532	652
Available static pressure	(E)	Pa	10	50	63	19	50	77	19	50	63	17	50	75
Power input	(E)	W	24	57	82	34	69	106	34	85	106	76	143	192
Maximum current absorption		A	0,40			0,56			0,56			1,10		
Total cooling capacity	(1)(E)	kW	0,92	1,72	1,90	1,27	1,90	2,27	1,57	2,69	2,96	1,92	3,17	3,68
Sensible cooling capacity	(1)(E)	kW	0,61	1,21	1,34	0,89	1,34	1,59	1,07	1,86	2,03	1,42	2,39	2,81
FCEER class	(E)		D									E		
Water flow	(1)	l/h	160	306	340	222	339	408	274	476	527	343	568	664
Water pressure drop	(2)(E)	kPa	2	5	6	3	6	8	3	7	9	3	8	11
Heating capacity	(3)(E)	kW	0,88	1,81	1,99	1,33	1,98	2,35	1,59	2,80	3,10	2,35	3,71	4,31
FCCOP class	(E)		D											
Water flow	(3)	l/h	153	315	346	231	345	408	276	488	538	408	644	749
Water pressure drop	(3)(E)	kPa	1	4	5	2	5	7	2	6	8	4	9	11
Standard coil - number of rows			3			3			4			3		
Total sound power level	(4)	dB(A)	28	49	52	39	50	54	39	50	54	38	52	58
Inlet + radiated sound power level	(4)(E)	dB(A)	26	47	50	37	48	52	37	48	52	36	50	56
Outlet sound power level	(4)(E)	dB(A)	25	46	49	36	47	51	36	47	51	35	49	55
Water content - standard coil		dm^3	1,20			1,20			1,60			1,60		
Power supply cable type			N07V-K											
Cross-section area of power cables	(5)	mm^2	1,00			1,00			1,00			1,50		
Safety fuse F		A	1			1			1			2		
Fuses type			gG											

FWB-C			10			11			15			17		
Speed			min	med	max	min	med	max	min	med	max	min	med	max
Declared speed			1,6,7			1,6,7			5,6,7			5,6,7		
Rated air flow	(E)	m^3/h	333	687	760	333	687	760	1050	1163	1289	1050	1163	1289
Available static pressure	(E)	Pa	12	50	61	12	50	61	40	50	60	40	50	60
Power input	(E)	W	76	167	192	76	167	192	235	280	332	235	280	332
Maximum current absorption		A	1,10			1,10			2,10			2,10		
Total cooling capacity	(1)(E)	kW	2,22	4,22	4,63	2,44	4,79	5,23	6,15	6,66	7,21	6,91	7,49	8,12
Sensible cooling capacity	(1)(E)	kW	1,60	3,09	3,39	1,70	3,33	3,64	4,51	4,88	5,29	4,83	5,23	5,67
FCEER class	(E)		D											
Water flow	(1)	l/h	394	753	828	432	850	930	1095	1191	1295	1225	1333	1448
Water pressure drop	(2)(E)	kPa	2	7	8	3	10	12	13	16	18	20	23	26
Heating capacity	(3)(E)	kW	2,54	4,76	5,17	2,63	5,03	5,49	6,68	7,22	7,80	7,18	7,80	8,46
FCCOP class	(E)		D											
Water flow	(3)	l/h	442	827	898	457	875	955	1162	1256	1357	1248	1356	1472
Water pressure drop	(3)(E)	kPa	2	7	8	3	9	11	12	14	16	17	20	23
Standard coil - number of rows			3			4			3			4		
Total sound power level	(4)	dB(A)	38	55	58	38	55	58	61	63	69	61	63	69
Inlet + radiated sound power level	(4)(E)	dB(A)	36	53	56	36	53	56	59	61	67	59	61	67
Outlet sound power level	(4)(E)	dB(A)	35	52	55	35	52	55	58	60	66	58	60	66
Water content - standard coil		dm^3	2,50			3,30			2,50			3,30		
Power supply cable type			N07V-K											
Cross-section area of power cables	(5)	mm^2	1,50			1,50			1,50			1,50		
Safety fuse F		A	2			2			2			2		
Fuses type			gG											

(1) Water temperature 7°C / 12°C, air temperature dry bulb 27°C, wet bulb 19°C (47% relative humidity) according to EN1397:2015
(2) Water temperature 7°C / 12°C, air temperature dry bulb 27°C, wet bulb 19°C (47% relative humidity)
(3) Water temperature 45°C / 40°C, air temperature 20°C
(4) Sound power measured according to standards ISO 3741 and ISO 3742
(5) Sound pressure measured at a distance of 4 m in a free field with a directivity factor of 1
(E) EUROVENT certified data
Power supply 230-1-50 (V-ph-Hz)

» 4 pipes

FWB-C			04			05			06			08		
Speed			min	med	max	min	med	max	min	med	max	min	med	max
Declared speed			2,5,7			1,5,7			1,6,7			1,4,7		
Rated air flow	(E)	m^3/h	109	243	270	170	272	336	195	357	398	302	524	642
Available static pressure	(E)	Pa	10	50	63	19	50	77	19	50	63	17	50	75
Power input	(E)	W	24	57	82	34	69	106	34	85	106	76	143	192
Maximum current absorption		A	0,40			0,56			0,56			1,10		
Total cooling capacity	(1)(E)	kW	0,92	1,70	1,86	1,26	1,88	2,24	1,57	2,67	2,93	1,89	3,13	3,64
Sensible cooling capacity	(1)(E)	kW	0,61	1,20	1,31	0,88	1,33	1,57	1,07	1,84	2,01	1,41	2,35	2,78
FCEER class	(E)		D									E		
Water flow	(2)	l/h	160	302	333	221	335	404	274	473	522	339	562	656
Water pressure drop	(2)(E)	kPa	2	5	6	3	6	8	3	7	9	3	8	11
Heating capacity	(3)(E)	kW	1,14	1,93	2,06	1,55	2,07	2,32	2,09	3,09	3,29	2,80	3,82	4,24
FCCOP class	(E)		C			D			C			D		
Water flow	(3)	l/h	100	169	180	136	181	204	183	271	288	245	334	371
Water pressure drop	(3)(E)	kPa	1	2	3	2	3	3	2	3	4	3	5	6
Total sound power level	(4)	dB(A)	28	49	52	39	50	54	39	50	54	38	52	58
Additional coil - number of rows			1			1			1			1		
Inlet + radiated sound power level	(4)(E)	dB(A)	26	47	50	37	48	52	37	48	52	36	50	56
Outlet sound power level	(4)(E)	dB(A)	25	46	49	36	47	51	37	47	51	35	49	55
Water content - additional coil		dm^3	0,47			0,47			0,59			0,59		
Power supply cable type			N07V-K											
Cross-section area of power cables	(5)	mm^2	1,00			1,00			1,00			1,50		
Safety fuse F		A	1			1			1			2		
Fuses type			gG											

FWB-C			10			11			15			17		
Speed			min	med	max	min	med	max	min	med	max	min	med	max
Declared speed			1,6,7			1,6,7			5,6,7			5,6,7		
Rated air flow	(E)	m^3/h	333	683	755	333	683	755	1050	1163	1289	1050	1163	1289
Available static pressure	(E)	Pa	12	50	61	12	50	61	40	50	60	40	50	60
Power input	(E)	W	76	167	192	76	167	192	235	280	332	235	280	332
Maximum current absorption		A	1,10			1,10			2,10			2,10		
Total cooling capacity	(1)(E)	kW	2,22	4,20	4,60	2,44	4,76	5,20	6,15	6,66	7,21	6,91	7,49	8,12
Sensible cooling capacity	(1)(E)	kW	1,60	3,07	3,36	1,70	3,31	3,62	4,51	4,88	5,29	4,83	5,23	5,67
FCEER class	(E)		D											
Water flow	(2)	l/h	394	749	822	432	846	925	1095	1191	1295	1225	1333	1448
Water pressure drop	(2)(E)	kPa	2	7	8	3	10	12	13	16	18	20	23	26
Heating capacity	(3)(E)	kW	3,40	5,17	5,45	3,40	5,17	5,45	6,42	6,73	7,06	6,42	6,73	7,06
FCCOP class	(E)		D											
Water flow	(3)	l/h	297	452	477	297	452	477	562	590	618	562	590	618
Water pressure drop	(3)(E)	kPa	6	13	14	6	13	14	19	21	22	19	21	22
Total sound power level	(4)	dB(A)	38	55	58	38	55	58	61	63	69	61	63	69
Additional coil - number of rows			1			1			1			1		
Inlet + radiated sound power level	(4)(E)	dB(A)	36	53	56	36	53	56	59	61	67	59	61	67
Outlet sound power level	(4)(E)	dB(A)	35	52	55	35	52	55	58	60	66	58	60	66
Water content - additional coil		dm^3	0,97			0,97			0,97			0,97		
Power supply cable type			N07V-K											
Cross-section area of power cables	(5)	mm^2	1,50			1,50			1,50			1,50		
Safety fuse F		A	2			2			2			2		
Fuses type			gG											

(1) Water temperature 7°C / 12°C, air temperature dry bulb 27°C, wet bulb 19°C (47% relative humidity) according to EN1397:2015
(2) Water temperature 7°C / 12°C, air temperature dry bulb 27°C, wet bulb 19°C (47% relative humidity)
(3) Water temperature 65°C / 55°C, air temperature 20°C
(4) Sound power measured according to standards ISO 3741 and ISO 3742
(5) Sound pressure measured at a distance of 4 m in a free field with a directivity factor of 1
(E) EUROVENT certified data
Power supply 230-1-50 (V-ph-Hz)

All copying, even partial, of this manual is strictly forbidden

6 WEIGHTS

FWB-C		04	05	06	08	10	11	15	17
2 pipes	kg	24,4	25,4	33,0	36,0	45,0	45,0	51,0	51,0
4 pipes	kg	25,8	26,8	34,6	37,6	47,5	47,5	53,5	53,5

7 SOUND POWER LEVELS FOR 2-PIPES OCTAVE BAND

Model	Vr	Lw IN+R	125 Hz	250 Hz	500 Hz	1000 Hz	2000 Hz	4000 Hz	8000 Hz	Lw OUT	125 Hz	250 Hz	500 Hz	1000 Hz	2000 Hz	4000 Hz	8000 Hz
		dB(A)	dB	dB	dB	dB	dB	dB	dB	dB(A)	dB	dB	dB	dB	dB	dB	dB
04	min(2)	**26**	30,3	28,0	24,3	19,9	16,3	2,1	2,1	**25**	0,0	25,8	23,5	19,8	15,4	11,8	0,0
	med(5)	**47**	51,2	48,9	45,2	40,8	37,2	31,2	22,5	**46**	50,2	47,9	44,2	39,8	36,2	30,2	21,5
	max(7)	**50**	54,2	51,9	48,2	43,8	40,2	34,2	25,5	**49**	53,2	50,9	47,2	42,8	39,2	33,2	24,5
05	min(1)	**37**	41,2	38,9	35,2	30,8	27,2	21,2	3,0	**36**	40,2	37,9	34,2	29,8	26,2	20,2	16,2
	med(5)	**46**	50,2	47,9	44,2	39,8	36,2	30,2	21,5	**45**	49,2	46,9	43,2	38,8	35,2	29,2	20,2
	max(7)	**52**	56,2	53,9	50,2	45,8	42,2	36,2	27,5	**51**	55,2	52,9	49,2	44,8	41,2	35,2	26,2
06	min(1)	**37**	41,2	38,9	35,2	30,8	27,2	21,2	3,0	**36**	40,2	37,9	34,2	29,8	26,2	20,2	16,2
	med(6)	**48**	52,2	49,9	46,2	41,8	38,2	32,2	23,5	**47**	51,2	48,9	45,2	40,8	37,2	31,2	22,2
	max(7)	**52**	56,2	53,9	50,2	45,8	42,2	36,2	27,5	**51**	55,2	52,9	49,2	44,8	41,2	35,2	26,2
08	min(1)	**36**	40,2	37,9	34,2	29,8	26,2	20,2	0,0	**35**	39,2	36,9	33,2	28,8	25,2	19,2	0,0
	med(4)	**50**	54,2	51,9	48,2	43,8	40,2	34,2	25,5	**49**	53,2	50,9	47,2	42,8	39,2	33,2	24,5
	max(7)	**56**	60,2	57,9	54,2	49,8	46,2	40,2	31,5	**55**	59,2	56,9	53,2	48,8	45,2	39,2	30,5
10	min(1)	**36**	40,2	37,9	34,2	29,8	26,2	20,2	0,0	**35**	39,2	36,9	33,2	28,8	25,2	19,2	0,0
	med(6)	**53**	57,2	54,9	51,2	46,8	43,2	37,2	28,5	**52**	56,2	53,9	50,2	45,8	42,2	36,2	27,5
	max(7)	**56**	60,2	57,9	54,2	49,8	46,2	40,2	31,5	**55**	59,2	56,9	53,2	48,8	45,2	39,2	30,5
11	min(1)	**36**	40,2	37,9	34,2	29,8	26,2	20,2	0,0	**35**	39,2	36,9	33,2	28,8	25,2	19,2	0,0
	med(6)	**53**	57,2	54,9	51,2	46,8	43,2	37,2	28,5	**52**	56,2	53,9	50,2	45,8	42,2	36,2	27,5
	max(7)	**56**	60,2	57,9	54,2	49,8	46,2	40,2	31,5	**55**	59,2	56,9	53,2	48,8	45,2	39,2	30,5
15	min(5)	**59**	63,2	60,9	57,2	52,8	49,2	43,2	34,5	**58**	62,1	59,8	56,1	51,7	48,1	42,1	43,4
	med(6)	**61**	65,2	62,9	59,2	54,8	51,2	45,2	36,5	**60**	64,2	61,9	58,2	53,8	50,2	44,2	35,5
	max(7)	**67**	71,2	68,9	65,2	60,8	57,2	51,2	42,5	**66**	70,2	67,9	64,2	59,8	56,2	50,2	31,5
17	min(5)	**59**	63,2	60,9	57,2	52,8	49,2	43,2	34,5	**58**	62,1	59,8	56,1	51,7	48,1	42,1	43,4
	med(6)	**61**	65,2	62,9	59,2	54,8	51,2	45,2	36,5	**60**	64,2	61,9	58,2	53,8	50,2	44,2	35,5
	max(7)	**67**	71,2	68,9	65,2	60,8	57,2	51,2	42,5	**66**	70,2	67,9	64,2	59,8	56,2	50,2	31,5

Data referring to filter G3 units at PU = 0 Pa - For all operating points and work limits not present in the upper table, refer to the factory selection program
LW _out: Octave sound power level - outlet
LW _In + R: Octave sound power level - inlet + radiated
LWA: A-weighted sound power
Vr: Certified Fan speed: (min-med-max)

7 SOUND POWER LEVELS FOR OCTAVE BAND 4 PIPE SYSTEMS AND 1 ROW

Model	Vr	Lw IN+R	125 Hz	250 Hz	500 Hz	1000 Hz	2000 Hz	4000 Hz	8000 Hz	Lw OUT	125 Hz	250 Hz	500 Hz	1000 Hz	2000 Hz	4000 Hz	8000 Hz
		dB(A)	dB	dB	dB	dB	dB	dB	dB	dB(A)	dB	dB	dB	dB	dB	dB	dB
04	min(2)	**26**	30,3	28,0	24,3	19,9	16,3	2,1	2,1	**25**	0,0	25,8	23,5	19,8	15,4	11,8	0,0
	med(5)	**47**	51,2	48,9	45,2	40,8	37,2	31,2	22,5	**46**	50,2	47,9	44,2	39,8	36,2	30,2	21,5
	max(7)	**50**	54,2	51,9	48,2	43,8	40,2	34,2	25,5	**49**	53,2	50,9	47,2	42,8	39,2	33,2	24,5
05	min(1)	**37**	41,2	38,9	35,2	30,8	27,2	21,2	3,0	**36**	40,2	37,9	34,2	29,8	26,2	20,2	16,2
	med(5)	**46**	50,2	47,9	44,2	39,8	36,2	30,2	21,5	**45**	49,2	46,9	43,2	38,8	35,2	29,2	20,2
	max(7)	**52**	56,2	53,9	50,2	45,8	42,2	36,2	27,5	**51**	55,2	52,9	49,2	44,8	41,2	35,2	26,2
06	min(1)	**37**	41,2	38,9	35,2	30,8	27,2	21,2	3,0	**36**	40,2	37,9	34,2	29,8	26,2	20,2	16,2
	med(6)	**48**	52,2	49,9	46,2	41,8	38,2	32,2	23,5	**47**	51,2	48,9	45,2	40,8	37,2	31,2	22,2
	max(7)	**52**	56,2	53,9	50,2	45,8	42,2	36,2	27,5	**51**	55,2	52,9	49,2	44,8	41,2	35,2	26,2
08	min(1)	**36**	40,2	37,9	34,2	29,8	26,2	20,2	0,0	**35**	39,2	36,9	33,2	28,8	25,2	19,2	0,0
	med(4)	**50**	54,2	51,9	48,2	43,8	40,2	34,2	25,5	**49**	53,2	50,9	47,2	42,8	39,2	33,2	24,5
	max(7)	**56**	60,2	57,9	54,2	49,8	46,2	40,2	31,5	**55**	59,2	56,9	53,2	48,8	45,2	39,2	30,5
10	min(1)	**36**	40,2	37,9	34,2	29,8	26,2	20,2	0,0	**35**	39,2	36,9	33,2	28,8	25,2	19,2	0,0
	med(6)	**53**	57,2	54,9	51,2	46,8	43,2	37,2	28,5	**52**	56,2	53,9	50,2	45,8	42,2	36,2	27,5
	max(7)	**56**	60,2	57,9	54,2	49,8	46,2	40,2	31,5	**55**	59,2	56,9	53,2	48,8	45,2	39,2	30,5
11	min(1)	**36**	40,2	37,9	34,2	29,8	26,2	20,2	0,0	**35**	39,2	36,9	33,2	28,8	25,2	19,2	0,0
	med(6)	**53**	57,2	54,9	51,2	46,8	43,2	37,2	28,5	**52**	56,2	53,9	50,2	45,8	42,2	36,2	27,5
	max(7)	**56**	60,2	57,9	54,2	49,8	46,2	40,2	31,5	**55**	59,2	56,9	53,2	48,8	45,2	39,2	30,5
15	min(5)	**59**	63,2	60,9	57,2	52,8	49,2	43,2	34,5	**58**	62,1	59,8	56,1	51,7	48,1	42,1	43,4
	med(6)	**61**	65,2	62,9	59,2	54,8	51,2	45,2	36,5	**60**	64,2	61,9	58,2	53,8	50,2	44,2	35,5
	max(7)	**67**	71,2	68,9	65,2	60,8	57,2	51,2	42,5	**66**	70,2	67,9	64,2	59,8	56,2	50,2	31,5
17	min(5)	**59**	63,2	60,9	57,2	52,8	49,2	43,2	34,5	**58**	62,1	59,8	56,1	51,7	48,1	42,1	43,4
	med(6)	**61**	65,2	62,9	59,2	54,8	51,2	45,2	36,5	**60**	64,2	61,9	58,2	53,8	50,2	44,2	35,5
	max(7)	**67**	71,2	68,9	65,2	60,8	57,2	51,2	42,5	**66**	70,2	67,9	64,2	59,8	56,2	50,2	31,5

Data referring to filter G3 units at PU = 0 Pa - For all operating points and work limits not present in the upper table, refer to the factory selection program
LW _out: Octave sound power level - outlet
LW _In + R: Octave sound power level - inlet + radiated
LW_A: A-weighted sound power
Vr: Certified Fan speed: (min-med-max)

All copying, even partial, of this manual is strictly forbidden

8 OVERALL DIMENSIONS

» FWB-C 04-05-06-08

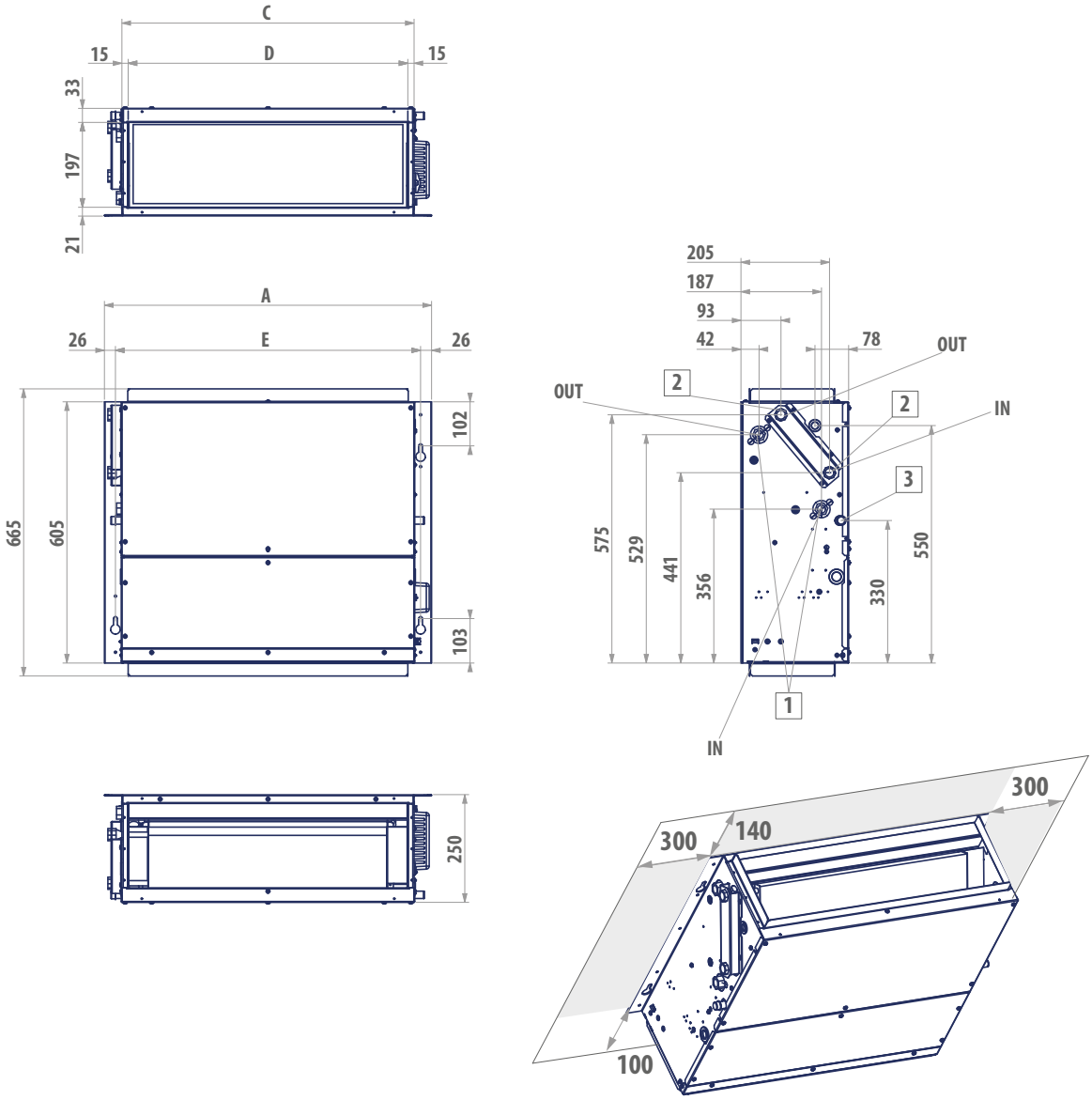

LEGEND

1 Water connections standard heat exchanger 1/2" female
2 Water connections additional heat exchanger 1/2" female
3 Condensate discharge diameter ø 17

FWB-C		04	05	06	08
A	mm	758	758	968	968
C	mm	677	677	887	887
D	mm	648	648	858	858
E	mm	707	707	917	917

» FWB-C 10-11-15-17

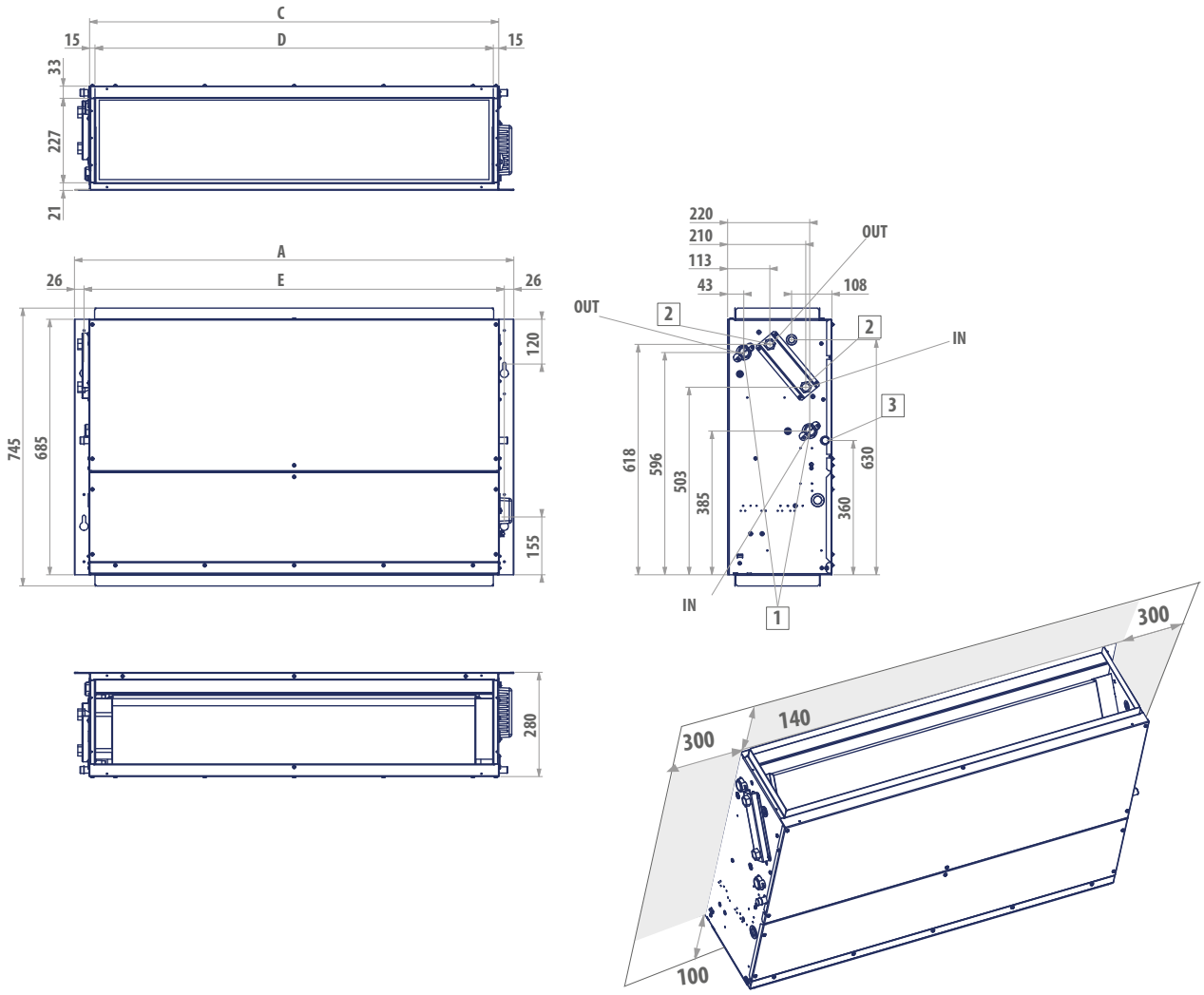

LEGEND

1 Standard heat exchanger water connections 3/4" female
2 Water connections additional heat exchanger 1/2" female
3 Condensate discharge diameter ø 17

FWB-C		10	11	15	17
A	mm	1177	1177	1177	1177
C	mm	1096	1096	1096	1096
D	mm	1066	1066	1066	1066
E	mm	1123	1123	1123	1123

All copying, even partial, of this manual is strictly forbidden

9 ELECTRICAL CONNECTIONS

Make the electrical connections with the power supply disconnected, in accordance with current safety regulations.
All the wiring must be done by qualified personnel.
For each thermal ventilating unit provide a main circuit breaker (IL), with opening contacts separated by at least 3 mm and an adequate protection fuse (F).
Electrical intakes are shown on the rating labels on the units.
During installation, strictly abide by the indications on the wiring diagram for the unit-control panel combination.
NOTE: The electric wires (power and control circuits) must be pulled in through the gland on the side of the electric box where the plumbing connections are located and then connected to the terminals.

⚠ **WARNING:** COMMON motor wire = WHITE, wrong connection may cause serious damages to the motor.

10 ELECTRICAL WIRES

Traced connection are on resposability of the installer

WARNING:
COMMON Motor wire = WHITE Wrong connection may cause serious damages to the motor

» FWB-C 04 Wiring diagram 6 speed

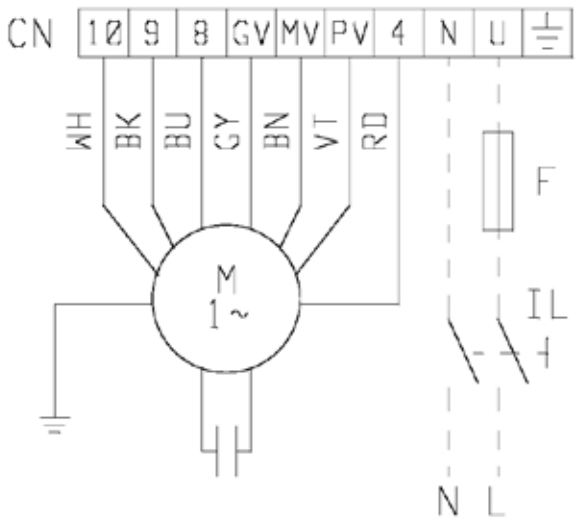

L	Phase	**BK**	Black = max speed
PE	Ground	**BU**	Blue
N	Neutral	**BN**	Brown
F	Fuse (not provided)	**GY**	Grey
IL	Circuit breaker (not supplied)	**GN**	Green
		YE	Yellow
.....	Wirings made by supplier	**RD**	Red=min speed
WH	White	**GYNE**	Yellow/green = ground (PE)

» FWB-C 05-06-08-10-11 Wiring diagram 7 speed

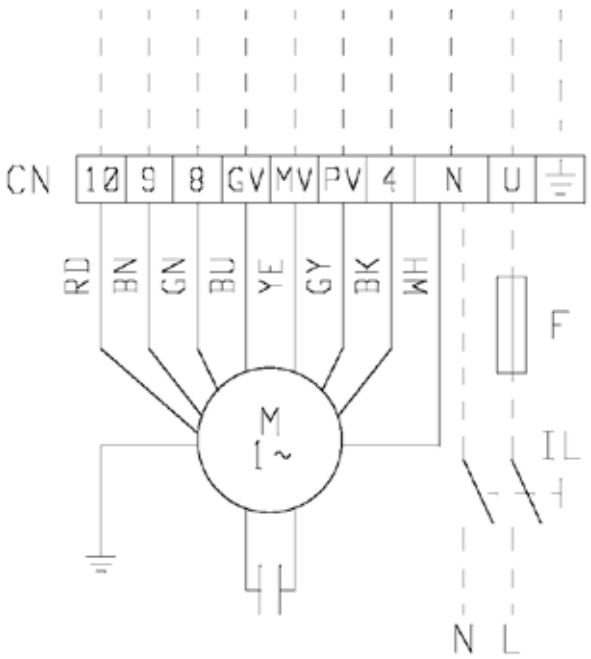

L	Phase	**BK**	Black = max speed
PE	Ground	**BU**	Blu = medium speed
N	Neutral	**BN**	Brown
F	Fuse (not provided)	**GY**	Grey
IL	Circuit breaker (not supplied)	**GN**	Green
		YE	Yellow
.....	Wirings made by supplier	**RD**	Red=min speed
WH	White	**GYNE**	Yellow/green = ground (PE)

All copying, even partial, of this manual is strictly forbidden

» FWB-C 15-17 Wiring diagram 4 speed

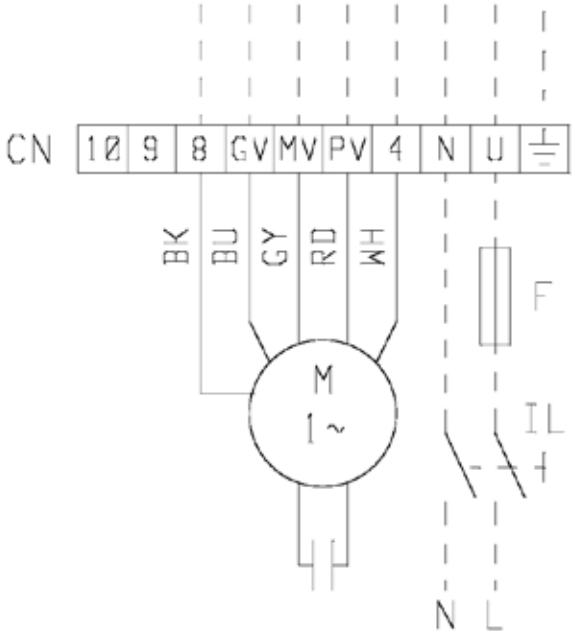

L	Phase	**BK**	Black = max speed
PE	Ground	**BU**	Blu = medium speed
N	Neutral	**BN**	Brown
F	Fuse (not provided)	**GY**	Grey
IL	Circuit breaker (not supplied)	**GN**	Green
.....	Wirings made by supplier	**YE**	Yellow
WH	White	**RD**	Red=min speed
		GYNE	Yellow/green = ground (PE)

» Electrical connection FWECS

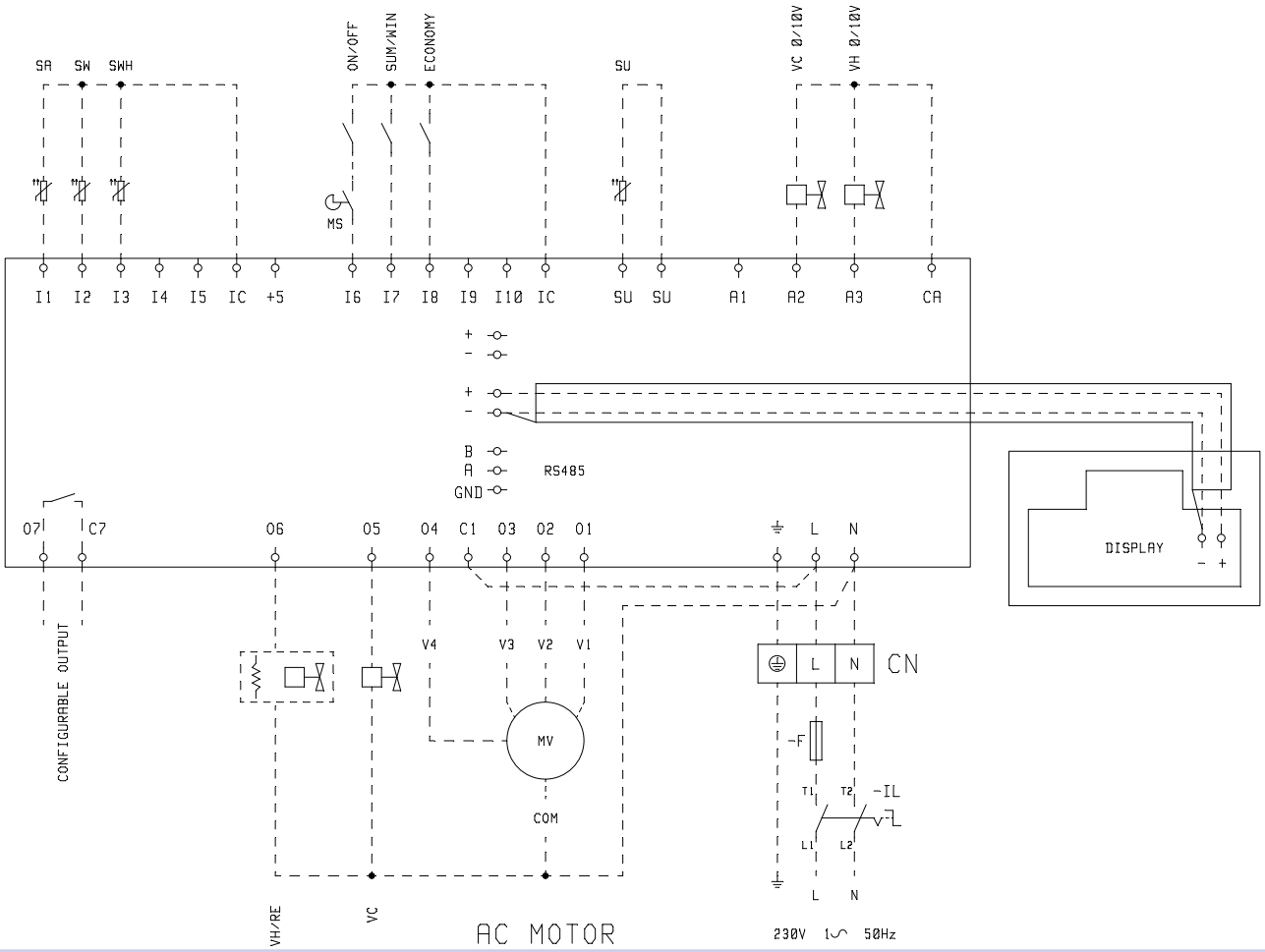

» Electrical connection FWB-C 04 FWEC1A + valve

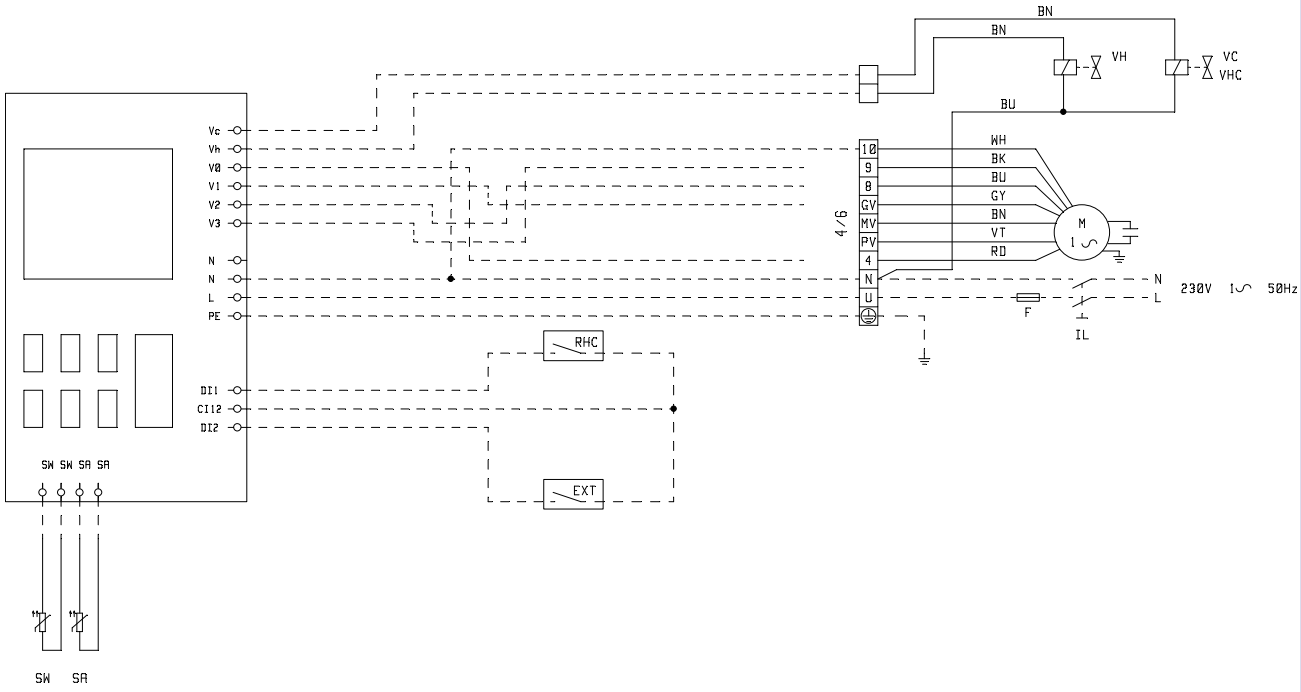

» Electrical connection FWB-C 05-11 FWEC1A + valve

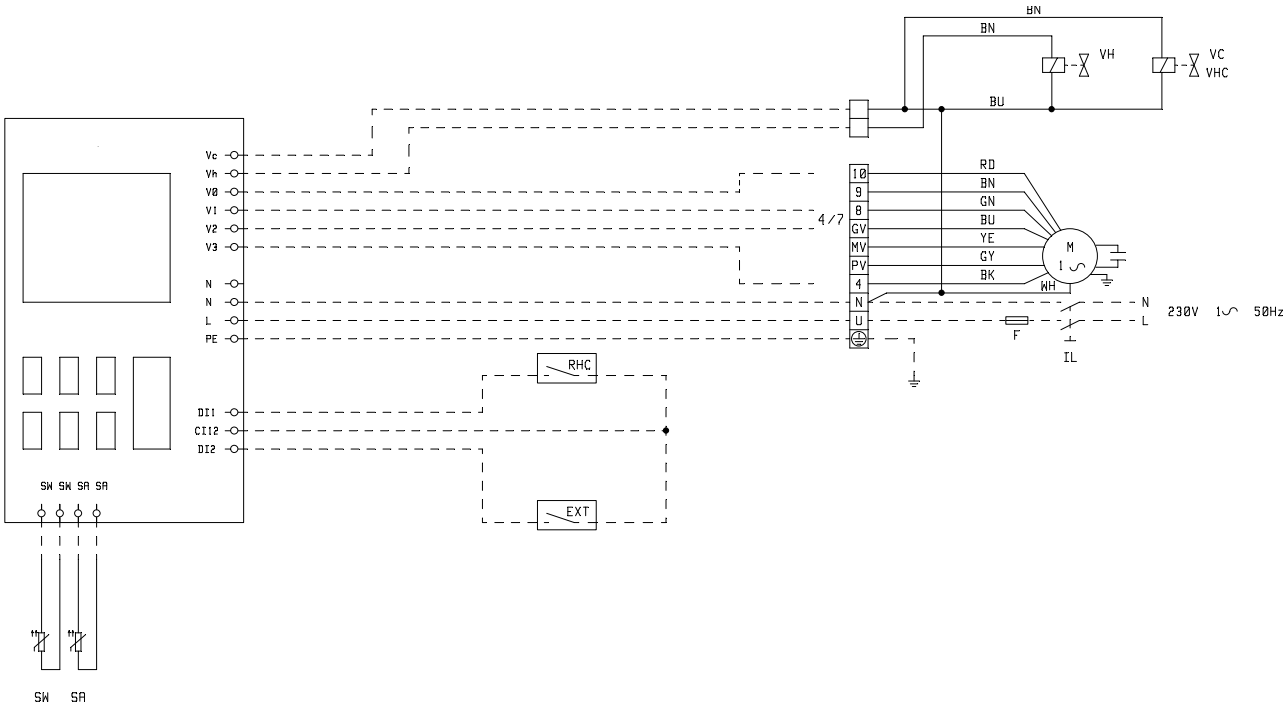

All copying, even partial, of this manual is strictly forbidden

» Electrical connection FWB-C 05-11 FWEC1A + valve

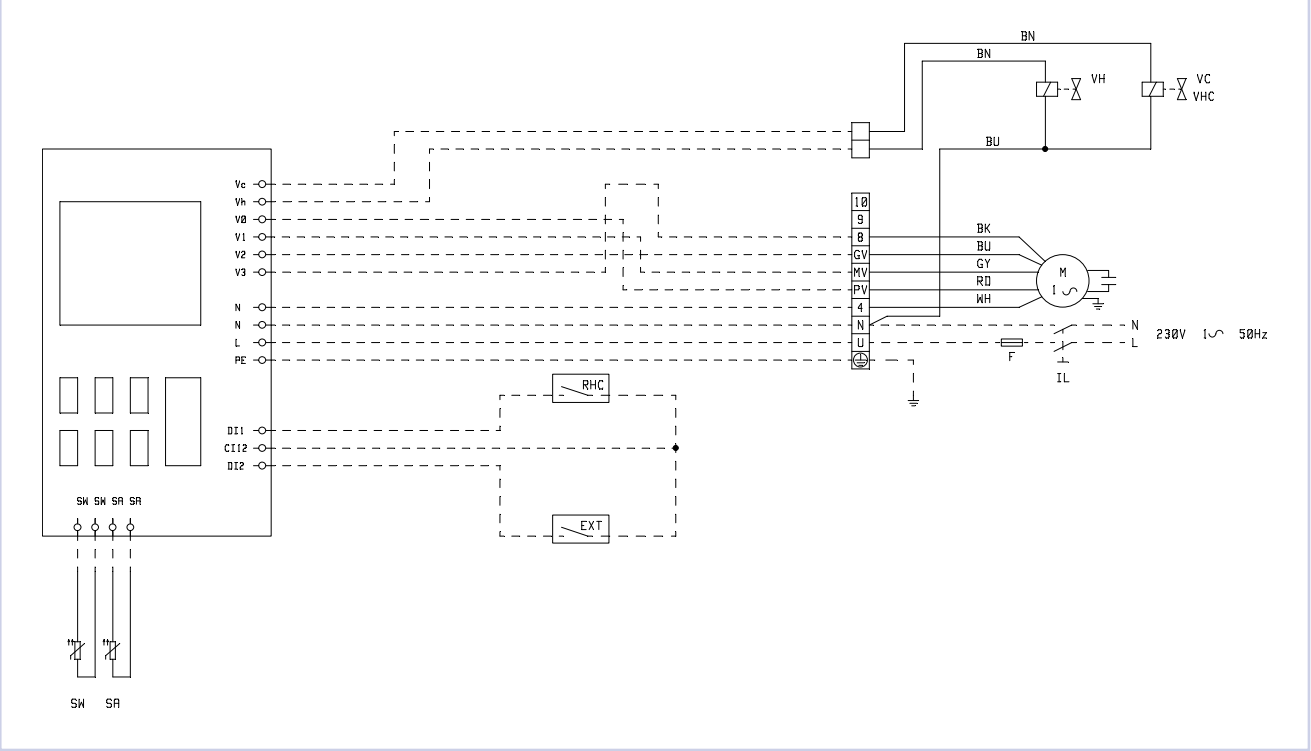

» Electrical connection FWB-C 04 FWEC2A/3A + valve

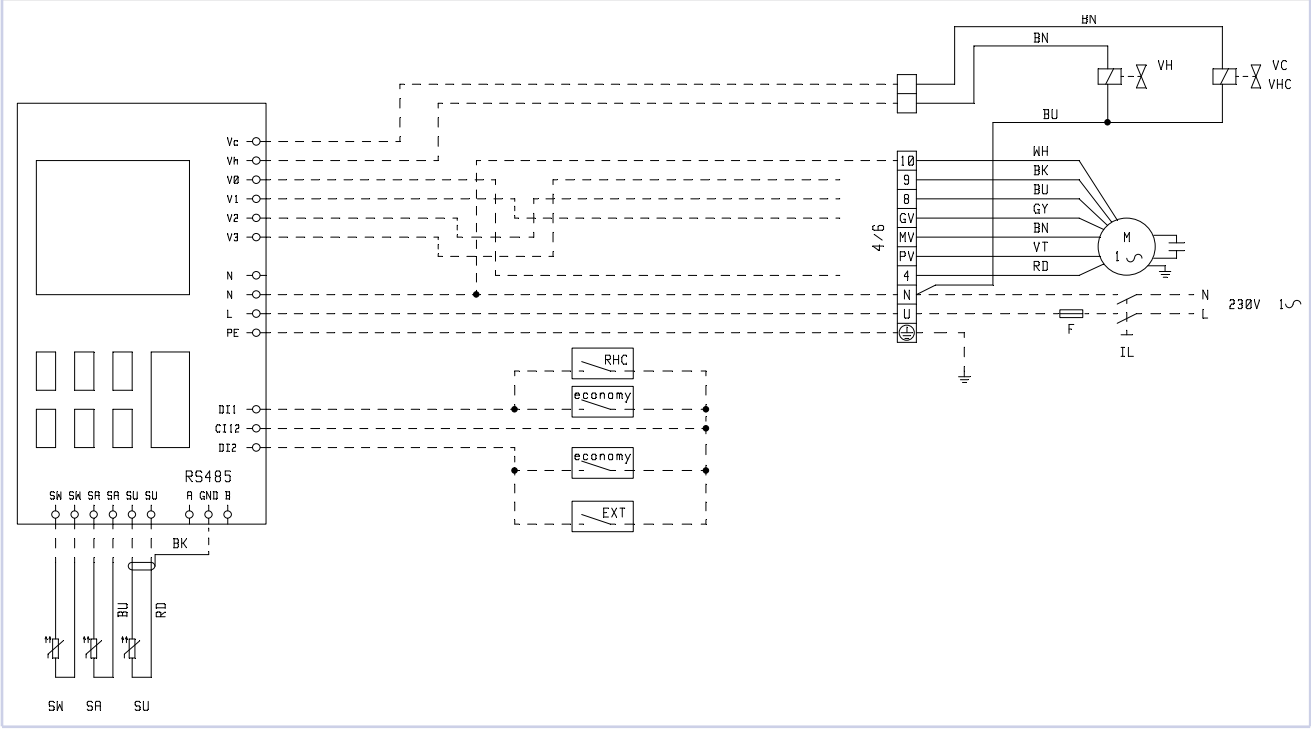

» Electrical connection FWB-C 05-11 FWEC2A/3A + valve

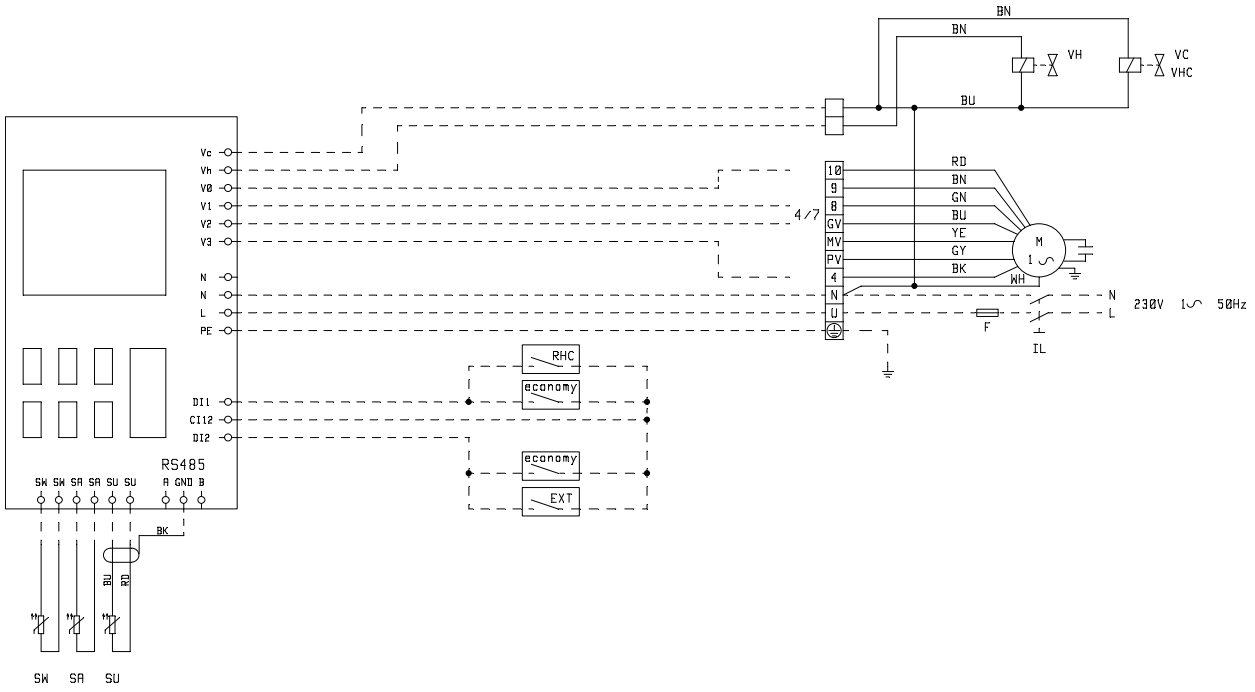

» Electrical connection FWB-C 15-17 FWEC2A/3A + valve

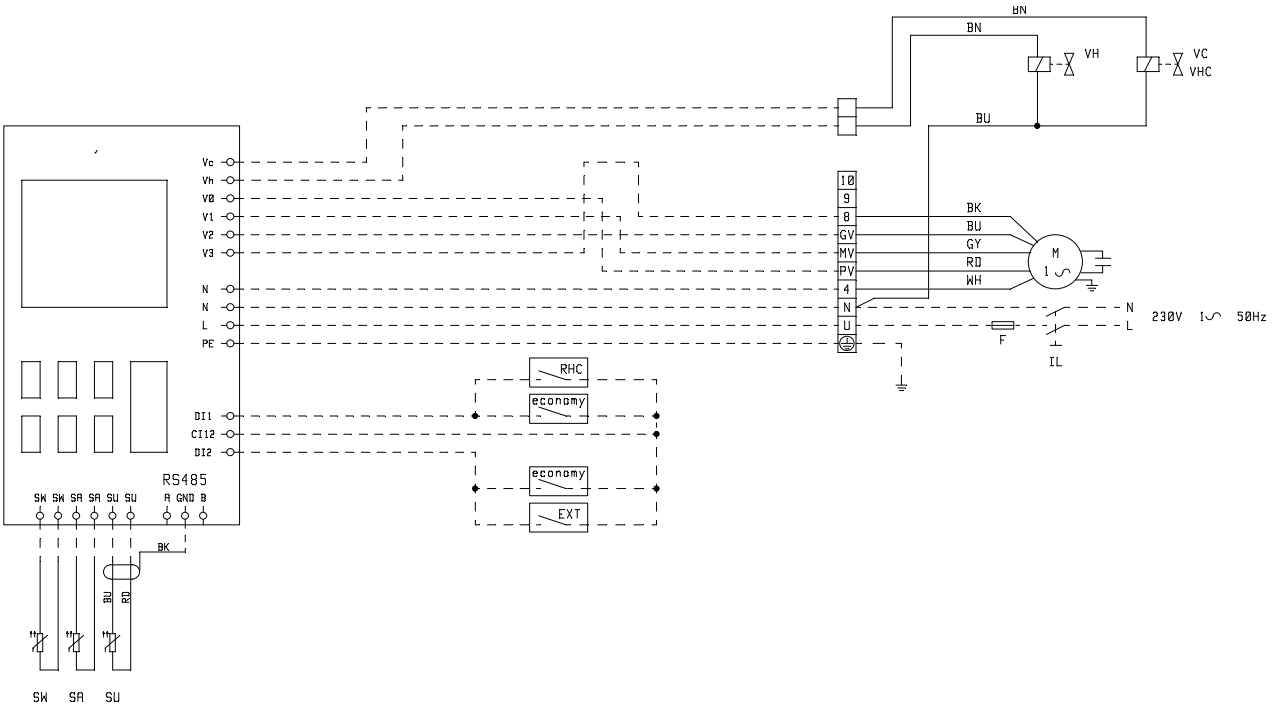

All copying, even partial, of this manual is strictly forbidden

» Electrical connection FWB-C 04 FWEC1A + valve + heating element

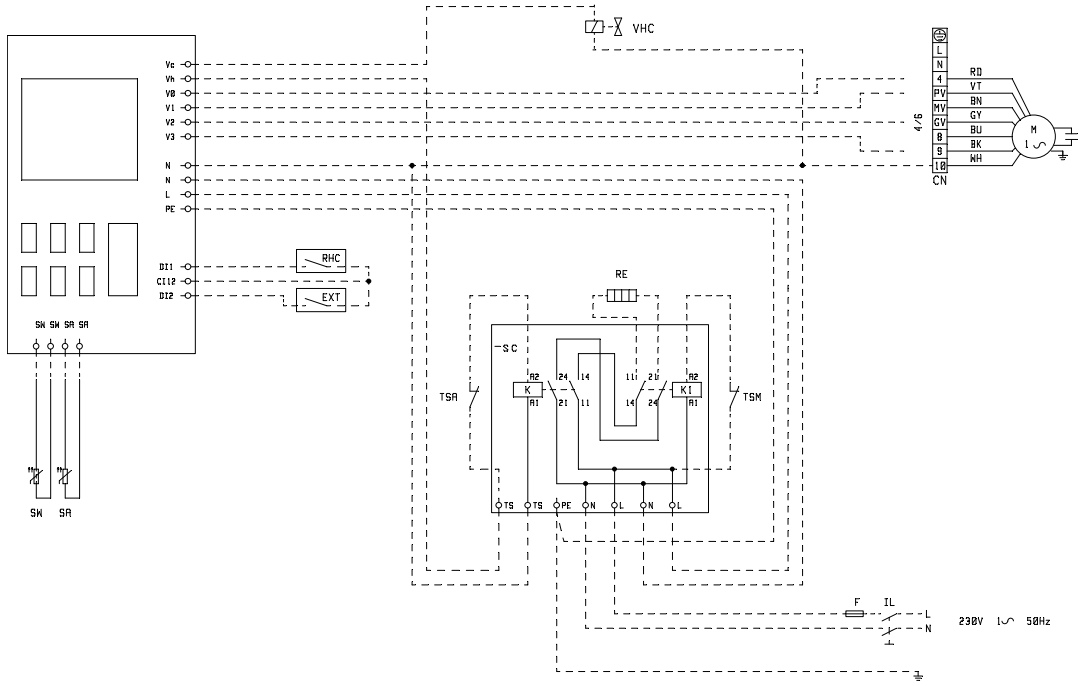

» Electrical connection FWB-C 05-11 FWEC1A + valve + heating element

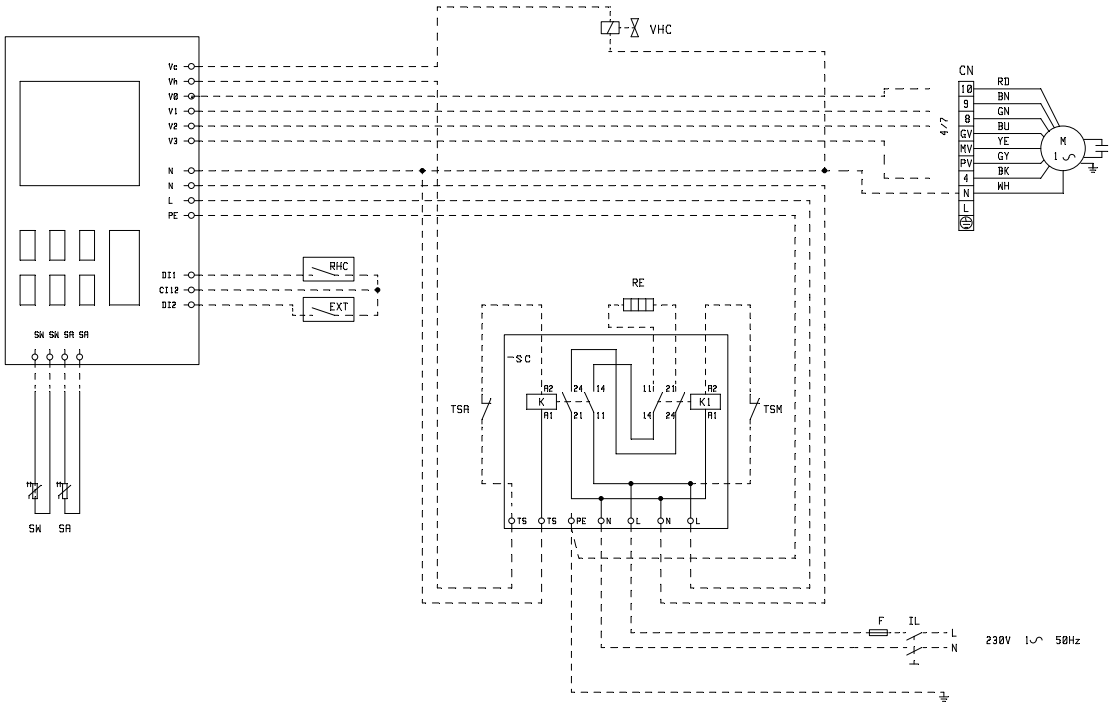

» Electrical connection FWB-C 15-17 FWEC1A + valve + heating element

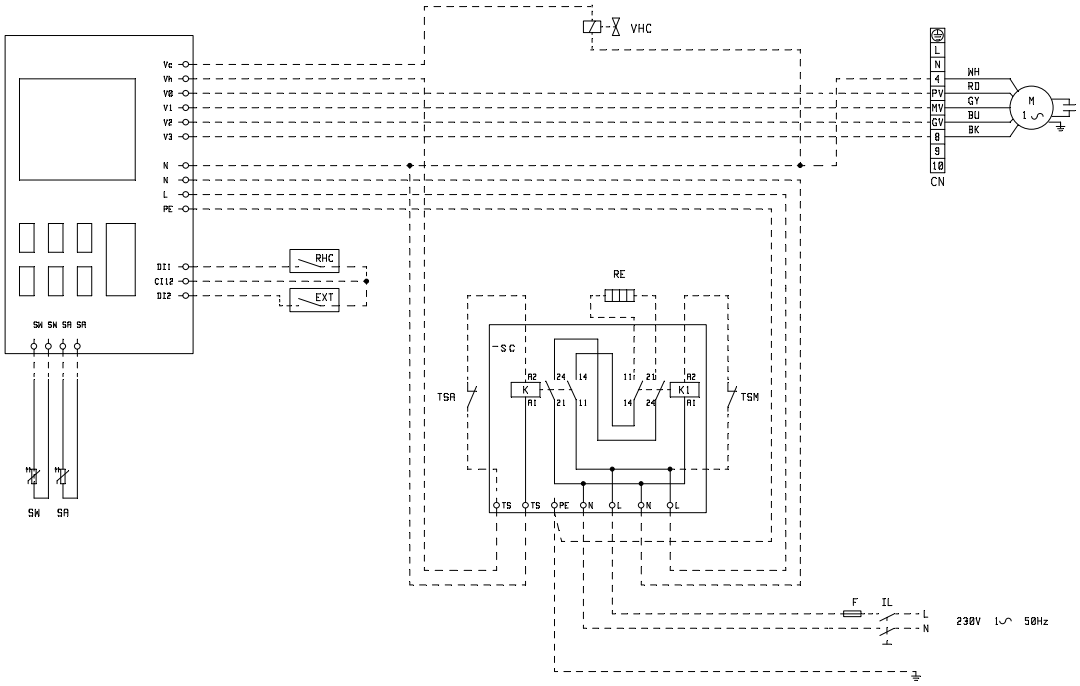

» Electrical connection FWB-C 04 FWEC2A/3A + valve + heating element

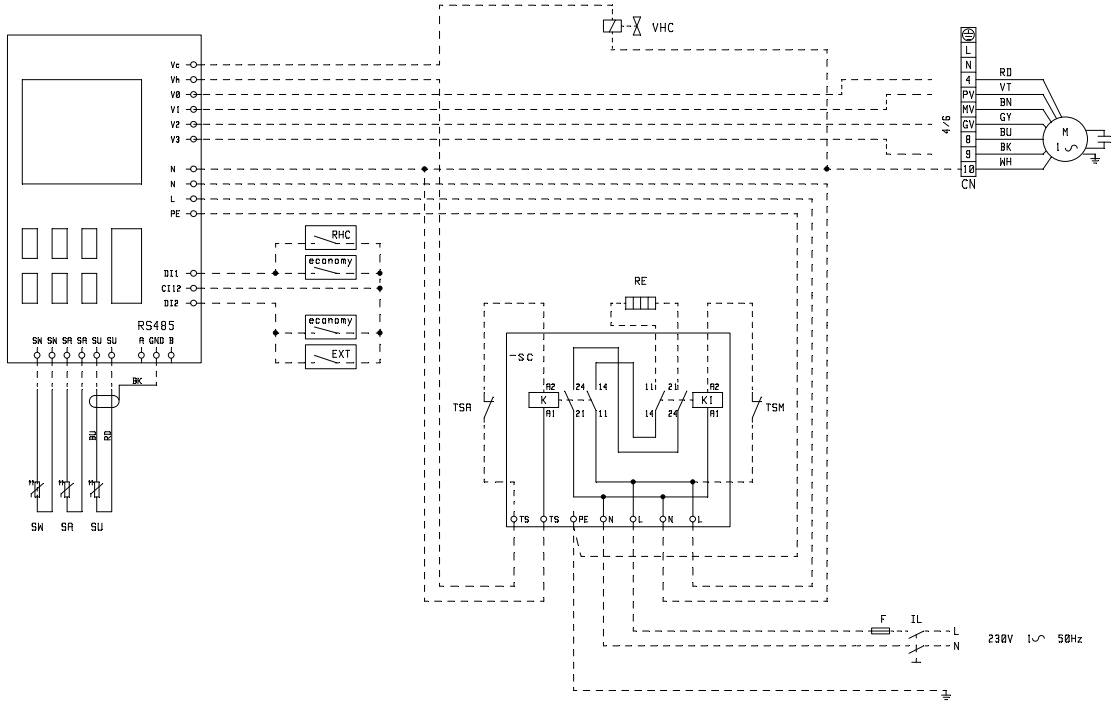

All copying, even partial, of this manual is strictly forbidden

» Electrical connection FWB-C 05-11 FWEC2A/3A + valve + heating element

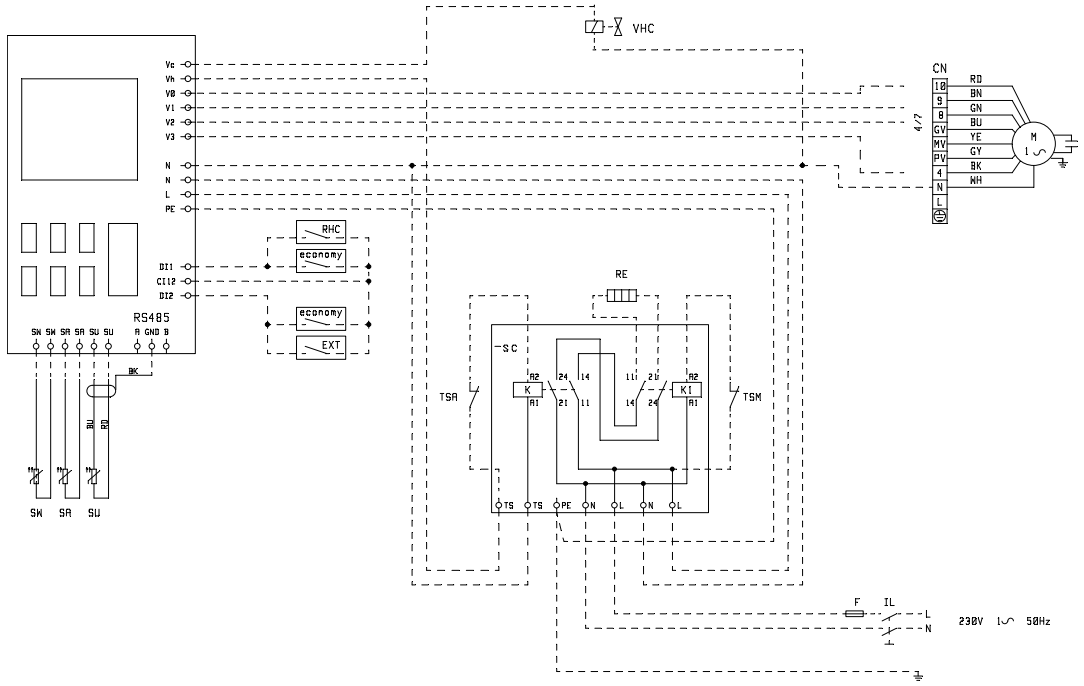

» Electrical connection FWB-C 15-17 FWEC2A/3A + valve + heating element

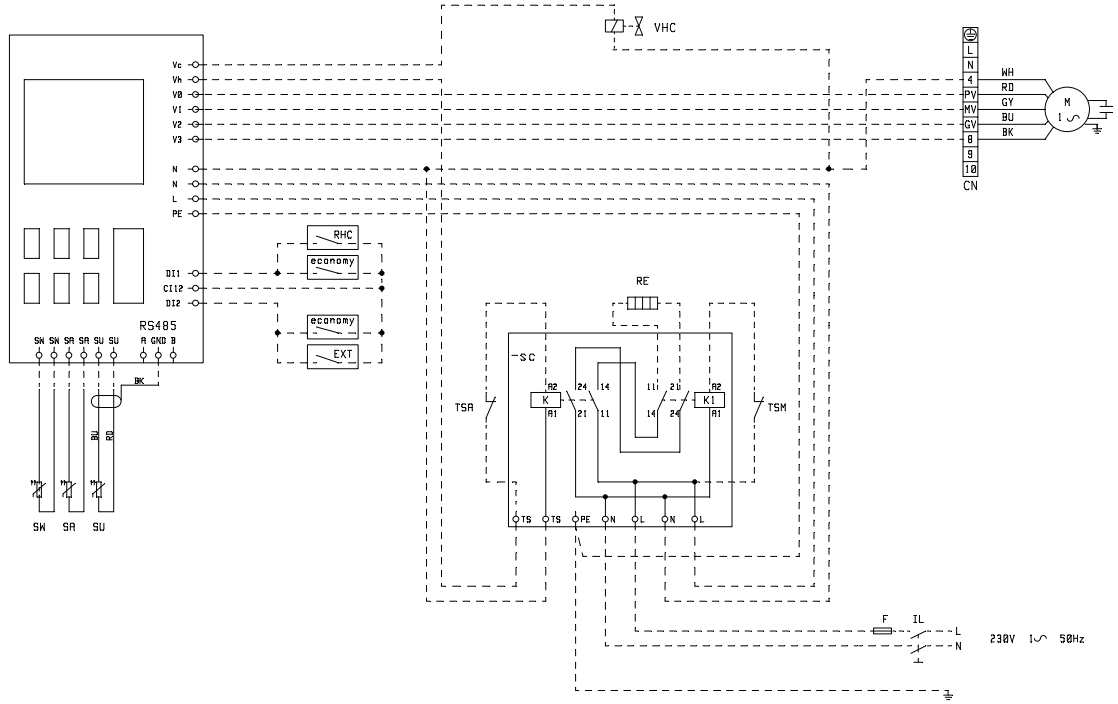

11 ACCESSORIES

FWEC1A wall-mounted microprocessor control
having the following main features:
- Room air temperature reading and adjustment
- Water temperature reading (water probe as an optional)
- Manual and automatic adjustment of fan speed
- Manual and automatic switching of heating and cooling mode depending on the water temperature within the heat exchanger or on the room temperature, with a neutral zone that can be selected in the range from 2° to 5°C.

The controller is equipped with a large display (3") to show and set all the functions of the unit.
Using the installation kit available FWEC1A can be mounted on the unit.

FWEC2A - wall-mounted microprocessor control
having the following main features:
- Room air temperature reading and adjustment
- Room humidity reading and adjustment
- Water temperature reading (water probe as an optional)
- Manual and automatic adjustment of fan speed
- Manual and automatic switching of heating and cooling mode depending on the water temperature within the heat exchanger or on the room temperature, with a neutral zone that can be selected in the range from 2° to 5°C.
- Serial port for Bus connection

The controller is equipped with a large display (3") to show and set all the functions of the unit.
Using the installation kit available, FWEC2A can be mounted on the unit.

FWEC3A- wall-mounted microprocessor control
having the following main features:
- Room air temperature reading and adjustment
- Room humidity reading and adjustment
- Water temperature reading (water probe as an optional)
- Manual and automatic adjustment of fan speed
- Manual and automatic switching of heating and cooling mode depending on the water temperature within the heat exchanger or on the room temperature, with a neutral zone that can be selected in the range from 2° to 5°C.
- Clock and hourly timer-programmed operation
- 2 Analogue outputs for controlling modulating evices -10V
- 2 Digital outputs for controlling (On/Off) external devices (novoltage contacts)
- Serial port for Bus connection

The controller is equipped with a large display (3") to show and set all the functions of the unit. Using the installation kit available, FWEC3A can be mounted on the unit.

FWECS - wall-mounted microprocessor split controller with display
FWECS controller is a system composed of:
- Circuit board comprising the power circuit, the microprocessor system and the removable screw connectors for the connection of the inlet and outlet devices;
- User interface comprising a graphic display and a keyboard (six keys) provided with clock and sensor to read the ambient temperature.

Main functions:
- Room air temperature reading and adjustment
- Room humidity reading and adjustment
- Water temperature reading (water sensor as an optional)
- Manual/automatic regulation of the fan speed with ON -OFF step and modulating control
- Automatic adjustment of valve opening with ON/OFF and modulating controller
- Manual and automatic switching of heating and cooling mode depending on the water temperature within the heat exchanger or on the room temperature, with a selectable neutral zone
- Clock and hourly timer-programmed operation
- 3 Analogue outputs for controlling modulating devices -10V
- Economy function and minimum temperature
- 1 Digital outputs for controlling (On/Off) external devices (novoltage contacts)
- Serial port for RS485 connection
- Serial port for OC connection
- 3 digital inputs for ON-OFF, Economy, Operating mode remote setting

Operating mode
The controller is provided with a programmable display that allows you to view and set the hydronic unit functions by means of the specific interface with parameter description.

FWTSKA - water temperature sensor for microprocessor controls model FWECS, FWEC1A/2A/3A
Directly connected to the microprocessor controllers FWECS and FWEC1A/2A/3A to measure the water temperature through the heat exchanger.
If the temperature registered is lower than 17 °C the unit works in cooling mode and the temperature range of the control panel will be referred to the cooling mode (19/31 °C); if the temperature registered is higher than 37 °C the unit works in heating mode and the temperature range of the control panel will be referred to the heating mode (14/26 °C). If the temperature registered is between 17 °C e 37 °C the control panel will disable the unit operation.

FWHSKA - Humidity sensor for FWECS, FWEC1A/2A/3A) microprocessor controller
Directly connected to the microprocessor controllers FWECS and FWEC1A/2A/3A, it enables the control of the heating element ventilation (if present, as support in heating mode) and the automatic cooling/heating changeover according to the water temperature.

All copying, even partial, of this manual is strictly forbidden

3 way motor driven valve with Hydraulic kit ON-OFF
It controls the room temperature by stopping the water flow through the heat exchanger. The kit, available for all models with standard heat exchanger or additional heat exchanger, comprises the following components: Valve body: 3-way with incorporated by-pass (4 connections), 230V single-phase electro-thermal normally closed ON/OFF servo control, it acts directly on the valve shutter. Hydraulic plumbing kit made with copper piping and brass connectors.

3-way motor-driven modulating valve complete with hydraulic kit
It controls the room temperature by stopping the water flow through the heat exchanger. The kit, available for all models with standard heat exchanger or additional heat exchanger, comprises the following components: Valve body: 3-way with incorporated by-pass (4 connections), 24V electro-thermal normally closed modulating servo control. It acts directly on the valve shutter. Hydraulic plumbing kit made with copper piping and brass connectors.

2-way motor-driven ON/OFF valve complete with hydraulic kit
It controls the room temperature by stopping the water flow through the heat exchanger. With 230V electro-thermal actuator. Available for all models, with standard heat exchanger or additional heat exchanger.

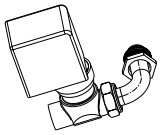

2-way motor-driven modulating valve complete with hydraulic kit
It controls the room temperature by stopping the water flow through the heat exchanger. With 24 V electro-thermal actuator. Available for all models, with standard heat exchanger or additional heat exchanger.

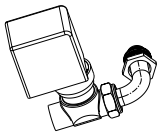

2-way motor-driven modulating valve pressure independent complete with hydraulic kit
It controls the room temperature by stopping the water flow through the heat exchanger. With 24 V electro-thermal actuator. Available for all models, with standard heat exchanger or additional heat exchanger.

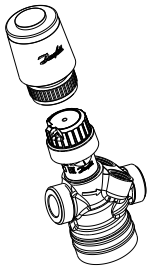

EDPD - Auxiliary trays for collecting condensate
Used for collecting any condensate that might form on the adjusting valves, the hydraulic unions and the holdfasts during the cooling operating mode.
The trays are made of galvanized metal sheet, with condensate discharge pipe (Ø 17 mm) setup for being connected to a flexible rubber tube, like that which has been envisaged for the condensate discharge trays of the basic unit. They are available for: FWB-C units installed horizontally, EDPD

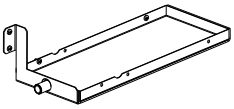

EH - additional electric heating element
Useful as heating integration to the hot water system, the EH kit is made of an electric heater with safety thermostat (automatic and manual resetting) and power relay.
The additional heating element should be coupled to the control panel. FWEC1A/2A/3A (the coupling to other controls is not allowed).

CDRP1A - Condensate drainage pump
This device allows to overcome displacements in the condensate drain. The pump can drain water up to 8 l/h and it is completed by a non return valve on the discharge side.

EPIMSB6 - Power interface for connecting in parallel up to 4 fan coil units to the one controller
The master slave can be installed to control with a single control panel up to 4 fan coils (connected in parallel). This accessory is designed for installation on a DIN drive, usually placed on electric board, can be matched with all versions.

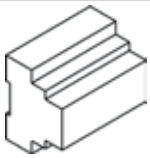

12 MAINTENANCE

For safety reasons, before carrying out any maintenance or cleaning jobs, turn off the unit by moving the fan speed selector to "Off" and putting off the main switch (0 position).

⚠ **DANGER!** Due caution must be taken while carrying out maintenance: some metal parts may cause injuries; wear protective gloves.

The maintenance requirements of FWB-C ducted units are limited to periodic cleaning of the air filter and heat exchanger and checks on the efficiency of condensate drainage.

Maintenance may be performed only by specialised personnel.

Whenever starting up the unit after it has not been used for a long time, check that there is no air in the heat exchanger.

The motor requires no maintenance since it has self-lubricating bearings.

12.1 CLEANING THE AIR FILTER

Disconnect the unit from the power supply by setting the main switch on 0 (OFF).

To clean the air filter proceed as follows:

1. Access the unit via the inspection panel and take out the air filter as shown in (Air filter):
2. If the filter is on the inside of the intake grille, remove the latter and then proceed to carry out the steps described below.
3. Clean the filter with warm water or, in the event of dry dust build-up, using compressed air.
4. Allow the filter to dry and then fit it back in place.

» Air filter

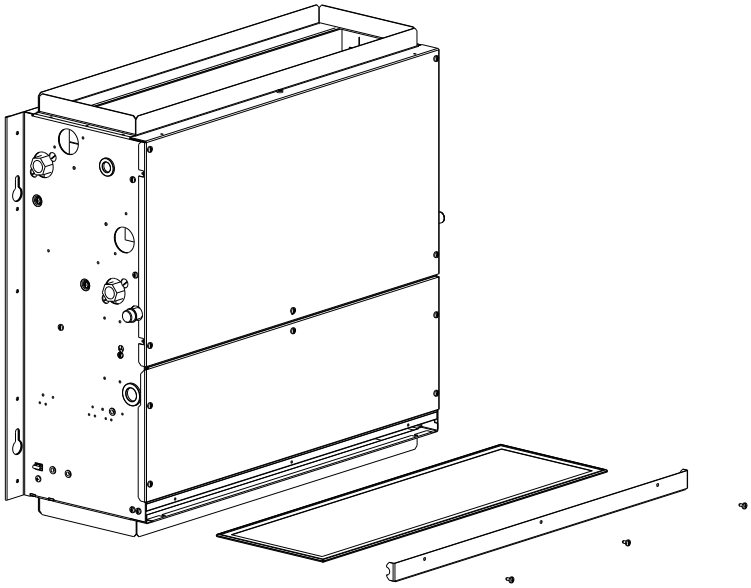

12.2 CLEANING THE HEAT EXCHANGER

It It is advisable to check the condition of the exchanger before the start of every summer season to make sure that the fins are not obstructed by dirt.

To access the heat exchanger, remove the outlet panel (whether of the type with collars or a rectangular flange) and the drip tray.

On reaching the exchanger, clean it with compressed air or low-pressure steam taking care not to damage the fins.

Before the start of every summer season, check the efficiency of condensate drainage.

Adequate periodic maintenance will ensure save both energy and cost savings.

All copying, even partial, of this manual is strictly forbidden

» Standard air intake

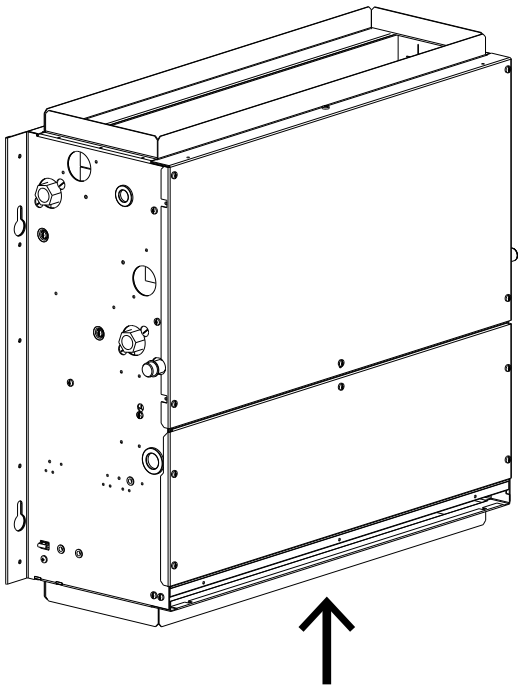

Zandvoordestraat 300, B-8400 Oostende,
Belgium