DAIKIN

INSTALLATION MANUAL

VRV System air conditioners

FXAQ15AUV1B
FXAQ20AUV1B
FXAQ25AUV1B
FXAQ32AUV1B
FXAQ40AUV1B
FXAQ50AUV1B
FXAQ63AUV1B

CE - DECLARATION-OF-CONFORMITY
CE - KONFORMITÄTSERKLÄRUNG
CE - DECLARATION-DE-CONFORMITE
CE - CONFORMITEITSVERKLARING
CE - DECLARACION-DE-CONFORMIDAD
CE - DICHIARAZIONE-DI-CONFORMITA
CE - ΔΗΛΩΣΗ ΣΥΜΜΟΡΦΩΣΗΣ
CE - DECLARAÇÃO-DE-CONFORMIDADE
CE - ЗАЯВЛЕНИЕ-О-СООТВЕТСТВИИ
CE - OVERENSSTEMMELSESERKLÆRING
CE - FÖRSÄKRAN-OM-ÖVERENSTÄMMELSE
CE - ERKLÆRING OM-SAMSVAR
CE - ILMOITUS-YHDENMUKAISUUDESTA
CE - PROHLÁŠENÍ-O-SHODĚ
CE - IZJAVA-O-USKLAĐENOSTI
CE - MEGFELELŐSÉGI-NYILATKOZAT
CE - DEKLARACJA-ZGODNOŚCI
CE - DECLARAŢIE-DE-CONFORMITATE
CE - IZJAVA O SKLADNOSTI
CE - VASTAVUSDEKLARATSIOON
CE - ДЕКЛАРАЦИЯ-ЗА-СЪОТВЕТСТВИЕ
CE - ATITIKTIES-DEKLARACIJA
CE - ATBILSTĪBAS-DEKLARĀCIJA
CE - VYHLÁSENIE-ZHODY
CE - UYGUNLUK-BEYANI

Daikin Europe N.V.

01 (GB) declares under its sole responsibility that the air conditioning models to which this declaration relates:
02 (D) erklärt auf seine alleinige Verantwortung daß die Modelle der Klimageräte für die diese Erklärung bestimmt ist:
03 (F) déclare sous sa seule responsabilité que les appareils d'air conditionné visés par la présente déclaration:
04 (NL) verklaart hierbij op eigen exclusieve verantwoordelijkheid dat de airconditioning units waarop deze verklaring betrekking heeft:
05 (E) declara baja su única responsabilidad que los modelos de aire acondicionado a los cuales hace referencia la declaración:
06 (I) dichiara sotto sua responsabilità che i condizionatori modello a cui è riferita questa dichiarazione:
07 (GR) δηλώνει με αποκλειστική της ευθύνη ότι τα μοντέλα των κλιματιστικών συσκευών στα οποία αναφέρεται η παρούσα δήλωση:
08 (P) declara sob sua exclusiva responsabilidade que os modelos de ar condicionado a que esta declaração se refere:
09 (RUS) заявляет, исключительно под свою ответственность, что модели кондиционеров воздуха, к которым относится настоящее заявление:
10 (DK) erklærer under eneansvar, at klimaanlægmodellerne, som denne deklaration vedrører:
11 (S) deklarerar i egenskap av huvudansvarig, att luftkonditioneringsmodellerna som berörs av denna deklaration innebär att:
12 (N) erklærer et fullstendig ansvar for at de luftkondisjoneringsmodeller som berøres av denne deklarasjon, innebærer at:
13 (FIN) ilmoittaa yksinomaan omalla vastuullaan, että tämän ilmoituksen tarkoittamat ilmastointilaitteiden mallit:
14 (CZ) prohlašuje ve své plné odpovědnosti, že modely klimatizace, k nimž se toto prohlášení vztahuje:
15 (HR) izjavljuje pod isključivo vlastitom odgovornošću da su modeli klima uređaja na koje se ova izjava odnosi:
16 (H) teljes felelőssége tudatában kijelenti, hogy a klímaberendezés modellek, melyekre e nyilatkozat vonatkozik:
17 (PL) deklaruje na własną i wyłączną odpowiedzialność, że modele klimatyzatorów, których dotyczy niniejsza deklaracja:
18 (RO) declară pe proprie răspundere că aparatele de aer condiţionat la care se referă această declaraţie:
19 (SLO) z vso odgovornostjo izjavlja, da so modeli klimatskih naprav, na katere se izjava nanaša:
20 (EST) kinnitab oma täielikul vastutusel, et käesoleva deklaratsiooni alla kuuluvad kliimaseadmete mudelid:
21 (BG) декларира на своя отговорност, че моделите климатична инсталация, за които се отнася тази декларация:
22 (LT) visiška savo atsakomybe skelbia, kad oro kondicionavimo prietaisų modeliai, kuriems yra taikoma ši deklaracija:
23 (LV) ar pilnu atbildību apliecina, ka tālāk uzskaitīto modeļu gaisa kondicionētāji, uz kuriem attiecas šī deklarācija:
24 (SK) vyhlasuje na vlastnú zodpovednosť, že tieto klimatizačné modely, na ktoré sa vzťahuje toto vyhlásenie:
25 (TR) tamamen kendi sorumluluğunda olmak üzere bu bildirinin ilgili olduğu klima modellerinin aşağıdaki gibi olduğunu beyan eder:

FXAQ15AUV1B, FXAQ20AUV1B, FXAQ25AUV1B, FXAQ32AUV1B, FXAQ40AUV1B, FXAQ50AUV1B, FXAQ63AUV1B,

01 are in conformity with the following standard(s) or other normative document(s), provided that these are used in accordance with our instructions:
02 der/den folgenden Norm(en) oder einem anderen Normdokument oder -dokumenten entspricht/entsprechen, unter der Voraussetzung, daß sie gemäß unseren Anweisungen eingesetzt werden:
03 sont conformes à la/aux norme(s) ou autre(s) document(s) normatif(s), pour autant qu'ils soient utilisés conformément à nos instructions:
04 conform de volgende norm(en) of één of meer andere bindende documenten zijn, op voorwaarde dat ze worden gebruikt overeenkomstig onze instructies:
05 están en conformidad con la(s) siguiente(s) norma(s) u otro(s) documento(s) normativo(s), siempre que sean utilizados de acuerdo con nuestras instrucciones:
06 sono conformi al(i) seguente(i) standard(s) o altro(i) documento(i) a carattere normativo, a patto che vengano usati in conformità alle nostre istruzioni:
07 είναι σύμφωνα με το(α) ακόλουθο(α) πρότυπο(α) ή άλλο έγγραφο(α) κανονισμών, υπό την προϋπόθεση ότι χρησιμοποιούνται σύμφωνα με τις οδηγίες μας:
08 estão em conformidade com a(s) seguinte(s) norma(s) ou outro(s) documento(s) normativo(s), desde que estes sejam utilizados de acordo com as nossas instruções:
09 соответствуют следующим стандартам или другим нормативным документам, при условии их использования согласно нашим инструкциям:
10 overholder følgende standard(er) eller andet/andre retningsgivende dokument(er), forudsat at disse anvendes i henhold til vore instrukser:
11 respektive utrustning är utförd i överensstämmelse med och följer följande standard(er) eller andra normgivande dokument, under förutsättning att användning sker i överensstämmelse med våra instruktioner:
12 respektive utstyr er i overensstemmelse med følgende standard(er) eller andre normgivende dokument(er), under forutssetning av at disse brukes i henhold til våre instrukser:
13 vastaavat seuraavien standardien ja muiden ohjeellisten dokumenttien vaatimuksia edellyttäen, että niitä käytetään ohjeidemme mukaisesti:
14 za předpokladu, že jsou využívány v souladu s našimi pokyny, odpovídají následujícím normám nebo normativním dokumentům:
15 u skladu sa slijedećim standardom(ima) ili drugim normativnim dokumentom(ima), uz uvjet da se oni koriste u skladu s našim uputama:
16 megfelelnek az alábbi szabvány(ok)nak vagy egyéb irányadó dokumentum(ok)nak, ha azokat előírás szerint használják:
17 spełniają wymogi następujących norm i innych dokumentów normalizacyjnych, pod warunkiem że używane są zgodnie z naszymi instrukcjami:
18 sunt în conformitate cu următorul (următoarele) standard(e) sau alt(e) document(e) normativ(e), cu condiţia ca acestea să fie utilizate în conformitate cu instrucţiunile noastre:
19 skladni z naslednjimi standardi in drugimi normativi, pod pogojem, da se uporabljajo v skladu z našimi navodili:
20 on vastavuses järgmis(t)e standardi(te)ga või teiste normatiivsete dokumentidega, kui neid kasutatakse vastavalt meie juhenditele:
21 съответстват на следните стандарти или други нормативни документи, при условие, че се използват съгласно нашите инструкции:
22 atitinka žemiau nurodytus standartus ir (arba) kitus norminius dokumentus su sąlyga, kad yra naudojami pagal mūsų nurodymus:
23 tad, ja lietoti atbilstoši ražotāja norādījumiem, atbilst sekojošiem standartiem un citiem normatīviem dokumentiem:
24 sú v zhode s nasledovnou(ými) normou(ami) alebo iným(i) normatívnym(i) dokumentom(ami), za predpokladu, že sa používajú v súlade s našim návodom:
25 ürününün, talimatlarımıza göre kullanılması koşuluyla aşağıdaki standartlar ve norm belirten belgelerle uyumludur:

EN60335-2-40,

01 following the provisions of:
02 gemäß den Vorschriften der:
03 conformément aux stipulations des:
04 overeenkomstig de bepalingen van:
05 siguiendo las disposiciones de:
06 secondo le prescrizioni per:
07 με τήρηση των διατάξεων των:
08 de acordo com o previsto em:
09 в соответствии с положениями:
10 under iagttagelse af bestemmelserne i:
11 enligt villkoren i:
12 gitt i henhold til bestemmelsene i:
13 noudattaen määräyksiä:
14 za dodržení ustanovení předpisu:
15 prema odredbama:
16 követi a(z):
17 zgodnie z postanowieniami Dyrektyw:
18 în urma prevederilor:
19 ob upoštevanju določb:
20 vastavalt nõuetele:
21 следвайки клаузите на:
22 laikantis nuostatų, pateikiamų:
23 ievērojot prasības, kas noteiktas:
24 dodržiavajúc ustanovenia:
25 bunun koşullarına uygun olarak:

Machinery 2006/42/EC **
Electromagnetic Compatibility 2014/30/EU *

01 Directives, as amended.
02 Direktiven, gemäß Änderung.
03 Directives, telles que modifiées.
04 Richtlijnen, zoals geamendeerd.
05 Directivas, según lo enmendado.
06 Direttive, come da modifica.
07 Οδηγιών, όπως έχουν τροποποιηθεί.
08 Directivas, conforme alteração em.
09 Директив со всеми поправками.
10 Direktiver, med senere ændringer.
11 Direktiv, med företagna ändringar.
12 Direktiver, med foretatte endringer.
13 Direktiivejä, sellaisina kuin ne ovat muutettuina.
14 v platném znění.
15 Smjernice, kako je izmijenjeno.
16 irányelv(ek) és módosításaik rendelkezéseit.
17 z późniejszymi poprawkami.
18 Directivelor, cu amendamentele respective.
19 Direktive z vsemi spremembami.
20 Direktiivid koos muudatustega.
21 Директиви, с техните изменения.
22 Direktyvose su papildymais.
23 Direktīvās un to papildinājumos.
24 Smernice, v platnom znení.
25 Değiştirilmiş halleriyle Yönetmelikler.

01 **Note** * as set out in **<A>** and judged positively by **<B>** according to the **Certificate <C>**.
02 **Hinweis** * wie in **<A>** aufgeführt und von **<B>** positiv beurteilt gemäß **Zertifikat <C>**.
03 **Remarque** * tel que défini dans **<A>** et évalué positivement par **<B>** conformément au **Certificat <C>**.
04 **Bemerk** * zoals vermeld in **<A>** en positief beoordeeld door **<B>** overeenkomstig **Certificaat <C>**.
05 **Nota** * como se establece en **<A>** y es valorado positivamente por **<B>** de acuerdo con el **Certificado <C>**.
06 **Nota** * delineato nel **<A>** e giudicato positivamente da **<B>** secondo il **Certificato <C>**.
07 **Σημείωση** * όπως καθορίζεται στο **<A>** και κρίνεται θετικά από το **<B>** σύμφωνα με το **Πιστοποιητικό <C>**.
08 **Nota** * tal como estabelecido em **<A>** e com o parecer positivo de **<B>** de acordo com o **Certificado <C>**.
09 **Примечание** * как указано в **<A>** и в соответствии с положительным решением **<B>** согласно **Свидетельству <C>**.
10 **Bemærk** * som anført i **<A>** og positivt vurderet af **<B>** i henhold til **Certifikat <C>**.
11 **Information** * enligt **<A>** och godkänts av **<B>** enligt **Certifikatet <C>**.
12 **Merk** * som det fremkommer i **<A>** og gjennom positiv bedømmelse av **<B>** ifølge **Sertifikat <C>**.
13 **Huom** * jotka on esitetty asiakirjassa **<A>** ja jotka **<B>** on hyväksynyt **Sertifikaatin <C>** mukaisesti.
14 **Poznámka** * jak bylo uvedeno v **<A>** a pozitivně zjištěno **<B>** v souladu s **osvědčením <C>**.
15 **Napomena** * kako je izloženo u **<A>** i pozitivno ocijenjeno od strane **<B>** prema **Certifikatu <C>**.
16 **Megjegyzés** * a(z) **<A>** alapján, a(z) **<B>** igazolta a megfelelést, a(z) **<C>** **tanúsítvány** szerint.
17 **Uwaga** * zgodnie z dokumentacją **<A>**, pozytywną opinią **<B>** i **Świadectwem <C>**.
18 **Notă** * aşa cum este stabilit în **<A>** şi apreciat pozitiv de **<B>** în conformitate cu **Certificatul <C>**.
19 **Opomba** * kot je določeno v **<A>** in odobreno s strani **<B>** v skladu s **certifikatom <C>**.
20 **Märkus** * nagu on näidatud dokumendis **<A>** ja heaks kiidetud **<B>** järgi vastavalt **sertifikaadile <C>**.
21 **Забележка** * както е изложено в **<A>** и оценено положително от **<B>** съгласно **Сертификата <C>**.
22 **Pastaba** * kaip nustatyta **<A>** ir kaip teigiamai nuspręsta **<B>** pagal **Sertifikatą <C>**.
23 **Piezīmes** * kā norādīts **<A>** un atbilstoši **<B>** pozitīvajam vērtējumam saskaņā ar **sertifikātu <C>**.
24 **Poznámka** * ako bolo uvedené v **<A>** a pozitívne zistené **<B>** v súlade s **osvedčením <C>**.
25 **Not** * **<A>**'da belirtildiği gibi ve **<C>** **Sertifikasına** göre **<B>** tarafından olumlu olarak değerlendirildiği gibi.

<A>	**DAIKIN.TCF.024H1**
<B>	**TUV (NB1856)**
<C>	**0510260101**

01 ** Daikin Europe N.V. is authorised to compile the Technical Construction File.
02 ** Daikin Europe N.V. hat die Berechtigung die Technische Konstruktionsakte zusammenzustellen.
03 ** Daikin Europe N.V. est autorisé à compiler le Dossier de Construction Technique.
04 ** Daikin Europe N.V. is bevoegd om het Technisch Constructiedossier samen te stellen.
05 ** Daikin Europe N.V. está autorizado a compilar el Archivo de Construcción Técnica.
06 ** Daikin Europe N.V. è autorizzata a redigere il File Tecnico di Costruzione.
07 ** Η Daikin Europe N.V. είναι εξουσιοδοτημένη να συντάξει τον Τεχνικό φάκελο κατασκευής.
08 ** A Daikin Europe N.V. está autorizada a compilar a documentação técnica de fabrico.
09 ** Компания Daikin Europe N.V. уполномочена составить Комплект технической документации.
10 ** Daikin Europe N.V. er autoriseret til at udarbejde de tekniske konstruktionsdata.
11 ** Daikin Europe N.V. är bemyndigade att sammanställa den tekniska konstruktionsfilen.
12 ** Daikin Europe N.V. har tillatelse til å kompilere den Tekniske konstruksjonsfilen.
13 ** Daikin Europe N.V. on valtuutettu laatimaan Teknisen asiakirjan.
14 ** Společnost Daikin Europe N.V. má oprávnění ke kompilaci souboru technické konstrukce.
15 ** Daikin Europe N.V. je ovlašten za izradu Datoteke o tehničkoj konstrukciji.
16 ** A Daikin Europe N.V. jogosult a műszaki konstrukciós dokumentáció összeállítására.
17 ** Daikin Europe N.V. ma upoważnienie do zbierania i opracowywania dokumentacji konstrukcyjnej.
18 ** Daikin Europe N.V. este autorizat să compileze Dosarul tehnic de construcţie.
19 ** Daikin Europe N.V. je pooblaščen za sestavo datoteke s tehnično mapo.
20 ** Daikin Europe N.V. on volitatud koostama tehnilist dokumentatsiooni.
21 ** Daikin Europe N.V. е оторизирана да състави Акта за техническа конструкция.
22 ** Daikin Europe N.V. yra įgaliota sudaryti šį techninės konstrukcijos failą.
23 ** Daikin Europe N.V. ir autorizēts sastādīt tehnisko dokumentāciju.
24 ** Spoločnosť Daikin Europe N.V. je oprávnená vytvoriť súbor technickej konštrukcie.
25 ** Daikin Europe N.V. Teknik Yapı Dosyasını derlemeye yetkilidir.

3P494114-1A

DAIKIN

Shigeki Morita
Director
Ostend, 1st of November 2017

DAIKIN EUROPE N.V.
Zandvoordestraat 300, B-8400 Oostende, Belgium

CONTENTS

1. SAFETY PRECAUTIONS....1
2. BEFORE INSTALLATION....3
3. SELECTING INSTALLATION SITE....5
4. INDOOR UNIT INSTALLATION....6
5. REFRIGERANT PIPING WORK....10
6. DRAIN PIPING WORK....12
7. ELECTRIC WIRING WORK....13
8. HOW TO CONNECT WIRINGS AND WIRING EXAMPLE....15
9. FIELD SETTINGS....21
10. TEST OPERATION....22
11. WIRING DIAGRAM....23

This English text is the original instruction. Other languages are translations of the original instructions.

1. SAFETY PRECAUTIONS

Please read these “SAFETY PRECAUTIONS” carefully before installing air conditioning equipment and be sure to install it correctly.

Meaning of WARNING and CAUTION notices.
Both are important notices for safety. Be sure to follow them.

⚠ **WARNING** .....Failure to follow these instructions properly may result in personal injury or loss of life.

⚠ **CAUTION** .....Failure to observe these instructions properly may result in property damage or personal injury, which may be serious depending on the circumstances.

After completing installation, conduct a test run to confirm that the equipment operates without any problems. Then, explain to the customer how to operate the equipment and take care of it following the operation manual. Ask the customer to store the installation manual along with the operation manual for future reference.

⚠ **WARNING**

- Ask your dealer or qualified personnel to carry out installation work.
  Do not attempt to install the air conditioner yourself. Improper installation may result in water leakage, electric shocks or fire.
- Install the air conditioner in accordance with the instructions in this installation manual.
  Improper installation may result in water leakage, electric shocks or fire.
- When installing the unit in a small room, take measures so that the refrigerant may not exceed the limiting concentration in the event of refrigerant leakage.
  Contact your dealer for further information. If the refrigerant leaks and exceeds the limiting concentration, it may lead to oxygen deficiency.
- Be sure to use only the specified accessories and parts for installation work.
  Failure to use the specified parts may result in the unit falling, water leakage, electric shocks or fire.

- Install the air conditioner on a foundation strong enough to withstand the weight of the unit.
  If a foundation does not have sufficient strength, the equipment may fall and cause injury.
- The electrical work must be carried out by the qualified electrician in accordance with the local laws and regulations and this installation manual. Make sure to provide a dedicated power supply circuit and never connect additional wiring to the existing circuit.
  An insufficient power supply capacity or improper electrical work may lead to electric shocks or fire.
- Be sure to earth the air conditioner.
  Do not earth the unit to a utility pipe, lightning conductor or telephone earth lead.
  Imperfect earthing may result in electric shocks or fire.
  A high surge current from lightning or other sources may cause damage to the air conditioner.
- Be sure to install an earth leakage breaker.
  Failure to install an earth leakage breaker may result in electric shocks or fire.
- Be sure to switch off the unit before touching any electrical parts.
  Touching a live part may result in electric shock.
- For wiring, use the specified wires and connect and fasten them firmly so that no external force from the wires may be applied to the terminal connections.
  If the wires are not firmly connected and fastened, it may cause heating, fire or the like.
- Wiring for power supply and between the indoor and outdoor units must be properly laid and formed, and the control box cover must be firmly fastened so that the wiring may not push up the structural parts such as the cover.
  If the cover is improperly fastened, it may cause electric shock or fire.
- If refrigerant gas leaks during installation, ventilate the area immediately.
  Toxic gas may be produced if the refrigerant comes into contact with fire.
- After completing installation, check for refrigerant gas leakage.
  Toxic gas may be produced if the refrigerant gas leaks into the room and comes into contact with a source of fire, such as a fan heater, stove or cooker.
- Do not directly touch refrigerant that has leaked from refrigerant pipes or other areas, as there is a danger of frostbite.
- If the supply cord is damaged, it must be replaced by the manufacturer, a service agent or similarly qualified persons in order to avoid a hazard.

⚠ CAUTION

- Carry out drain piping properly following this installation manual and insulate the pipe to prevent condensation.
  Improper drain piping may result in indoor water leakage and property damage.
- Install the indoor and outdoor units, power cord and connecting wires at least 1 meter away from televisions or radios to prevent picture interference and noise.
  (Depending on the incoming signal strength, a distance of 1 meter may not be sufficient to eliminate noise.)
- Install the indoor unit as far as possible from fluorescent lamps.
  If a wireless kit is installed in a room where the electronic lighting type (inverter or rapid start types) fluorescent lamps exist, the transmitting distance of a remote controller may be shorter.
- Do not install the air conditioner in the following locations:
  1. Where there is a high concentration of mineral oil spray or vapour (e.g. a kitchen).
     Plastic parts may deteriorate and cause parts to fall off or water to leak.
  2. Where corrosive gas, such as sulphurous acid gas, is produced.
     Corrosion of copper pipes or brazed parts may occur and cause refrigerant leakage.
  3. Where there is a machine that generates electromagnetic wave and where voltage fluctuation often occurs such as a factory.
     Control system may malfunction and as a result the unit may not properly operate.
  4. Where flammable gas may leak, where carbon fibre or ignitable dust is suspending in the air, or where volatile flammables such as paint thinner or gasoline are handled.
     Operating the unit in such conditions may result in fire.
- The air conditioner is not intended for use in a potentially explosive atmosphere.
- Sound pressure level is less than 70 dB(A).

2. BEFORE INSTALLATION

Do not exert pressure on the resin parts when opening the unit or when moving it after opening.
Be sure to check the type of R410A refrigerant to be used before doing any work. (Using an incorrect refrigerant will prevent normal operation of the unit.)

- When opening the unit or moving it after opening, be sure to lift it by holding on to the lifting lugs without exerting any pressure on other parts, especially, drain piping, and other resin parts.
- Decide upon a line of transport.
- Leave the unit inside its packaging while moving, until reaching the installation site. Use a sling of soft material, where unpacking is unavoidable or protective plates together with a rope when lifting, to avoid damage or scratches to the unit.
- Refer to the installation manual of the outdoor unit for items not described in this manual.
- Do not dispose of any parts necessary for installation until the installation is complete.

2-1 PRECAUTIONS

- Be sure to read this manual before installing the indoor unit.
- When selecting installation site, refer to the installation pattern.
- This unit, both indoor and outdoor, is suitable for installation in a commercial and light industrial environment. If installed as a household appliance it could cause electromagnetic interference.
- Entrust installation to the place of purchase or a qualified serviceman. Improper installation could lead to leaks and, in worse cases, electric shock of fire.
- Use only parts provided with the unit or parts satisfying required specifications. Unspecified parts could cause the unit to fall out of place, or could lead to leaks and, in worse cases, electric shock or fire.
- Do not install or operate the unit in rooms mentioned below.
  - **Laden with mineral oil or filled with oil vapor or spray like in kitchens. (Plastic parts may deteriorate which could eventually cause the unit to fall out of place or could lead to leaks.)**
  - **Where corrosive gas like sulfurous gas exists. (Copper tubing and brazed spots may corrode, which could eventually lead to refrigerant leaks.)**
  - **Where volatile flammable gas like thinner or gasoline is used.**
  - **Where exposed to combustible gases and where volatile flammable gas like thinner or gasoline is used. (Gas near the unit could ignite.)**
  - **Where machines can generate electromagnetic waves. (Control system may malfunction.)**
  - **Where the air contains high levels of salt such as that near the ocean and where voltage fluctuates greatly such as that in factories. Also, in vehicles or vessels.**

2-2 ACCESSORIES

Check the following accessories are included with your unit.

Name	(1) Installation plate	(2) Attachment screws for the installation plate	(3) Paper pattern for installation	(4) Insulating tape
Quantity	1 set	8 pcs. → FXAQ15,20,25,32 type 9 pcs. → FXAQ40,50,63 type	1 pc.	1 pc.
Shape	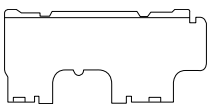	 M4 × 25L	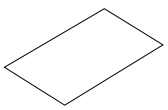	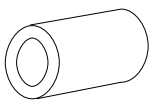

Name	(5) Clamp	(6) Securing screws	
Quantity	1 large 3 small	2 pcs.	
Shape		 M4 × 12L	(Other) • Operation manual • Installation manual

2-3 OPTIONAL ACCESSORIES

- These are two types of remote controllers: wired and wireless. Select a remote controller according to customer request and install in an appropriate place.

Remote controller type		Model
Wired type		BRC1H*, BRC1/2/3E*, BRC1D*
Wireless type	Heat pump type	BRC7EA628
	Cooling only type	BRC7EA629

* Refer to installation manual attached to the remote controller.

NOTE

- If the customer wishes to use a remote controller that is not listed above, select a suitable remote controller after consulting catalogs and technical materials.

For following items, take special care during installation and after finishing the work check the following table.

a. Items to be checked after completion of work

Items to be checked	If not properly done, what is likely to occur	Check
Are the indoor and outdoor unit fixed firmly?	The units may drop, vibrate or make noise.	
Is the outdoor unit fully installed?	The unit may malfunction or the components burn out.	
Is the gas leak test finished?	It may result in insufficient cooling.	
Is the unit fully insulated?	Condensate water may drip.	
Does drainage flow smoothly?	Condensate water may drip.	
Does the power supply voltage correspond to that shown on the name plate?	The unit may malfunction or the components burn out.	
Are wiring and piping correct?	The unit may malfunction or the components burn out.	
Is the unit safely earthed?	Dangerous at electric leakage.	
Is wiring size according to specifications?	The unit may malfunction or the components burn out.	
Is something blocking the air outlet or inlet of either the indoor or outdoor units?	It may result in insufficient cooling.	
Are refrigerant piping length and additional refrigerant charge noted down?	The refrigerant charge in the system is not clear.	

b. Items to be checked at time of delivery

Also review the “SAFETY PRECAUTIONS”

Items to be checked	Check
Are the control box cover, air filter, suction grille attached?	
Did you explain about operations while showing the instruction manual to your customer?	
Did you hand the instruction manual over to your customer?	

c. Points for explanation about operations

The items with ⚠ WARNING and ⚠ CAUTION marks in the instruction manual are the items pertaining to possibilities for bodily injury and material damage in addition to the general usage of the product. Accordingly, it is necessary that you make a full explanation about the described contents and also ask your customers to read the instruction manual.

2-4 NOTE TO THE INSTALLER

Be sure to instruct customers how to properly operate the unit (especially cleaning filters, operating different functions, and adjusting the temperature) by having them carry out operations themselves while looking at the manual.

3. SELECTING INSTALLATION SITE

(1) Select an installation site where the following conditions are fulfilled and that meets with your customer’s approval.

- In the upper space (including the back of the ceiling) of the indoor unit where there is no possible dripping of water from the refrigerant pipe, drain pipe, water pipe, etc.
- Where the wall is strong enough to bear the indoor unit weight.
- Where sufficient clearance for installation and maintenance can be ensured.
  (Refer to Fig. 1 and Fig. 2)
- Where optimum air distribution can be ensured.
- Where nothing blocks the air passage.
- Where condensate can be properly drained.
- Where the wall is not significantly tilted.
- Where not exposed to combustible gases.
- Where pipe between indoor and outdoor units is possible within the allowable limit.
  (Refer to the installation manual of the outdoor unit.)
- Install the indoor and outdoor units, power cable and transmission wiring, at least 1 m from TVs and radios, to prevent distorted pictures and static. (Depending on the type and source of the electrical waves, static may be heard even when more than 1 m away.)
- Install the indoor unit no less than 2.5 m above the floor. Where unavoidably lower, take what measures are necessary to keep hands out of the air inlet.

- Where the cool (warm) air reaches all across the room.

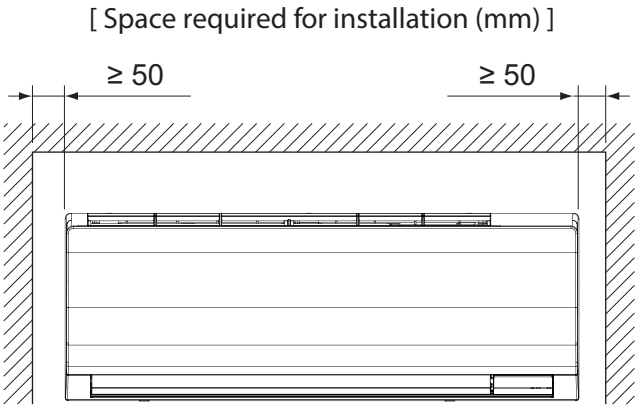

Fig. 1

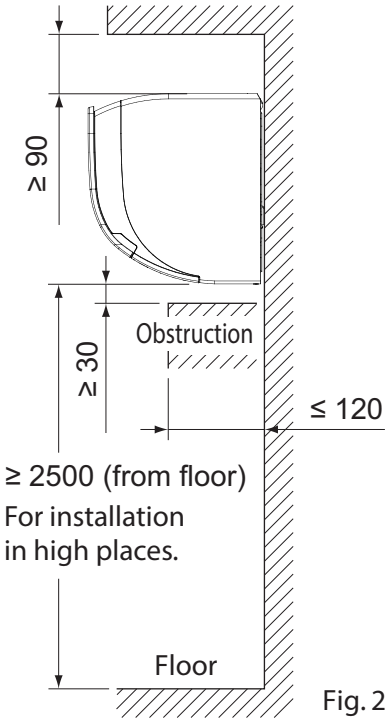

Fig. 2

CAUTION

- The indoor and outdoor units and the power supply wiring and remote controller cord must be installed at least 1m away from any televisions or radios. This is to prevent interference with picture and sound reception. (Interference may occur even at 1m away depending on the reception quality.)
- If installing the wireless kit, the distance of the signal sent from the remote controller might be shorter if there are fluorescent lights which are electrically started (such as with inverters, rapid starters, etc.) in the room. The indoor unit should be installed as far away from fluorescent lights as possible.

(2) Consider whether the place where the unit will be installed can support the full weight of the unit, and reinforce it with boards and beams, etc. if needed before proceeding with the installation. Also, reinforce the place to prevent vibration and noise before installing.

(3) The indoor unit may not be directly installed on the wall. Use the attached installation plate (1) before installing the unit.

4. INDOOR UNIT INSTALLATION

- Use only accessories and parts which are of the designated specification when installing.

CAUTION

- Install so that the unit does not tilt to either side or forward.
- Do not hold the unit by the horizontal flaps when lifting it. (This may damage the horizontal flaps.)

(1) Open the piping through-hole.

- The refrigerant pipe and drain pipe can be passed out in one of 6 directions: left, bottom-left, back-left, right, bottom-right, and back-right. **(Refer to Fig. 3)**

(2) Remove the installation plate (1) from the unit and attach to the wall.
(The installation panel is temporarily attached to the unit with screw.)
(Refer to Fig. 3)

(a) Secure the installation plate (1) to the wall using either screws or bolts.

- If using the attachment screws for the installation panel (2), attach using at least 4 screws on either side (for a total of 8 screws (15-32 class), 9 screws (40-63 class)) of the recommended installation cleat position on the included paper pattern for installation (3).
- If using bolts, attach using a M8 - M10 bolt (for a total of 2 bolts) on either side.
- If dealing with concrete, use commercially available foundation bolts (M8 - M10).

(3) If using the left, bottom-left, right, or bottom-right positions for the piping, cut out the through-hole for the piping in the front grille. (Refer to Fig. 4)

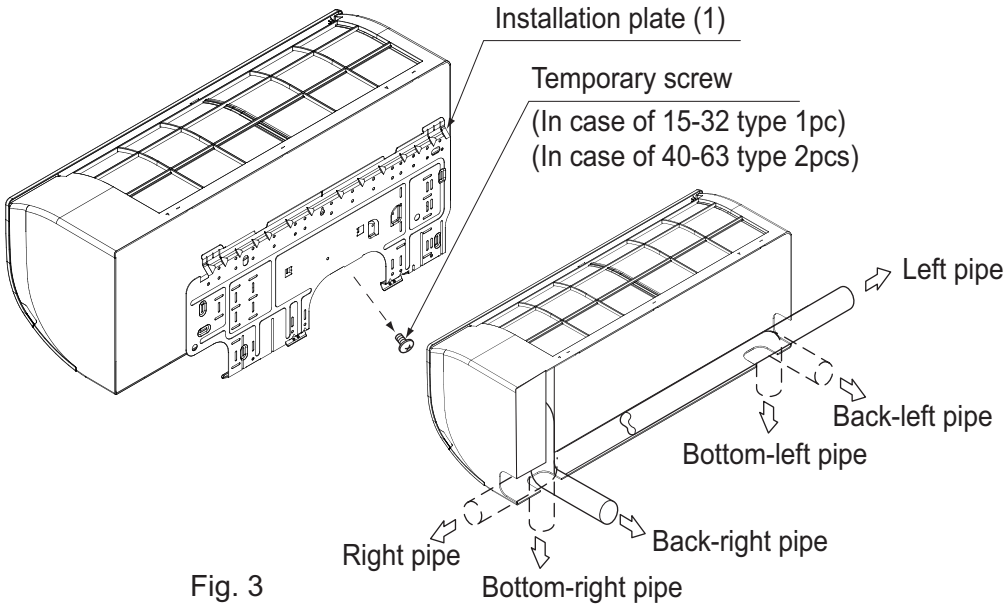

Fig. 3

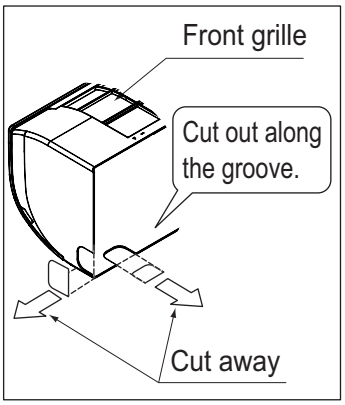

Fig. 4

(4) Remove the front panel and the service cover. (Refer to Fig. 5)

< How to remove the front panel and service cover >

(1) Open the front panel to the point where it stops.

(2) Push the hooks on either side of the front panel towards the sides of the main unit and remove. (You can also remove it by sliding the front panel either to the left or right and pulling it forward.)

(3) Remove the screw from the service cover and pull the handle forward.

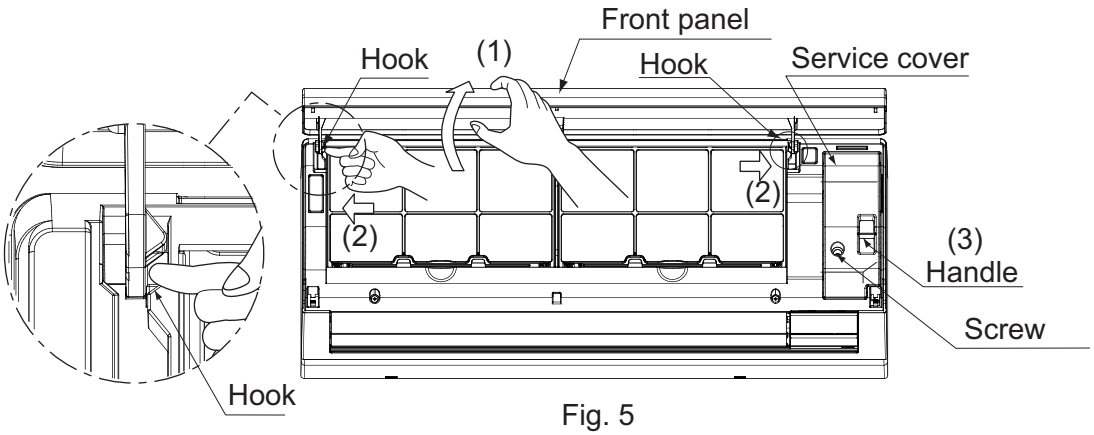

Fig. 5

(5) Point the pipe in the direction it will be passed out.

For right, bottom-right, and back-right piping (Refer to Fig. 6)

- Wrap the drain hose and the refrigerant piping together with the insulating tape (4) so that the drain hose is below the refrigerant piping.

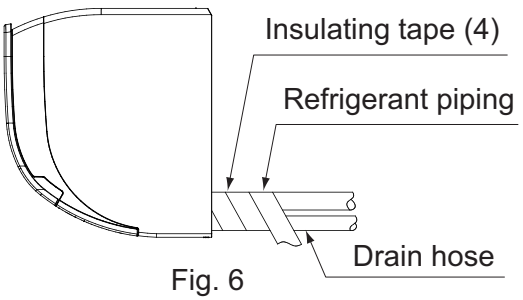

Fig. 6

For left, bottom-left, and left-back piping

- Remove the front grille. **(Refer to Fig. 7)**

< How to remove the front grille >

Remove the front grille as described below when securing the indoor unit with screws or when attaching Optional Accessories (wireless remote controller, adapter PC board, etc.).

(1) Remove the front panel.

(2) Remove the screws (2 places in case of FXAQ15,20,25,32 class/3 places in case of FXAQ40,50,63 class) securing the front grille.

(3) Remove the tabs (3 places) securing the front grille by pushing them in the direction of the arrows.

(4) Making sure not to catch the horizontal flaps, remove the front grille by pulling in the direction of the arrow.

CAUTION

- Remove the cardboard which is placed between filter and heat exchanger. Refer to figure below.

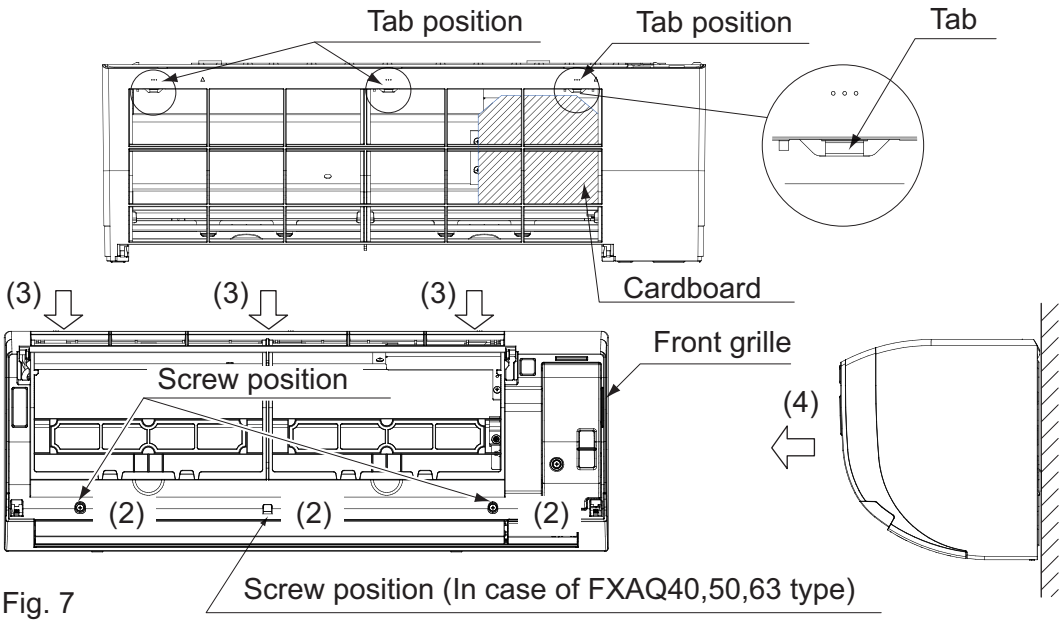

Fig. 7

- Remove the drain plug, the insulation tubing, and the drain hose from the drain pan and replace. **(Refer to Fig. 8)**
- Connect the local refrigerant piping ahead of time, matching it to the liquid pipe and gas pipe marks engraved on the installation plate (1).

< Replacing the drain hose and drain plug >

(1) Remove the drain plug and insulation tubing.
(2) Remove the drain hose and replace onto the left side.
(3) Replace the drain plug and the insulation tubing onto the right side.

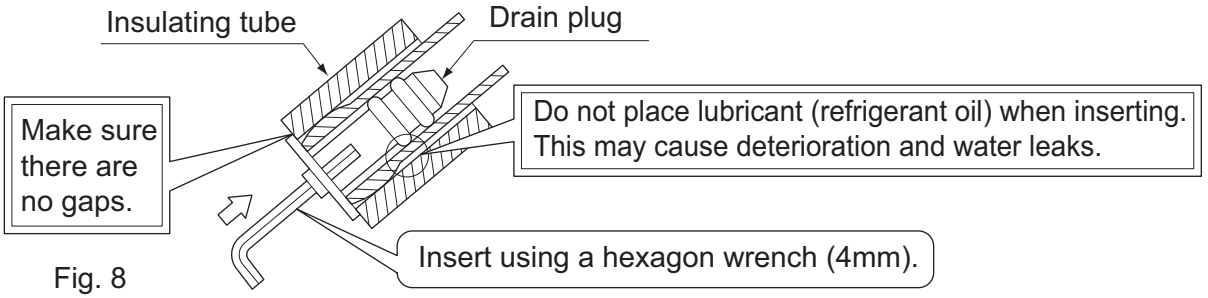

Fig. 8

(6) Hook the indoor unit onto the installation plate. (Refer to Fig. 9)

- Placing buffering material between the wall and the indoor unit at this time will make work easier.

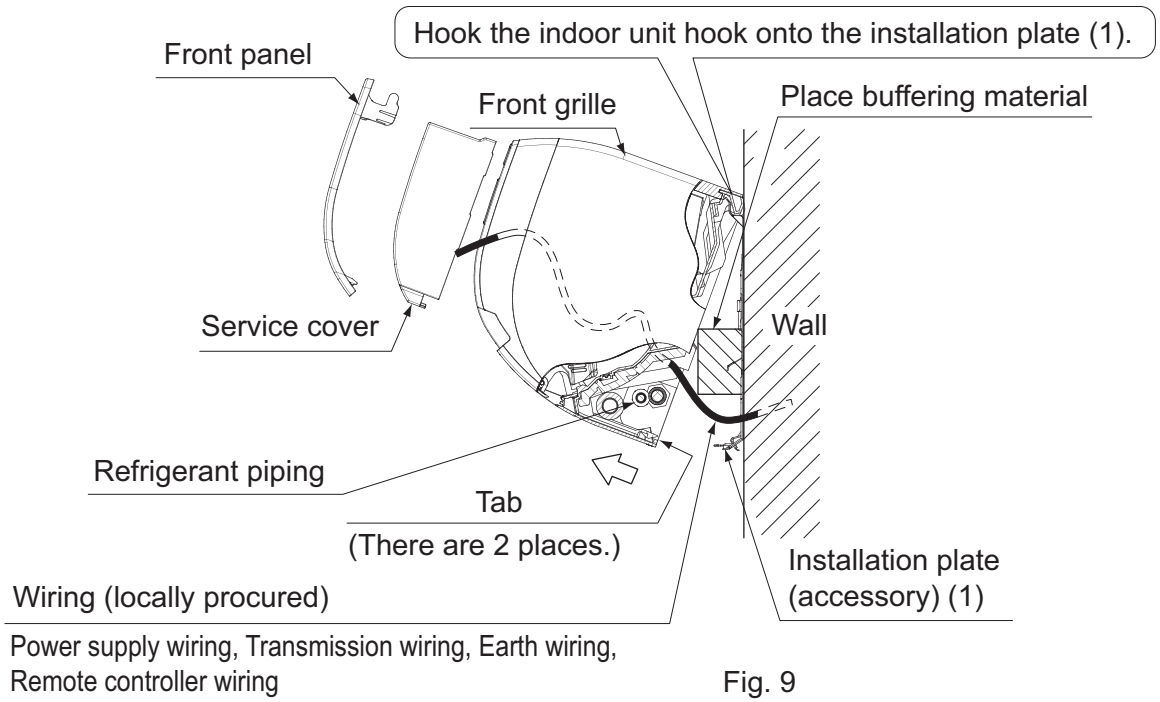

Fig. 9

For right, bottom-right, and back-right piping

- Pass the drain hose and the refrigerant piping to the wall.

(7) Pass power supply wiring, transmission wiring, earth wiring, and remote controller wiring through the wiring guide in from the back of the indoor unit and to the front.

(8) Connect the piping. (See "5. REFRIGERANT PIPING WORK" and Fig. 10)

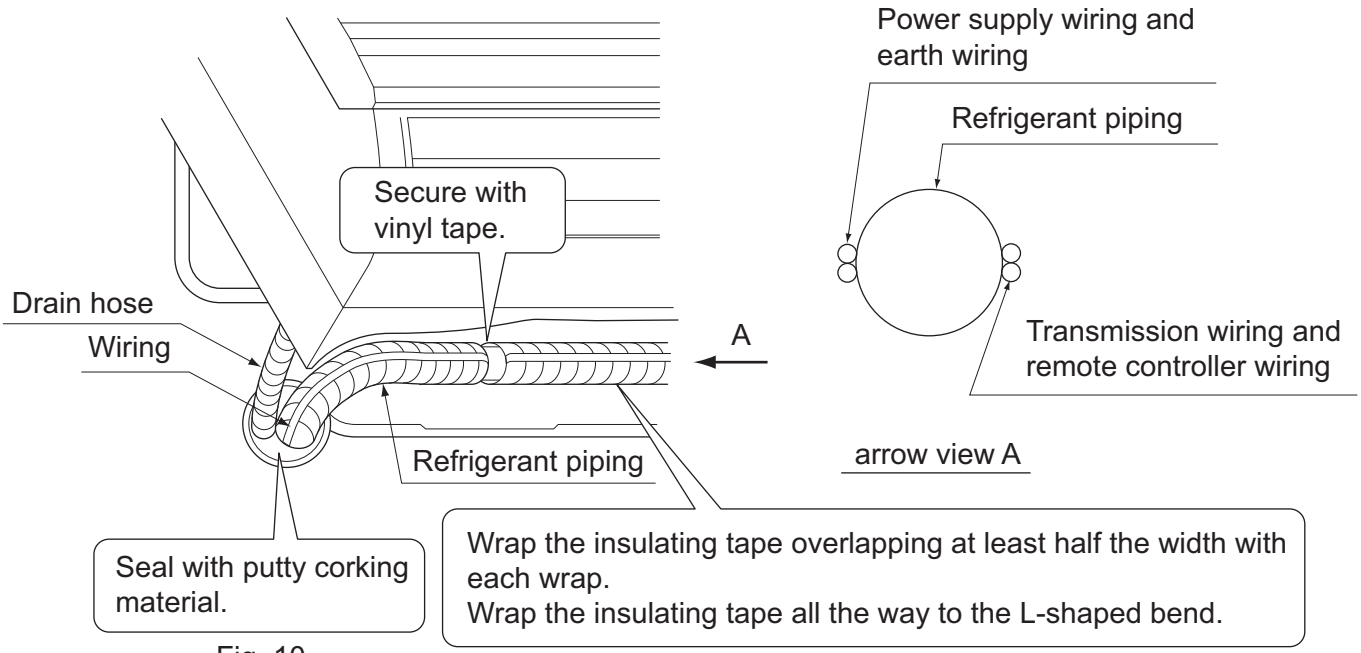

Fig. 10

- To avoid the influence of noise from the power supply line on the transmission wiring and the remote controller wiring, these wirings must be kept as far as possible from the power/earth wirings. As shown in the figure, keep the power supply wiring and the earth wiring together. Keep the transmission and remote controller wirings together and route them maintaining a good distance from the power supply/earth wirings (that is, on the other side of the power supply/earth wirings). Then, fix them securely on the refrigerant pipe.
- Seal the piping through-hole with putty corking material.

(9) Push on both bottom edges of the indoor unit using both hands and hook the tab on the back of the indoor unit onto the installation plate (1). (Refer to Fig. 9)

- At this time remove the buffering material placed in step (6).
- Make sure power supply wiring, transmission wiring, earth wiring and remote controller wiring are not caught inside the indoor unit.

■ When screwing in the indoor unit

- Remove the front grille. **(Refer to Fig. 7)**
- Secure the indoor unit to the installation plate (1) with the securing screws (6). **(Refer to Fig. 11)**

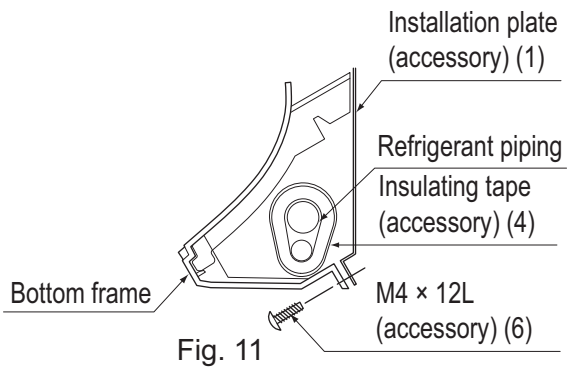

Fig. 11

5. REFRIGERANT PIPING WORK

<For refrigerant piping of outdoor units, see the installation manual attached to the outdoor unit.>
<Execute heat insulation work completely on both sides of the gas piping and the liquid piping. Otherwise, a water leakage can result sometimes.>
(When using a heat pump, the temperature of the gas piping can reach up to approximately 120°C, so use insulation which is sufficiently resistant.)
<Also, in cases where the temperature and humidity of the refrigerant piping sections might exceed 30°C or RH80 %, reinforce the refrigerant insulation. (20 mm or thicker) Condensation may form on the surface of the insulating material.>
<Before refrigerant piping work, check which type of refrigerant is used. Proper operation is not possible if the types of refrigerant are not the same.>

⚠ CAUTION

- **Use a pipe cutter and flare suitable for the type of refrigerant.**
- **Apply ester oil or ether oil around the flare section before connecting.**
- **To prevent dust, moisture or other foreign matter from infiltrating the tube, either pinch the end or cover it with tape.**
- **Do not allow anything other than the designated refrigerant to get mixed into the refrigerant circuit, such as air, etc. If any refrigerant gas leaks while working on the unit, ventilate the room thoroughly right away.**

- **Do not mix air or other gas with the specified refrigerant in the refrigeration cycle.**
- **Ventilate the room if refrigerant gas leaks during the work.**
- The outdoor unit is charged with refrigerant.
- Use copper alloy seamless pipes (ISO 1337)

- Be sure to use both a spanner and torque wrench together, as shown in the drawing, when connecting or disconnecting pipes to/from the unit. **(Refer to Fig. 12)**
- Refer to “Table 1” for the dimensions of flare nut spaces.
- When connecting the flare nut, coat the flare section (both inside and outside) with ester oil or ether oil, rotate three or four times first, then screw in. **(Refer to Fig. 13)**
- **Keep all the screw mounting resin parts (e.g., piping presser plates) away from oil.**
  If oil adheres, the strength of the screw mounting resin parts may drop.

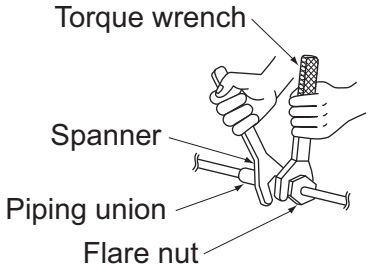

Fig. 12

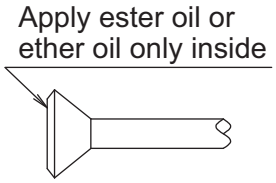

Fig. 13

CAUTION

- Over-tightening may cause the flare nuts to crack or the refrigerant to leak.

NOTE

- Use the flare nut included with the unit main body.

Table 1

Pipe size	Tightening torque (N·m)	Flare dimensions A (mm)	Flare
Ø6.4 (1/4”)	14.2 – 17.2	8.7 – 9.1	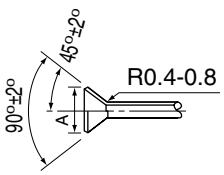
Ø9.5 (3/8”)	32.7 – 39.9	12.8 – 13.2	
Ø12.7 (1/2”)	49.5 – 60.3	16.2 – 16.6	
Ø15.9 (5/8”)	61.8 – 75.4	19.3 – 19.7	

- Refer to Table 1 to determine the proper tightening torque.

After the work is finished, make sure to check that there is no gas leak.

CAUTION

CAUTION TO BE TAKEN WHEN BRAZING REFRIGERANT PIPING

“Do not use flux when brazing refrigerant piping. Therefore, use the phosphor copper brazing filler metal (BCuP-2: JIS Z 3264/B-Cu93P-710/795: ISO 3677) which does not require flux.”
(Flux has extremely harmful influence on refrigerant piping systems. For instance, if the chlorine-based flux is used, it will cause pipe corrosion or, in particular, if the flux contains fluorine, it will damage the refrigerant oil.)

- Before brazing local refrigerant piping, nitrogen gas shall be blown through the piping to expel air from the piping.
  If your brazing is done without nitrogen gas blowing, a large amount of oxide film develops inside the piping and could cause system malfunction.
- When brazing the refrigerant piping, only begin brazing after having carried out nitrogen substitution or while inserting nitrogen into the refrigerant piping. Once this is done, connect the indoor unit with a flared or a flanged connection.

- Nitrogen should be set to 0.02 MPa with a pressure-reducing valve if brazing while inserting nitrogen into the piping. **(Refer to Fig.14)**

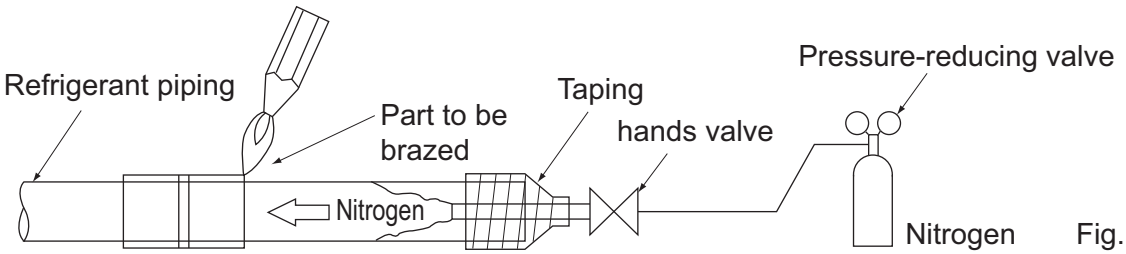

Fig. 14

⚠ CAUTION

Be sure to insulate any field piping all the way to the piping connection inside the unit. Any exposed piping may cause condensation or burns if touched.

- After checking for gas leaks, be sure to insulate the pipe connections using the supplementary piping insulation tubing and insulating tape (4). The insulating tape (4) should be wrapped from the L-shaped bend all the way to the end inside the unit. **(Refer to Fig. 15)**

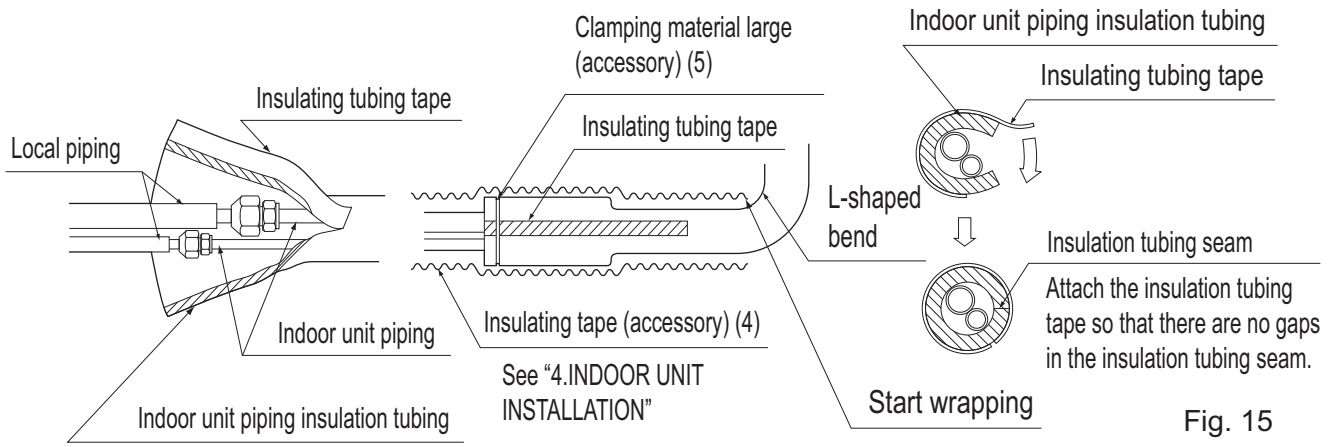

Fig. 15

⚠ CAUTION

Be sure to insulate any field piping all the way to the piping connection inside the unit. Any exposed piping may cause condensation or burns if touched.

6. DRAIN PIPING WORK

(1) Install the drain piping. (Refer to Fig. 16)

- The drain pipe should be short with a downward slope and should prevent air pockets from forming.
- Watch out for the points in the Fig. 16 when performing drain work.

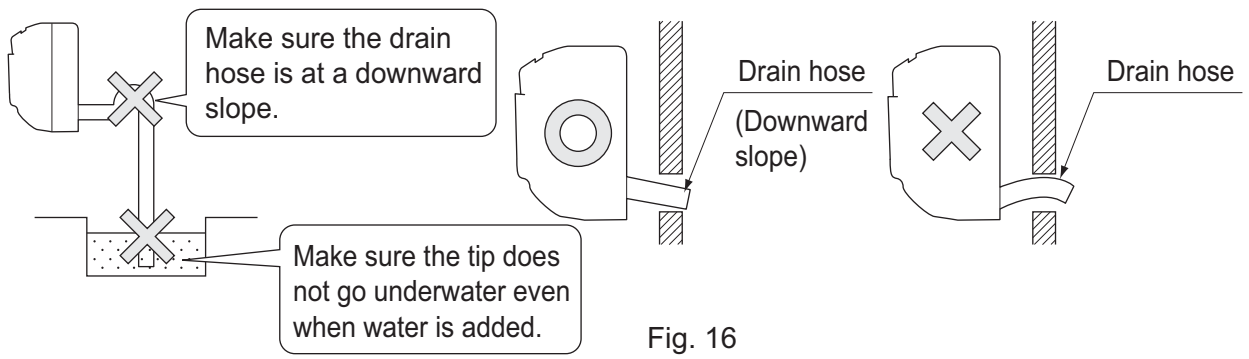

Fig. 16

- When extending the drain hose, use a commercially available drain extension hose, and be sure to insulate the extended section of the drain hose which is indoors. **(Refer to Fig. 17)**

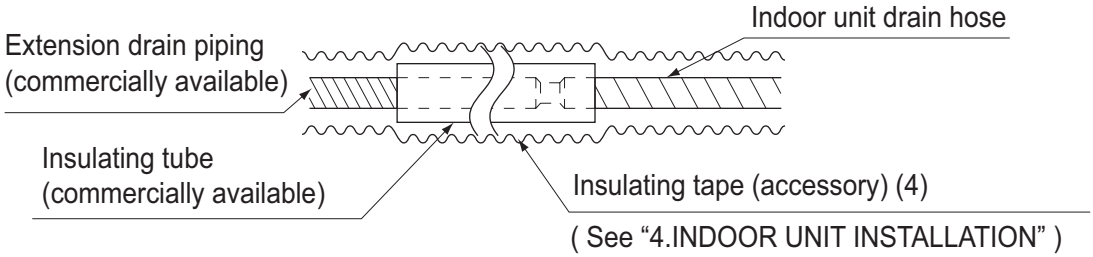

Fig. 17

- Make sure the diameter of the piping is the same as the piping (hard vinyl chloride, nominal diameter 13mm) or bigger.
- When directly connecting a hard vinyl chloride pipe joint (nominal diameter 13mm) to the drain hose connected to the indoor unit (i.e. for embedded piping, etc.), use a commercially available hard vinyl chloride pipe joint (nominal diameter 13mm). **(Refer to Fig. 18)**

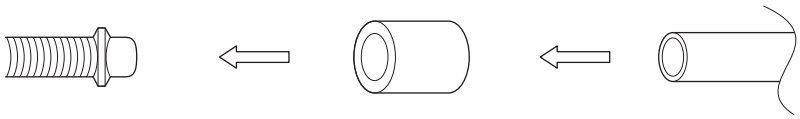

Fig. 18

(2) Make sure the drain works properly.

- After drain work is complete, perform a drain check by opening the front panel, **removing the air filter**, pouring water into the drain pan, and making sure water flows smoothly out of the drain hose. **(Refer to Fig. 19)**

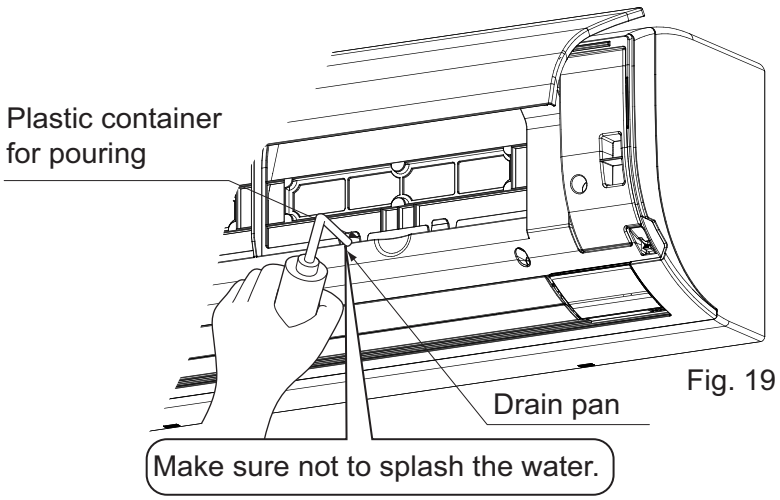

Fig. 19

⚠ CAUTION

- Drain piping connections
  Do not connect the drain piping directly to sewage pipes that smell of ammonia. The ammonia in the sewage might enter the indoor unit through the drain pipes and corrode the heat exchanger.
- Keep in mind that it will become the cause of getting drain pipe blocked if water collects on drain pipe.

7. ELECTRIC WIRING WORK

7-1 GENERAL INSTRUCTIONS

- All field supplied parts and materials and electric works must conform to local codes.
- Use copper wire only.
- For electric wiring work, refer to also “WIRING DIAGRAM” attached to the unit body.
- For remote controller wiring details, refer to the installation manual attached to the remote controller.
- All wiring must be performed by an authorized electrician.
- This system consists of multiple indoor units. Mark each indoor unit as unit A, unit B..., and be sure the terminal board wiring to the outdoor unit and BS unit are properly matched. If wiring and piping between the outdoor unit and an indoor unit are mismatched, the system may cause a malfunction.

- A main switch or other means for disconnection, having a contact separation in all poles, must be incorporated in the fixed wiring in accordance with relevant local and national legislation.
  Note that the operation will restart automatically if the main power supply is turned off and then turned back on again.
- Refer to the installation manual attached to the outdoor unit for the size of power supply wiring connected to the outdoor unit, the capacity of the circuit breaker and switch, and wiring instructions.
- Be sure to earth the air conditioner.
- Do not connect the earth wire to gas pipes, water pipes, lightning rods, or telephone earth wires.
  - Gas pipes: might cause explosions or fire if gas leaks.
  - Water pipes: no earthing effect if hard vinyl piping is used.
  - Telephone earth wires or lightning rods: might cause abnormally high electric potential in the earth during lighting storms.

7-2 ELECTRICAL CHARACTERISTICS

Units				Power supply		Fan motor	
Model	Hz	Volts	Voltage range	MCA	MFA	kW	FLA
FXAQ15AUV1B	50	220 - 240	Max. 264 Min. 198	0.3	16	0.040	0.2
FXAQ20AUV1B				0.3	16	0.040	0.2
FXAQ25AUV1B				0.4	16	0.040	0.3
FXAQ32AUV1B				0.4	16	0.040	0.3
FXAQ40AUV1B				0.4	16	0.043	0.3
FXAQ50AUV1B				0.5	16	0.043	0.4
FXAQ63AUV1B				0.7	16	0.043	0.5

MCA: Min. Circuit Amps (A); MFA: Max. Fuse Amps (A)
kW: Fan Motor Rated Output (kW); FLA: Full Load Amps (A)

7-3 SPECIFICATIONS FOR FIELD SUPPLIED FUSES AND WIRE

Model	Power supply wiring			Remote controller wiring Transmission wiring	
	Field fuses	Wire	Size	Wire	Size
FXAQ15AUV1B	16A	H05VV - U3G	Wire size and length must comply with local codes.	Vinyl cord with sheath or cable (2 wire)	0.75 - 1.25 mm^2
FXAQ20AUV1B					
FXAQ25AUV1B					
FXAQ32AUV1B					
FXAQ40AUV1B					
FXAQ50AUV1B					
FXAQ63AUV1B					

Allowable length of transmission wirings and remote controller wiring are as follows.
(1) Outdoor unit - Indoor unit: Max. 1000m (Max. wiring length: 2000m)
(2) Indoor unit - Remote controller: Max. 500m

NOTE

1. Shows only in case of protected pipes. Use H07RN-F in case of no protection.
2. Vinyl cord with sheath or cable (Insulated thickness: 1mm or more)

CAUTION

- Arrange the wires and fix a cover firmly so that the cover does not float during wiring work.
- Do not clamp remote controller wiring and transmission wiring together with power supply wiring. Doing so may cause malfunction.
- Remote controller wiring, and transmission wiring should be located at least 50 mm from power supply wiring. Not following this guideline may result in malfunction due to electrical noise.

8. HOW TO CONNECT WIRINGS AND WIRING EXAMPLE

8-1 HOW TO CONNECT WIRINGS

Methods of wiring power supply, units and connecting remote controller wiring

- Power supply wiring and earth wire
  Unscrew and remove the service cover.
  Connect the power supply wiring and earth wiring to the power supply terminal block (3P).
  When doing this, tie the power supply wiring and the earth wiring using the included clamp (small) (5) and then firmly secure using the included clamp (small) (5) according to the figure.
  (Refer to Fig. 21)
- Transmission wiring and remote controller wiring
  Unscrew and remove the service cover.
  Connect the remote controller wiring and the transmission wiring to the terminal block (6P).
  When doing this, tie the remote controller wiring and the transmission wiring using the included clamp (small) (5) and then firmly secure using the included clamp (small) (5) according to the figure. **(Refer to Fig. 21)**
- Be sure to attach it to prevent the infiltration of water as well as any insects and other small creatures from the outside. Otherwise a short-circuit may occur inside the control box.

[PRECAUTIONS]

Observe the notes mentioned below when wiring to the power supply terminal block and terminal block for remote controller.

Tightening torque for the terminal blocks

- Use the correct screwdriver for tightening the terminal screws. If the blade of screwdriver is too small, the head of the screw might be damaged, and the screw will not be properly tightened.
- If the terminal screws are tightened too hard, screws might be damaged.
- Refer to the table below for the tightening torque of the terminal screws.

	Size	Tightening torque (N·m)
Terminal block for remote controller (6P)	M3.5	0.79 - 0.97
Power supply and Earth terminal block (3P)	M4	1.18 - 1.44

When none are available, follow the instructions below.
Do not connect wires of different gauge to the same earth terminal.

Connect wires of the same gauge to both side.

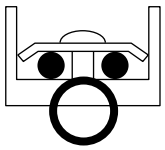

Do not connect wires of the same gauge to one side.

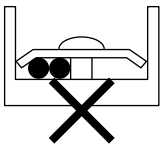

Do not connect wires of different gauges.

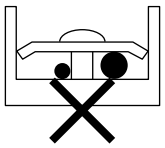

Looseness in the connection may deteriorate protection.

Precautions to be taken for power supply wiring

Use a round crimp-style terminal for connection to the power supply terminal block. In case it cannot be used due to unavoidable reasons, be sure to observe the following instructions.
Be sure to peel off the sheath of power supply wiring more than 40 mm. **(Refer to Fig. 20)**

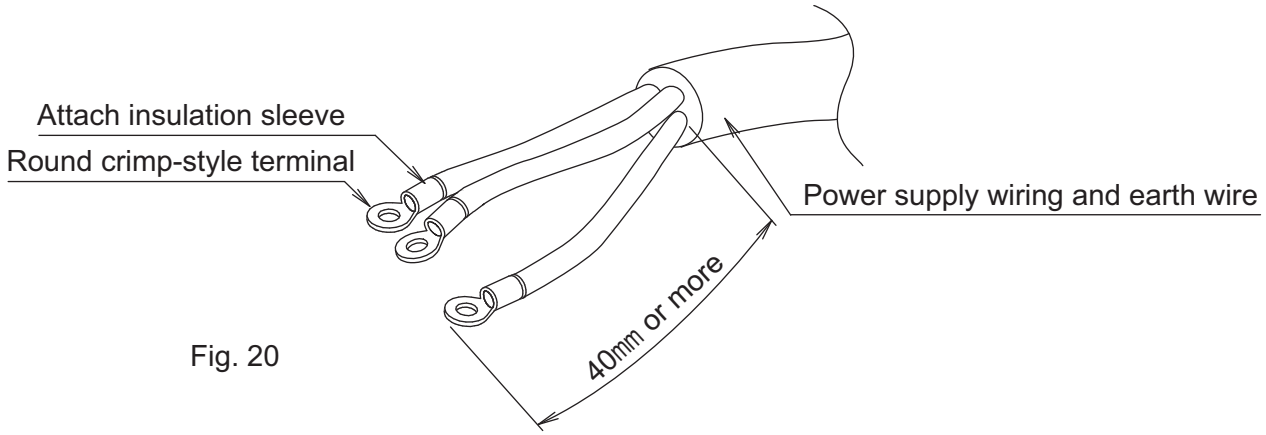

Fig. 20

- For remote controller wiring, refer to the “INSTALLATION MANUAL OF REMOTE CONTROLLER.” attached to the remote controller.
- **Never connect power supply wiring to the terminal block for remote controller. A mistake of the sort could damage the entire system.**
- Use only specified wire and tightly connect wires to terminals. Be careful wires do not place external stress on terminals. Keep wiring in neat order and so as not to obstruct other equipment such as popping open the control box cover. Make sure the cover closes tight. Incomplete connections could result in overheating, and in worse case, electric shock or fire.

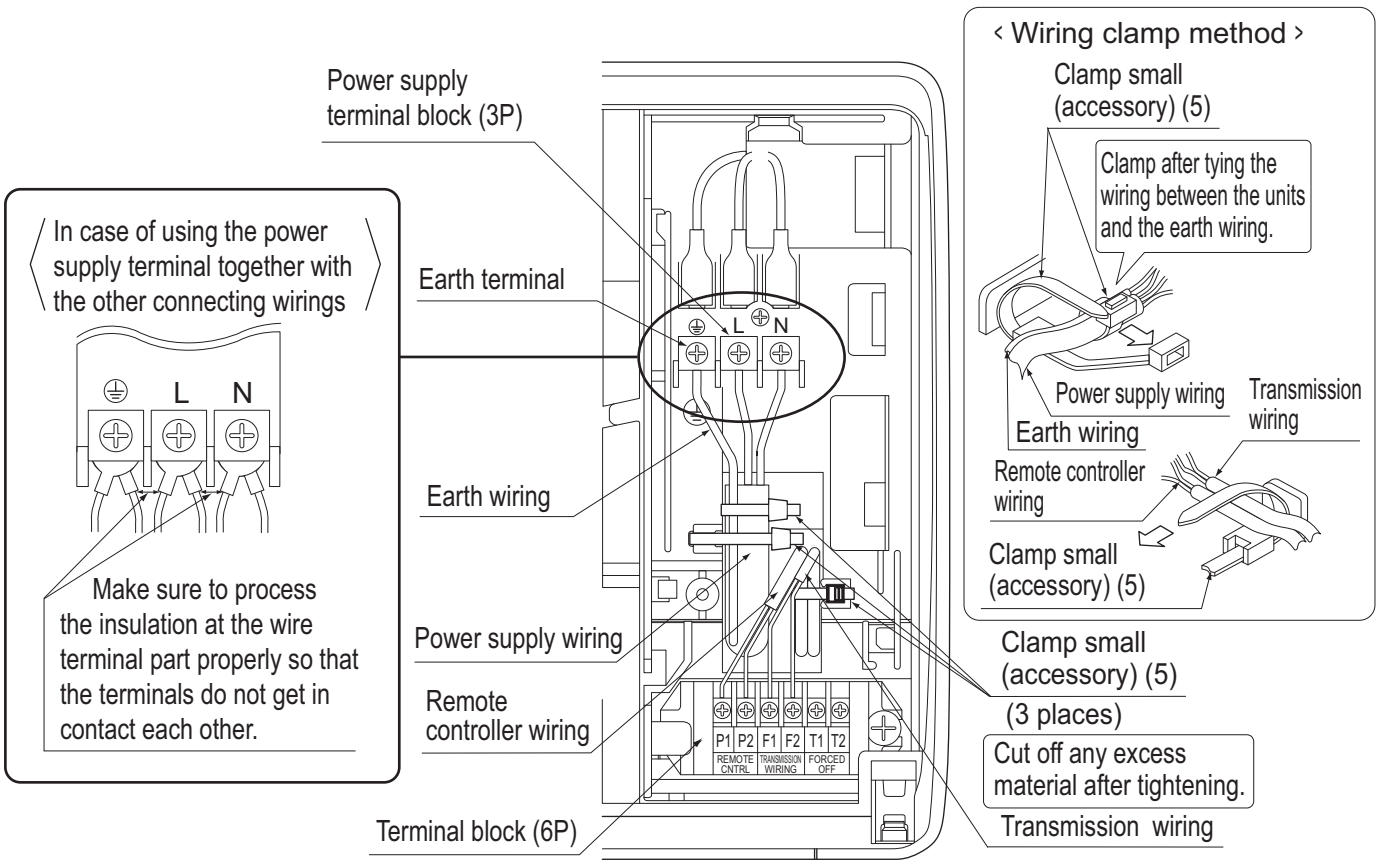

Fig. 21

CAUTION

- Be sure to attach the sealing material and putty (field supplied) to hole of wiring to prevent the infiltration of water as well as any insects and other small creatures from outside. Otherwise a short-circuit may occur inside the control box.

- When clamping the wirings, be sure no pressure is applied to the wire connections by using the included clamp to make appropriate clamps. Also, when wiring, make sure the cover on the control box fits snugly by arranging the wirings neatly and attaching the service cover firmly. When attaching the service cover, make sure no wirings get caught in the edges. Pass wiring through the wiring through holes to prevent damage to them.
- Make sure the remote controller wiring, and transmission wiring between the units, and other electrical wiring do not pass through the same locations outside the machine, separating them by at least 50mm, otherwise electrical noise (external static) could cause mistaken operation or breakage.
- Use only specified wire and tightly connect wires to terminals. Be careful wires do not place external stress on terminals. Keep wiring in neat order and so as not to obstruct other equipment such as popping open the service cover. Make sure the cover closes tight. Incomplete connections could result in overheating, and in worse case, electric shock or fire.

8-2 WIRING EXAMPLE

- Fit the power supply wiring of each unit with a switch and fuse as shown in the drawing.

COMPLETE SYSTEM EXAMPLE (3 systems)

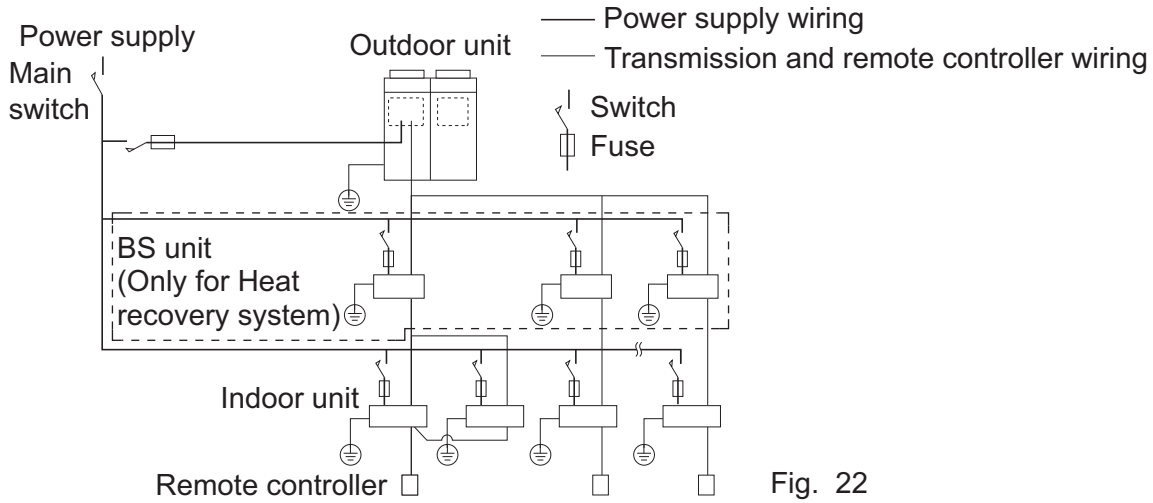

Fig. 22

1. When using 1 remote controller for 1 indoor unit. (Normal operation)

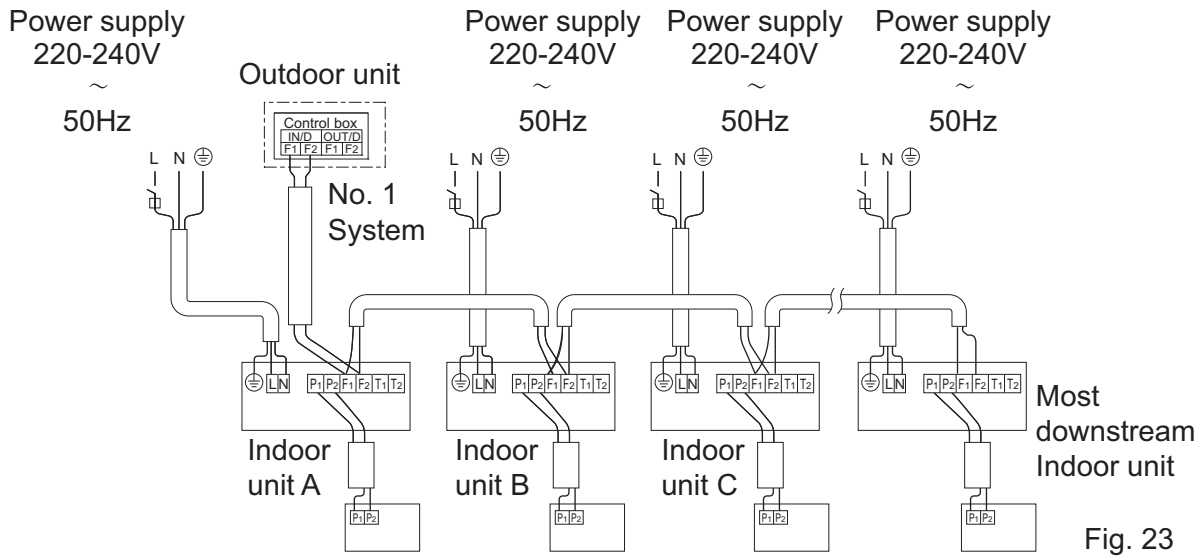

Fig. 23

2. For group control or use with 2 remote controllers

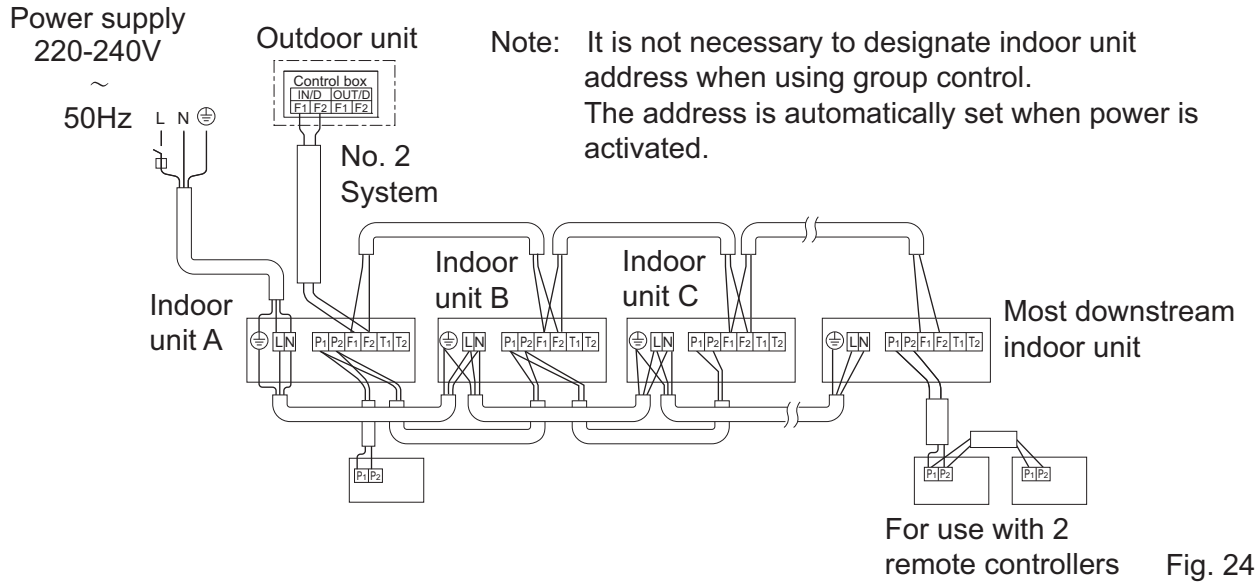

Fig. 24

3. When including BS unit

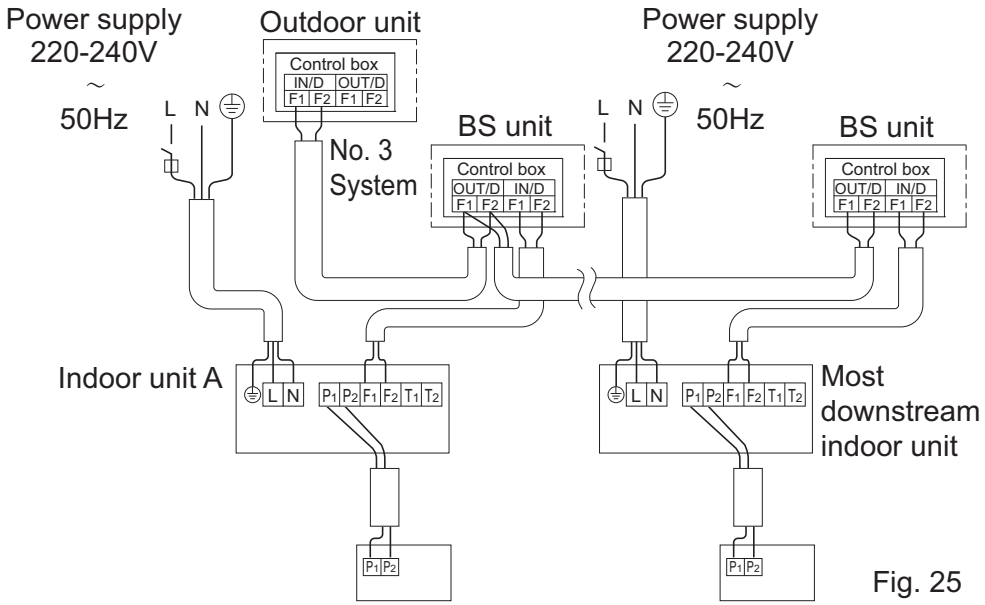

Fig. 25

[PRECAUTIONS]

1. All transmission wiring except for the remote controller wires is polarized and must match the terminal symbol.
2. A single switch can be used to supply power to units on the same system. However, branch switches and branch circuit breakers must be selected carefully.
3. Do not earth the equipment on gas pipes, water pipes or lightning rods, or cross earth with telephones. Improper earthing could result in electric shock.

8-3 CONTROL BY 2 REMOTE CONTROLLERS (CONTROLLING 1 INDOOR UNIT BY 2 REMOTE CONTROLLERS)

- When using 2 remote controllers, one must be set to “MAIN” and the other to “SUB”.

MAIN/SUB CHANGEOVER

- Refer to the manual attached to the remote controller.

Wiring Method

(1) Remove the control box cover.

(2) Add wiring between the remote controller 2 (Sub) and the terminal (P1, P2) of the terminal block (X1M) for the remote controller in the control box. (There is no polarity.)

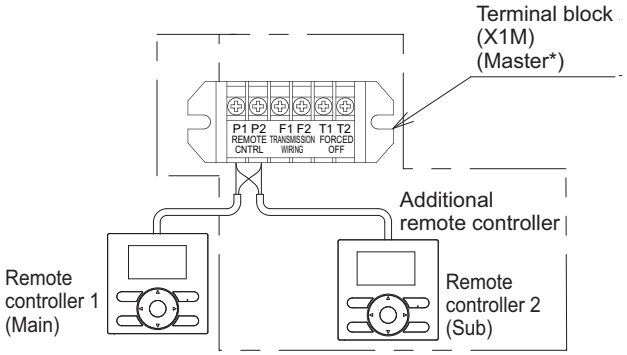

* For simultaneous operation system, be sure to connect the remote controller to the master unit.

Fig. 26

NOTE

- Terminal numbers of outdoor and indoor units must match.

8-4 COMPUTERISED CONTROL (FORCED OFF AND ON/OFF OPERATION)

(1) Wire specifications and how to perform wiring

- Connect the input from outside to terminals T1 and T2 of the terminal block (6P) for remote controller.

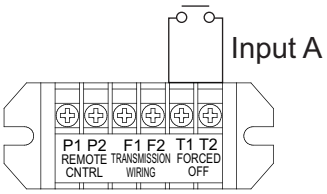

Fig. 27

Wire specification	Sheathed vinyl cord or cable (2 wire)
Gauge	0.75 - 1.25 mm^2
Length	Max. 100 m
External terminal	Contact that can ensure the minimum applicable load of 15V DC, 1 mA.

(2) Actuation

- The following table explains FORCED OFF and ON/OFF OPERATIONS in response to Input A.

FORCED OFF	ON/OFF OPERATION
Input ON stops operation (impossible by remote controllers).	Input OFF → ON turns ON unit.
Input OFF enables control by remote controller.	Input ON → OFF turns OFF unit.

(3) How to select FORCED OFF and ON/OFF OPERATION

- Turn the power on and then use the remote controller to select operation.

8-5 CENTRALIZED CONTROL

- For centralized control, it is necessary to designate the group No. For details, refer to the manual of each optional controllers for centralized control.

When implementing group control

- When using as a pair unit or as a master unit for simultaneous multiple unit operation, you may carry out simultaneous start/stop (group) control up to 16 units with the remote controller. **(Refer to Fig. 28)**
- In this case, all the indoor units in the group will operate in accordance with the group control remote controller.
- The thermistor reading of room temperature is effective only for the indoor unit connected to the remote controller.

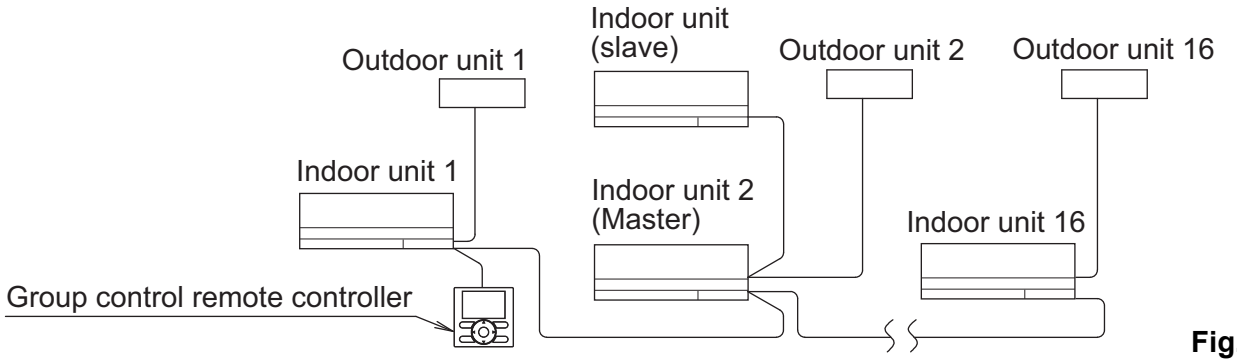

Fig. 28

Wiring Method

(1) Remove the control box cover. (Refer to “5. INDOOR UNIT INSTALLATION”.)

(2) Lay crossover between the terminals (P1, P2) inside the control box for the remote controller. (There is no polarity.) **(Refer to Fig. 29)**

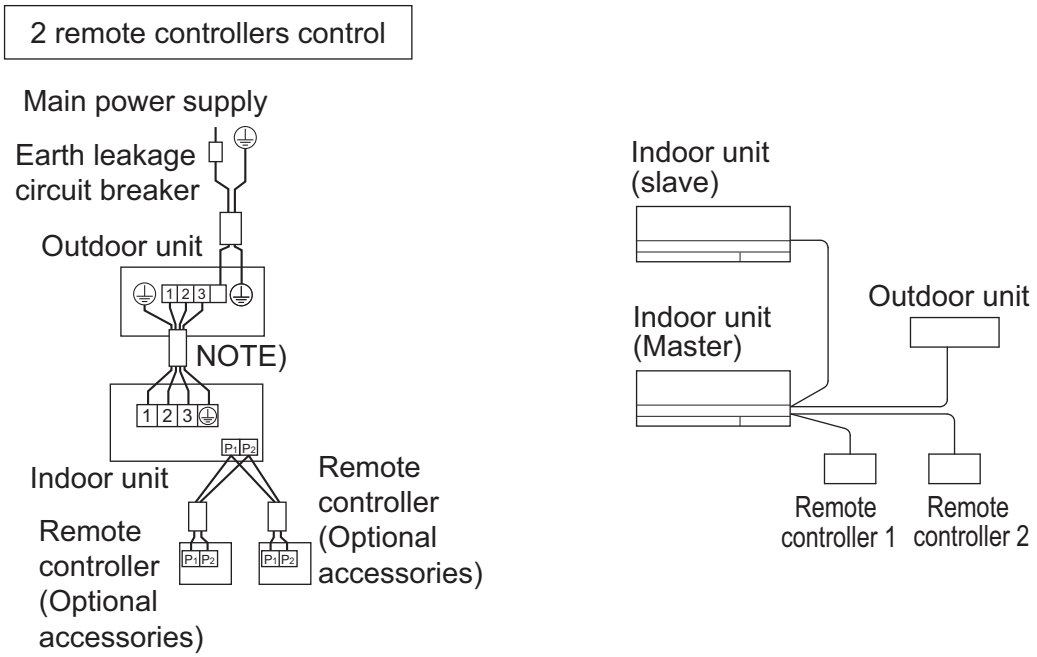

Fig. 29

NOTE

- Terminal numbers of outdoor and indoor units must match.

9. FIELD SETTINGS

(1) Make sure the service covers are closed on the indoor and outdoor units.
(2) Field settings must be made from the remote controller and in accordance with installation conditions.

- Settings can be made by changing the “Mode No”, “FIRST CODE NO.” and “SECOND CODE NO.”.
- The “Field Settings” included with the remote control lists the order of the settings and method of operation.
  *Setting is made in all units in a group. To set for individual indoor units or to check the setting, use the mode Nos. (with “2” in upper digit) in parentheses ( ).

9-1 SETTING AIR FILTER SIGN

- Remote controllers are equipped with liquid crystal display air filter signs to display the time to clean air filters.
- Change the SECOND CODE NO. according to Table 2 depending on the amount of dirt or dust in the room. (SECOND CODE NO. is factory set to “01” for air filter contamination-light)

Table 2

Setting	Spacing time of display air filter sign	Mode No.	FIRST CODE NO.	SECOND CODE NO.
Air filter contamination-light	Approx. 200 hrs	10 (20)	0	01
Air filter contamination-heavy	Approx. 100 hrs			02

9-2 SETTING AIR FLOWRATE INCREASE MODE

- It is possible to raise set airflow (HIGH and LOW) from the field. Change the SECOND CODE NO. as shown in Table 3 to suit your needs.
  (SECOND CODE NO. is factory set to “01” for Standard.)

Table 3

Setting	Mode No.	FIRST CODE NO.	SECOND CODE NO.
Standard	13 (23)	0	01
A little increase			02
Increase			03

<When using wireless remote controllers>

- When using wireless remote controllers, wireless remote controller address setting is necessary. Refer to the installation manual attached to the wireless remote controller for setting instructions.
  - Set the remote controller to the field set mode. For details, refer to the “HOW TO SET IN THE FIELD”, in the remote controller manual.
  - When in the field set mode, select mode No. 12, then set the first code (switch) No. to “1”. Then set second code (position) No. to “01” for FORCED OFF and “02” for ON/OFF OPERATION.
    (FORCED OFF at factory set) **(Refer to Fig. 30)**

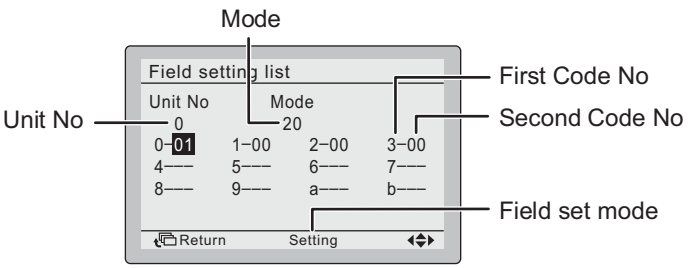

Fig. 30

10. TEST OPERATION

Make sure the service covers are closed on the indoor and outdoor units.
Refer to the installation manual of the outdoor unit.

- The operation lamp of the remote controller will flash when a malfunction occurs. Check the malfunction code on the liquid crystal display to identify the point of trouble. An explanation of malfunction codes and the corresponding trouble is provided in the installation manual of the outdoor unit or the service manual. If any of the items in Table 4 are displayed, there may be a problem with the wiring or power, so check the wiring again.

  Table 4

Remote controller display	Content
“ ” is lit up	• There is a short circuit at the FORCED OFF terminals (T1, T2).
“U4” is lit up “UH” is lit up	• The power on the outdoor unit is off. • The outdoor unit has not been wired for power supply. • Incorrect wiring for the transmission wiring and/or FORCED OFF wiring. • The branch wiring is cut.
No display	• The power on the indoor unit is off. • The indoor unit has not been wired for power supply. • Incorrect wiring for the remote controller wiring, the transmission wiring, and/or the FORCED OFF wiring. • The remote controller wiring is cut.

- In order to protect the indoor unit, instruct the customer not to operate the air conditioner until the interior work is completed if the interior work has not been finished at the end of the test run.
  (If the air conditioner is operated, substances discharged from the paint, adhesive, etc. can contaminate the indoor unit, and they may cause splashing or leakage of water.)

NOTE

- After the test run is finished, check the items listed in “**b. Items to be checked at time of delivery**”.

11. WIRING DIAGRAM

Unified Wiring Diagram Legend

For applied parts and numbering, refer to the wiring diagram on the unit. Part numbering is by Arabic numbers in ascending order for each part and is represented in the overview below by symbol "*" in the part code.

:	CIRCUIT BREAKER	:	PROTECTIVE EARTH
:	CONNECTION	:	PROTECTIVE EARTH (SCREW)
:	CONNECTOR	:	RECTIFIER
:	EARTH	:	RELAY CONNECTOR
:	FIELD WIRING	:	SHORT-CIRCUIT CONNECTOR
:	FUSE	:	TERMINAL
INDOOR :	INDOOR UNIT	:	TERMINAL STRIP
OUTDOOR :	OUTDOOR UNIT	:	WIRE CLAMP

BLK	:	BLACK	GRN	:	GREEN	PNK	:	PINK	WHT	:	WHITE
BLU	:	BLUE	GRY	:	GREY	PRP, PPL	:	PURPLE	YLW	:	YELLOW
BRN	:	BROWN	ORG	:	ORANGE	RED	:	RED			

A*P	:	PRINTED CIRCUIT BOARD	PS	:	SWITCHING POWER SUPPLY
BS*	:	PUSHBUTTON ON/OFF, OPERATION SWITCH	PTC*	:	THERMISTOR PTC
BZ, H*O	:	BUZZER	Q*	:	INSULATED GATE BIPOLAR TRANSISTOR (IGBT)
C*	:	CAPACITOR			
AC*, CN*, E*, HA*, HE*, HL*, HN*, HR*, MR*_A, MR*_B, S*, U, V, W, X*A, K*R_*	:	CONNECTION, CONNECTOR	Q*DI	:	EARTH LEAK CIRCUIT BREAKER
			Q*L	:	OVERLOAD PROTECTOR
			Q*M	:	THERMO SWITCH
D*, V*D	:	DIODE	R*	:	RESISTOR
DB*	:	DIODE BRIDGE	R*T	:	THERMISTOR
DS*	:	DIP SWITCH	RC	:	RECEIVER
E*H	:	HEATER	S*C	:	LIMIT SWITCH
F*U, FU* (FOR CHARACTERISTICS, REFER TO PCB INSIDE YOUR UNIT)	:	FUSE	S*L	:	FLOAT SWITCH
			S*NPH	:	PRESSURE SENSOR (HIGH)
FG*	:	CONNECTOR (FRAME GROUND)	S*NPL	:	PRESSURE SENSOR (LOW)
H*	:	HARNESS	S*PH, HPS*	:	PRESSURE SWITCH (HIGH)
H*P, LED*, V*L	:	PILOT LAMP, LIGHT EMITTING DIODE	S*PL	:	PRESSURE SWITCH (LOW)
HAP	:	LIGHT EMITTING DIODE (SERVICE MONITOR GREEN)	S*T	:	THERMOSTAT
HIGH VOLTAGE	:	HIGH VOLTAGE	S*RH	:	HUMIDITY SENSOR
IES	:	INTELLIGENT EYE SENSOR	S*W, SW*	:	OPERATION SWITCH
IPM*	:	INTELLIGENT POWER MODULE	SA*, F1S	:	SURGE ARRESTOR
K*R, KCR, KFR, KHuR, K*M	:	MAGNETIC RELAY	SR*, WLU	:	SIGNAL RECEIVER
L	:	LIVE	SS*	:	SELECTOR SWITCH
L*	:	COIL	SHEET METAL	:	TERMINAL STRIP FIXED PLATE
L*R	:	REACTOR	T*R	:	TRANSFORMER
M*	:	STEPPER MOTOR	TC, TRC	:	TRANSMITTER
M*C	:	COMPRESSOR MOTOR	V*, R*V	:	VARISTOR
M*F	:	FAN MOTOR	V*R	:	DIODE BRIDGE
M*P	:	DRAIN PUMP MOTOR	WRC	:	WIRELESS REMOTE CONTROLLER
M*S	:	SWING MOTOR	X*	:	TERMINAL
MR*, MRCW*, MRM*, MRN*	:	MAGNETIC RELAY	X*M	:	TERMINAL STRIP (BLOCK)
N	:	NEUTRAL	Y*E	:	ELECTRONIC EXPANSION VALVE COIL
n=*, N=*	:	NUMBER OF PASSES THROUGH FERRITE CORE	Y*R, Y*S	:	REVERSING SOLENOID VALVE COIL
PAM	:	PULSE-AMPLITUDE MODULATION	Z*C	:	FERRITE CORE
PCB*	:	PRINTED CIRCUIT BOARD	ZF, Z*F	:	NOISE FILTER
PM*	:	POWER MODULE			

DAIKIN EUROPE N.V.
Zandvoordestraat 300, B-8400 Oostende, Belgium

Copyright 2017 Daikin

EAC

4P494115-1C 2018.04