Installer and user reference guide

VRV IV system air conditioner

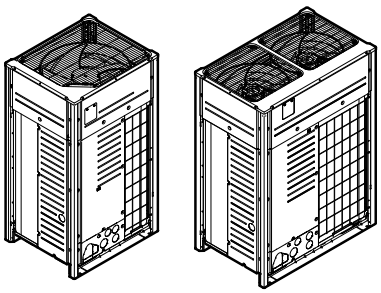

REYQ8T7Y1B
REYQ10T7Y1B
REYQ12T7Y1B
REYQ14T7Y1B
REYQ16T7Y1B
REYQ18T7Y1B
REYQ20T7Y1B

REMQ5T7Y1B

Installer and user reference guide
VRV IV system air conditioner

English

Table of contents

1 General safety precautions 3
1.1 About the documentation 3
1.1.1 Meaning of warnings and symbols 3
1.2 For the user 4
1.3 For the installer 4
1.3.1 General 4
1.3.2 Installation site 5
1.3.3 Refrigerant 5
1.3.4 Brine 6
1.3.5 Water 6
1.3.6 Electrical 6
2 About the documentation 7
2.1 About this document 7

For the installer 7

3 About the box 7
3.1 Overview: About the box 7
3.2 To unpack the outdoor unit 7
3.3 To remove the accessories from the outdoor unit 8
3.4 Accessory pipes: Diameters 8
3.5 To remove the transportation stay 8
4 About the units and options 9
4.1 Overview: About the units and options 9
4.2 Identification label: Outdoor unit 9
4.3 About the outdoor unit 9
4.4 System layout 9
4.5 Combining units and options 10
4.5.1 About combining units and options 10
4.5.2 Possible combinations of indoor units 10
4.5.3 Possible combinations of outdoor units 10
4.5.4 Possible options for the outdoor unit 10
5 Preparation 11
5.1 Overview: Preparation 11
5.2 Preparing the installation site 11
5.2.1 Installation site requirements of the outdoor unit 11
5.2.2 Additional installation site requirements of the outdoor unit in cold climates 12
5.2.3 Securing safety against refrigerant leaks 13
5.3 Preparing refrigerant piping 13
5.3.1 Refrigerant piping requirements 13
5.3.2 To select the piping size 14
5.3.3 To select refrigerant branch kits 15
5.3.4 About the piping length 15
5.3.5 Single outdoor units and standard multi-outdoor-unit combinations >20 HP 16
5.3.6 Standard multi-outdoor-unit combinations ≤20 HP and free multi-outdoor-unit combinations 17
5.3.7 Multiple outdoor units: Possible layouts 18
5.4 Preparing electrical wiring 19
5.4.1 About electrical compliance 19
5.4.2 Safety device requirements 20
6 Installation 20
6.1 Overview: Installation 20
6.2 Opening the units 21
6.2.1 To open the outdoor unit 21
6.2.2 To open the electrical component box of the outdoor unit 21
6.3 Mounting the outdoor unit 21
6.3.1 To provide the installation structure 21
6.4 Connecting the refrigerant piping 22
6.4.1 Precautions when connecting the refrigerant piping 22
6.4.2 About connecting the refrigerant piping 22
6.4.3 To route the refrigerant piping 22
6.4.4 To connect the refrigerant piping to the outdoor unit 23
6.4.5 To connect the multi connection piping kit 23
6.4.6 Multiple outdoor units: Knockout holes 23
6.4.7 To connect the refrigerant branching kit 23
6.4.8 To protect against contamination 23
6.4.9 To braze the pipe end 24
6.4.10 Using the stop valve and service port 24
6.4.11 To remove the pinched pipes 25
6.5 Checking the refrigerant piping 26
6.5.1 About checking the refrigerant piping 26
6.5.2 Checking refrigerant piping: General guidelines 26
6.5.3 Checking refrigerant piping: Setup 26
6.5.4 To perform a leak test 26
6.5.5 To perform vacuum drying 27
6.6 To insulate the refrigerant piping 27
6.7 Charging refrigerant 27
6.7.1 Precautions when charging refrigerant 27
6.7.2 About charging refrigerant 28
6.7.3 To determine the additional refrigerant amount 28
6.7.4 To charge refrigerant: Flow chart 29
6.7.5 To charge refrigerant 31
6.7.6 Step 6a: To automatically charge refrigerant 32
6.7.7 Step 6b: To manually charge refrigerant 33
6.7.8 Error codes when charging refrigerant 34
6.7.9 Checks after charging refrigerant 34
6.7.10 To fix the fluorinated greenhouse gases label 34
6.8 Connecting the electrical wiring 34
6.8.1 Precautions when connecting electrical wiring 34
6.8.2 Field wiring: Overview 35
6.8.3 About the electrical wiring 35
6.8.4 Guidelines when knocking out knockout holes 36
6.8.5 To route and fix the transmission wiring 36
6.8.6 To connect the transmission wiring 36
6.8.7 To finish the transmission wiring 37
6.8.8 To route and fix the power supply 37
6.8.9 To connect the power supply 37
7 Configuration 38
7.1 Overview: Configuration 38
7.2 Making field settings 38
7.2.1 About making field settings 38
7.2.2 Field setting components 38
7.2.3 To access the field setting components 38
7.2.4 To access mode 1 or 2 39
7.2.5 To use mode 1 39
7.2.6 To use mode 2 39
7.2.7 Mode 1: Monitoring settings 40
7.2.8 Mode 2: Field settings 41
7.2.9 To connect the PC configurator to the outdoor unit 43
7.3 Energy saving and optimum operation 44
7.3.1 Available main operation methods 44
7.3.2 Available comfort settings 44
7.3.3 Example: Automatic mode during cooling 45
7.3.4 Example: Automatic mode during heating 46
7.4 Using the leak detection function 46
7.4.1 About automatic leak detection 46
7.4.2 To manually perform a leak detection 46
8 Commissioning 47
8.1 Overview: Commissioning 47
8.2 Precautions when commissioning 47
8.3 Checklist before commissioning 47
8.4 About the test run 48
8.5 To perform a test run 48
8.6 Correcting after abnormal completion of the test run 48
8.7 Operating the unit 48

9 Maintenance and service 49
9.1 Overview: Maintenance and service 49
9.2 Maintenance safety precautions 49
9.2.1 To prevent electrical hazards 49
9.3 About service mode operation 49
9.3.1 To use vacuum mode 49
9.3.2 To recover refrigerant 49

10 Troubleshooting 49
10.1 Overview: Troubleshooting 49
10.2 Solving problems based on error codes 50
10.3 Error codes: Overview 50

11 Disposal 53

12 Technical data 54
12.1 Overview: Technical data 54
12.2 Dimensions 54
12.3 Service space: Outdoor unit 55
12.4 Components: Outdoor unit 56
12.5 Components: Electrical component box 58
12.6 Piping diagram: Outdoor unit 59
12.7 Wiring diagram: Outdoor unit 61
12.8 Technical specifications: Outdoor unit 70
12.9 Capacity table: Indoor unit 72

For the user 73

13 About the system 73
13.1 System layout 73

14 User interface 73

15 Before operation 74

16 Operation 74
16.1 Operation range 74
16.2 Operating the system 74
16.2.1 About operating the system 74
16.2.2 About cooling, heating, fan only, and automatic operation 74
16.2.3 About the heating operation 74
16.2.4 To operate the system (WITHOUT cool/heat changeover remote control switch) 75
16.2.5 To operate the system (WITH cool/heat changeover remote control switch) 75
16.3 Using the dry program 75
16.3.1 About the dry program 75
16.3.2 To use the dry program (WITHOUT cool/heat changeover remote control switch) 75
16.3.3 To use the dry program (WITH cool/heat changeover remote control switch) 76
16.4 Adjusting the air flow direction 76
16.4.1 About the air flow flap 76
16.5 Setting the master user interface 76
16.5.1 About setting the master user interface 76
16.5.2 To designate the master user interface (VRV DX and Hydrobox) 76
16.6 About control systems 76

17 Energy saving and optimum operation 77
17.1 Available main operation methods 77
17.2 Available comfort settings 77

18 Maintenance and service 77
18.1 Maintenance after a long stop period 78
18.2 Maintenance before a long stop period 78
18.3 About the refrigerant 78
18.4 After-sales service and warranty 78
18.4.1 Warranty period 78
18.4.2 Recommended maintenance and inspection 78
18.4.3 Recommended maintenance and inspection cycles 79
18.4.4 Shortened maintenance and replacement cycles 79

19 Troubleshooting 79
19.1 Error codes: Overview 80
19.2 Symptoms that are NOT system malfunctions 81
19.2.1 Symptom: The system does not operate 81
19.2.2 Symptom: Cool/Heat cannot be changed over 81
19.2.3 Symptom: Fan operation is possible, but cooling and heating do not work 81
19.2.4 Symptom: The fan speed does not correspond to the setting 81
19.2.5 Symptom: The fan direction does not correspond to the setting 81
19.2.6 Symptom: White mist comes out of a unit (Indoor unit) 81
19.2.7 Symptom: White mist comes out of a unit (Indoor unit, outdoor unit) 81
19.2.8 Symptom: The user interface display reads "U4" or "U5" and stops, but then restarts after a few minutes 81
19.2.9 Symptom: Noise of air conditioners (Indoor unit) 81
19.2.10 Symptom: Noise of air conditioners (Indoor unit, outdoor unit) 81
19.2.11 Symptom: Noise of air conditioners (Outdoor unit) 81
19.2.12 Symptom: Dust comes out of the unit 81
19.2.13 Symptom: The units can give off odours 81
19.2.14 Symptom: The outdoor unit fan does not spin 81
19.2.15 Symptom: The display shows "88" 82
19.2.16 Symptom: The compressor in the outdoor unit does not stop after a short heating operation 82
19.2.17 Symptom: The inside of an outdoor unit is warm even when the unit has stopped 82
19.2.18 Symptom: Hot air can be felt when the indoor unit is stopped 82

20 Relocation 82

21 Disposal 82

22 Glossary 82

1 General safety precautions

1.1 About the documentation

- The original documentation is written in English. All other languages are translations.
- The precautions described in this document cover very important topics, follow them carefully.
- The installation of the system, and all activities described in the installation manual and the installer reference guide MUST be performed by an authorised installer.

1.1.1 Meaning of warnings and symbols

⚠	**DANGER** Indicates a situation that results in death or serious injury.
⚡	**DANGER: RISK OF ELECTROCUTION** Indicates a situation that could result in electrocution.
🔥	**DANGER: RISK OF BURNING** Indicates a situation that could result in burning because of extreme hot or cold temperatures.
💥	**DANGER: RISK OF EXPLOSION** Indicates a situation that could result in explosion.

WARNING

Indicates a situation that could result in death or serious injury.

WARNING: FLAMMABLE MATERIAL

CAUTION

Indicates a situation that could result in minor or moderate injury.

NOTICE

Indicates a situation that could result in equipment or property damage.

INFORMATION

Indicates useful tips or additional information.

Symbol	Explanation
	Before installation, read the installation and operation manual, and the wiring instruction sheet.
	Before performing maintenance and service tasks, read the service manual.
	For more information, see the installer and user reference guide.

1.2 For the user

- If you are NOT sure how to operate the unit, contact your installer.
- This appliance can be used by children aged from 8 years and above and persons with reduced physical, sensory or mental capabilities or lack of experience and knowledge if they have been given supervision or instruction concerning use of the appliance in a safe way and understand the hazards involved. Children shall NOT play with the appliance. Cleaning and user maintenance shall NOT be made by children without supervision.

WARNING

To prevent electric shocks or fire:

- Do NOT rinse the unit.
- Do NOT operate the unit with wet hands.
- Do NOT place any objects containing water on the unit.

NOTICE

- Do NOT place any objects or equipment on top of the unit.
- Do NOT sit, climb or stand on the unit.

- Units are marked with the following symbol:

This means that electrical and electronic products may NOT be mixed with unsorted household waste. Do NOT try to dismantle the system yourself: the dismantling of the system, treatment of the refrigerant, of oil and of other parts must be done by an authorized installer and must comply with applicable legislation.
Units must be treated at a specialized treatment facility for reuse, recycling and recovery. By ensuring this product is disposed of correctly, you will help to prevent potential negative consequences for the environment and human health. For more information, contact your installer or local authority.

- Batteries are marked with the following symbol:

This means that the batteries may NOT be mixed with unsorted household waste. If a chemical symbol is printed beneath the symbol, this chemical symbol means that the battery contains a heavy metal above a certain concentration.
Possible chemical symbols are: Pb: lead (>0.004%).
Waste batteries must be treated at a specialized treatment facility for reuse. By ensuring waste batteries are disposed of correctly, you will help to prevent potential negative consequences for the environment and human health.

1.3 For the installer

1.3.1 General

If you are NOT sure how to install or operate the unit, contact your dealer.

NOTICE

Improper installation or attachment of equipment or accessories could result in electric shock, short-circuit, leaks, fire or other damage to the equipment. Only use accessories, optional equipment and spare parts made or approved by Daikin.

WARNING

Make sure installation, testing and applied materials comply with applicable legislation (on top of the instructions described in the Daikin documentation).

CAUTION

Wear adequate personal protective equipment (protective gloves, safety glasses,…) when installing, maintaining or servicing the system.

WARNING

Tear apart and throw away plastic packaging bags so that nobody, especially children, can play with them. Possible risk: suffocation.

DANGER: RISK OF BURNING

- Do NOT touch the refrigerant piping, water piping or internal parts during and immediately after operation. It could be too hot or too cold. Give it time to return to normal temperature. If you must touch it, wear protective gloves.
- Do NOT touch any accidental leaking refrigerant.

WARNING

Provide adequate measures to prevent that the unit can be used as a shelter by small animals. Small animals that make contact with electrical parts can cause malfunctions, smoke or fire.

CAUTION

Do NOT touch the air inlet or aluminium fins of the unit.

NOTICE

- Do NOT place any objects or equipment on top of the unit.
- Do NOT sit, climb or stand on the unit.

NOTICE

Works executed on the outdoor unit are best done under dry weather conditions to avoid water ingress.

In accordance with the applicable legislation, it might be necessary to provide a logbook with the product containing at least: information on maintenance, repair work, results of tests, stand-by periods,…

Also, at least, following information MUST be provided at an accessible place at the product:

- Instructions for shutting down the system in case of an emergency
- Name and address of fire department, police and hospital
- Name, address and day and night telephone numbers for obtaining service

In Europe, EN378 provides the necessary guidance for this logbook.

1.3.2 Installation site

- Provide sufficient space around the unit for servicing and air circulation.
- Make sure the installation site withstands the unit's weight and vibration.
- Make sure the area is well ventilated. Do NOT block any ventilation openings.
- Make sure the unit is level.

Do NOT install the unit in the following places:

- In potentially explosive atmospheres.
- In places where there is machinery that emits electromagnetic waves. Electromagnetic waves may disturb the control system, and cause malfunction of the equipment.
- In places where there is a risk of fire due to the leakage of flammable gases (example: thinner or gasoline), carbon fibre, ignitable dust.
- In places where corrosive gas (example: sulphurous acid gas) is produced. Corrosion of copper pipes or soldered parts may cause the refrigerant to leak.

1.3.3 Refrigerant

If applicable. See the installation manual or installer reference guide of your application for more information.

NOTICE

Make sure refrigerant piping installation complies with applicable legislation. In Europe, EN378 is the applicable standard.

NOTICE

Make sure the field piping and connections are NOT subjected to stress.

WARNING

During tests, NEVER pressurize the product with a pressure higher than the maximum allowable pressure (as indicated on the nameplate of the unit).

WARNING

Take sufficient precautions in case of refrigerant leakage. If refrigerant gas leaks, ventilate the area immediately. Possible risks:

- Excessive refrigerant concentrations in a closed room can lead to oxygen deficiency.
- Toxic gas may be produced if refrigerant gas comes into contact with fire.

DANGER: RISK OF EXPLOSION

Pump down – Refrigerant leakage. If you want to pump down the system, and there is a leak in the refrigerant circuit:

- Do NOT use the unit's automatic pump down function, with which you can collect all refrigerant from the system into the outdoor unit. **Possible consequence:** Self-combustion and explosion of the compressor because of air going into the operating compressor.
- Use a separate recovery system so that the unit's compressor does NOT have to operate.

WARNING

ALWAYS recover the refrigerant. Do NOT release them directly into the environment. Use a vacuum pump to evacuate the installation.

NOTICE

After all the piping has been connected, make sure there is no gas leak. Use nitrogen to perform a gas leak detection.

NOTICE

- To avoid compressor breakdown, do NOT charge more than the specified amount of refrigerant.
- When the refrigerant system is to be opened, refrigerant MUST be treated according to the applicable legislation.

WARNING

Make sure there is no oxygen in the system. Refrigerant may only be charged after performing the leak test and the vacuum drying.

- In case re-charge is required, refer to the nameplate of the unit. It states the type of refrigerant and necessary amount.
- The unit is factory charged with refrigerant and depending on pipe sizes and pipe lengths some systems require additional charging of refrigerant.
- Only use tools exclusively for the refrigerant type used in the system, this to ensure pressure resistance and prevent foreign materials from entering into the system.
- Charge the liquid refrigerant as follows:

If	Then
A siphon tube is present (i.e., the cylinder is marked with "Liquid filling siphon attached")	Charge with the cylinder upright.
A siphon tube is NOT present	Charge with the cylinder upside down.

- Open refrigerant cylinders slowly.
- Charge the refrigerant in liquid form. Adding it in gas form may prevent normal operation.

CAUTION

When the refrigerant charging procedure is done or when pausing, close the valve of the refrigerant tank immediately. If the valve is NOT closed immediately, remaining pressure might charge additional refrigerant. **Possible consequence:** Incorrect refrigerant amount.

1.3.4 Brine

If applicable. See the installation manual or installer reference guide of your application for more information.

WARNING

The selection of the brine MUST be in accordance with the applicable legislation.

WARNING

Take sufficient precautions in case of brine leakage. If brine leaks, ventilate the area immediately and contact your local dealer.

WARNING

The ambient temperature inside the unit can get much higher than that of the room, e.g. 70°C. In case of a brine leak, hot parts inside the unit can create a hazardous situation.

WARNING

The use and installation of the application MUST comply with the safety and environmental precautions specified in the applicable legislation.

1.3.5 Water

If applicable. See the installation manual or installer reference guide of your application for more information.

NOTICE

Make sure water quality complies with EU directive 98/83 EC.

1.3.6 Electrical

DANGER: RISK OF ELECTROCUTION

- Turn OFF all power supply before removing the switch box cover, connecting electrical wiring or touching electrical parts.
- Disconnect the power supply for more than 1 minute, and measure the voltage at the terminals of main circuit capacitors or electrical components before servicing. The voltage MUST be less than 50 V DC before you can touch electrical components. For the location of the terminals, see the wiring diagram.
- Do NOT touch electrical components with wet hands.
- Do NOT leave the unit unattended when the service cover is removed.

WARNING

If NOT factory installed, a main switch or other means for disconnection, having a contact separation in all poles providing full disconnection under overvoltage category III condition, MUST be installed in the fixed wiring.

WARNING

- ONLY use copper wires.
- Make sure the field wiring complies with the applicable legislation.
- All field wiring MUST be performed in accordance with the wiring diagram supplied with the product.
- NEVER squeeze bundled cables and make sure they do NOT come in contact with the piping and sharp edges. Make sure no external pressure is applied to the terminal connections.
- Make sure to install earth wiring. Do NOT earth the unit to a utility pipe, surge absorber, or telephone earth. Incomplete earth may cause electrical shock.
- Make sure to use a dedicated power circuit. NEVER use a power supply shared by another appliance.
- Make sure to install the required fuses or circuit breakers.
- Make sure to install an earth leakage protector. Failure to do so may cause electric shock or fire.
- When installing the earth leakage protector, make sure it is compatible with the inverter (resistant to high frequency electric noise) to avoid unnecessary opening of the earth leakage protector.

NOTICE

Precautions when laying power wiring:

- Do NOT connect wiring of different thicknesses to the power terminal block (slack in the power wiring may cause abnormal heat).
- When connecting wiring which is the same thickness, do as shown in the figure above.
- For wiring, use the designated power wire and connect firmly, then secure to prevent outside pressure being exerted on the terminal board.
- Use an appropriate screwdriver for tightening the terminal screws. A screwdriver with a small head will damage the head and make proper tightening impossible.
- Over-tightening the terminal screws may break them.

Install power cables at least 1 metre away from televisions or radios to prevent interference. Depending on the radio waves, a distance of 1 metre may not be sufficient.

WARNING

- After finishing the electrical work, confirm that each electrical component and terminal inside the electrical components box is connected securely.
- Make sure all covers are closed before starting up the unit.

NOTICE

Only applicable if the power supply is three-phase, and the compressor has an ON/OFF starting method.

If there exists the possibility of reversed phase after a momentary black out and the power goes on and off while the product is operating, attach a reversed phase protection circuit locally. Running the product in reversed phase can break the compressor and other parts.

2 About the documentation

2.1 About this document

Target audience

Authorised installers + end users

INFORMATION

This appliance is intended to be used by expert or trained users in shops, in light industry and on farms, or for commercial use by lay persons.

Documentation set

This document is part of a documentation set. The complete set consists of:

- **General safety precautions:**
  - Safety instructions that you must read before installing
  - Format: Paper (in the box of the outdoor unit)
- **Outdoor unit installation and operation manual:**
  - Installation and operation instructions
  - Format: Paper (in the box of the outdoor unit)
- **Installer and user reference guide:**
  - Preparation of the installation, reference data,…
  - Detailed step-by-step instructions and background information for basic and advanced usage
  - Format: Digital files on http://www.daikineurope.com/support-and-manuals/product-information/

Latest revisions of the supplied documentation may be available on the regional Daikin website or via your dealer.

The original documentation is written in English. All other languages are translations.

Technical engineering data

- A **subset** of the latest technical data is available on the regional Daikin website (publicly accessible).
- The **full set** of latest technical data is available on the Daikin extranet (authentication required).

For the installer

3 About the box

3.1 Overview: About the box

This chapter describes what you have to do after the box with the outdoor unit is delivered on-site.

It contains information about:

- Unpacking and handling the outdoor unit
- Removing the accessories from the unit
- Removing the transportation stay

Keep the following in mind:

- At delivery, the unit MUST be checked for damage. Any damage MUST be reported immediately to the carrier's claims agent.
- Bring the packed unit as close as possible to its final installation position to prevent damage during transport.
- When handling the unit, take into account the following:

  Fragile, handle the unit with care.

  Keep the unit upright in order to avoid compressor damage.
- Prepare the path along which you want to bring the unit inside in advance.
- Lift the unit preferably with a crane and 2 belts of at least 8 m long as shown in the figure below. Always use protectors to prevent belt damage and pay attention to the position of the unit's centre of gravity.

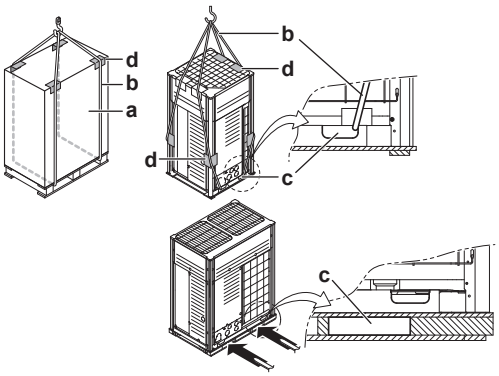

a Packaging material
b Belt sling
c Opening
d Protector

NOTICE

Use a belt sling of ≤20 mm wide that adequately bears the weight of the unit.

- A forklift can only be used for transport as long as the unit remains on its pallet as shown above.

3.2 To unpack the outdoor unit

Remove the packaging material from the unit:

- Take care not to damage the unit when removing the shrink foil with a cutter.
- Remove the 4 bolts fixing the unit to its pallet.

WARNING

Tear apart and throw away plastic packaging bags so that nobody, especially children, can play with them. Possible risk: suffocation.

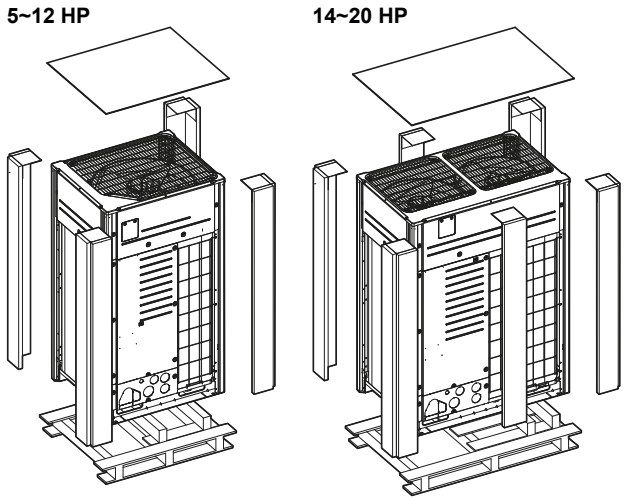

3.3 To remove the accessories from the outdoor unit

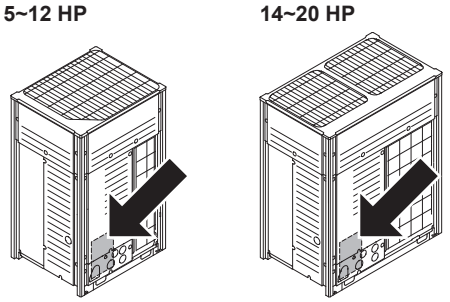

Make sure that all accessories are available in the unit.

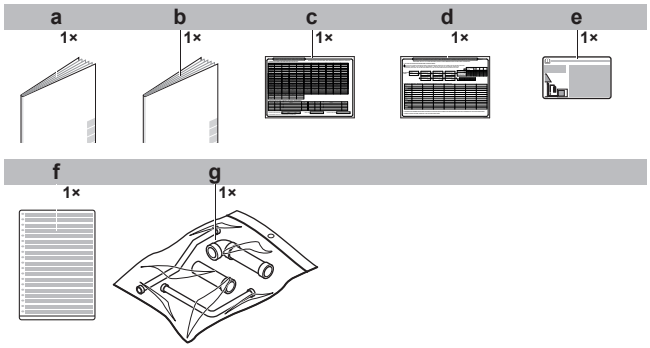

- **a** General safety precautions
- **b** Installation manual and operation manual
- **c** Additional refrigerant charge label
- **d** Installation information sticker
- **e** Fluorinated greenhouse gases label
- **f** Multilingual fluorinated greenhouse gases label
- **g** Piping accessory bag

3.4 Accessory pipes: Diameters

Accessory pipes (mm)	HP	Øa	Øb
Gas pipe	5	25.4	19.1
▪ Front connection	8		
ID Øa / ID Øb	10		22.2
	12		28.6
	14		
▪ Bottom connection	16		
ID Øa / OD Øb	18		
	20		
	18+20[(a)]	31.8	41.4
Liquid pipe	5	9.5	9.5
▪ Front connection	8		
ID Øb / ID Øa	10		
	12		12.7
	14	12.7	
	16		
▪ Bottom connection	18		15.9
ID Øb / ID Øa	20		
High pressure/low pressure gas pipe	5	19.1	15.9
	8		
▪ Front connection	10		19.1
ID Øa / ID Øb	12		
	14		22.2
	16		
▪ Bottom connection	18		
ID Øa / OD Øb	20		28.6

(a) Only in combination with the outdoor unit multi-connection piping kit.

3.5 To remove the transportation stay

Only for REMQ5 (1×) + REYQ8 (1×) + REYQ14~20 (2×)

NOTICE

If the unit is operated with the transportation stay attached, abnormal vibration or noise may be generated.

The transportation stay installed over the compressor leg for protecting the unit during transport must be removed. Proceed as shown in the figure and procedure below.

1 Slightly loosen the fixing nut (a).

2 Remove the transportation stay (b) as shown in the figure below.

3 Tighten the fixing nut (a) again.

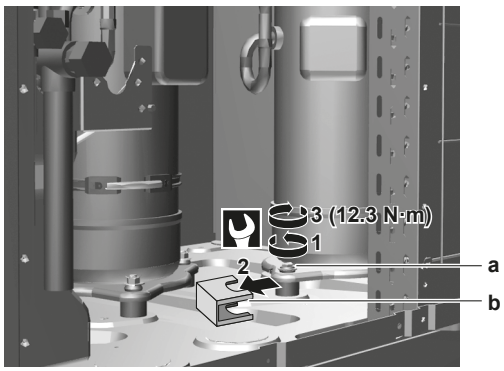

4 About the units and options

4.1 Overview: About the units and options

This chapter contains information about:

- Identification of the outdoor unit
- Where the outdoor unit fits in the system layout
- With which indoor units and options you can combine the outdoor units
- Which outdoor units have to be used as standalone units, and which outdoor units can be combined

4.2 Identification label: Outdoor unit

Location

5~12 HP

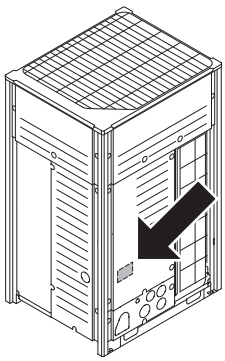

14~20 HP

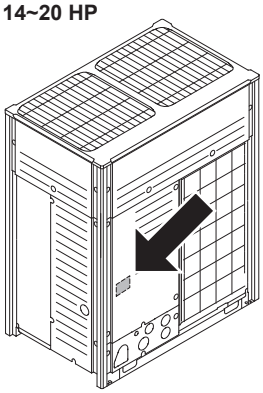

Model identification

Example: R E Y Q 18 T7 Y1 B [*]

Code	Explanation
R	Outdoor air cooled
E	Heat recovery
Y	Y=Single or multi module M=Multi module only
Q	Refrigerant R410A
18	Capacity class
T7	Model series
Y1	Power supply
B	European market
[*]	Minor model change indication

4.3 About the outdoor unit

This installation manual concerns the VRV IV, full inverter driven, heat recovery system.

Model line up:

Model	Description
REYQ8~20	Heat recovery model for single or multi-use
REMQ5	Heat recovery model for multi-use only

Depending on the type of outdoor unit which is chosen, some functionality will or will not exist. It will be indicated throughout this installation manual and brought to your attention. Certain features have exclusive model rights.

These units are intended for outdoor installation and aimed for heat pump applications including air to air and air to water applications.

These units have (in single use) heating capacities ranging from 25 to 63 kW and cooling capacities rating from 22.4 to 56 kW. In multi combination the heating capacity can go up till 168 kW and in cooling till 150 kW.

The outdoor unit is designed to work in heating mode at ambient temperatures from –20°C WB to 15.5°C WB and in cooling mode at ambient temperatures from –5°C DB to 43°C DB.

4.4 System layout

NOTICE

Design of the system must not be done at temperatures below –15°C.

INFORMATION

Not all combinations of indoor units are allowed, for guidance, see "4.5.2 Possible combinations of indoor units" on page 10.

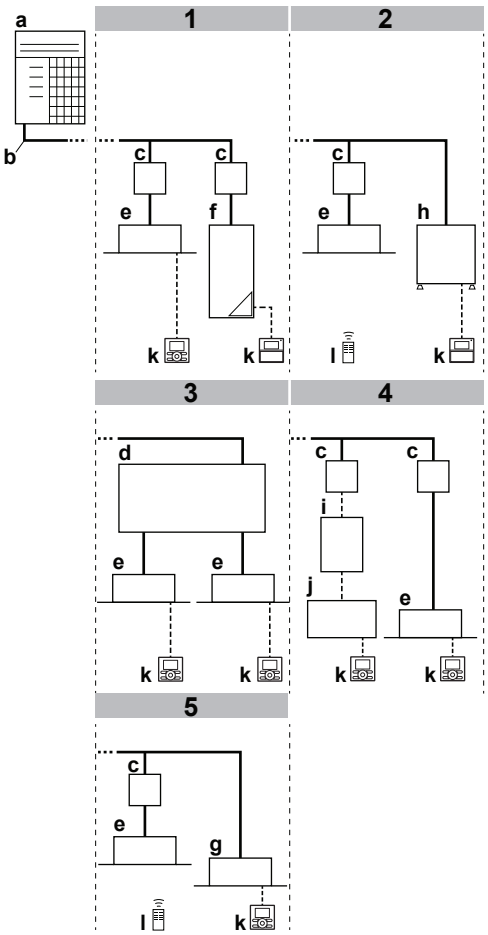

a	Outdoor unit
b	Refrigerant piping
c	BS unit
d	Multi BS unit
e	VRV DX indoor unit
f	LT Hydrobox unit
g	Cooling only VRV indoor unit
h	HT Hydrobox unit
i	EKEXV kit
j	AHU
k	User interface
l	Wireless user interface

4.5 Combining units and options

4.5.1 About combining units and options

NOTICE

To be sure your system setup (outdoor unit+indoor unit(s)) will work, you have to consult the latest technical engineering data for VRV IV heat recovery.

The VRV IV heat recovery system can be combined with several types of indoor units and is intended for R410A use only.

For an overview which units are available you can consult the product catalogue for VRV IV.

An overview is given indicating the allowed combinations of indoor units and outdoor units. Not all combinations are allowed. They are subject to rules (combination between outdoor-indoor, single outdoor unit use, multiple outdoor unit use, combinations between indoor units, etc.) mentioned in the technical engineering data.

4.5.2 Possible combinations of indoor units

In general following type of indoor units can be connected to a VRV IV heat recovery system. The list is non-exhaustive and is depending on both outdoor unit model and indoor unit model combinations.

- VRV direct expansion (DX) indoor units (air-to-air applications).
- HT (high temperature) Hydrobox (air-to-water applications): HXHD series (heating only).
- LT (low temperature) Hydrobox (air-to-water applications): HXY080/125 series.
- AHU (air-to-air applications): EKEXV-kit+EKEQM-box required, depending on the application.
- Comfort air curtain (air-to-air applications): CYVS (Biddle) series.

4.5.3 Possible combinations of outdoor units

Possible standalone outdoor units

Non-continuous heating
REYQ8
REYQ10
REYQ12
REYQ14
REYQ16
REYQ18
REYQ20

Possible standard combinations of outdoor units

- REYQ10~54 consist of 2 or 3 REYQ8~20 or REMQ5 units.
- REMQ5 units cannot be used as standalone outdoor units.

Continuous heating
REYQ10 = REMQ5 + 5
REYQ13 = REYQ8 + REMQ5
REYQ16 = REYQ8 + 8
REYQ18 = REYQ8 + 10
REYQ20 = REYQ8 + 12
REYQ22 = REYQ10 + 12
REYQ24 = REYQ8 + 16
REYQ26 = REYQ12 + 14
REYQ28 = REYQ12 + 16
REYQ30 = REYQ12 + 18
REYQ32 = REYQ16 + 16
REYQ34 = REYQ16 + 18
REYQ36 = REYQ16 + 20
REYQ38 = REYQ8 + 12 + 18
REYQ40 = REYQ10 + 12 + 18
REYQ42 = REYQ10 + 16 + 16
REYQ44 = REYQ12 + 16 + 16
REYQ46 = REYQ14 + 16 + 16
REYQ48 = REYQ16 + 16 + 16
REYQ50 = REYQ16 + 16 + 18
REYQ52 = REYQ16 + 18 + 18
REYQ54 = REYQ18 + 18 + 18

4.5.4 Possible options for the outdoor unit

INFORMATION

Refer to the technical engineering data for the latest option names.

Refrigerant branching kit

Description	Model name
Refnet header	KHRQ23M29H
	KHRQ23M64H
	KHRQ23M75H
Refnet joint	KHRQ23M20T
	KHRQ23M29T9
	KHRQ23M64T
	KHRQ23M75T

For the selection of the optimal branching kit, please refer to "5.3.3 To select refrigerant branch kits" on page 15.

Outdoor multi connection piping kit

Number of outdoor units	Model name
2	BHFQ23P907
3	BHFQ23P1357

PC configurator cable (EKPCCAB)

For VRV IV heat recovery system it is also possible to make several commissioning field settings through a personal computer interface. For this option EKPCCAB is required which is a dedicated cable to communicate with the outdoor unit. The user interface software is available on http://www.daikineurope.com/support-and-manuals/software-downloads/.

Heater tape kit

To keep the drain holes free in cold climates with high humidity, you can install a heater tape kit.

Description	Model name
Heater tape kit for 5~12 HP	EKBPH012T
Heater tape kit for 14~20 HP	EKBPH020T

See also: "5.2.2 Additional installation site requirements of the outdoor unit in cold climates" on page 12.

Demand PCB (EKRP1AHTA)

To enable the power saving consumption control by digital inputs you must install the demand PCB.

For installation instructions, see the installation manual of the demand PCB and addendum book for optional equipment.

5 Preparation

5.1 Overview: Preparation

This chapter describes what you have to do and know before going on-site.

It contains information about:

- Preparing the installation site
- Preparing the electrical wiring

5.2 Preparing the installation site

5.2.1 Installation site requirements of the outdoor unit

- Provide sufficient space around the unit for servicing and air circulation.
- Make sure the installation site withstands the unit's weight and vibration.
- Make sure the area is well ventilated. Do NOT block any ventilation openings.
- Make sure the unit is level.
- Select a place where rain can be avoided as much as possible.
- Select the location of the unit in such a way that the sound generated by the unit does not disturb anyone, and the location is selected according the applicable legislation.

Do NOT install the unit in the following places:

- In potentially explosive atmospheres.
- In places where there is machinery that emits electromagnetic waves. Electromagnetic waves may disturb the control system, and cause malfunction of the equipment.
- In places where there is a risk of fire due to the leakage of flammable gases (example: thinner or gasoline), carbon fibre, ignitable dust.
- In places where corrosive gas (example: sulphurous acid gas) is produced. Corrosion of copper pipes or soldered parts may cause the refrigerant to leak.
- In places where a mineral oil mist, spray or vapour may be present in the atmosphere. Plastic parts may deteriorate and fall off or cause water leakage.

NOTICE

This is a class A product. In a domestic environment this product may cause radio interference in which case the user may be required to take adequate measures.

NOTICE

The equipment described in this manual may cause electronic noise generated from radio-frequency energy. The equipment complies to specifications that are designed to provide reasonable protection against such interference. However, there is no guarantee that interference will not occur in a particular installation.

It is therefore recommended to install the equipment and electric wires keeping proper distances away from stereo equipment, personal computers, etc.

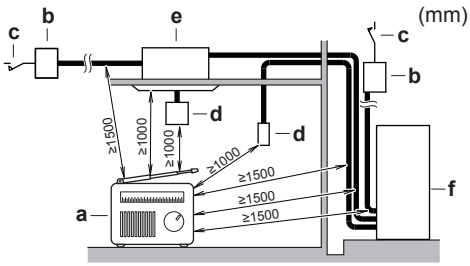

a	Personal computer or radio
b	Fuse
c	Earth leakage protector
d	User interface
e	Indoor unit
f	Outdoor unit

In places with weak reception, keep distances of 3 m or more to avoid electromagnetic disturbance of other equipment and use conduit tubes for power and transmission lines.

CAUTION

Appliance not accessible to the general public, install it in a secured area, protected from easy access.

This unit, both indoor and outdoor, is suitable for installation in a commercial and light industrial environment.

- When installing, take strong winds, typhoons or earthquakes into account, improper installation may result in the unit turning over.

- Take care that in the event of a water leak, water cannot cause any damage to the installation space and surroundings.
- When installing the unit in a small room, take measures in order to keep the refrigerant concentration from exceeding allowable safety limits in the event of a refrigerant leak, refer to "About safety against refrigerant leaks" on page 13.

CAUTION

Excessive refrigerant concentrations in a closed room can lead to oxygen deficiency.

- Be sure that the air inlet of the unit is not positioned towards the main wind direction. Frontal wind will disturb the operation of the unit. If necessary, use a screen to block the wind.
- Ensure that water cannot cause any damage to the location by adding water drains to the foundation and prevent water traps in the construction.

Seaside installation. Make sure the outdoor unit is NOT directly exposed to sea winds. This is to prevent corrosion caused by high levels of salt in the air, which might shorten the life of the unit.

Install the outdoor unit away from direct sea winds.

Example: Behind the building.

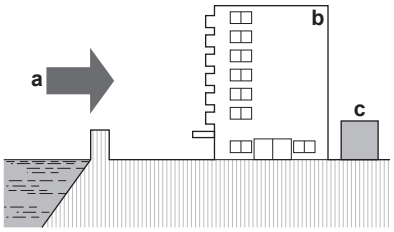

If the outdoor unit is exposed to direct sea winds, install a windbreaker.

- Height of windbreaker≥1.5×height of outdoor unit
- Mind the service space requirements when installing the windbreaker.

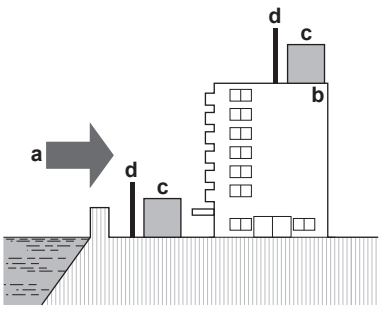

a Sea wind
b Building
c Outdoor unit
d Windbreaker

5.2.2 Additional installation site requirements of the outdoor unit in cold climates

NOTICE

When operating the unit in a low outdoor ambient temperature, be sure to follow the instructions described below.

- To prevent exposure to wind and snow, install a baffle plate on the air side of the outdoor unit:

In heavy snowfall areas it is very important to select an installation site where the snow will NOT affect the unit. If lateral snowfall is possible, make sure that the heat exchanger coil is NOT affected by the snow. If necessary, install a snow cover or shed and a pedestal.

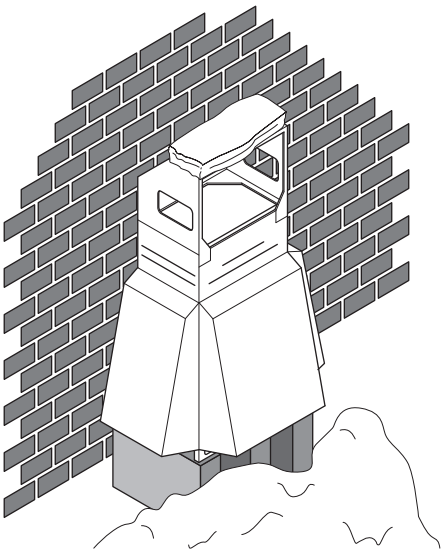

INFORMATION

For instructions on how to install the snow cover, contact your dealer.

NOTICE

When installing the snow cover, do NOT obstruct the air flow of the unit.

NOTICE

When operating the unit in a low outdoor ambient temperature with high humidity conditions, make sure to take precautions to keep the drain holes of the unit free by using proper equipment.

In heating:

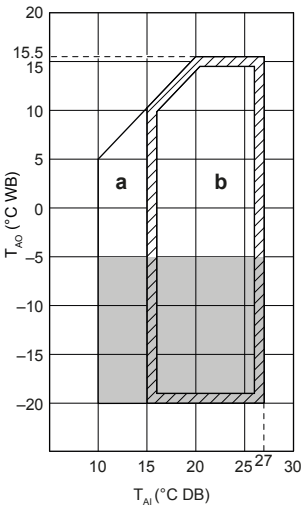

a Warming up operation range

b Operation range

T_{AI} Ambient indoor temperature

T_{AO} Ambient outdoor temperature

If the unit has to operate for 5 days in this area with high humidity (>90%), Daikin recommends to install the optional heater tape kit (EKBPH012T or EKBPH020T) to keep the drain holes free.

5.2.3 Securing safety against refrigerant leaks

About safety against refrigerant leaks

The installer and system specialist shall secure safety against leakage according to local regulations or standards. The following standards may be applicable if local regulations are not available.

This system uses R410A as refrigerant. R410A itself is an entirely safe non-toxic, non-combustible refrigerant. Nevertheless care must be taken to ensure that the system is installed in a room which is sufficiently large. This assures that the maximum concentration level of refrigerant gas is not exceeded, in the unlikely event of major leak in the system and this in accordance to the local applicable regulations and standards.

About the maximum concentration level

The maximum charge of refrigerant and the calculation of the maximum concentration of refrigerant is directly related to the humanly occupied space in to which it could leak.

The unit of measurement of the concentration is kg/m^3 (the weight in kg of the refrigerant gas in 1 m^3 volume of the occupied space).

Compliance to the local applicable regulations and standards for the maximum allowable concentration level is required.

According to the appropriate European Standard, the maximum allowed concentration level of refrigerant to a humanly space for R410A is limited to 0.44 kg/m^3.

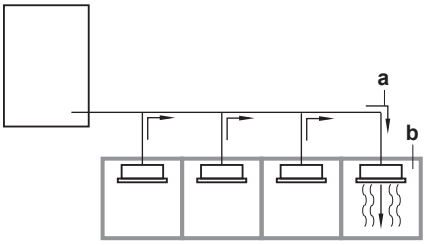

a Direction of the refrigerant flow
b Room where refrigerant leak has occurred (outflow of all the refrigerant from the system)

Pay special attention to places, such as basements etc., where refrigerant can stay, since refrigerant is heavier than air.

To check the maximum concentration level

Check the maximum concentration level in accordance with steps 1 to 4 below and take whatever action is necessary to comply.

1 Calculate the amount of refrigerant (kg) charged to each system separately.

Formula	A+B=C
A	Amount of refrigerant in a single unit system (amount of refrigerant with which the system is charged before leaving the factory)
B	Additional charging amount (amount of refrigerant added locally)
C	Total amount of refrigerant (kg) in the system

NOTICE

Where a single refrigerant facility is divided into 2 entirely independent refrigerant systems, use the amount of refrigerant with which each separate system is charged.

2 Calculate the volume of the room (m^3) where the indoor unit is installed. In a case such as the following, calculate the volume of (D), (E) as a single room or as the smallest room.

D	When there are no smaller room divisions: 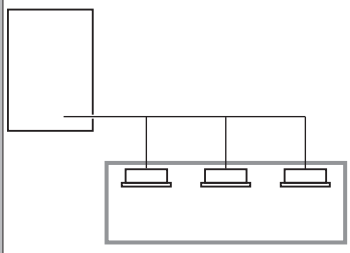
E	When there is a room division that has an opening sufficiently large to permit free air flow. 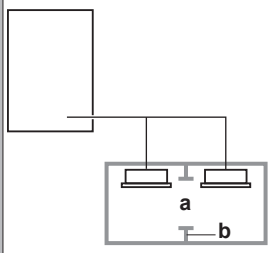 **a** Opening between the rooms. In case there is a door the openings above and below the door each must be equivalent in size to 0.15% or more of the floor area. **b** Room division

3 Calculate the refrigerant density using the results of the calculations in steps 1 and 2 above. If the result of the above calculation exceeds the maximum concentration level, a ventilation opening to the adjacent room shall be made.

Formula	F/G≤H
F	Total volume of refrigerant in the refrigerant system
G	Size (m^3) of smallest room in which there is an indoor unit installed
H	Maximum concentration level (kg/m^3)

4 Calculate the refrigerant density taking the volume of the room where the indoor unit is installed and the adjacent room. Install ventilation openings in the door of adjacent rooms until the refrigerant density is smaller than the maximum concentration level.

5.3 Preparing refrigerant piping

5.3.1 Refrigerant piping requirements

NOTICE

The refrigerant R410A requires strict cautions for keeping the system clean, dry and tight.

- Clean and dry: foreign materials (including mineral oils or moisture) should be prevented from getting mixed into the system.
- Tight: R410A does not contain any chlorine, does not destroy the ozone layer, and does not reduce earth's protection against harmful ultraviolet radiation. R410A can contribute slightly to the greenhouse effect if it is released. Therefore pay special attention to check the tightness of the installation.

NOTICE

The piping and other pressure-containing parts shall be suitable for refrigerant. Use phosphoric acid deoxidised seamless copper for refrigerant.

- Foreign materials inside pipes (including oils for fabrication) must be ≤30 mg/10 m.

- Temper grade: use piping with temper grade in function of the pipe diameter as listed in table below.

Pipe Ø	Temper grade of piping material
≤15.9 mm	O (annealed)
≥19.1 mm	1/2H (half hard)

- All piping lengths and distances have been taken into consideration (see "5.3.4 About the piping length" on page 15).

Only use phosphoric acid deoxidised seamless copper.

5.3.2 To select the piping size

Determine the proper size using the following tables and reference figure (only for indication).

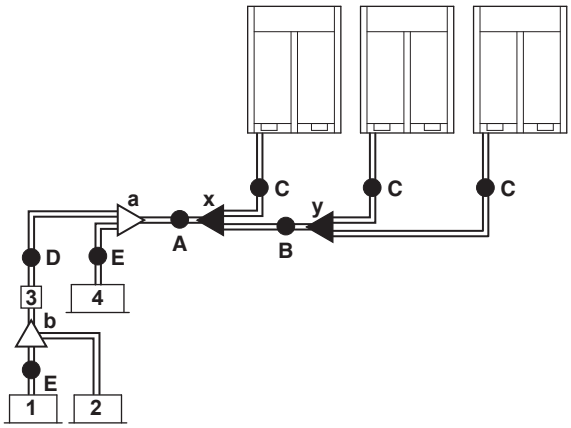

1,2 VRV DX indoor unit
3 BS unit
4 Cooling-only VRV indoor unit
A~E Piping
a,b Indoor branch kit
x,y Outdoor multi connection kit

A, B, C: Piping between outdoor unit and (first) refrigerant branch kit

Choose from the following table in accordance with the outdoor unit total capacity type, connected downstream.

Outdoor unit capacity type (HP)	Piping outer diameter size (mm)		
	Liquid pipe	Suction gas pipe	High pressure/low pressure gas pipe
5~8	9.5	19.1	15.9
10	9.5	22.2	19.1
12	12.7	28.6	19.1
14~16	12.7	28.6	22.2
18	15.9	28.6	22.2
20~22	15.9	28.6	28.6
24	15.9	34.9	28.6
26~34	19.1	34.9	28.6
36	19.1	41.3	28.6
38~54	19.1	41.3	34.9

D: Piping between refrigerant branch kits or refrigerant branch kit and BS unit

Choose from the following table in accordance with the indoor unit total capacity type, connected downstream. Do not let the connection piping exceed the refrigerant piping size chosen by the general system model name.

Indoor unit capacity index	Piping outer diameter size (mm)		
	Liquid pipe	Suction gas pipe	High pressure/low pressure gas pipe
<150	9.5	15.9	12.7
150≤x<200		19.1	15.9
200≤x<290		22.2	19.1
290≤x<420	12.7	28.6	
420≤x<640	15.9		28.6
640≤x<920	19.1	34.9	
≥920		41.3	

Example:

- Downstream capacity for E=[capacity index of unit 1]
- Downstream capacity for D=[capacity index of unit 1]+[capacity index of unit 2]

E: Piping between refrigerant branch kit or BS unit and indoor unit

Pipe size for direct connection to indoor unit must be the same as the connection size of the indoor unit (in case indoor unit is VRV DX indoor or Hydrobox).

Indoor unit capacity index	Piping outer diameter size (mm)	
	Gas pipe	Liquid pipe
15~50	12.7	6.4
63~140	15.9	9.5
200	19.1	
250	22.2	

- If a size-up of the piping is required, refer to the table below.

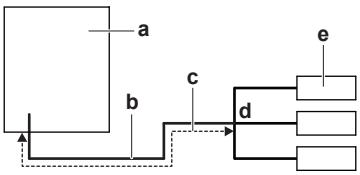

a Outdoor unit
b Main pipes
c Increase
d First refrigerant branch kit
e Indoor unit

Size up	
HP class	Liquid piping outer diameter size (mm)
5~8	9.5 → 12.7
10	
12+14	12.7 → 15.9
16	
18~22	15.9 → 19.1
24	
26~34	19.1 → 22.2
36~54	

- The pipe thickness of the refrigerant piping shall comply with the applicable legislation. The minimal pipe thickness for R410A piping must be in accordance with the table below.

Pipe Ø (mm)	Minimal thickness t (mm)
6.4/9.5/12.7	0.80
15.9	0.99
19.1/22.2	0.80
28.6	0.99

Pipe Ø (mm)	Minimal thickness t (mm)
34.9	1.21
41.3	1.43

- In case the required pipe sizes (inch sizes) are not available, it is also allowed to use other diameters (mm sizes), taken the following into account:
  - Select the pipe size nearest to the required size.
  - Use the suitable adapters for the change-over from inch to mm pipes (field supply).
  - The additional refrigerant calculation has to be adjusted as mentioned in "6.7.3 To determine the additional refrigerant amount" on page 28.

5.3.3 To select refrigerant branch kits

Refrigerant refnets

For piping example, refer to "5.3.2 To select the piping size" on page 14.

- When using refnet joints at the first branch counted from the outdoor unit side, choose from the following table in accordance with the capacity of the outdoor unit (example: refnet joint a).

Outdoor unit capacity type (HP)	3 pipes
8~10	KHRQ23M29T9
12~22	KHRQ23M64T
24~54	KHRQ23M75T

- For refnet joints other than the first branch (example refnet joint b), select the proper branch kit model based on the total capacity index of all indoor units connected after the refrigerant branch.

Indoor unit capacity index	3 pipes
<200	KHRQ23M20T
200≤x<290	KHRQ23M29T9
290≤x<640	KHRQ23M64T
≥640	KHRQ23M75T

- Concerning refnet headers, choose from the following table in accordance with the total capacity of all the indoor units connected below the refnet header.

Indoor unit capacity index	3 pipes
<200	KHRQ23M29H
200≤x<290	
290≤x<640	KHRQ23M64H[(a)]
≥640	KHRQ23M75H

(a) If the pipe size above the refnet header is Ø34.9 or more, KHRQ23M75H is required.

INFORMATION

Maximum 8 branches can be connected to a header.

- How to choose an outdoor multi connection piping kit. Choose from the following table in accordance with the number of outdoor units.

Number of outdoor units	Branch kit name
2	BHFQ23P907
3	BHFQ23P1357

INFORMATION

Reducers or T-joints are field supplied.

NOTICE

Refrigerant branch kits can only be used with R410A.

5.3.4 About the piping length

Make sure the piping installation does not exceed the maximum allowable pipe length, the allowable level difference, and the allowable length after branching. To illustrate the piping length requirements, 6 cases are discussed in the chapters below. They describe both standard and non-standard outdoor unit combinations with VRV DX indoor units, Hydrobox units and/or air handling units (AHU).

Definitions

Term	Definition
Actual piping length	Pipe length between outdoor and indoor units
Equivalent piping length	Pipe length between outdoor and indoor units, including the equivalent length of the piping accessories
Total piping length	Total piping length, from the outdoor to all indoor units

Equivalent length of the piping accessories

Accessory	Equivalent length
Refnet joint	0.5 m
Refnet header	1 m
Single BS1Q100~160	4 m
Single BS1Q25	6 m
Multi BS4~16Q14	4 m

Allowable height difference

Term	Definition	Height difference (m)
H1	Height difference between outdoor and indoor units	50/40[(b)]
H2	Height difference between indoor units	15 30[(a)]
H3	Height difference between outdoor units	5
H4	Height difference between EKEXV-kits and AHU units.	5

(a) If single outdoor units or standard multi-outdoor combinations >20 HP are connected to only VRV DX indoor units, then the height difference between indoor units (= H2) can be increased from 15 to 30 m. However, this limits the allowable maximum length of the longest pipe (see "Connection with only VRV DX indoor units" on page 16).

(b) The allowable height difference is 50 m in case the outdoor unit is positioned higher than the indoor unit, and 40 m in case the outdoor unit is positioned lower than the indoor unit. If only VRV DX indoor units are used, the allowable height difference between outdoor and indoor units may be extended to 90 m, without the need of an additional option kit. In this case, make sure all conditions below are met:

If	Then
The outdoor unit is positioned higher than the indoor units	▪ Minimum connection ratio: 80% ▪ Size up the liquid piping (refer to "5.3.2 To select the piping size" on page 14 for more information) ▪ Activate the outdoor unit setting. Refer to the service manual for more information.
The outdoor unit is positioned lower than the indoor units	▪ Minimum connection ratio varies according to the height difference between outdoor and indoor units: ▪ 40~60 m: 80% ▪ 60~65 m: 90% ▪ 65~80 m: 100% ▪ 80~90 m: 110% ▪ Size up the liquid piping (refer to "5.3.2 To select the piping size" on page 14 for more information) ▪ Activate the outdoor unit setting. Refer to the service manual for more information. ▪ No technical cooling

5.3.5 Single outdoor units and standard multi-outdoor-unit combinations >20 HP

Connection with only VRV DX indoor units

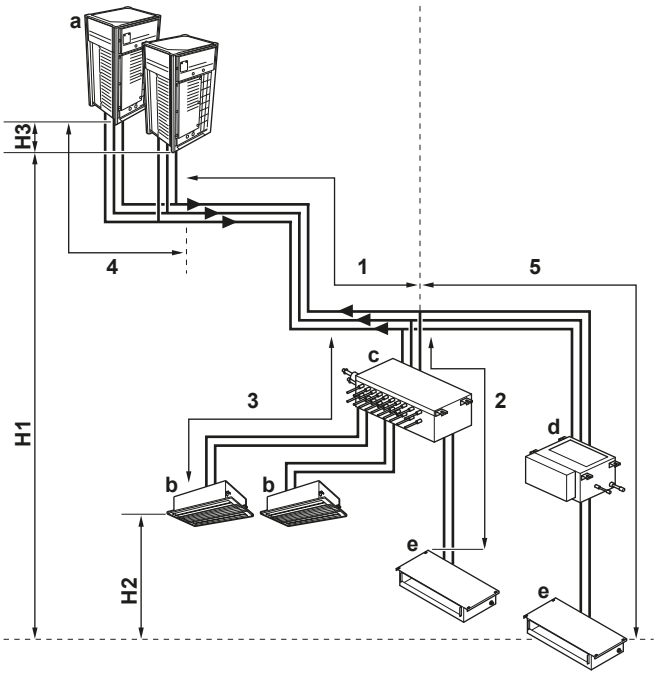

a Outdoor unit
b VRV DX indoor unit
c Multi BS unit
d BS unit
e VRV DX indoor unit

Pipe	Maximum length (actual/ equivalent)
Longest pipe from the outdoor unit or the last multi-outdoor piping branch (1+2, 1+3, 1+5)	165 m/190 m[(a)] 120 m/165 m[(b)]
Longest pipe after the first branch (2, 3, 5)	40 m/—[(c)]
In case of a multi-outdoor setup: longest pipe from the outdoor unit to the last multi-outdoor piping branch (4)	10 m/13 m
Total pipe length	1000 m/—

(a) If the equivalent piping length is more than 90 m, size up the main liquid piping according to "5.3.2 To select the piping size" on page 14.
(b) If the height difference between indoor units (= H2) is between 15 and 30 m, then the allowable maximum length of the longest pipe is limited to 120/165 m (actual/ equivalent).
(c) An extension up to 90 m is possible if all of the following conditions are met:

1 In case of BS1Q units, the piping length between all indoor units and the nearest branch kit is ≤40 m.
2 In case of multi BS units, the piping length between all indoor units and the multi BS unit is ≤40 m.
3 It is required to size up the liquid piping between the first branch kit and the last. Beware that in contrast to multi BS units, BS1Q units are NOT considered branch kits. If the increased pipe size is larger than the pipe size of the main pipe, also increase the size of the main pipe.
4 After sizing up the liquid piping (previous condition), double its length in the calculation of the total piping length. Make sure the total piping length is within limitations.
5 The piping length difference between the nearest indoor unit to the outdoor unit and the farthest indoor unit to the outdoor unit is ≤40 m.

Connection with VRV DX indoor units and Hydrobox units

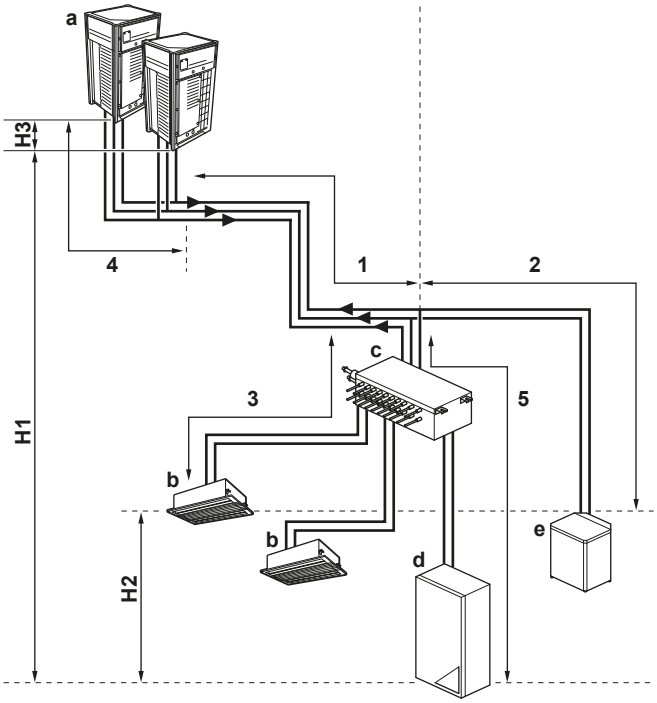

a Outdoor unit
b VRV DX indoor unit
c Multi BS unit
d LT Hydrobox unit
e HT Hydrobox unit

Pipe	Maximum length (actual/ equivalent)
Longest pipe from the outdoor unit or the last multi-outdoor piping branch (1+2, 1+3, 1+5)	135 m/160 m[(a)]
Longest pipe after the first branch (2, 3, 5)	40 m
In case of a multi-outdoor setup: longest pipe from the outdoor unit to the last multi-outdoor piping branch (4)	10 m/13 m
Total pipe length	300 m/600 m[(b)]

(a) If the equivalent piping length is more than 90 m, size up the main liquid piping according to "5.3.2 To select the piping size" on page 14.
(b) In this case, both are actual piping lengths: outdoor units ≤20 HP / outdoor units >20 HP.

Connection with VRV DX indoor units and air handling units

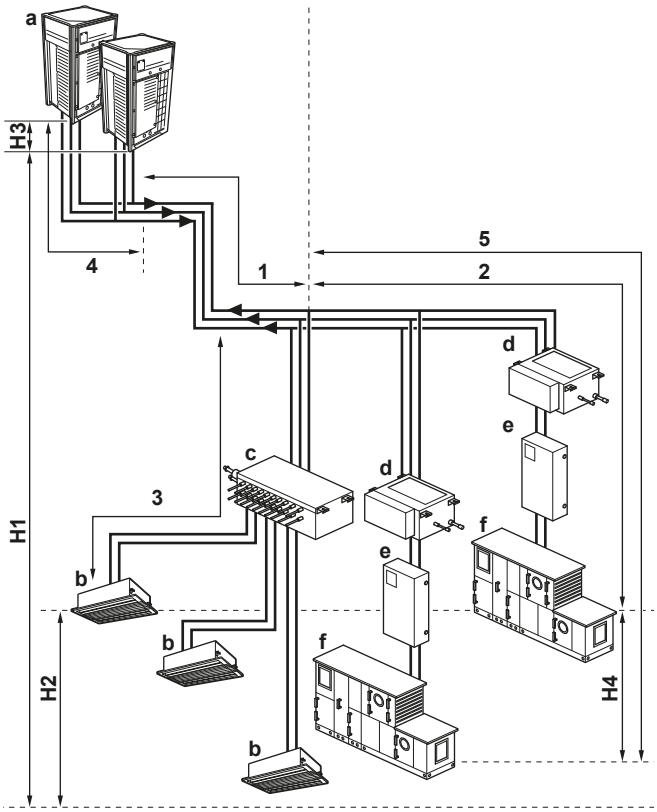

a Outdoor unit
b VRV DX indoor unit
c Multi BS unit
d BS unit
e EKEXV kit
f AHU

Pipe	Maximum length (actual/ equivalent)
Longest pipe from the outdoor unit or the last multi-outdoor piping branch (1+2, 1+3, 1+5)	165 m/190 m[(a)]
Longest pipe after the first branch (2, 3, 5)	40 m/—
In case of a multi-outdoor setup: longest pipe from the outdoor unit to the last multi-outdoor piping branch (4)	10 m/13 m
Total pipe length	1000 m/—

(a) If the equivalent piping length is more than 90 m, size up the main liquid piping according to "5.3.2 To select the piping size" on page 14.

5.3.6 Standard multi-outdoor-unit combinations ≤20 HP and free multi-outdoor-unit combinations

Connection with only VRV DX indoor units

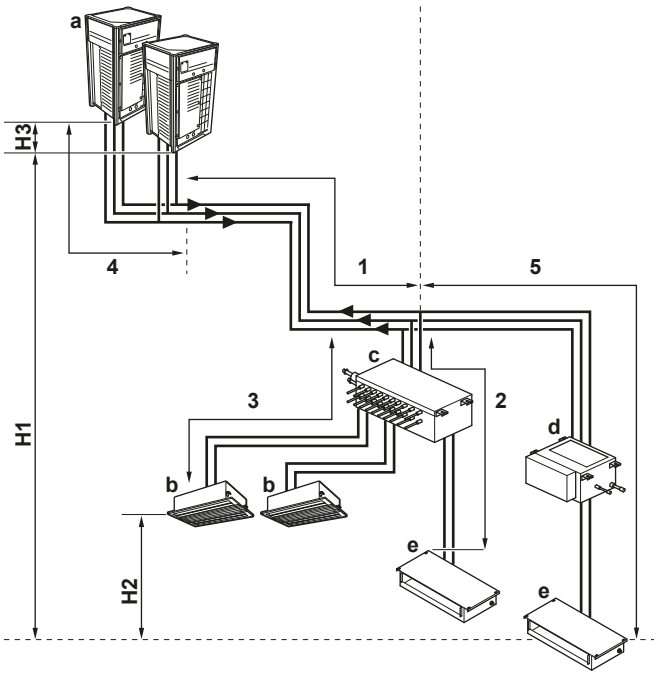

a Outdoor unit
b VRV DX indoor unit
c Multi BS unit
d BS unit
e VRV DX indoor unit

Pipe	Maximum length (actual/ equivalent)
Longest pipe from the outdoor unit or the last multi-outdoor piping branch (1+2, 1+3, 1+5)	135 m/160 m[(a)]
Longest pipe after the first branch (2, 3, 5)	40 m/—[(b)]
In case of a multi-outdoor setup: longest pipe from the outdoor unit to the last multi-outdoor piping branch (4)	10 m/13 m
Total pipe length	500 m/—

(a) If the equivalent piping length is more than 90 m, size up the main liquid piping according to "5.3.2 To select the piping size" on page 14.

(b) An extension up to 90 m is possible if all of the following conditions are met:

1 In case of BS1Q units, the piping length between all indoor units and the nearest branch kit is ≤40 m.

2 In case of multi BS units, the piping length between all indoor units and the multi BS unit is ≤40 m.

3 It is required to size up the liquid piping between the first branch kit and the last. Beware that in contrast to multi BS units, BS1Q units are NOT considered branch kits. If the increased pipe size is larger than the pipe size of the main pipe, also increase the size of the main pipe.

4 After sizing up the liquid piping (previous condition), double its length in the calculation of the total piping length. Make sure the total piping length is within limitations.

5 The piping length difference between the nearest indoor unit to the outdoor unit and the farthest indoor unit to the outdoor unit is ≤40 m.

Connection with VRV DX indoor units and Hydrobox units

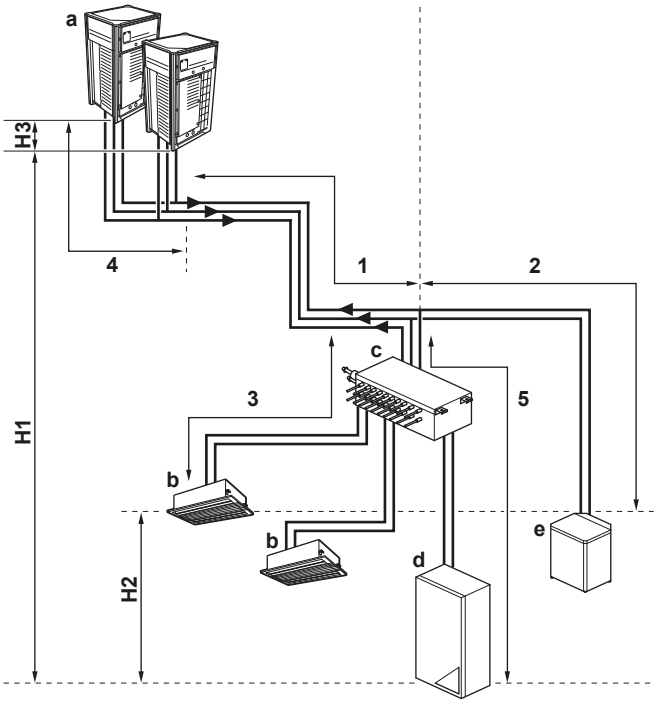

a Outdoor unit
b VRV DX indoor unit
c Multi BS unit
d LT Hydrobox unit
e HT Hydrobox unit

Pipe	Maximum length (actual/ equivalent)
Longest pipe from the outdoor unit or the last multi-outdoor piping branch (1+2, 1+3, 1+5)	135 m/160 m[(a)]
Longest pipe after the first branch (2, 3, 5)	40 m/—
In case of a multi-outdoor setup: longest pipe from the outdoor unit to the last multi-outdoor piping branch (4)	10 m/13 m
Total pipe length	300 m/500 m[(b)]

(a) If the equivalent piping length is more than 90 m, size up the main liquid piping according to "5.3.2 To select the piping size" on page 14.

(b) In this case, both are actual piping lengths: outdoor units ≤20 HP / outdoor units >20 HP.

Connection with VRV DX indoor units and air handling units

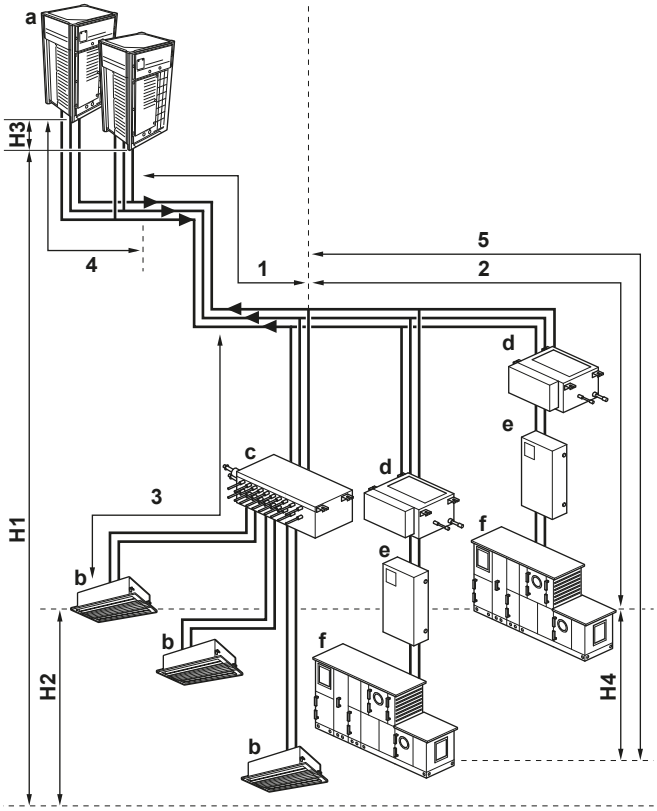

a Outdoor unit
b VRV DX indoor unit
c Multi BS unit
d BS unit
e EKEXV kit
f AHU

Pipe	Maximum length (actual/ equivalent)
Longest pipe from the outdoor unit or the last multi-outdoor piping branch (1+2, 1+3, 1+5)	135 m/160 m[(a)]
Longest pipe after the first branch (2, 3, 5)	40 m/—
In case of a multi-outdoor setup: longest pipe from the outdoor unit to the last multi-outdoor piping branch (4)	10 m/13 m
Total pipe length	500 m/—

(a) If the equivalent piping length is more than 90 m, size up the main liquid piping according to "5.3.2 To select the piping size" on page 14.

5.3.7 Multiple outdoor units: Possible layouts

- The piping between the outdoor units must be routed level or slightly upward to avoid the risk of oil retention into the piping.

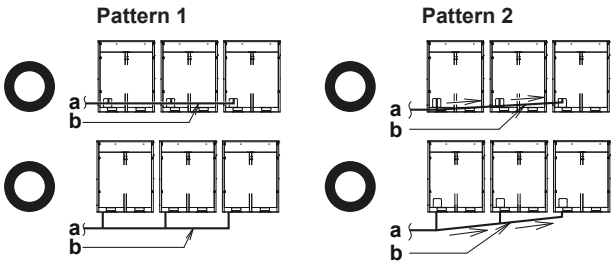

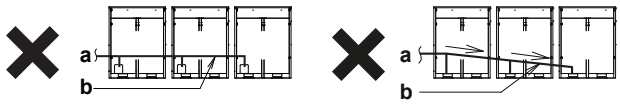

- **a** To indoor unit
- **b** Piping between outdoor units
- **X** Not allowed (oil remains in piping)
- **O** Allowed

- To avoid the risk of oil retention to the outmost outdoor unit, always connect the stop valve and the piping between outdoor units as shown in the 4 correct possibilities of the figure below.

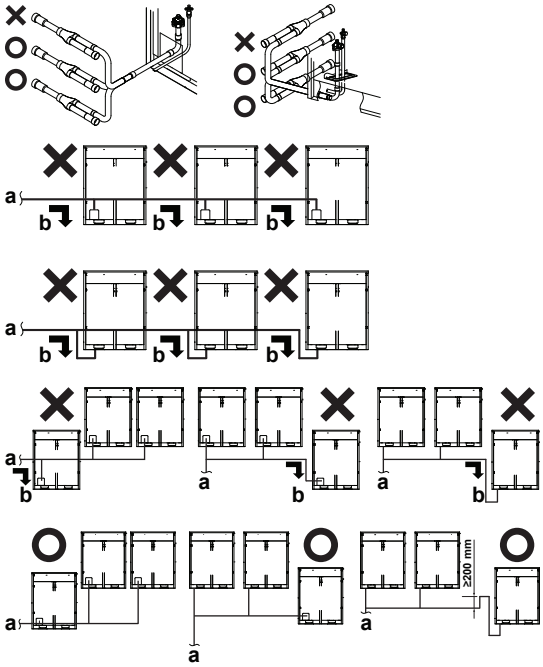

- **a** To indoor unit
- **b** Oil collects to the outmost outdoor unit when the system stops
- **X** Not allowed
- **O** Allowed

- If the piping length between the outdoor units exceeds 2 m, create a rise of 200 mm or more in the suction gas line and the high pressure/low pressure gas line within a length of 2 m from the kit.

If	Then
≤2 m	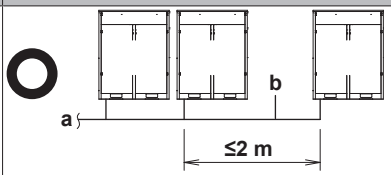
>2 m	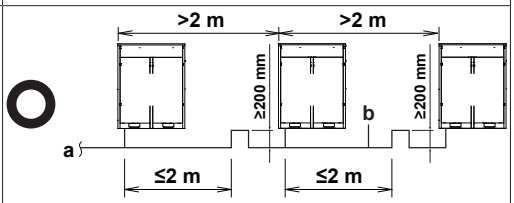

- **a** To indoor unit
- **b** Piping between outdoor units

NOTICE

There are restrictions on the refrigerant pipe connection order between outdoor units during installation in case of a multiple outdoor unit system. Install according to following restrictions. The capacities of outdoor units A, B and C must fulfill the following restriction conditions: A≥B≥C.

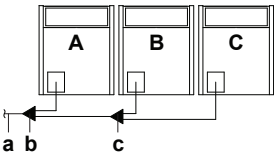

a To indoor units

b Outdoor unit multi connecting piping kit (first branch)

c Outdoor unit multi connecting piping kit (second branch)

5.4 Preparing electrical wiring

5.4.1 About electrical compliance

This equipment complies with:

- **EN/IEC 61000-3-11** provided that the system impedance Z_{sys} is less than or equal to Z_{max} at the interface point between the user's supply and the public system.
  - EN/IEC 61000-3-11 = European/International Technical Standard setting the limits for voltage changes, voltage fluctuations and flicker in public low-voltage supply systems for equipment with rated current ≤75 A.
  - It is the responsibility of the installer or user of the equipment to ensure, by consultation with the distribution network operator if necessary, that the equipment is connected only to a supply with a system impedance Z_{sys} less than or equal to Z_{max}.
- **EN/IEC 61000-3-12** provided that the short-circuit power S_{sc} is greater than or equal to the minimum S_{sc} value at the interface point between the user's supply and the public system.
  - EN/IEC 61000-3-12 = European/International Technical Standard setting the limits for harmonic currents produced by equipment connected to public low-voltage systems with input current >16 A and ≤75 A per phase.
  - It is the responsibility of the installer or user of the equipment to ensure, by consultation with the distribution network operator if necessary, that the equipment is connected only to a supply with a short-circuit power S_{sc} greater than or equal to the minimum S_{sc} value.

Non-continuous heating		
Model	**Z_{max}(Ω)**	**Minimum S_{sc} value (kVA)**
REMQ5	—	1216
REYQ8	—	1216
REYQ10	—	564
REYQ12	—	615
REYQ14	—	917
REYQ16	—	924
REYQ18	—	873
REYQ20	—	970

Continuous heating		
Model	**Z_{max}(Ω)**	**Minimum S_{sc} value (kVA)**
REYQ10	—	2432
REYQ13	—	2432
REYQ16	—	2432

Continuous heating		
Model	$Z_{max}(\Omega)$	Minimum S_{sc} value (kVA)
REYQ18	—	1780
REYQ20	—	1831
REYQ22	—	1179
REYQ24	—	2140
REYQ26	—	1532
REYQ28	—	1539
REYQ30	—	1488
REYQ32	—	1848
REYQ34	—	1797
REYQ36	—	1894
REYQ38	—	2704
REYQ40	—	2052
REYQ42	—	2412
REYQ44	—	2463
REYQ46	—	2765
REYQ48	—	2772
REYQ50	—	2721
REYQ52	—	2670
REYQ54	—	2619

INFORMATION

Multi units are standard combinations.

5.4.2 Safety device requirements

The power supply must be protected with the required safety devices, i.e. a main switch, a slow blow fuse on each phase and an earth leakage protector in accordance with the applicable legislation.

For standard combinations

Selection and sizing of the wiring should be done in accordance with the applicable legislation based on the information mentioned in the table below.

INFORMATION

Multi units are standard combinations.

Non-continuous heating		
Model	Minimum circuit ampacity	Recommended fuses
REMQ5	16.1 A	20 A
REYQ8	16.1 A	20 A
REYQ10	22.0 A	25 A
REYQ12	24.0 A	32 A
REYQ14	27.0 A	32 A
REYQ16	31.0 A	40 A
REYQ18	35.0 A	40 A
REYQ20	39.0 A	50 A

Continuous heating		
Model	Minimum circuit ampacity	Recommended fuses
REYQ10	30.0 A	40 A
REYQ13	30.0 A	40 A
REYQ16	30.0 A	40 A
REYQ18	37.0 A	50 A

Continuous heating		
Model	Minimum circuit ampacity	Recommended fuses
REYQ20	39.0 A	50 A
REYQ22	46.0 A	63 A
REYQ24	46.0 A	63 A
REYQ26	51.0 A	63 A
REYQ28	55.0 A	63 A
REYQ30	59.0 A	80 A
REYQ32	62.0 A	80 A
REYQ34	66.0 A	80 A
REYQ36	70.0 A	80 A
REYQ38	74.0 A	100 A
REYQ40	81.0 A	100 A
REYQ42	84.0 A	100 A
REYQ44	86.0 A	100 A
REYQ46	89.0 A	100 A
REYQ48	93.0 A	125 A
REYQ50	97.0 A	125 A
REYQ52	101.0 A	125 A
REYQ54	105.0 A	125 A

For all models:

- Phase and frequency: 3N~ 50 Hz
- Voltage: 380~415 V
- Transmission line section: 0.75~1.25 mm^2, maximum length is 1000 m. If the total transmission wiring exceeds these limits, it may result in communication error.

For non-standard combinations

Calculate the recommended fuse capacity.

Formula	Calculate, by adding the minimum circuit amps of each used unit (according to the table above), multiply the result by 1.1 and select the next higher recommended fuse capacity.
Example	Combining the REYQ30 by using the REYQ8, REYQ10, and REYQ12. ▪ Minimum circuit ampacity of the REYQ8=16.1 A ▪ Minimum circuit ampacity of the REYQ10=22.0 A ▪ Minimum circuit ampacity of the REYQ12=24.0 A Accordingly, the minimum circuit ampacity of the REYQ30=16.1+22.0+24.0=62.1 A Multiply the above result by 1.1 ⇒ (62.1 A×1.1)=68.3 A, so the recommended fuse capacity would be **80 A**.

NOTICE

When using residual current operated circuit breakers, be sure to use a high-speed type 300 mA rated residual operating current.

6 Installation

6.1 Overview: Installation

This chapter describes what you have to do and know on-site to install the system.

Typical workflow

Installation typically consists of the following stages:

1 Mounting the outdoor unit
2 Connecting the refrigerant piping
3 Checking the refrigerant piping
4 Insulating the refrigerant piping
5 Charging refrigerant
6 Connecting the electrical wiring

6.2 Opening the units

6.2.1 To open the outdoor unit

DANGER: RISK OF ELECTROCUTION

DANGER: RISK OF BURNING

To gain access to the unit, front plates need to be opened as follows:

5~12 HP

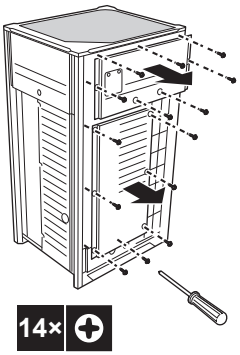

14~20 HP

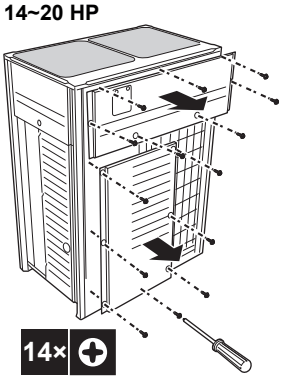

Once the front plates open, the electrical component box can be accessed. See "6.2.2 To open the electrical component box of the outdoor unit" on page 21.

For service purposes, the pushbuttons on the main PCB need to be accessed. To access these pushbuttons, the electrical component box cover does not need to be opened. See "7.2.3 To access the field setting components" on page 38.

6.2.2 To open the electrical component box of the outdoor unit

NOTICE

Do NOT apply excessive force when opening the electronic component box cover. Excessive force can deform the cover, resulting in entering of water to cause equipment failure.

5~12 HP

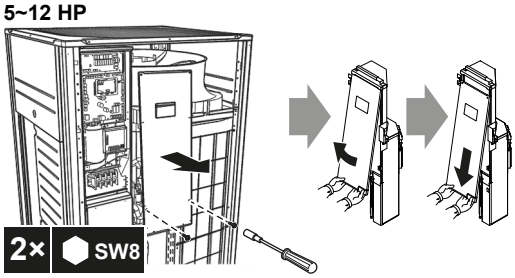

14~20 HP

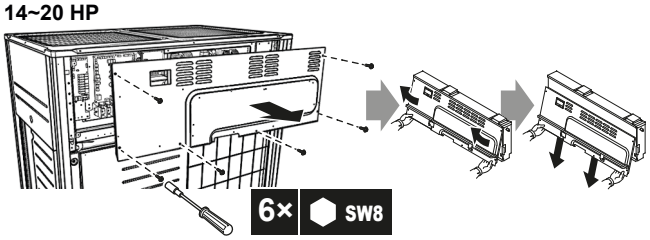

NOTICE

When closing the electrical component box cover, make sure that the sealing material on the lower back side of the cover is NOT caught and bend towards the inside.

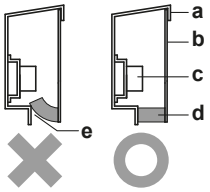

a Electrical component box cover

b Front side

c Power supply terminal block

d Sealing material

e Moisture and dirt could enter

X Not allowed

O Allowed

6.3 Mounting the outdoor unit

6.3.1 To provide the installation structure

Make sure the unit is installed level on a sufficiently strong base to prevent vibration and noise.

NOTICE

- When the installation height of the unit needs to be increased, do NOT use stands to only support the corners.
- Stands under the unit must be at least 100 mm wide.

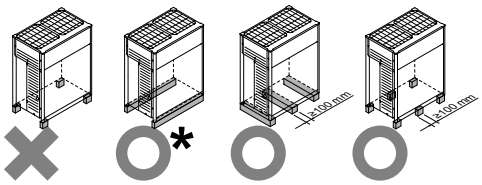

X Not allowed
O Allowed (* = preferred installation)

- The height of the foundation must at least be 150 mm from the floor. In heavy snowfall areas, this height should be increased, depending on the installation place and condition.
- The preferred installation is on a solid longitudinal foundation (steel beam frame or concrete). The foundation must be larger than the grey marked area.

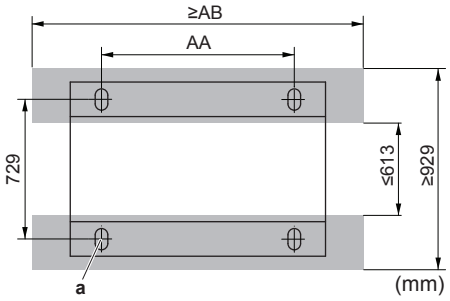

Minimum foundation
a Anchor point (4×)

HP	AA	AB
5~12	766	992
14~20	1076	1302

- Fasten the unit in place using four foundation bolts M12. It is best to screw in the foundation bolts until their length remains 20 mm above the foundation surface.

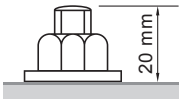

NOTICE

- Prepare a water drainage channel around the foundation to drain waste water from around the unit. During heating operation and when the outdoor temperatures are negative, the drained water from the outdoor unit will freeze up. If the water drainage is not taken care of, the area around the unit might be very slippery.
- When installed in a corrosive environment, use a nut with plastic washer (a) to protect the nut tightening part from rust.

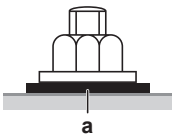

6.4 Connecting the refrigerant piping

6.4.1 Precautions when connecting the refrigerant piping

NOTICE

Make sure refrigerant piping installation complies with applicable legislation. In Europe, EN378 is the applicable standard.

NOTICE

Make sure the field piping and connections are NOT subjected to stress.

WARNING

During tests, NEVER pressurize the product with a pressure higher than the maximum allowable pressure (as indicated on the nameplate of the unit).

WARNING

Take sufficient precautions in case of refrigerant leakage. If refrigerant gas leaks, ventilate the area immediately. Possible risks:

- Excessive refrigerant concentrations in a closed room can lead to oxygen deficiency.
- Toxic gas may be produced if refrigerant gas comes into contact with fire.

WARNING

ALWAYS recover the refrigerant. Do NOT release them directly into the environment. Use a vacuum pump to evacuate the installation.

Only use phosphoric acid deoxidised seamless copper.

NOTICE

After all the piping has been connected, make sure there is no gas leak. Use nitrogen to perform a gas leak detection.

6.4.2 About connecting the refrigerant piping

Before connecting the refrigerant piping, make sure the outdoor and indoor units are mounted.

Connecting the refrigerant piping involves:

- Routing and connecting the refrigerant piping to the outdoor unit
- Protecting the outdoor unit against contamination
- Connecting the refrigerant piping to the indoor units (see the installation manual of the indoor units)
- Connecting the multi-connection piping kit
- Connecting the refrigerant branching kit
- Keeping in mind the guidelines for:
  - Brazing
  - Using the stop valves
  - Removing the pinched pipes

6.4.3 To route the refrigerant piping

Installation of refrigerant piping is possible as front connection or side connection (when taken out from the bottom) as shown in the figure below.

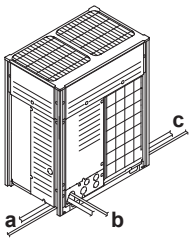

a Left-side connection
b Front connection
c Right-side connection

For side connections, the knockout hole on the bottom plate should be removed:

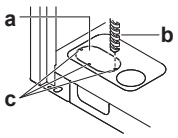

a Large knockout hole
b Drill
c Points for drilling

NOTICE

Precautions when making knockout holes:

- Avoid damaging the casing.
- After making the knockout holes, we recommend you remove the burrs and paint the edges and areas around the edges using repair paint to prevent rusting.
- When passing electrical wiring through the knockout holes, wrap the wiring with protective tape to prevent damage.

6.4.4 To connect the refrigerant piping to the outdoor unit

INFORMATION

All local inter unit piping are field supplied except the accessory pipes.

NOTICE

Precautions when connecting field piping. Add brazing material as shown in the figure.

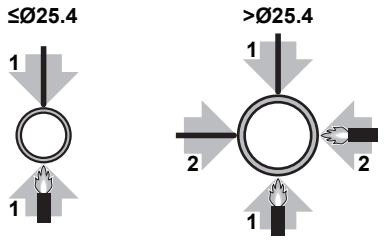

NOTICE

- Be sure to use the supplied accessory pipes when carrying out piping work in the field.
- Be sure that the field installed piping does not touch other pipes, the bottom panel or side panel. Especially for the bottom and side connection, be sure to protect the piping with suitable insulation, to prevent it from coming into contact with the casing.

Connect the stop valves to the field piping using the accessory pipes supplied with the unit.

The connections to the branch kits are the responsibility of the installer (field piping).

6.4.5 To connect the multi connection piping kit

NOTICE

Improper installation may lead to malfunction of the outdoor unit.

- Install the joints horizontally, so that the caution label (a) attached to the joint comes to the top.
  - Do not tilt the joint more than 7.5° (see view A).
  - Do not install the joint vertically (see view B).

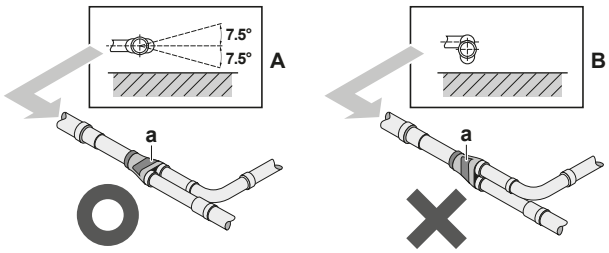

a Caution label
X Not allowed
O Allowed

- Make sure that the total length of the piping connected to the joint is absolute straight for more than 500 mm. Only if a straight field piping of more than 120 mm is connected, more than 500 mm of straight section can be ensured.

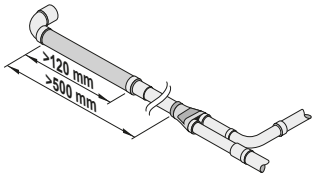

6.4.6 Multiple outdoor units: Knockout holes

Connection	Description
Front connection	Remove the front plate knockout holes to connect. 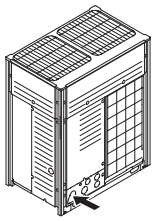
Bottom connection	Remove the knockout holes on the bottom frame and route the piping under the bottom. 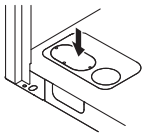

6.4.7 To connect the refrigerant branching kit

For installation of the refrigerant branching kit, refer to the installation manual delivered with the kit.

- Mount the refnet joint so that it branches either horizontally or vertically.
- Mount the refnet header so that it branches horizontally.

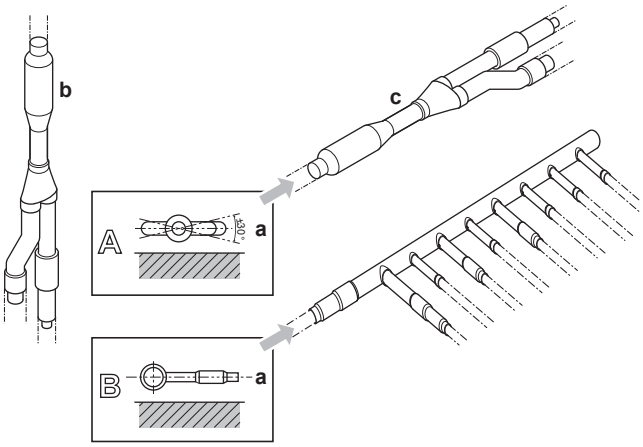

a Horizontal surface
b Refnet joint mounted vertically
c Refnet joint mounted horizontally

6.4.8 To protect against contamination

Protect the piping as described in the following table to prevent dirt, liquid or dust from entering the piping.

Unit	Installation period	Protection method
Outdoor unit	>1 month	Pinch the pipe
	<1 month	Pinch or tape the pipe
Indoor unit	Regardless of the period	

Seal the piping and wiring intake holes using sealing material (field supply), otherwise the capacity of the unit will drop and small animals may enter the machine.

Example: passing piping out through the front.

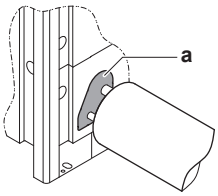

a Close the areas marked with "". (When the piping is routed from the front panel.)

- Only use clean pipes.
- Hold the pipe end downwards when removing burrs.
- Cover the pipe end when inserting it through a wall, to prevent dust and/or particles entering the pipe.

6.4.9 To braze the pipe end

NOTICE

Precautions when connecting field piping. Add brazing material as shown in the figure.

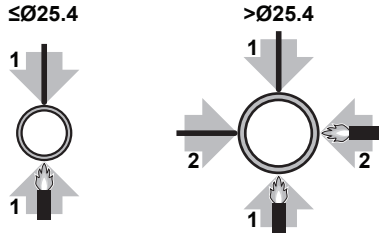

- When brazing, blow through with nitrogen to prevent creation of large quantities of oxidised film on the inside of the piping. This film adversely affects valves and compressors in the refrigerating system and prevents proper operation.
- Set the nitrogen pressure to 20 kPa (0.2 bar) (just enough so it can be felt on the skin) with a pressure-reducing valve.

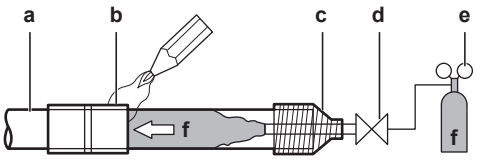

a Refrigerant piping
b Part to be brazed
c Taping
d Manual valve
e Pressure-reducing valve
f Nitrogen

- Do NOT use anti-oxidants when brazing pipe joints.
  Residue can clog pipes and break equipment.
- Do NOT use flux when brazing copper-to-copper refrigerant piping. Use phosphor copper brazing filler alloy (BCuP), which does not require flux.
  Flux has an extremely harmful influence on refrigerant piping systems. For instance, if chlorine based flux is used, it will cause pipe corrosion or, in particular, if the flux contains fluorine, it will deteriorate the refrigerant oil.

6.4.10 Using the stop valve and service port

To handle the stop valve

- Make sure to keep all stop valves open during operation.
- The figure below shows the name of each part required in handling the stop valve.
- The stop valve is factory closed.

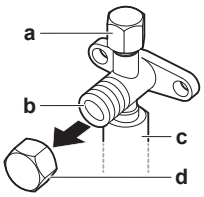

a Service port and service port cover
b Stop valve
c Field piping connection
d Stop valve cover

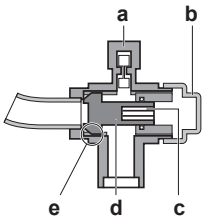

a Service port
b Stop valve cover
c Hexagon hole
d Shaft
e Seal

To open the stop valve

1. Remove the stop valve cover.
2. Insert a hexagon wrench into the stop valve and turn the stop valve counterclockwise.
3. When the stop valve cannot be turned any further, stop turning.

Result: The valve is now open.

To fully open the Ø19.1 mm~Ø25.4 mm stop valve, turn the hexagonal wrench until a torque between 27 and 33 N•m is achieved.

Inadequate torque may cause leakage of refrigerant and breakage of the stop valve cap.

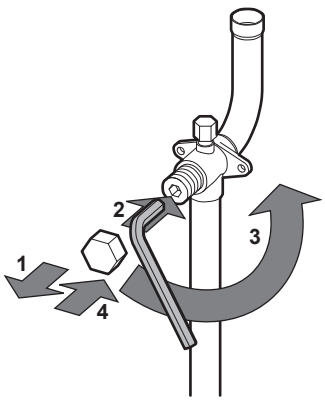

NOTICE

Pay attention that mentioned torque range is applicable for opening Ø19.1~Ø25.4 mm stop valves only.

To close the stop valve

1. Remove the stop valve cover.

2 Insert a hexagon wrench into the stop valve and turn the stop valve clockwise.

3 When the stop valve cannot be turned any further, stop turning.

Result: The valve is now closed.

Closing direction:

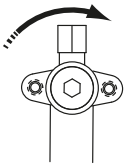

To handle the stop valve cover

- The stop valve cover is sealed where indicated by the arrow. Do NOT damage it.
- After handling the stop valve, tighten the stop valve cover securely, and check for refrigerant leaks. For the tightening torque, refer to the table below.

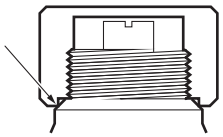

To handle the service port

- Always use a charge hose equipped with a valve depressor pin, since the service port is a Schrader type valve.
- After handling the service port, make sure to tighten the service port cover securely. For the tightening torque, refer to the table below.
- Check for refrigerant leaks after tightening the service port cover.

Tightening torques

Stop valve size (mm)	Tightening torque N•m (turn clockwise to close)			
	Shaft			
	Valve body	Hexagonal wrench	Cap (valve lid)	Service port
Ø9.5	5.4~6.6	4 mm	13.5~16.5	11.5~13.9
Ø12.7	8.1~9.9		18.0~22.0	
Ø15.9	13.5~16.5	6 mm	23.0~27.0	
Ø19.1	27.0~33.0	8 mm	22.5~27.5	
Ø25.4				

6.4.11 To remove the pinched pipes

WARNING

Any gas or oil remaining inside the stop valve may blow off the pinched piping.

Failure to observe the instructions in procedure below properly may result in property damage or personal injury, which may be serious depending on the circumstances.

Use the following procedure to remove the pinched piping:

1 Remove the valve cover and make sure that the stop valves are fully closed.

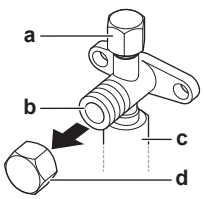

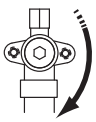

a Service port and service port cover
b Stop valve
c Field piping connection
d Stop valve cover

2 Connect the vacuuming/recovery unit through a manifold to the service port of all stop valves.

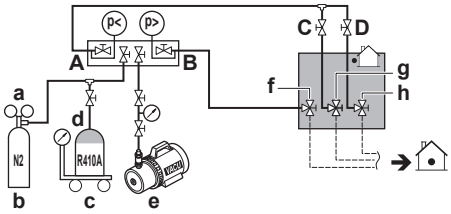

a Pressure reducing valve
b Nitrogen
c Weighing scales
d Refrigerant R410A tank (siphon system)
e Vacuum pump
f Liquid line stop valve
g Gas line stop valve
h High pressure/low pressure gas line stop valve
A Valve A
B Valve B
C Valve C
D Valve D

3 Recover gas and oil from the pinched piping by using a recovery unit.

CAUTION

Do not vent gases into the atmosphere.

4 When all gas and oil is recovered from the pinched piping, disconnect the charge hose and close the service ports

5 Cut off the lower part of the liquid-, gas-, and high pressure/low pressure gas stop valve pipes along the black line. Use an appropriate tool (e.g. a pipe cutter, a pair of nippers).

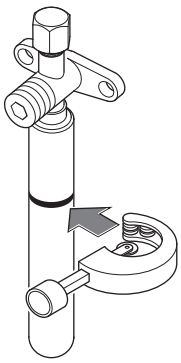

WARNING

Never remove the pinched piping by brazing.

Any gas or oil remaining inside the stop valve may blow off the pinched piping.

6 Wait until all oil is dripped out before continuing with the connection of the field piping in case the recovery was not complete.

6.5 Checking the refrigerant piping

6.5.1 About checking the refrigerant piping

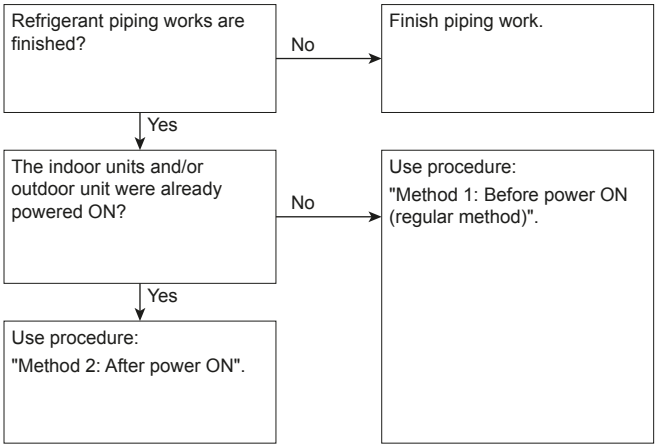

It is very important that all refrigerant piping work is done before the units (outdoor or indoor) are powered on.

When the units are powered on, the expansion valves will initialise. This means that they will close. Leak test and vacuum drying of field piping and indoor units is impossible when this happens.

Therefore, there will be explained 2 methods for initial installation, leak test and vacuum drying.

Method 1: Before power ON

If the system has not yet been powered on, no special action is required to perform the leak test and the vacuum drying.

Method 2: After power ON

If the system has already been powered on, activate setting [2-21] (refer to "7.2.4 To access mode 1 or 2" on page 39). This setting will open field expansion valves to guarantee a R410A piping pathway and make it possible to perform the leak test and the vacuum drying.

NOTICE

Make sure that all indoor units connected to the outdoor unit are powered on.

NOTICE

Wait until the outdoor unit has finished the initialisation to apply setting [2-21].

Leak test and vacuum drying

Checking the refrigerant piping involves:

- Checking for any leakages in the refrigerant piping.
- Performing vacuum drying to remove all moisture, air or nitrogen in the refrigerant piping.

If there is a possibility of moisture being present in the refrigerant piping (for example, water may have entered the piping), first carry out the vacuum drying procedure below until all moisture has been removed.

All piping inside the unit has been factory tested for leaks.

Only field installed refrigerant piping needs to be checked. Therefore, make sure that all the outdoor unit stop valves are firmly closed before performing leak test or vacuum drying.

NOTICE

Make sure that all (field supplied) field piping valves are OPEN (not outdoor unit stop valves!) before you start leak test and vacuuming.

For more information on the state of the valves, refer to "6.5.3 Checking refrigerant piping: Setup" on page 26.

6.5.2 Checking refrigerant piping: General guidelines

Connect the vacuum pump through a manifold to the service port of all stop valves to increase efficiency (refer to "6.5.3 Checking refrigerant piping: Setup" on page 26).

NOTICE

Use a 2-stage vacuum pump with a non-return valve or a solenoid valve that can evacuate to a gauge pressure of –100.7 kPa (−1.007 bar)(5 Torr absolute).

NOTICE

Make sure the pump oil does not flow oppositely into the system while the pump is not working.

NOTICE

Do not purge the air with refrigerants. Use a vacuum pump to evacuate the installation.

6.5.3 Checking refrigerant piping: Setup

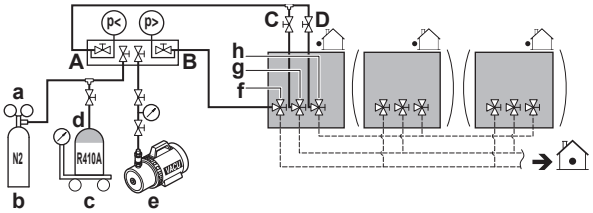

a	Pressure reducing valve
b	Nitrogen
c	Weighing scales
d	Refrigerant R410A tank (siphon system)
e	Vacuum pump
f	Liquid line stop valve
g	Gas line stop valve
h	High pressure/low pressure gas line stop valve
A	Valve A
B	Valve B
C	Valve C
D	Valve D

Valve	State of valve
Valve A	Open
Valve B	Open
Valve C	Open
Valve D	Open
Liquid line stop valve	Close
Gas line stop valve	Close
High pressure/low pressure gas line stop valve	Close

NOTICE

The connections to the indoor units and all indoor units should also be leak and vacuum tested. Keep any possible (field supplied) field piping valves open as well.

Refer to the indoor unit installation manual for more details. Leak test and vacuum drying should be done before the power supply is set to the unit. If not, see also the flow chart earlier described in this chapter (see "6.5.1 About checking the refrigerant piping" on page 26).

6.5.4 To perform a leak test

The leak test must satisfy the specifications of EN378-2.

To check for leaks: Vacuum leak test

1. Evacuate the system from the liquid and gas piping to –100.7 kPa (–1.007 bar)(5 Torr absolute) for more than 2 hours.
2. Once reached, turn off the vacuum pump and check that the pressure does not rise for at least 1 minute.
3. Should the pressure rise, the system may either contain moisture (see vacuum drying below) or have leaks.

To check for leaks: Pressure leak test

1. Break the vacuum by pressurising with nitrogen gas to a minimum gauge pressure of 0.2 MPa (2 bar). Never set the gauge pressure higher than the maximum operation pressure of the unit, i.e. 4.0 MPa (40 bar).
2. Test for leaks by applying a bubble test solution to all piping connections.
3. Discharge all nitrogen gas.

NOTICE

Make sure to use a recommended bubble test solution from your wholesaler. Do not use soap water, which may cause cracking of flare nuts (soap water may contain salt, which absorbs moisture that will freeze when the piping gets cold), and/or lead to corrosion of flared joints (soap water may contain ammonia which causes a corrosive effect between the brass flare nut and the copper flare).

6.5.5 To perform vacuum drying

NOTICE

The connections to the indoor units and all indoor units should also be leak and vacuum tested. Keep, if existing, all (field supplied) field valves to the indoor units open as well.

Leak test and vacuum drying should be done before the power supply is set to the unit. If not, see "6.5.1 About checking the refrigerant piping" on page 26 for more information.

To remove all moisture from the system, proceed as follows:

1. Evacuate the system for at least 2 hours to a target vacuum of –100.7 kPa (–1.007 bar)(5 Torr absolute).
2. Check that, with the vacuum pump turned off, the target vacuum is maintained for at least 1 hour.
3. Should you fail to reach the target vacuum within 2 hours or maintain the vacuum for 1 hour, the system may contain too much moisture. In that case, break the vacuum by pressurising with nitrogen gas to a gauge pressure of 0.05 MPa (0.5 bar) and repeat steps 1 to 3 until all moisture has been removed.
4. Depending on whether you want to immediately charge refrigerant through the refrigerant charge port or first pre-charge a portion of refrigerant through the liquid line, either open the outdoor unit stop valves, or keep them closed. See "6.7.2 About charging refrigerant" on page 28 for more information.

INFORMATION

After opening the stop valve, it is possible that the pressure in the refrigerant piping does NOT increase. This might be caused by e.g. the closed state of the expansion valve in the outdoor unit circuit, but does NOT present any problem for correct operation of the unit.

6.6 To insulate the refrigerant piping

After finishing the leak test and vacuum drying, the piping must be insulated. Take into account the following points:

- Make sure to insulate the connection piping and refrigerant branch kits entirely.
- Be sure to insulate the liquid and gas piping (for all units).
- Use heat resistant polyethylene foam which can withstand a temperature of 70°C for liquid piping and polyethylene foam which can withstand a temperature of 120°C for gas piping.
- Reinforce the insulation on the refrigerant piping according to the installation environment.

Ambient temperature	Humidity	Minimum thickness
≤30°C	75% to 80% RH	15 mm
>30°C	≥80% RH	20 mm

Condensation might form on the surface of the insulation.

- If there is a possibility that condensation on the stop valve might drip down into the indoor unit through gaps in the insulation and piping because the outdoor unit is located higher than the indoor unit, this must be prevented by sealing up the connections. See below figure.

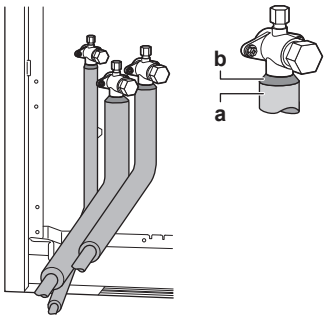

a Insulation material
b Caulking etc.

6.7 Charging refrigerant

6.7.1 Precautions when charging refrigerant

WARNING

- Only use R410A as refrigerant. Other substances may cause explosions and accidents.
- R410A contains fluorinated greenhouse gases. Its global warming potential (GWP) value is 2087.5. Do NOT vent these gases into the atmosphere.
- When charging refrigerant, always use protective gloves and safety glasses.

NOTICE

If the power of some units is turned off, the charging procedure cannot be finished properly.

NOTICE

In case of a multiple outdoor system, turn on the power of all outdoor units.

NOTICE

Be sure to turn on the power 6 hours before operation in order to have power running to the crankcase heater and to protect the compressor.

NOTICE

If operation is performed within 12 minutes after the indoor and outdoor units are turned on, the compressor will not operate before the communication is established in a correct way between outdoor unit(s) and indoor units.

NOTICE

Before starting charging procedures, check if the 7-segment display indication of the outdoor unit A1P PCB is as normal (see "7.2.4 To access mode 1 or 2" on page 39). If a malfunction code is present, see "10.2 Solving problems based on error codes" on page 50.

NOTICE

Make sure all connected indoor units are recognised (see [1-10] and [1-39] in "7.2.7 Mode 1: Monitoring settings" on page 40).

NOTICE

Close the front panel before any refrigerant charge operation is executed. Without the front panel attached the unit cannot judge correctly whether it is operating properly or not.

NOTICE

In case of maintenance and the system (outdoor unit+field piping+indoor units) does not contain any refrigerant any more (e.g., after refrigerant reclaim operation), the unit has to be charged with its original amount of refrigerant (refer to the nameplate on the unit) by pre-charging before the automatic charging function can be started.

6.7.2 About charging refrigerant

Once vacuum drying is finished, additional refrigerant charging can start.

There are two methods to charge additional refrigerant.

Method	See
Automatic charge	"6.7.6 Step 6a: To automatically charge refrigerant" on page 32
Manual charge	"6.7.7 Step 6b: To manually charge refrigerant" on page 33

INFORMATION

Adding refrigerant using the automatic refrigerant charging function is not possible when Hydrobox units are connected to the system.

To speed up the refrigerant charging process, it is in case of larger systems recommended to first pre-charge a portion of refrigerant through the liquid line before proceeding with the actual automatic or manual charging. This step is included in below procedure (see "6.7.5 To charge refrigerant" on page 31). It can be skipped, but charging will take longer then.

A flow chart is available which gives an overview of the possibilities and actions to be taken (see "6.7.4 To charge refrigerant: Flow chart" on page 29).

6.7.3 To determine the additional refrigerant amount

INFORMATION

For final charge adjustment in the test laboratory, please contact your local dealer.

NOTICE

The refrigerant charge of the system must be less than 100 kg. This means that in case the calculated total refrigerant charge is equal to or more than 95 kg you must divide your multiple outdoor system into smaller independent systems, each containing less than 95 kg refrigerant charge. For factory charge, refer to the unit name plate.

Formula:

$R=[(X_1\times\mathbf{Ø22.2})\times0.37+(X_2\times\mathbf{Ø19.1})\times0.26+(X_3\times\mathbf{Ø15.9})\times0.18+(X_4\times\mathbf{Ø12.7})\times0.12+(X_5\times\mathbf{Ø9.5})\times0.059+(X_6\times\mathbf{Ø6.4})\times0.022]\times1.04+(A+B+C)$

R	Additional refrigerant to be charged [in kg and rounded off to 1 decimal place]
$\mathbf{X_{1...6}}$	Total length [m] of liquid piping size at **Øa**
A~C	Parameters A~C

Parameter A. If the total indoor unit capacity connection ratio (CR)>100%, charge an additional 0.5 kg of refrigerant per outdoor unit.

Parameter B. In case of a multi-outdoor-unit system, add the sum of the individual outdoor unit charge factors.

Model	B
REMQ5+REYQ8+ REYQ10+REYQ12	0 kg
REYQ14	1.3 kg
REYQ16	1.4 kg
REYQ18	4.7 kg
REYQ20	4.8 kg

Parameter C. When using more than one multi BS unit, add the sum of the individual BS unit charge factors.

Model	C
BS1Q10	0.05 kg
BS1Q16	0.1 kg
BS1Q25	0.2 kg
BS4Q	0.3 kg
BS6Q	0.4 kg
BS8Q	0.5 kg
BS10Q	0.7 kg
BS12Q	0.8 kg
BS16Q	1.1 kg

Metric piping. When using metric piping, replace the weight factors in the formula by the ones from the following table:

Inch piping		Metric piping	
Piping	Weight factor	Piping	Weight factor
Ø6.4 mm	0.022	Ø6 mm	0.018
Ø9.5 mm	0.059	Ø10 mm	0.065
Ø12.7 mm	0.12	Ø12 mm	0.097
Ø15.9 mm	0.18	Ø15 mm	0.16
		Ø16 mm	0.18
Ø19.1 mm	0.26	Ø18 mm	0.24
Ø22.2 mm	0.37	Ø22 mm	0.35

Connection ratio requirements. When selecting indoor units, the connection ratio must comply with the following requirements. For more information, see the technical engineering data.

Other combinations than those mentioned in the table are not allowed.

Indoor units	Maximum[a]	Total CR[b]	CR per type[c]	
			Type	CR
VRV DX	64	50~130%	VRV DX	50~130%
			VRV DX without BS unit (cooling-only)[e]	0~50%
VRV DX + Hydrobox	32	50~200%[d]	VRV DX	50~110%
			VRV DX without BS unit (cooling-only)[e]	0~50%
			LT + HT Hydrobox	0~100%

Indoor units	Maximum[a]	Total CR[b]	CR per type[c]	
			Type	CR
VRV DX + AHU	64	50~110%	VRV DX	50~110%
			VRV DX without BS unit (cooling-only)[e]	0~50%
			AHU	0~60%

(a) Maximum number allowed excluding BS units and EKEXV kits
(b) Total CR = Total indoor unit capacity connection ratio
(c) CR per type = Allowable capacity connection ratio per indoor unit type
(d) The total capacity of VRV DX indoor units and LT Hydrobox units is maximum 130%
(e) Cooling-only VRV indoor units cannot be combined with HT Hydrobox units

6.7.4 To charge refrigerant: Flow chart

For more information, see "6.7.5 To charge refrigerant" on page 31.

Pre-charging refrigerant

Step 1
Calculate additional refrigerant charge amount: R (kg)

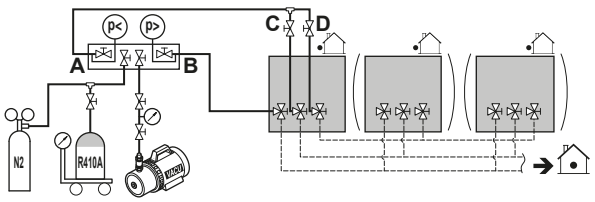

Step 2+3
- Close valves C, D and A
- Open valve B to the liquid line
- Execute pre-charging amount: Q (kg)
- Disconnect the manifold from the gas line and the high pressure/low pressure gas line

R=Q

Step 4a
- Close valve B
- Charging is finished
- Fill in the amount on the additional refrigerant charge label
- Input the additional refrigerant amount via setting [2-14]
- Go to test run

R<Q

Refrigerant overcharge happened, recover refrigerant to reach R=Q

R>Q

Step 4b
Close valve B

Continued on next page >>

Charging refrigerant

<< Continuation of previous page

R>Q

Step 5
- Connect valve A to the refrigerant charge port (d)
- Open all outdoor unit stop valves

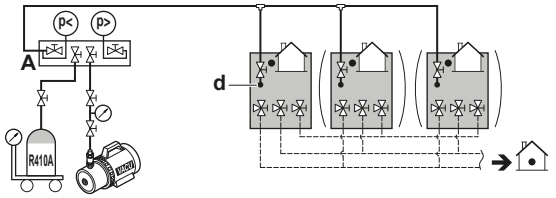

Step 6
Proceed with automatic or manual charge

Automatic charge

Step 6a
- Push 1x BS2: "888"
- Push BS2 for more than 5 seconds "t0 1" pressure equalisation

Depending on ambient conditions, the unit will decide to perform autocharge operation in heating or cooling mode.

Continued on next page >>

Manual charge

Step 6b
Activate field setting [2-20]=1
Unit will start manual refrigerant charging operation.

- Open valve A
- Charge remaining amount of refrigerant P (kg)
  R=Q+P

- Close valve A
- Push BS3 to stop manual charging
- Charging is finished
- Fill in the amount on the additional refrigerant charge label
- Input the additional refrigerant amount via setting [2-14]
- Go to test run

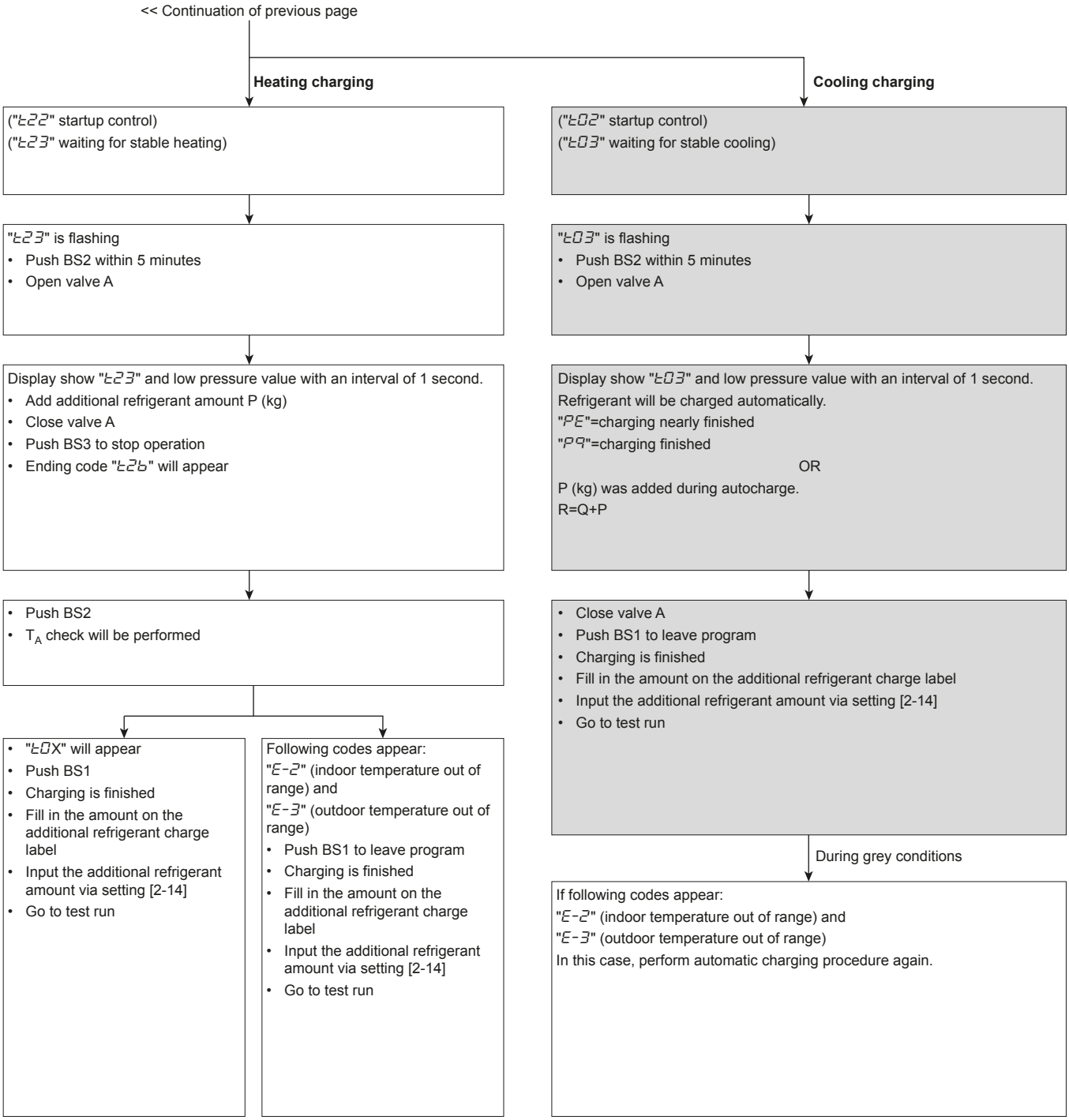

6.7.5 To charge refrigerant

Follow the steps as described below and take into account whether you want to use the automatic charge function or not.

Pre-charging refrigerant

1 Calculate the additional amount of refrigerant to be added using the formula mentioned in "6.7.3 To determine the additional refrigerant amount" on page 28.

2 The first 10 kg of additional refrigerant can be pre-charged without outdoor unit operation:

If	Then
The additional refrigerant amount is smaller than 10 kg	Perform steps 3~4.
The additional refrigerant charge is larger than 10 kg	Perform steps 3~6.

3 Pre-charging can be done without compressor operation, by connecting the refrigerant bottle to the service port of the liquid stop valve (open valve B). Make sure that all outdoor unit stop valves, as well as valves A, C, and D are closed.

NOTICE

During pre-charging, the refrigerant is charged through the liquid line only. Close valves C, D, and A and disconnect the manifold from the gas line and the high pressure/low pressure gas line.

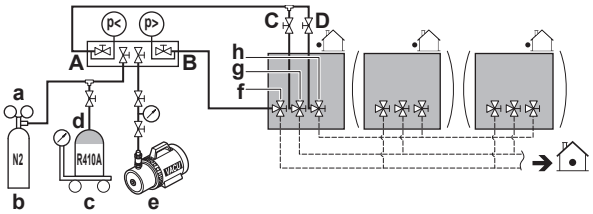

- **a** Pressure reducing valve
- **b** Nitrogen
- **c** Weighing scales
- **d** Refrigerant R410A tank (siphon system)
- **e** Vacuum pump
- **f** Liquid line stop valve
- **g** Gas line stop valve
- **h** High pressure/low pressure gas line stop valve
- **A** Valve A
- **B** Valve B
- **C** Valve C
- **D** Valve D

4 Do one of the following:

	If	Then
4a	The calculated additional refrigerant amount is reached by above pre-charging procedure	Close valve B and disconnect the manifold from the liquid line.
4b	The total amount of refrigerant could not be charged by pre-charging	Close valve B, disconnect the manifold from the liquid line, and perform steps 5~6.

INFORMATION

If the total additional refrigerant amount was reached in step 4 (by pre-charging only), record the amount of refrigerant that was added on the additional refrigerant charge label provided with the unit and attach it on the back side of the front panel.

Additionally, input the additional refrigerant amount into the system via setting [2-14].

Perform the test procedure as described in "8 Commissioning" on page 47.

Charging refrigerant

5 After pre-charging, connect valve A to the refrigerant charge port and charge the remaining additional refrigerant through this port. Open all outdoor unit stop valves. At this point, valve A must remain closed!

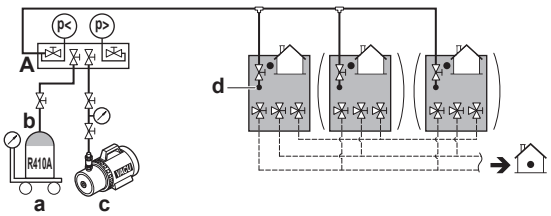

- **a** Weighing scales
- **b** Refrigerant R410A tank (siphon system)
- **c** Vacuum pump
- **d** Refrigerant charge port
- **A** Valve A

INFORMATION

For a multi outdoor unit system, it is not required to connect all charge ports to a refrigerant tank.

The refrigerant will be charged with ±22 kg in 1 hour time at an outdoor temperature of 30°C DB or with ±6 kg at an outdoor temperature of 0°C DB.

If you need to speed up in case of a multiple outdoor system, connect the refrigerant tanks to each outdoor unit.

NOTICE

- The refrigerant charging port is connected to the piping inside the unit. The unit's internal piping is already factory charged with refrigerant, so be careful when connecting the charge hose.
- After adding the refrigerant, do not forget to close the lid of the refrigerant charging port. The tightening torque for the lid is 11.5 to 13.9 N•m.
- In order to ensure uniform refrigerant distribution, it may take the compressor ±10 minutes to start up after the unit has started operation. This is not a malfunction.

6 Proceed with one of the following:

6a	"6.7.6 Step 6a: To automatically charge refrigerant" on page 32
6b	"6.7.7 Step 6b: To manually charge refrigerant" on page 33

INFORMATION

After charging refrigerant:

- Record the additional refrigerant amount on the refrigerant label provided with the unit and attach it to the backside of the front panel.
- Input the additional refrigerant amount into the system via setting [2-14].
- Perform the test procedure described in "8 Commissioning" on page 47.

6.7.6 Step 6a: To automatically charge refrigerant

INFORMATION

The automatic refrigerant charging has limits as described below. Out of these limits, the system cannot operate the automatic refrigerant charging:

- Outdoor temperature: 0~43°C DB.
- Indoor temperature: 10~32°C DB.
- Total indoor unit capacity: ≥80%.

The remaining additional refrigerant charge can be charged by operating the outdoor unit by means of the automatic refrigerant charge operation mode.

Depending on the ambient limitation conditions (see above), the unit will automatically decide which operation mode will be used to fulfill the automatic refrigerant charge: cooling or heating. If above conditions are fulfilled, cooling operation will be selected. If not, heating.

Procedure

1 Idle (default) screen is shown.

2 Push BS2 once.

Result: Indication "888".

3 Push BS2 for more than 5 seconds, wait while the unit is preparing for operation. 7-segment display indication: "t01" (pressure control is executed):

If	Then
Heating operation is started	Indication "t22" till "t23" will be displayed (start up control; waiting stable heating operation).
Cooling operation is started	Indication "t02" till "t03" will be displayed (start up control; waiting stable cooling operation).

4 When "t23 " or "t03" starts flashing (ready for charging), push BS2 within 5 minutes. Open valve A. If BS2 is not pushed within 5 minutes, a malfunction code will appear:

If	Then
Heating operation	"t26" will be flashing. Push BS2 to restart the procedure.
Cooling operation	Malfunction code "P2" will appear. Push BS1 to abort and restart the procedure.

Heating (middle 7-segment display indicates "2")

Charging will continue, the 7-segment display indication intermittently shows the current low pressure value and the status indication "t23".

When the remaining additional refrigerant amount is charged, close valve A immediately and push BS3 to stop charging operation.

After BS3 is pushed, the ending code "t26" will appear. When BS2 is pushed, the unit will check whether the ambient conditions are favourable to execute the test run.

Test run including detailed refrigerant status check is required to use the leak detection functionality. More information, see "8 Commissioning" on page 47.

If	Then
"t01", "t02", or "t03" appears	Push BS1 to finish the automatic charging function procedure. The ambient conditions are favourable to execute the test run.
"E-2", or "E-3" appears	The ambient conditions are NOT favourable to execute the test run. Push BS1 to finish the automatic charging procedure.

INFORMATION

In case a malfunction code occurred during this automatic charging procedure, the unit will stop and indicate "t26" flashing. Push BS2 to restart the procedure.

Cooling (middle 7-segment display indicates "0")

Automatic charging will continue, the 7-segment display indication shows the current low pressure value and the status indication "t03 " intermittent.

If the 7-segment display indication/user interface of indoor unit shows "PE" code, charging is almost finished. When the unit stops operating, close valve A immediately and check whether the 7-segment display indication/user interface of indoor unit shows "P9 ". This indicates the automatic charging in cooling program was finished successfully.

INFORMATION

When the charging amount is little, the "PE" code may not be displayed, but instead the "P9" code will be displayed immediately.

When the required (calculated) additional refrigerant amount is already charged before "PE" or "P9" indication appears, close valve A and wait till "P9" is displayed.

If during the cooling operation for the automatic refrigerant charge the ambient conditions go beyond the allowable for this operation mode, the unit will indicate on the 7-segment display "E-2" in case indoor temperature is out of range or "E-3" in case the outdoor temperature is out of range. In this case, when the additional refrigerant charging was not finished, step "6.7.6 Step 6a: To automatically charge refrigerant" on page 32 has to be repeated.

INFORMATION

- When a malfunction is detected during the procedure (e.g, in case of closed stop valve), a malfunction code will be displayed. In that case, refer to "10.2 Solving problems based on error codes" on page 50 and solve the malfunction accordingly. Resetting the malfunction can be done by pushing BS1. The procedure can be restarted from "6.7.6 Step 6a: To automatically charge refrigerant" on page 32.
- Aborting the automatic refrigerant charge is possible by pushing BS1. The unit will stop and return to idle condition.

Perform the test procedure as described in "8 Commissioning" on page 47.

6.7.7 Step 6b: To manually charge refrigerant

The remaining additional refrigerant charge can be charged by operating the outdoor unit by means of the manual refrigerant charge operation mode:

1 Take all the precautions mentioned in "7 Configuration" on page 38 and "8 Commissioning" on page 47 into account.

2 Turn on the power of the indoor units and outdoor unit.

3 Activate outdoor unit setting [2-20]=1 to start manual refrigerant charge mode. Refer to "7.2.8 Mode 2: Field settings" on page 41 for details.

Result: The unit will start operation.

4 Valve A can be opened. Charging of remaining additional refrigerant can be done.

5 When the remaining calculated additional refrigerant amount is added, close valve A and push BS3 to stop the manual refrigerant charging procedure.

INFORMATION

The manual refrigerant charge operation will automatically stop within 30 minutes. If charging is not completed after 30 minutes, perform the additional refrigerant charging operation again.

6 Perform the test procedure as described in "8 Commissioning" on page 47.

INFORMATION

- When a malfunction is detected during the procedure (e.g., in case of closed stop valve), a malfunction code will be displayed. In that case, refer to "6.7.8 Error codes when charging refrigerant" on page 34 and solve the malfunction accordingly. Resetting the malfunction can be done by pushing BS3. The procedure can be restarted from "6.7.7 Step 6b: To manually charge refrigerant" on page 33.
- Aborting the manual refrigerant charge is possible by pushing BS3. The unit will stop and return to idle condition.

6.7.8 Error codes when charging refrigerant

Code	Cause	Solution
P2	Unusual low pressure on suction line	Close valve A immediately. Push BS3 to reset. Check following items before retrying autocharge procedure: ▪ Check if all gas-side stop valves are opened correctly. ▪ Check if the valve of the refrigerant cylinder is opened. ▪ Check if the air inlet and outlet of the indoor unit are not obstructed.
P8	Freeze-up prevention indoor unit	Close valve A immediately. Push BS3 to reset. Retry autocharge procedure.
E-2	Indoor unit is out of temperature range for leak detection operation	Retry when ambient conditions are satisfied.
E-3	Outdoor unit is out of temperature range for leak detection operation	Retry when ambient conditions are satisfied.
E-5	Indicates an indoor unit which is not compatible with leak detection functionality is installed (e.g. Hydrobox units, …)	Refer to requirements to be able to execute leak detection operation.
Other malfunction code	—	Close valve A immediately. Confirm the malfunction code and take corresponding action, "10.2 Solving problems based on error codes" on page 50.

6.7.9 Checks after charging refrigerant

- Are all stop valves open?
- Is the amount of refrigerant, that has been added, recorded on the refrigerant charge label?

NOTICE

Make sure to open all stop valves after (pre-) charging the refrigerant.

Operating with the stop valves closed will damage the compressor.

6.7.10 To fix the fluorinated greenhouse gases label

1 Fill in the label as follows:

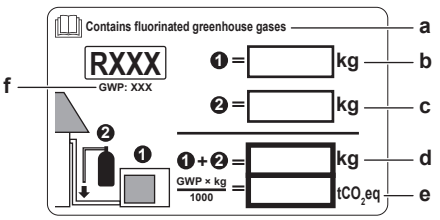

a If a multilingual fluorinated greenhouse gases label is delivered with the unit (see accessories), peel off the applicable language and stick it on top of **a**.
b Factory refrigerant charge: see unit name plate
c Additional refrigerant amount charged
d Total refrigerant charge
e **Greenhouse gas emissions** of the total refrigerant charge expressed as tonnes CO_2 equivalent
f GWP = Global warming potential

NOTICE

In Europe, the **greenhouse gas emissions** of the total refrigerant charge in the system (expressed as tonnes CO_2 equivalent) is used to determine the maintenance intervals. Follow the applicable legislation.

Formula to calculate the greenhouse gas emissions: GWP value of the refrigerant × Total refrigerant charge [in kg] / 1000

2 Fix the label on the inside of the outdoor unit near the gas and liquid stop valves.

6.8 Connecting the electrical wiring

6.8.1 Precautions when connecting electrical wiring

DANGER: RISK OF ELECTROCUTION

WARNING

All field wiring and components MUST be installed by a licensed electrician and MUST comply with the applicable legislation.

WARNING

If NOT factory installed, a main switch or other means for disconnection, having a contact separation in all poles providing full disconnection under overvoltage category III condition, MUST be installed in the fixed wiring.

WARNING

- ONLY use copper wires.
- Make sure the field wiring complies with the applicable legislation.
- All field wiring MUST be performed in accordance with the wiring diagram supplied with the product.
- NEVER squeeze bundled cables and make sure they do NOT come in contact with the piping and sharp edges. Make sure no external pressure is applied to the terminal connections.
- Make sure to install earth wiring. Do NOT earth the unit to a utility pipe, surge absorber, or telephone earth. Incomplete earth may cause electrical shock.
- Make sure to use a dedicated power circuit. NEVER use a power supply shared by another appliance.
- Make sure to install the required fuses or circuit breakers.
- Make sure to install an earth leakage protector. Failure to do so may cause electric shock or fire.
- When installing the earth leakage protector, make sure it is compatible with the inverter (resistant to high frequency electric noise) to avoid unnecessary opening of the earth leakage protector.

Install power cables at least 1 metre away from televisions or radios to prevent interference. Depending on the radio waves, a distance of 1 metre may not be sufficient.

WARNING

- After finishing the electrical work, confirm that each electrical component and terminal inside the electrical components box is connected securely.
- Make sure all covers are closed before starting up the unit.

NOTICE

Do NOT operate the unit until the refrigerant piping is complete. Running the unit before the piping is ready will break the compressor.

NOTICE

If the power supply has a missing or wrong N-phase, equipment will break down.

NOTICE

Do NOT install a phase advancing capacitor, because this unit is equipped with an inverter. A phase advancing capacitor will reduce performance and may cause accidents.

NOTICE

NEVER remove a thermistor, sensor, etc., when connecting power wiring and transmission wiring. (If operated without thermistor, sensor, etc., the compressor may break down.)

NOTICE

- The reversed phase protection detector of this product only functions when the product starts up. Consequently reversed phase detection is not performed during normal operation of the product.
- The reversed phase protection detector is designed to stop the product in the event of an abnormality when the product is started up.
- Replace 2 of the 3 phases (L1, L2, and L3) during reverse-phase protection abnormality.

NOTICE

Only applicable if the power supply is three-phase, and the compressor has an ON/OFF starting method.

If there exists the possibility of reversed phase after a momentary black out and the power goes on and off while the product is operating, attach a reversed phase protection circuit locally. Running the product in reversed phase can break the compressor and other parts.

6.8.2 Field wiring: Overview

Field wiring consists of power supply (always including earth) and indoor-outdoor communication (= transmission) wiring.

Example:

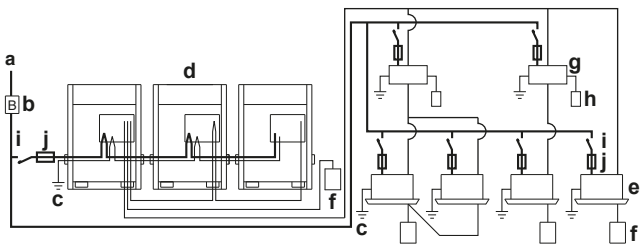

- **a** Field power supply (with earth leakage protector)
- **b** Main switch
- **c** Earth connection
- **d** Outdoor unit
- **e** Indoor unit
- **f** User interface
- **g** BS unit
- **h** Cool/heat selector
- **i** Circuit breaker
- **j** Fuse
- Power supply 3N~ 50 Hz
- Power supply 1~ 50 Hz
- Earth wiring

6.8.3 About the electrical wiring

It is important to keep the power supply and the transmission wiring separated from each other. In order to avoid any electrical interference the distance between both wiring should always be at least 25 mm.

NOTICE

- Be sure to keep the power line and transmission line apart from each other. Transmission wiring and power supply wiring may cross, but may not run parallel.
- Transmission wiring and power supply wiring may not touch internal piping (except the inverter PCB cooling pipe) in order to avoid wire damage due to high temperature piping.
- Firmly close the lid and arrange the electrical wires so as to prevent the lid or other parts from coming loose.

The transmission wiring outside the unit should be wrapped and routed together with the field piping.

Field piping can be routed from front or bottom of the unit (going left or right). Refer to "6.4.3 To route the refrigerant piping" on page 22.

- Be sure to follow the limits below. If the unit-to-unit cables are beyond these limits, it may result in malfunction of transmission:
  - Maximum wiring length: 1000 m.
  - Total wiring length: 2000 m.
  - Maximum inter unit wiring length between outdoor units: 30 m.
  - Transmission wiring to cool/heat selector: 500 m.
  - Maximum number of branches: 16.
- Maximum number of independent interconnectable systems: 10.
- Up to 16 branches are possible for unit-to-unit cabling. No branching is allowed after branching (see figure below).

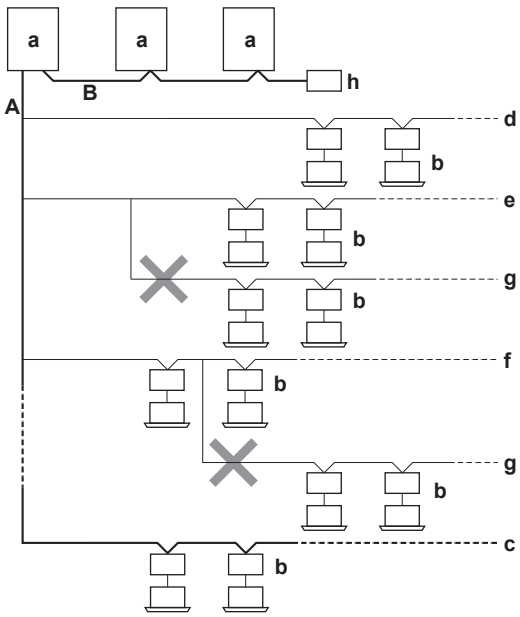

- **a** Outdoor unit
- **b** Indoor unit + BS unit
- **c** Main line
- **d** Branch line 1
- **e** Branch line 2
- **f** Branch line 3
- **g** No branch is allowed after branch

- **h** Central user interface (etc...)
- **A** Outdoor/indoor transmission wiring
- **B** Master/slave transmission wiring

For the above wiring, always use vinyl cords with 0.75 to 1.25 mm^2 sheath or cables (2-core wires). (3-core wire cables are allowable for the cooler/heater changeover user interface only.)

6.8.4 Guidelines when knocking out knockout holes

- To punch a knockout hole, hit on it with a hammer.
- After knocking out the holes, we recommend removing any burrs and paint the edges and areas around the holes using repair paint to prevent rusting.
- When passing electrical wiring through the knockout holes. prevent damage to the wires by wrapping the wiring with protective tape, putting the wires through field supplied protective wire conduits at that location, or install suitable field supplied wire nipples or rubber bushings into the knockout holes.

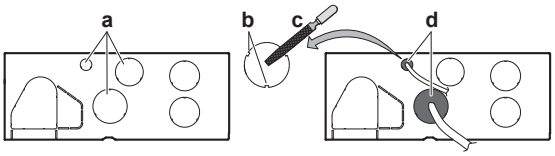

- **a** Knockout hole
- **b** Burr
- **c** Remove burrs
- **d** If there are any possibilities that small animals enter the system through the knockout holes, plug the holes with packing materials (to be prepared on-site)

6.8.5 To route and fix the transmission wiring

Transmission wiring can be routed through the front side only. Fix it to the upper mounting hole.

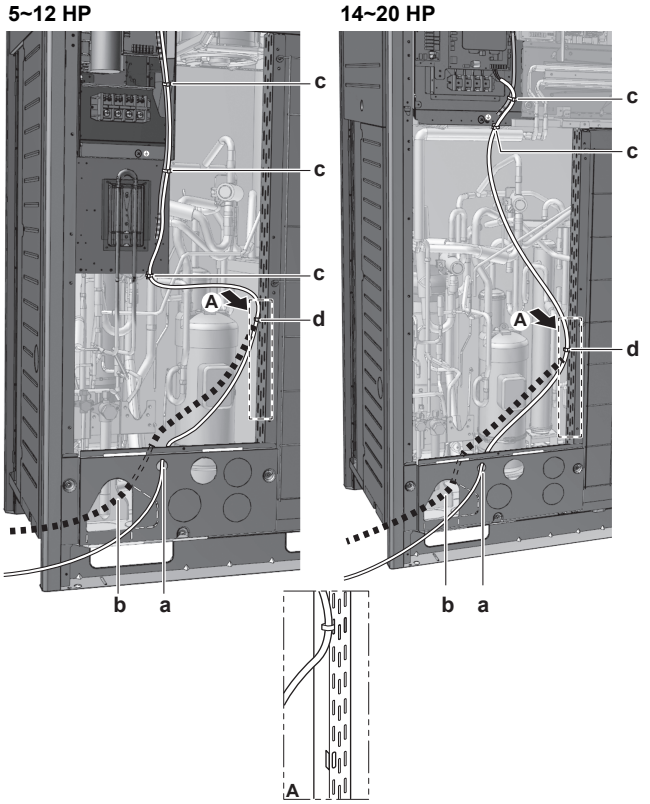

- **a** Transmission wiring (possibility 1)[(a)]
- **b** Transmission wiring (possibility 2)[(a)]. Fix to pipe insulation with tie wraps.
- **c** Tie wrap. Fix to factory-mounted low voltage wiring.
- **d** Tie wrap.

(a) Knockout hole has to be removed. Close the hole to avoid small animals or dirt from entering.

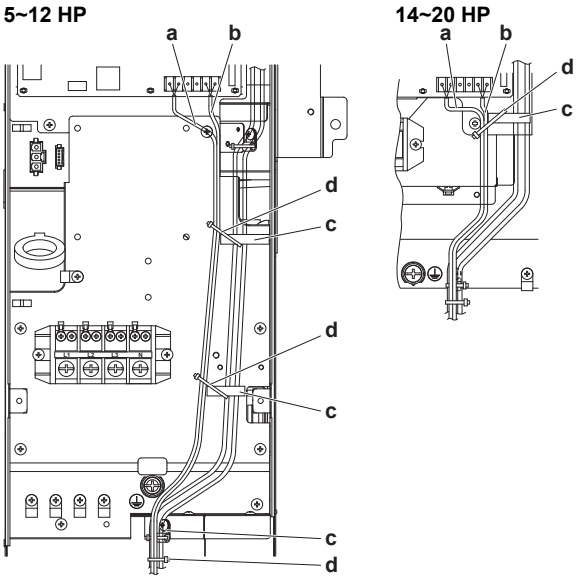

Fix to the indicated plastic brackets using field supplied clamping material.

- **a** Wiring between the units (indoor-outdoor) (F1/F2 left)
- **b** Internal transmission wiring (Q1/Q2)
- **c** Plastic bracket
- **d** Field supplied clamps

6.8.6 To connect the transmission wiring

The wiring from the indoor units must be connected to the F1/F2 (In-Out) terminals on the PCB in the outdoor unit.

Tightening torque for the transmission wiring terminal screws:

Screw size	Tightening torque (N•m)
M3.5 (A1P)	0.8~0.96

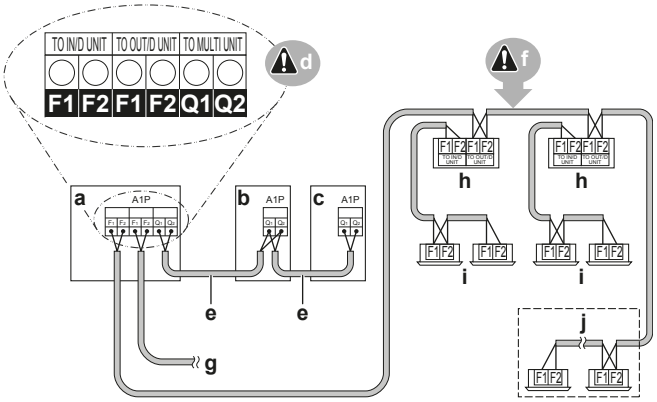

- **a** Unit A (master outdoor unit)
- **b** Unit B (slave outdoor unit)
- **c** Unit C (slave outdoor unit)
- **d** Outdoor unit PCB (A1P)
- **e** Master/slave transmission (Q1/Q2)
- **f** Outdoor/indoor transmission (F1/F2)
- **g** Outdoor unit/other system transmission (F1/F2)
- **h** BS unit
- **i** Indoor unit
- **j** Cooling-only VRV indoor unit / Heating-only Hydrobox unit

- The interconnecting wiring between the outdoor units in the same piping system must be connected to the Q1/Q2 (Out Multi) terminals. Connecting the wires to the F1/F2 terminals results in system malfunction.
- The wiring for the other systems must be connected to the F1/F2 (Out-Out) terminals of the PCB in the outdoor unit to which the interconnecting wiring for the indoor units is connected.

- The base unit is the outdoor unit to which the interconnecting wiring for the indoor units is connected.

6.8.7 To finish the transmission wiring

After installing the transmission wires inside the unit, wrap them along with the on-site refrigerant pipes using finishing tape, as shown in figure below.

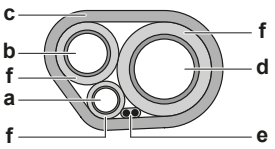

- **a** Liquid pipe
- **b** Gas pipe
- **c** Finishing tape
- **d** High pressure/low pressure gas pipe
- **e** Transmission wiring (F1/F2)
- **f** Insulator

6.8.8 To route and fix the power supply

NOTICE

When routing earth wires, secure clearance of 25 mm or more away from compressor lead wires. Failure to observe this instruction properly may adversely affect correct operation of other units connected to the same earth.

The power supply wiring can be routed from the front and left side. Fix it to the lower mounting hole.

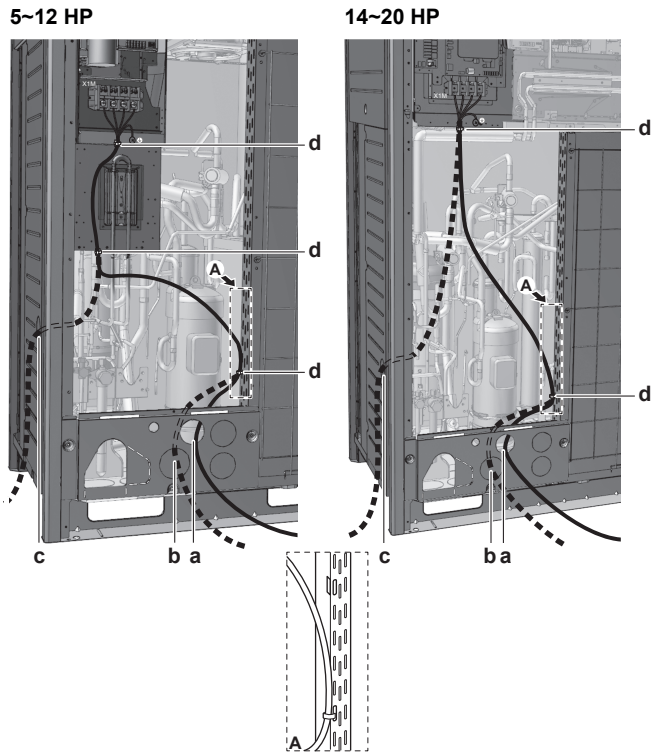

- **a** Power supply (possibility 1)[(a)]
- **b** Power supply (possibility 2)[(a)]
- **c** Power supply (possibility 3)[(a)]. Use conduit.
- **d** Tie wrap

(a) Knockout hole has to be removed. Close the hole to avoid small animals or dirt from entering.

6.8.9 To connect the power supply

NOTICE

Never connect the power supply to transmission wiring terminal block. Otherwise the entire system may break down.

CAUTION

When connecting the power supply, the earth connection must be made before the current-carrying connections are established. When disconnecting the power supply, the current-carrying connections must be separated before the earth connection is. The length of the conductors between the power supply stress relief and the terminal block itself must be as such that the current-carrying wires are tautened before the earth wire is in case the power supply is pulled loose from the stress relief.

Tightening torque for the terminal screws:

Screw size	Tightening torque (N•m)
M8 (power terminal block)	5.5~7.3
M8 (ground)	

NOTICE

Recommendations when connecting the earth wire:

Wire it so that it comes through the cut out section of the cup washer. (An improper earth connection may prevent a good earthing from being achieved.)

The power supply MUST be clamped to the plastic bracket using field supplied clamp material to prevent external force being applied to the terminal. The green and yellow striped wire MUST be used for earthing only.

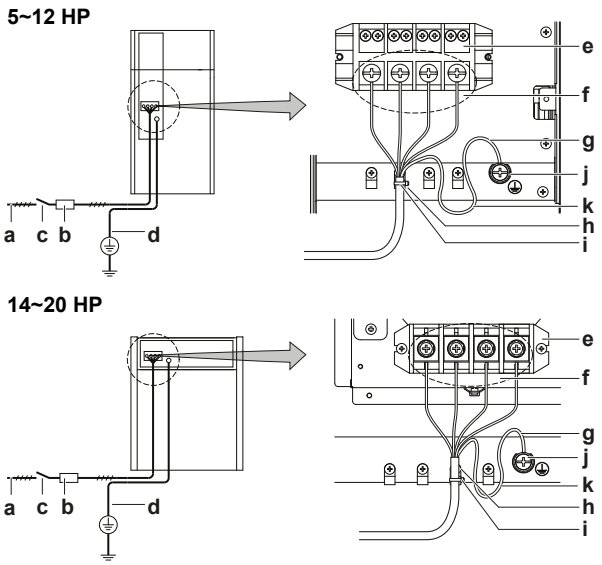

- **a** Power supply (380~415 V, 3N~ 50 Hz)
- **b** Fuse
- **c** Earth leakage protector
- **d** Earth wire
- **e** Power supply terminal block
- **f** Connect each power wire: RED to L1, WHT to L2, BLK to L3 and BLU to N
- **g** Earth wire (GRN/YLW)
- **h** Clamp the power supply to the plastic bracket using a field supplied clamp to prevent external force being applied to the terminal.
- **i** Clamp (field supplied)
- **j** Cup washer
- **k** When connecting the earth wire, it is recommended to perform curling.

Multiple outdoor units

To connect the power supply for multiple outdoor units to each other, ring tongues have to be used. No bare cable can be used.

In that case, the ring washer that is installed by default should be removed.

Attach both cables to the power supply terminal as indicated below:

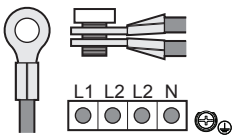

7 Configuration

7.1 Overview: Configuration

This chapter describes what you have to do and know to configure the system after it is installed.

It contains information about:

- Making field settings
- Energy saving and optimum operation
- Using the leak detection function

INFORMATION

It is important that all information in this chapter is read sequentially by the installer and that the system is configured as applicable.

DANGER: RISK OF ELECTROCUTION

7.2 Making field settings

7.2.1 About making field settings

To continue the configuration of the VRV IV heat recovery system, it is required to give some input to the PCB of the unit. This chapter will describe how manual input is possible by operating the push buttons on the PCB and reading the feedback from the 7-segment displays.

Making settings is done via the master outdoor unit.

Next to making field settings it is also possible to confirm the current operation parameters of the unit.

Push buttons

Performing special actions (automatic refrigerant charge, test run, etc.) and making field settings (demand operation, low noise, etc.) happens by way of operating the push buttons.

See also:

- "7.2.2 Field setting components" on page 38
- "7.2.3 To access the field setting components" on page 38

PC configurator

For VRV IV heat recovery system it is alternatively possible to make several commissioning field settings through a personal computer interface (for this, option EKPCCAB is required). The installer can prepare the configuration (off-site) on PC and afterwards upload the configuration to the system.

See also: "7.2.9 To connect the PC configurator to the outdoor unit" on page 43.

Mode 1 and 2

Mode	Description
Mode 1 (monitoring settings)	Mode 1 can be used to monitor the current situation of the outdoor unit. Some field setting contents can be monitored as well.
Mode 2 (field settings)	Mode 2 is used to change the field settings of the system. Consulting the current field setting value and changing the current field setting value is possible. In general, normal operation can be resumed without special intervention after changing field settings. Some field settings are used for special operation (e.g., 1 time operation, recovery/vacuuming setting, manual adding refrigerant setting, etc.). In such a case, it is required to abort the special operation before normal operation can restart. It will be indicated in below explanations.

See also:

- "7.2.4 To access mode 1 or 2" on page 39
- "7.2.5 To use mode 1" on page 39
- "7.2.6 To use mode 2" on page 39
- "7.2.7 Mode 1: Monitoring settings" on page 40
- "7.2.8 Mode 2: Field settings" on page 41

7.2.2 Field setting components

Location of the 7-segment displays, buttons and DIP switches:

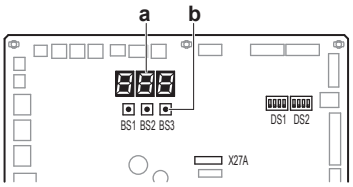

BS1 MODE: For changing the set mode
BS2 SET: For field setting
BS3 RETURN: For field setting
DS1, DS2 DIP switches
a 7-segment displays
b Push buttons

7.2.3 To access the field setting components

It is not required to open the complete electronic component box to access the push buttons on the PCB and read out the 7-segment display(s).

To access you can remove the front inspection cover of the front plate (see figure). Now you can open the inspection cover of the electrical component box front plate (see figure). You can see the three push buttons and the three 7-segment displays and DIP switches.

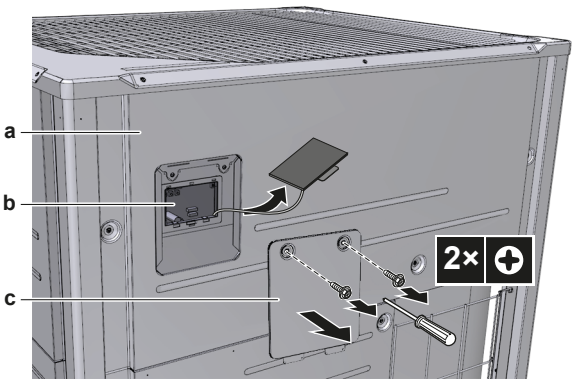

a Front plate
b Main PCB with 3 7-segment displays and 3 push buttons
c Electrical component box service cover

Operate the switches and push buttons with an insulated stick (such as a closed ball-point pen) to avoid touching of live parts.

Make sure to re-attach the inspection cover into the electronic component box cover and to close the front plate's inspection cover after the job is finished. During operation of the unit the front plate of the unit should be attached. Settings are still possible to be made through the inspection opening.

NOTICE

Make sure that all outside panels, except for the service cover on the electrical component box, are closed while working.

Close the lid of the electrical component box firmly before turning on the power.

7.2.4 To access mode 1 or 2

Initialisation: default situation

NOTICE

Be sure to turn on the power 6 hours before operation in order to have power running to the crankcase heater and to protect the compressor.

Turn on the power supply of the outdoor unit and all indoor units. When the communication between indoor units and outdoor unit(s) is established and normal, the 7-segment display indication state will be as below (default situation when shipped from factory).

Stage	Display
When turning on the power supply: flashing as indicated. First checks on power supply are executed (1~2 min).	
When no trouble occurs: lighted as indicated (8~10 min).	
Ready for operation: blank display indication as indicated.	

7-segment display indications:

- Off
- Blinking
- On

When above situation cannot be confirmed after 12 min, the malfunction code can be checked on the indoor unit user interface and the outdoor unit 7-segment display. Solve the malfunction code accordingly. The communication wiring should be checked at first.

Access

BS1 is used to change the mode you want to access.

Access	Action
Mode 1	Push BS1 one time. 7-segment display indication changes to:
Mode 2	Push BS1 for at least 5 seconds. 7-segment display indication changes to:

INFORMATION

If you get confused in the middle of the process, push BS1. Then it returns to idle situation (no indication on 7-segment displays: blank, refer to "7.2.4 To access mode 1 or 2" on page 39.

7.2.5 To use mode 1

Mode 1 is used to set basic settings and to monitor the status of the unit.

What	How
Changing and accessing the setting in mode 1	Once mode 1 is selected (push BS1 one time), you can select the wanted setting. It is done by pushing BS2. Accessing the selected setting's value is done by pushing BS3 one time.
To quit and return to the initial status	Press BS1.

Example:

Checking the content of parameter [1-10] (to know how many indoor units are connected to the system).

[A-B]=C in this case defined as: A=1; B=10; C=the value we want to know/monitor:

1. Make sure the 7-segment display indication is as during normal operation (default situation when shipped from factory).
2. Push BS1 one time.

   Result: Mode 1 is accessed:
3. Push BS2 10 times.

   Result: Mode 1 setting 10 is addressed:
4. Push BS3 one time; the value which is returned (depending on the actual field situation), is the amount of indoor units which are connected to the system.

   Result: Mode 1 setting 10 is addressed and selected, return value is monitored information
5. To leave the monitoring function, push BS1 one time.

Result: You will return to the default situation when shipped from factory.

7.2.6 To use mode 2

The master unit should be used to input field settings in mode 2.

Mode 2 is used to set field settings of the outdoor unit and system.

What	How
Changing and accessing the setting in mode 2	Once mode 2 is selected (push BS1 for more than 5 seconds), you can select the wanted setting. It is done by pushing BS2. Accessing the selected setting's value is done by pushing BS3 1 time.
To quit and return to the initial status	Press BS1.
Changing the value of the selected setting in mode 2	▪ Once mode 2 is selected (push BS1 for more than 5 seconds) you can select the wanted setting. It is done by pushing BS2. ▪ Accessing the selected setting's value is done by pushing BS3 1 time. ▪ Now BS2 is used to select the required value of the selected setting. ▪ When the required value is selected, you can define the change of value by pushing BS3 1 time. ▪ Press BS3 again to start operation according to the chosen value.

Example:

Checking the content of parameter [2-18] (to define the high static pressure setting of the outdoor unit's fan).

[A-B]=C in this case defined as: A=2; B=18; C=the value we want to know/change

1 Make sure the 7-segment display indication is as during normal operation (default situation when shipped from factory).

2 Push BS1 for over 5 seconds.

Result: Mode 2 is accessed:

3 Push BS2 18 times.

Result: Mode 2 setting 18 is addressed:

4 Push BS3 1 time; the value which is returned (depending on the actual field situation), is the status of the setting. In the case of [2-18], default value is "0", which means the function is not active.

Result: Mode 2 setting 18 is addressed and selected, return value is the current setting situation.

5 To change the value of the setting, push BS2 till the required value appears on the 7-segment display indication. When achieved, define the setting value by pushing BS3 1 time. To start operation according to the chosen setting, confirm again by pushing BS3.

6 To leave the monitoring function, push BS1 2 times.

Result: You will return to the default situation when shipped from factory.

7.2.7 Mode 1: Monitoring settings

[1-0]

Shows whether the unit you check is a master, slave 1 or slave 2 unit.

Master, slave 1 and slave 2 indications are relevant in multiple outdoor unit system configurations. The allocation of which outdoor unit is master, slave 1 or slave 2 are decided by the unit's logic.

The master unit should be used to input field settings in mode 2.

[1-0]	Description
No indication	Undefined situation.
0	Outdoor unit is master unit.
1	Outdoor unit is slave 1 unit.
2	Outdoor unit is slave 2 unit.

[1-1]

Shows the status of low noise operation.

Low noise operation reduces the sound generated by the unit compared to nominal operating conditions.

[1-1]	Description
0	Unit is currently not operating under low noise restrictions.
1	Unit is currently operating under low noise restrictions.

Low noise operation can be set in mode 2. There are two methods to activate low noise operation of the outdoor unit system.

- The first method is to enable an automatic low noise operation during night time by field setting. The unit will operate at the selected low noise level during the selected time frames.
- The second method is to enable low noise operation based on an external input. For this operation an optional accessory is required.

[1-2]

Shows the status of power consumption limitation operation.

Power consumption limitation reduces the power consumption of the unit compared to nominal operating conditions.

[1-2]	Description
0	Unit is currently not operating under power consumption limitations.
1	Unit is currently operating under power consumption limitation.

Power consumption limitation can be set in mode 2. There are two methods to activate power consumption limitation of the outdoor unit system.

- The first method is to enable a forced power consumption limitation by field setting. The unit will always operate at the selected power consumption limitation.
- The second method is to enable power consumption limitation based on an external input. For this operation an optional accessory is required.

[1-5] [1-6]

Shows:

- [1-5]: The current T_e target parameter position.
- [1-6]: The current T_c target parameter position.

For more information and advice about the impact of these settings, see "7.3 Energy saving and optimum operation" on page 44.

[1-10]

Shows the total number of connected VRV and AHU indoor units.

It can be convenient to check if the total number of indoor units which are installed match the total number of indoor units which are recognised by the system. In case there is a mismatch, it is recommended to check the communication wiring path between outdoor and indoor units (F1/F2 communication line).

[1-13]

Shows the total number of connected outdoor units (in case of multiple outdoor system).

It can be convenient to check if the total number of outdoor units which are installed matches the total number of outdoor units which are recognised by the system. In case there is a mismatch, it is recommended to check the communication wiring path between outdoor and outdoor units (Q1/Q2 communication line).

[1-17] [1-18] [1-19]

Shows:

- [1-17]: The latest malfunction code.
- [1-18]: The 2nd last malfunction code.
- [1-19]: The 3rd last malfunction code.

When the latest malfunction codes were reset by accident on an indoor unit user interface, they can be checked again through this monitoring settings.

For the content or reason behind the malfunction code see "10.2 Solving problems based on error codes" on page 50, where most relevant malfunction codes are explained. Detailed information about malfunction codes can be consulted in the service manual of this unit.

[1-29] [1-30] [1-31]

Show the result of the leak detection function:

- ___: No data.
- Err: Leak detection failure due to abnormal operation.
- oH : No leak detected.
- nG : Leak detected.

For instructions on how to use the leak detection function, see "7.4 Using the leak detection function" on page 46.

[1-34]

Shows the remaining days till the next automatic leak detection (if automatic leak detection function is activated).

When the automatic leak detection function was activated through mode 2 settings, it is possible to see within how many days, the automatic leak detection will be performed. Depending on the field setting chosen, the automatic leak detection function can be programmed one time into the future or on perpetual basis.

Indication is given in remaining days and is between 0 and 365 days.

[1-39]

Shows:

- The number of Hydrobox (HXY080/125 and HXHD) indoor units connected to the system.

[1-40] [1-41]

Shows:

- [1-40]: The current cooling comfort setting.
- [1-41]: The current heating comfort setting.

See "7.3 Energy saving and optimum operation" on page 44 for more details about this setting.

7.2.8 Mode 2: Field settings

[2-8]

T_e target temperature during cooling operation.

[2-8]	T_e target (°C)
0 (default)	Auto
2	6
3	7
4	8
5	9
6	10
7	11

For more information and advice about the impact of these settings, see "7.3 Energy saving and optimum operation" on page 44.

[2-9]

T_c target temperature during heating operation.

[2-9]	T_c target (°C)
0 (default)	Auto
1	41
2	42
3	43
4	44
5	45
6	46

For more information and advice about the impact of these settings, see "7.3 Energy saving and optimum operation" on page 44.

[2-12]

Enable the low noise function and/or power consumption limitation via external control adaptor (DTA104A61/62).

If the system needs to be running under low noise operation or under power consumption limitation conditions when an external signal is sent to the unit, this setting should be changed. This setting will only be effective when the optional external control adaptor (DTA104A61/62) is installed.

[2-12]	Description
0 (default)	Deactivated.
1	Activated.

[2-14]

Input additional refrigerant amount that was charged.

In case you want to use the automatic leak detection functionality, it is required to input the total additional refrigerant charge amount.

[2-14]	Additional amount charged (kg)
0 (default)	No input
1	0<x<5
2	5<x<10
3	10<x<15
4	15<x<20
5	20<x<25
6	25<x<30
7	30<x<35
8	35<x<40
9	40<x<45
10	45<x<50
11	50<x<55
12	55<x<60
13	60<x<65
14	65<x<70
15	70<x<75
16	75<x<80
17	80<x<85
18	85<x<90
19	Setting cannot be used. Total refrigerant charge has to be <100 kg.
20	
21	

- For details concerning the charging procedure, see "6.7.2 About charging refrigerant" on page 28.
- For details concerning the calculation of additional refrigerant charge amount, see "6.7.3 To determine the additional refrigerant amount" on page 28.
- For guidance concerning the input of the additional refrigerant charge amount and leak detection function see "7.4 Using the leak detection function" on page 46.

[2-18]

Fan high static pressure setting.

In order to increase the static pressure the outdoor unit fan is delivering, this setting should be activated. For details about this setting, see technical specifications.

[2-18]	Description
0 (default)	Deactivated.
1	Activated.

[2-20]

Manual additional refrigerant charge.

In order to add the additional refrigerant charge amount in a manual way (without automatic refrigerant charging functionality), following setting should be applied. Further instructions regarding the different ways to charge additional refrigerant into your system can be found in chapter "6.7.2 About charging refrigerant" on page 28.

[2-20]	Description
0 (default)	Deactivated.
1	Activated. To stop the manual additional refrigerant charge operation (when the required additional refrigerant amount is charged), push BS3. If this function was not aborted by pushing BS3, the unit will stop its operation after 30 minutes. If 30 minutes was not sufficient to add the needed refrigerant amount, the function can be reactivated by changing the field setting again.

[2-22]

Automatic low noise setting and level during night time.

By changing this setting, you activate the automatic low noise operation function of the unit and define the level of operation. Depending on the chosen level, the noise level will be lowered. The start and stop moments for this function are defined under setting [2-26] and [2-27].

[2-22]	Description	
0 (default)	Deactivated	
1	Level 1	Level 3<Level 2<Level 1
2	Level 2	
3	Level 3	

[2-25]

Low noise operation level via the external control adaptor.

If the system needs to be running under low noise operation conditions when an external signal is sent to the unit, this setting defines the level of low noise that will be applied.

This setting will only be effective when the optional external control adaptor (DTA104A61/62) is installed and the setting [2-12] was activated.

[2-25]	Description	
1	Level 1	Level 3<Level 2<Level 1
2 (default)	Level 2	
3	Level 3	

[2-26]

Low noise operation start time.

This setting is used in conjunction with setting [2-22].

[2-26]	Start time automatic low noise operation (approximately)
1	20h00
2 (default)	22h00
3	24h00

[2-27]

Low noise operation stop time.

This setting is used in conjunction with setting [2-22].

[2-27]	Stop time automatic low noise operation (approximately)
1	6h00
2	7h00
3 (default)	8h00

[2-30]

Power consumption limitation level (step 1) via the external control adaptor (DTA104A61/62).

If the system needs to be running under power consumption limitation conditions when an external signal is sent to the unit, this setting defines the level power consumption limitation that will be applied for step 1. The level is according to the table.

[2-30]	Power consumption limitation (approximately)
1	60%
2	65%
3 (default)	70%
4	75%
5	80%
6	85%
7	90%
8	95%

[2-31]

Power consumption limitation level (step 2) via the external control adaptor (DTA104A61/62).

If the system needs to be running under power consumption limitation conditions when an external signal is sent to the unit, this setting defines the level power consumption limitation that will be applied for step 2. The level is according to the table.

[2-31]	Power consumption limitation (approximately)
1 (default)	40%
2	50%
3	55%

[2-32]

Forced, all time, power consumption limitation operation (no external control adaptor is required to perform power consumption limitation).

If the system always needs to be running under power consumption limitation conditions, this setting activates and defines the level power consumption limitation that will be applied continuously. The level is according to the table.

[2-32]	Restriction reference
0 (default)	Function not active.
1	Follows [2-30] setting.

[2-32]	Restriction reference
2	Follows [2-31] setting.

[2-35]

Height difference setting.

[2-35]	Description
0	In case the outdoor unit is installed in the lowest position (indoor units are installed on a higher position than outdoor units) and the height difference between the highest indoor unit and the outdoor unit exceeds 40 m, the setting [2-35] should be changed to 0.
1 (default)	—

Other changes/limitations to the circuit apply. For more information see "5.3.5 Single outdoor units and standard multi-outdoor-unit combinations >20 HP" on page 16 and "5.3.6 Standard multi-outdoor-unit combinations ≤20 HP and free multi-outdoor-unit combinations" on page 17.

[2-45]

Technical cooling.

[2-45]	Description
0 (default)	No technical cooling available
1	Technical cooling available

For more information about this setting, refer to the service manual.

[2-47]

T_e target temperature during heat recovery operation.

[2-47]	T_e target (°C)
0 (default)	Auto
2	6
3	7
4	8
5	9
6	10
7	11

[2-49]

Height difference setting.

[2-49]	Description
0 (default)	—
1	In case the outdoor unit is installed in the highest position (indoor units are installed on a lower position than outdoor units) and the height difference between the lowest indoor unit and the outdoor unit exceeds 50 m, the setting [2-49] has to be changed to 1.

Other changes/limitations to the circuit apply. For more information see "5.3.5 Single outdoor units and standard multi-outdoor-unit combinations >20 HP" on page 16 and "5.3.6 Standard multi-outdoor-unit combinations ≤20 HP and free multi-outdoor-unit combinations" on page 17.

[2-81]

Cooling comfort setting.

This setting is used in conjunction with setting [2-8].

[2-81]	Cooling comfort setting
0	Eco
1 (default)	Mild
2	Quick
3	Powerful

For more information and advice about the impact of these settings, see "7.3 Energy saving and optimum operation" on page 44.

[2-82]

Heating comfort setting.

This setting is used in conjunction with setting [2-9].

[2-82]	Heating comfort setting
0	Eco
1 (default)	Mild
2	Quick
3	Powerful

For more information and advice about the impact of these settings, see "7.3 Energy saving and optimum operation" on page 44.

[2-85]

Automatic leak detection interval time.

This setting is used in conjunction with setting [2-86].

[2-85]	Time between automatic leak detection executions (days)
0 (default)	365
1	180
2	90
3	60
4	30
5	7
6	1

[2-86]

Automatic leak detection activation.

When you want to use the automatic leak detection function you have to activate this setting. By activating setting [2-86], the automatic leak detection will be executed depending on the defined value setting. The timing for the next automatic refrigerant leak detection is subject to setting [2-85]. The automatic leak detection will be executed in [2-85] days.

Each time when the automatic leak detection function was executed the system will stay idle until it is restarted by manual thermo ON request or by next scheduled action.

[2-86]	Description
0 (default)	No leak detection planned.
1	Leak detection planned once in [2-85] days.
2	Leak detection planned every [2-85] days.

7.2.9 To connect the PC configurator to the outdoor unit

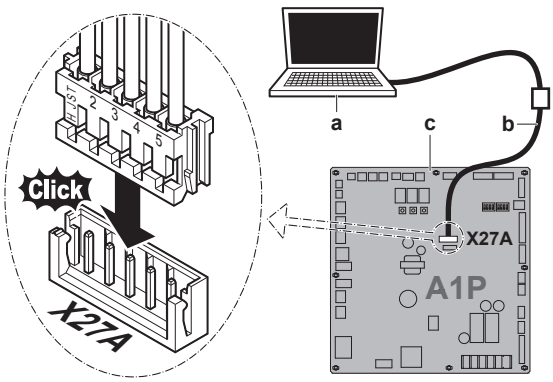

a PC
b Cable (EKPCCAB)
c Outdoor unit main PCB

7.3 Energy saving and optimum operation

This VRV IV heat recovery system is equipped with advanced energy saving functionality. Depending on the priority, emphasises can be put on energy saving or comfort level. Several parameters can be selected, resulting in the optimal balance between energy consumption and comfort for the particular application.

Several patterns are available and explained below. Modify the parameters to the needs of your building and to realize the best balance between energy consumption and comfort.

No matter which control is selected, variations on the behaviour of the system are still possible due to protection controls to keep the unit operating under reliable conditions. The intentional target, however, is fixed and will be used to obtain the best balance between energy consumption and comfort, depending on the application type.

Care should be taken about selection procedures and system setups, especially when using Hydrobox units. The requested leaving water temperature from the Hydrobox has priority over this energy saving control, as it is related to the required water temperature.

7.3.1 Available main operation methods

Basic

The refrigerant temperature is fixed independent from the situation. It corresponds to the standard operation which is known and can be expected from/under previous VRV systems.

To activate this in…	Change…
Cooling operation	[2-8]=2
Heating operation	[2-9]=6

Automatic

The refrigerant temperature is set depending on the outdoor ambient conditions. As such adjusting the refrigerant temperature to match the required load (which is also related to the outdoor ambient conditions).

E.g., when your system is operating in cooling, you do not need as much cooling under low outdoor ambient temperatures (e.g., 25°C) as under high outdoor ambient temperatures (e.g., 35°C). Using this idea, the system automatically starts increasing its refrigerant temperature, automatically reducing the delivered capacity and increasing the system's efficiency.

E.g., when your system is operating in heating, you do not need as much heating under high outdoor ambient temperatures (e.g., 15°C) as under low outdoor ambient temperatures (e.g., –5°C). Using this idea, the system automatically starts decreasing its refrigerant temperature, automatically reducing the delivered capacity and increasing the system's efficiency.

To activate this in…	Change…
Cooling operation	[2-8]=0 (default)
Heating operation	[2-9]=0 (default)

Hi-sensible/economic (cooling/heating)

The refrigerant temperature is set higher/lower (cooling/heating) compared to basic operation. The focus under high sensible mode is comfort feeling for the customer.

The selection method of indoor units is important and has to be considered as the available capacity is not the same as under basic operation.

For details concerning to Hi-sensible applications, please contact your dealer.

To activate this in…	Change…
Cooling operation	[2-8] to the appropriate value, matching the requirements of the pre-designed system containing a high sensible solution.
Heating operation	[2-9] to the appropriate value, matching the requirements of the pre-designed system containing a high sensible solution.

[2-8]	T_e target (°C)
3	7
4	8
5	9
6	10
7	11

[2-9]	T_c target (°C)
1	41
3	43

7.3.2 Available comfort settings

For each of above modes a comfort level can be selected. The comfort level is related to the timing and the effort (energy consumption) which is put in achieving a certain room temperature by temporarily changing the refrigerant temperature to different values in order to achieve requested conditions more quickly.

Powerful

Overshoot (during heating operation) or undershoot (during cooling operation) is allowed compared to the requested refrigerant temperature, in order to achieve the required room temperature very fast. The overshoot is allowed from the start up moment.

- In case of cooling operation the evaporating temperature is allowed to go down to 3°C on temporary base depending on the situation.
- In case of heating operation the condense temperature is allowed to go up to 49°C on temporary base depending on the situation.
- When the request from the indoor units becomes more moderate, the system will eventually go to the steady state condition which is defined by the operation method above.

To activate this in…	Change…
Cooling operation	[2-81]=3. This setting is used in conjunction with setting [2-8].
Heating operation	[2-82]=3. This setting is used in conjunction with setting [2-9]

Quick

Overshoot (during heating operation) or undershoot (during cooling operation) is allowed compared to the requested refrigerant temperature, in order to achieve the required room temperature very fast. The overshoot is allowed from the start up moment.

- In case of cooling operation the evaporating temperature is allowed to go down to 6°C on temporary base depending on the situation.
- In case of heating operation the condense temperature is allowed to go up to 46°C on temporary base depending on the situation.

- When the request from the indoor units becomes more moderate, the system will eventually go to the steady state condition which is defined by the operation method above.

To activate this in…	Change…
Cooling operation	[2-81]=2. This setting is used in conjunction with setting [2-8].
Heating operation	[2-82]=2. This setting is used in conjunction with setting [2-9].

Mild

Overshoot (during heating operation) or undershoot (during cooling operation) is allowed compared to the requested refrigerant temperature, in order to achieve the required room temperature very fast. The overshoot is not allowed from the start up moment. The start up occurs under the condition which is defined by the operation mode above.

- In case of cooling operation the evaporating temperature is allowed to go down to 6°C on temporary base depending on the situation.
- In case of heating operation the condense temperature is allowed to go up to 46°C on temporary base depending on the situation.
- When the request from the indoor units becomes more moderate, the system will eventually go to the steady state condition which is defined by the operation method above.
- The start up condition is different from the powerful and quick comfort setting.

To activate this in…	Change…
Cooling operation	[2-81]=1. This setting is used in conjunction with setting [2-8].
Heating operation	[2-82]=1. This setting is used in conjunction with setting [2-9].

Eco

The original refrigerant temperature target, which is defined by the operation method (see above) is kept without any correction, unless for protection control.

To activate this in…	Change…
Cooling operation	[2-81]=0. This setting is used in conjunction with setting [2-8].
Heating operation	[2-82]=0. This setting is used in conjunction with setting [2-9].

7.3.3 Example: Automatic mode during cooling

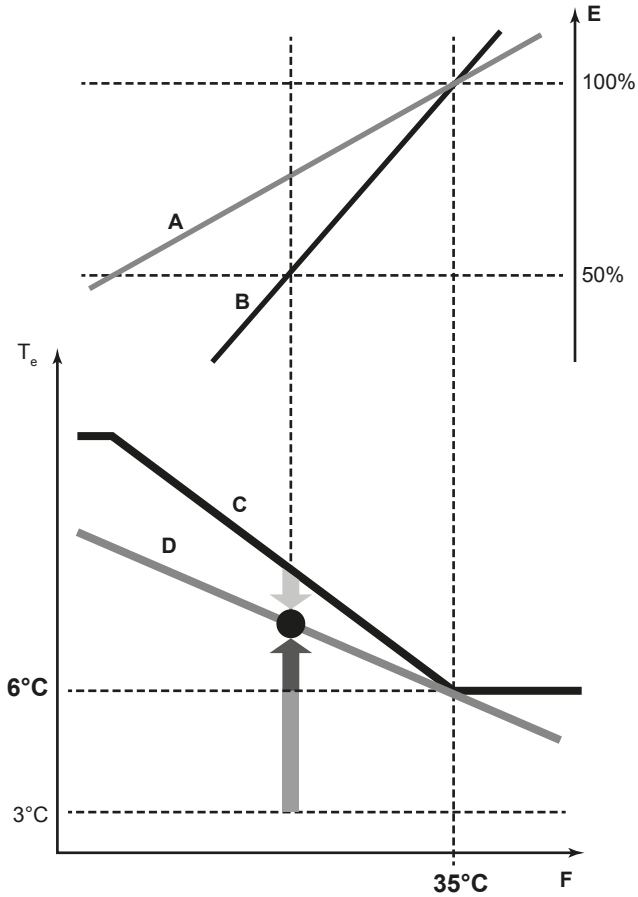

A Actual load curve
B Virtual load curve (initial capacity automatic mode)
C Virtual target value (initial evaporation temperature value automatic mode)
D Required evaporation temperature value
E Load factor
F Outside air temperature
T_e Evaporating temperature
Quick
Powerful
Mild

Room temperature evolution:

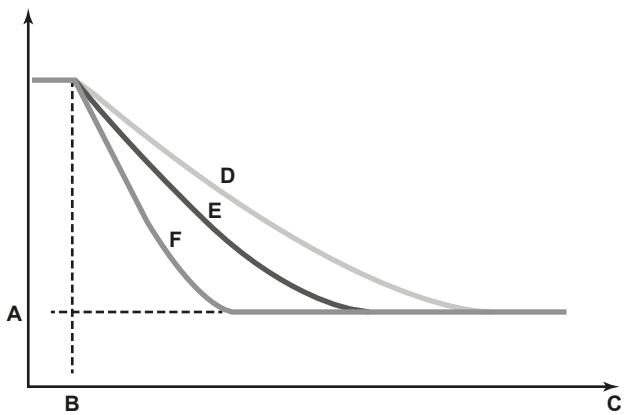

A Indoor unit set temperature
B Operation start
C Operating time
D Mild
E Quick
F Powerful

7.3.4 Example: Automatic mode during heating

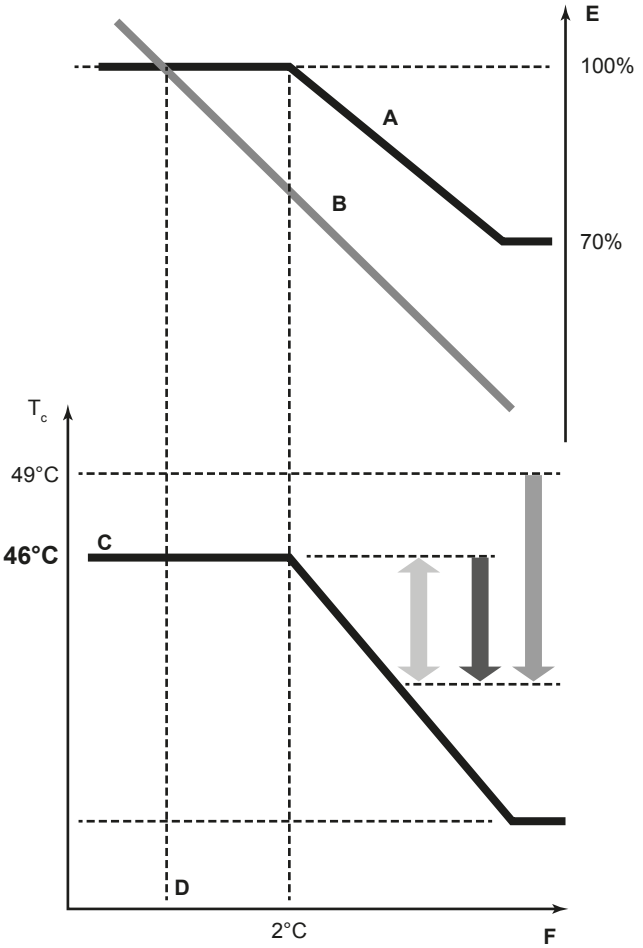

- **A** Virtual load curve (default automatic mode peak capacity)
- **B** Load curve
- **C** Virtual target value (initial condensation temperature value automatic mode)
- **D** Design temperature
- **E** Load factor
- **F** Outside air temperature
- **T_c** Condensing temperature
- Quick
- Powerful
- Mild

Room temperature evolution:

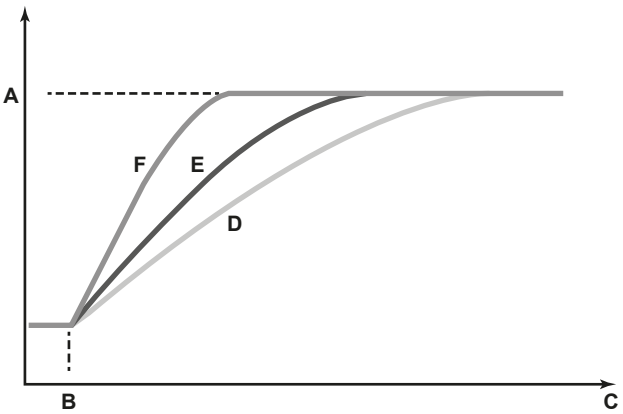

- **A** Indoor unit set temperature
- **B** Operation start
- **C** Operating time
- **D** Mild
- **E** Quick
- **F** Powerful

7.4 Using the leak detection function

7.4.1 About automatic leak detection

The (automatic) leak detection function is not by default activated and can only start working when the additional refrigerant charge is inputted into the system's logic (see [2-14]).

The leak detection operation can be automated. By changing parameter [2-85] to chosen value, the interval time or the time till the next automatic leak detection operation can be chosen. The parameter [2-86] defines whether the leak detection operation is executed one time (within [2-85] days) or intermittent, respecting an interval of [2-85] days.

Availability of the leak detection function feature requires input of the additional refrigerant charge amount immediately after finishing the charging. The input must be executed before performing the test operation.

INFORMATION

- The weighed and already recorded amount of additional refrigerant charge (not the total amount of refrigerant present in the system) must be entered.
- The leak detection function is not available when Hydrobox units are connected to the system.
- When the height difference between indoor units is ≥50/40 m, the leak detection function can not be used.

7.4.2 To manually perform a leak detection

When the leak detection function was initially not required, but its activation is wanted at a later moment, input the additional refrigerant charge into the system's logic.

Executing the leak detection function one time at site can also be done by following procedure.

1. Push BS2 one time.
2. Push BS2 one more time.
3. Push BS2 5 seconds.
4. Leak detection function will start. To abort leak detection operation, push BS1.

Result: When the manual leak detection is finished, the result is shown on the outdoor unit 7-segment display. The indoor units are in locked state (centralised control symbol). To return to normal state, push BS1.

Display	Meaning
oH	No leak detected
nG	Leak detected

Information codes:

Code	Description
E-1	Unit is not prepared to execute leak detection operation (refer to requirements to be able to execute leak detection operation).
E-2	Indoor unit is out of temperature range for leak detection operation.
E-3	Outdoor unit is out of temperature range for leak detection operation.
E-4	Too low pressure was noticed during leak detection operation. Restart leak detection operation.
E-5	Indicates an indoor unit which is not compatible with leak detection functionality is installed (e.g. Hydrobox units, …).

Result of leak detection operation is informed in [1-35] and [1-29].

Steps during leak detection:

Display	Steps
t00	Preparation[(a)]
t01	Pressure equalisation
t02	Start up
t04	Leak detection operation
t06	Standby[(b)]
t07	Leak detection operation is finished

(a) If the indoor temperature is too low, first the heating operation will start.
(b) If the indoor temperature is lower than 15°C due to leak detection operation and the outdoor temperature is lower than 20°C, the heating operation will start to maintain basic comfort heating level.

8 Commissioning

8.1 Overview: Commissioning

After installation and once the field settings are defined, the installer is obliged to verify correct operation. Therefore a test run MUST be performed according to the procedures described below.

This chapter describes what you have to do and know to commission the system after it is configured.

Commissioning typically consists of the following stages:

1 Checking the "Checklist before commissioning".
2 Performing a test run.
3 If necessary, correcting errors after abnormal completion of the test run.
4 Operating the system.

8.2 Precautions when commissioning

DANGER: RISK OF ELECTROCUTION

DANGER: RISK OF BURNING

CAUTION

Do NOT perform the test operation while working on the indoor units.

When performing the test operation, NOT only the outdoor unit, but the connected indoor unit will operate as well. Working on an indoor unit while performing a test operation is dangerous.

CAUTION

Do NOT insert fingers, rods or other objects into the air inlet or outlet. Do NOT remove the fan guard. When the fan is rotating at high speed, it will cause injury.

NOTICE

Test run is possible for ambient temperatures between –20°C and 35°C.

INFORMATION

During the first running period of the unit, the required power may be higher than stated on the nameplate of the unit. This phenomenon is caused by the compressor, that needs a continuous run time of 50 hours before reaching smooth operation and stable power consumption.

NOTICE

Be sure to turn on the power 6 hours before operation in order to have power running to the crankcase heater and to protect the compressor.

During test operation, the outdoor unit and the indoor units will start up. Make sure that the preparations of all indoor units are finished (field piping, electrical wiring, air purge, ...). See installation manual of the indoor units for details.

8.3 Checklist before commissioning

After the installation of the unit, first check the following items. Once all below checks are fulfilled, the unit MUST be closed, ONLY then can the unit be powered up.

☐	You read the complete installation and operation instructions, as described in the **installer and user reference guide**.
☐	**Installation** Check that the unit is properly installed, to avoid abnormal noises and vibrations when starting up the unit.
☐	**Field wiring** Be sure that the field wiring has been carried out according to the instructions described in the chapter "6.8 Connecting the electrical wiring" on page 34, according to the wiring diagrams and according to the applicable legislation.
☐	**Power supply voltage** Check the power supply voltage on the local supply panel. The voltage MUST correspond to the voltage on the identification label of the unit.
☐	**Earth wiring** Be sure that the earth wires have been connected properly and that the earth terminals are tightened.
☐	**Insulation test of the main power circuit** Using a megatester for 500 V, check that the insulation resistance of 2 MΩ or more is attained by applying a voltage of 500 V DC between power terminals and earth. NEVER use the megatester for the transmission wiring.
☐	**Fuses, circuit breakers, or protection devices** Check that the fuses, circuit breakers, or the locally installed protection devices are of the size and type specified in the chapter "5.4.2 Safety device requirements" on page 20. Be sure that neither a fuse nor a protection device has been bypassed.
☐	**Internal wiring** Visually check the electrical component box and the inside of the unit on loose connections or damaged electrical components.
☐	**Pipe size and pipe insulation** Be sure that correct pipe sizes are installed and that the insulation work is properly executed.
☐	**Stop valves** Be sure that the stop valves are open on both liquid and gas side.
☐	**Damaged equipment** Check the inside of the unit on damaged components or squeezed pipes.

☐	**Refrigerant leak** Check the inside of the unit on refrigerant leakage. If there is a refrigerant leak, try to repair the leak. If the repair is unsuccessful, call your local dealer. Do not touch any refrigerant which has leaked out from refrigerant piping connections. This may result in frostbite.
☐	**Oil leak** Check the compressor for oil leakage. If there is an oil leak, try to repair the leak. If the repairing is unsuccessful, call your local dealer.
☐	**Air inlet/outlet** Check that the air inlet and outlet of the unit is NOT obstructed by paper sheets, cardboard, or any other material.
☐	**Additional refrigerant charge** The amount of refrigerant to be added to the unit shall be written on the included "Added refrigerant" plate and attached to the rear side of the front cover.
☐	**Installation date and field setting** Be sure to keep record of the installation date on the sticker on the rear of the upper front panel according to EN60335-2-40 and keep record of the contents of the field setting(s).

8.4 About the test run

The procedure below describes the test operation of the complete system. This operation checks and judges following items:

- Check for incorrect wiring (communication check with indoor units).
- Check of the stop valves opening.
- Judgement of piping length.

In case Hydrobox units are present in the system, the pipe length check and the refrigerant situation check will not be performed.

- Make sure to carry out the system test operation after the first installation. Otherwise, the malfunction code U3 will be displayed on the user interface and normal operation or individual indoor unit test run cannot be carried out.
- Abnormalities on indoor units cannot be checked for each unit separately. After the test operation is finished, check the indoor units one by one by performing a normal operation using the user interface. Refer to the indoor unit installation manual for more details (e.g., Hydrobox) concerning the individual test run.

INFORMATION

- It may take 10 minutes to achieve a uniform refrigerant state before the compressor starts.
- During the test operation, the refrigerant running sound or the magnetic sound of a solenoid valve may become loud and the display indication may change. These are not malfunctions.

8.5 To perform a test run

1. Close all front panels in order to not let it be the cause of misjudgement (except the electrical component box inspection opening service cover).
2. Make sure all field settings you want are set; see "7.2 Making field settings" on page 38.
3. Turn ON the power to the outdoor unit and the connected indoor units.

NOTICE

Be sure to turn on the power 6 hours before operation in order to have power running to the crankcase heater and to protect the compressor.

4. Make sure the default (idle) situation is existing; see "7.2.4 To access mode 1 or 2" on page 39. Push BS2 for 5 seconds or more. The unit will start test operation.

   Result: The test operation is automatically carried out, the outdoor unit display will indicate "t01" and the indication "Test operation" and "Under centralised control" will display on the user interface of indoor units.

Steps during the automatic system test run procedure:

Step	Description
t01	Control before start up (pressure equalisation)
t02	Cooling start up control
t03	Cooling stable condition
t04	Communication check
t05	Stop valve check
t06	Pipe length check
t07	Refrigerant amount check
t09	Pump down operation
t10	Unit stop

Note: During the test operation, it is not possible to stop the unit operation from a user interface. To abort the operation, press BS3. The unit will stop after ±30 seconds.

5. Check the test operation results on the outdoor unit 7-segment display.

Completion	Description
Normal completion	No indication on the 7-segment display (idle).
Abnormal completion	Indication of malfunction code on the 7-segment display. Refer to "8.6 Correcting after abnormal completion of the test run" on page 48 to take actions for correcting the abnormality. When the test operation is fully completed, normal operation will be possible after 5 minutes.

8.6 Correcting after abnormal completion of the test run

The test operation is only completed if there is no malfunction code displayed on the user interface or outdoor unit 7-segment display. In case of a displayed malfunction code, perform correcting actions as explained in the malfunction code table. Carry out the test operation again and confirm that the abnormality is properly corrected.

INFORMATION

Refer to the installation manual of the indoor unit for detailed malfunction codes related to indoor units.

8.7 Operating the unit

Once the unit is installed and test operation of outdoor unit and indoor units is finished, the operation of the system can start.

For operating the indoor unit, the user interface of the indoor unit should be switched ON. Refer to the indoor unit operation manual for more details.

9 Maintenance and service

NOTICE

Maintenance MUST be done by an authorized installer or service agent.

We recommend performing maintenance at least once a year. However, applicable legislation might require shorter maintenance intervals.

NOTICE

In Europe, the **greenhouse gas emissions** of the total refrigerant charge in the system (expressed as tonnes CO_2 equivalent) is used to determine the maintenance intervals. Follow the applicable legislation.

Formula to calculate the greenhouse gas emissions: GWP value of the refrigerant × Total refrigerant charge [in kg] / 1000

9.1 Overview: Maintenance and service

This chapter contains information about:

- Preventing electrical hazards when maintaining and servicing the system
- The refrigerant recovery operation

9.2 Maintenance safety precautions

DANGER: RISK OF ELECTROCUTION

DANGER: RISK OF BURNING

NOTICE: Risk of electrostatic discharge

Before performing any maintenance or service work, touch a metal part of the unit in order to eliminate static electricity and to protect the PCB.

9.2.1 To prevent electrical hazards

When performing service to inverter equipment:

1. Do NOT open the electrical component box cover for 10 minutes after the power supply is turned off.
2. Measure the voltage between terminals on the terminal block for power supply with a tester and confirm that the power supply is shut off. In addition, measure points as shown in the figure, with a tester and confirm that the voltage of the capacitor in the main circuit is less than 50 V DC.

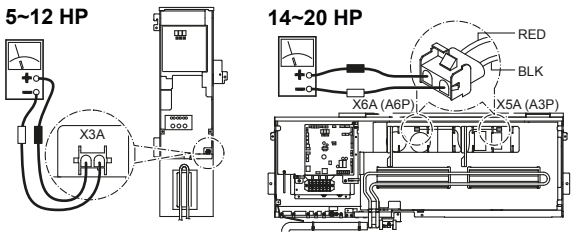

3. To prevent damaging the PCB, touch a non-coated metal part to eliminate static electricity before pulling out or plugging in connectors.
4. Pull out junction connectors X1A, X2A (X3A, X4A) for the fan motors in the outdoor unit before starting service operation on the inverter equipment. Be careful not to touch the live parts. (If a fan rotates due to strong wind, it may store electricity in the capacitor or in the main circuit and cause electric shock.)
5. After the service is finished, plug the junction connector back in. Otherwise the malfunction code E7 will be displayed on the user interface or on the outdoor unit 7-segment display and normal operation will not be performed.

For details refer to the wiring diagram labelled on the back of the electrical component box cover.

Pay attention to the fan. It is dangerous to inspect the unit while the fan is running. Make sure to turn off the main switch and to remove the fuses from the control circuit located in the outdoor unit.

9.3 About service mode operation

Refrigerant recovery operation/vacuuming operation is possible by applying setting [2-21]. Refer to "7.2 Making field settings" on page 38 for details how to set mode 2.

When vacuuming/recovery mode is used, check very carefully what should be vacuumed/recovered before starting. See installation manual of the indoor unit for more information about vacuuming and recovery.

9.3.1 To use vacuum mode

1. When the unit is at standstill, set the unit in [2-21]=1.

   Result: When confirmed, the indoor and outdoor unit expansion valves will fully open. At that moment the 7-segment display indication=t01 and the user interface of all indoor units indicate TEST (test operation) and (external control) and the operation will be prohibited.
2. Evacuate the system with a vacuum pump.
3. Press BS3 to stop vacuuming mode.

9.3.2 To recover refrigerant

This should be done by a refrigerant reclaimer. Follow the same procedure as for vacuuming method.

DANGER: RISK OF EXPLOSION

Pump down – Refrigerant leakage. If you want to pump down the system, and there is a leak in the refrigerant circuit:

- Do NOT use the unit's automatic pump down function, with which you can collect all refrigerant from the system into the outdoor unit. **Possible consequence:** Self-combustion and explosion of the compressor because of air going into the operating compressor.
- Use a separate recovery system so that the unit's compressor does NOT have to operate.

NOTICE

Make sure to NOT recover any oil while recovering refrigerant. **Example:** By using an oil separator.

10 Troubleshooting

10.1 Overview: Troubleshooting

This chapter describes what you have to do in case of problems.

It contains information about:

- Solving problems based on error codes

10.2 Solving problems based on error codes

In case of a displayed malfunction code, perform correcting actions as explained in the malfunction code table.

After correcting the abnormality, press BS3 to reset the malfunction code and retry operation.

The malfunction code which is displayed on the outdoor unit will indicate a main malfunction code and a sub code. The sub code indicates more detailed information about the malfunction code. The malfunction code will be displayed intermittent.

Example:

Code	Example
Main code	E3
Sub code	-01

With an interval of 1 second, the display will switch between main code and sub code.

10.3 Error codes: Overview

Main code	Sub code			Cause	Solution
	Master	Slave 1	Slave 2		
E3	-01	-03	-05	High pressure switch was activated (S1PH, S2PH) – main PCB (X2A, X3A)	Check stop valve situation or abnormalities in (field) piping or airflow over air cooled coil.
	-02	-04	-06	▪ Refrigerant overcharge ▪ Stop valve closed	▪ Check refrigerant amount+recharge unit. ▪ Open stop valves
	-13	-14	-15	Stop valve closed (liquid)	Open liquid stop valve.
	-18			▪ Refrigerant overcharge ▪ Stop valve closed	▪ Check refrigerant amount+recharge unit. ▪ Open stop valves.
E4	-01	-02	-03	Low pressure malfunction: ▪ Stop valve closed ▪ Refrigerant shortage ▪ Indoor unit malfunction	▪ Open stop valves. ▪ Check refrigerant amount+recharge unit. ▪ Check the user interface's display or transmission wiring between the outdoor unit and the indoor unit.
E9	-01	-05	-08	Electronic expansion valve malfunction (upper heat exchanger) (Y1E) – main PCB (X21A)	Check connection on PCB or actuator.
	-04	-07	-10	Electronic expansion valve malfunction (lower heat exchanger) (Y3E) – main PCB (X23A)	Check connection on PCB or actuator.
	-03	-06	-09	Electronic expansion valve malfunction (subcool heat exchanger) (Y2E) – main PCB (X22A)	Check connection on PCB or actuator
	-26	-27	-28	Electronic expansion valve malfunction (receiver gas) (Y4E) – main PCB (X25A)	Check connection on PCB or actuator.
	-29	-34	-39	Electronic expansion valve malfunction (inverter cooling) (Y5E) – sub PCB (X8A)	Check connection on PCB or actuator.
	-31	-36	-41	Electronic expansion valve malfunction (auto charge) (Y6E) - sub PCB (X10A)	Check connection on PCB or actuator.
F3	-01	-03	-05	Discharge temperature too high (R21T/R22T) – main PCB (X19A): ▪ Stop valve closed ▪ Refrigerant shortage	▪ Open stop valves. ▪ Check refrigerant amount+recharge unit.
	-20	-21	-22	Compressor casing temperature too high (R15T) – main PCB (X19A): ▪ Stop valve closed ▪ Refrigerant shortage	▪ Open stop valves. ▪ Check refrigerant amount+recharge unit.
F6	-02			▪ Refrigerant overcharge ▪ Stop valve closed	▪ Check refrigerant amount+recharge unit. ▪ Open stop valves.

Main code	Sub code			Cause	Solution
	Master	Slave 1	Slave 2		
H9	-01	-02	-03	Ambient temperature sensor malfunction (R1T) – main PCB (X18A)	Check connection on PCB or actuator.
J3	-16	-22	-28	Discharge temperature sensor malfunction (R21T): open circuit – main PCB (X19A)	Check connection on PCB or actuator.
	-17	-23	-29	Discharge temperature sensor malfunction (R21T): short circuit - main PCB (X19A)	Check connection on PCB or actuator.
	-18	-24	-30	Discharge temperature sensor malfunction (R22T): open circuit - main PCB (X19A)	Check connection on PCB or actuator.
	-19	-25	-31	Discharge temperature sensor malfunction (R22T): short circuit - main PCB (X19A)	Check connection on PCB or actuator.
	-47	-49	-51	Compressor casing temperature sensor malfunction (R8T): open circuit - main PCB (X19A)	Check connection on PCB or actuator.
	-48	-50	-52	Compressor casing temperature sensor malfunction (R8T): short circuit - main PCB (X19A)	Check connection on PCB or actuator.
J5	-01	-03	-05	Suction compressor temperature sensor (R12T) – sub PCB (X15A)	Check connection on PCB or actuator.
	-18	-19	-20	Suction temperature sensor (R10T) – main PCB (X29A)	Check connection on PCB or actuator.
J6	-01	-02	-03	Heat exchanger deicer temperature sensor (R11T) – sub PCB (X15A)	Check connection on PCB or actuator
	-08	-09	-10	Upper heat exchanger – gas - temperature sensor (R8T) – main PCB (X29A)	Check connection on PCB or actuator.
	-11	-12	-13	Lower heat exchanger – gas - temperature sensor (R9T) main PCB (X29A)	Check connection on PCB or actuator.
J7	-01	-02	-03	Liquid main - temperature sensor (R3T) – main PCB (X30A)	Check connection on PCB or actuator.
	-06	-07	-08	Subcool heat exchanger – liquid - temperature sensor (R7T) - main PCB (X30A)	Check connection on PCB or actuator.
J8	-01	-02	-03	Upper heat exchanger – liquid - temperature sensor (R4T) - main PCB (X30A)	Check connection on PCB or actuator.
	-08	-09	-10	Lower heat exchanger – liquid - temperature sensor (R5T) - main PCB (X30A)	Check connection on PCB or actuator.
	-11	-12	-13	Auto charge temperature sensor (R14T) – sub PCB (X15A)	Check connection on PCB or actuator.
J9	-01	-02	-03	Subcool heat exchanger – gas - temperature sensor (R6T) – main PCB (X30A)	Check connection on PCB or actuator.
	-11	-12	-13	Receiver gas temperature sensor (R13T) – sub PCB (X17A)	Check connection on PCB or actuator.
JA	-06	-08	-10	High pressure sensor malfunction (S1NPH): open circuit - main PCB (X32A)	Check connection on PCB or actuator.
	-07	-09	-11	High pressure sensor malfunction (S1NPH): short circuit - main PCB (X32A)	Check connection on PCB or actuator.
JC	-06	-08	-10	Low pressure sensor malfunction (S1NPL): open circuit - main PCB (X31A)	Check connection on PCB or actuator.
	-07	-09	-11	Low pressure sensor malfunction (S1NPL): short circuit - main PCB (X31A)	Check connection on PCB or actuator.

Main code	Sub code			Cause	Solution
	Master	Slave 1	Slave 2		
LC	-14	-15	-16	Transmission outdoor unit - inverter: INV1 transmission trouble - main PCB (X20A, X28A, X40A)	Check connection.
	-19	-20	-21	Transmission outdoor unit - inverter: FAN1 transmission trouble - main PCB (X20A, X28A, X40A)	Check connection.
	-24	-25	-26	Transmission outdoor unit - inverter: FAN2 transmission trouble - main PCB (X20A, X28A, X40A)	Check connection.
	-30	-31	-32	Transmission outdoor unit - inverter: INV2 transmission trouble - main PCB (X20A, X28A, X40A)	Check connection.
	-33	-34	-35	Transmission main PCB – sub PCB – main PCB (X20A), sub PCB (X2A, X3A)	Check connection.
P1	-01	-02	-03	INV1 unbalanced power supply voltage	Check if power supply is within range.
	-07	-08	-09	INV2 unbalanced power supply voltage	Check if power supply is within range.
U1	-01	-05	-07	Reversed power supply phase malfunction	Correct phase order.
	-04	-06	-08	Reversed power supply phase malfunction	Correct phase order.
U2	-01	-08	-11	INV1 voltage power shortage	Check if power supply is within range.
	-02	-09	-12	INV1 power phase loss	Check if power supply is within range.
	-22	-25	-28	INV2 voltage power shortage	Check if power supply is within range
	-23	-26	-29	INV2 power phase loss	Check if power supply is within range.
U3	-03			Malfunction code: system test run not yet executed (system operation not possible)	Execute system test run.
	-04			An error occurred during the test run	Re-execute the test run.
	-05, -06			Test run aborted	Re-execute the test run.
	-07, -08			Test run aborted due to communication issues	Check the communication wires and re-execute the test run.
U4	-01			Faulty wiring to Q1/Q2 or indoor - outdoor	Check (Q1/Q2) wiring.
	-03			Indoor unit communication error	Check user interface connection.
U7	-03, -04			Malfunction code: faulty wiring to Q1/Q2	Check Q1/Q2wiring.
	-11			Too many indoor units are connected to F1/F2 line	Check indoor unit amount and total capacity connected.
U9	-01			System mismatch. Wrong type of indoor units combined (R410A, R407C, Hydrobox, etc) Indoor unit malfunction	Check if other indoor units have malfunction and confirm indoor unit mix is allowed.
UA	-03			Connection malfunction over indoor units or type mismatch (R410A, R407C, Hydrobox, etc)	Check if other indoor units have malfunction and confirm indoor unit mix is allowed.
	-18			Connection malfunction over indoor units or type mismatch (R410A, R407C, Hydrobox, etc)	Check if other indoor units have malfunction and confirm indoor unit mix is allowed.
	-31			Wrong unit combination (multi system)	Check if unit types are compatible.
	-20			Wrong outdoor unit connected	Disconnect the outdoor unit.
	-27			No BS unit connected	Connect a BS unit.
	-28			Old BS unit connected	Disconnect the BS unit.
	-53			BS unit DIP switch abnormality	Check the DIP switches of the BS unit.
UH	-01			Auto address malfunction (inconsistency)	Check if transmission wired unit amount matches with powered unit amount (by monitor mode) or wait till initialisation is finished.

Main code	Sub code			Cause	Solution
	Master	Slave 1	Slave 2		
UF	-01			Auto address malfunction (inconsistency)	Check if transmission wired unit amount matches with powered unit amount (by monitor mode) or wait till initialisation is finished.
	-05			Stop valve closed or wrong (during system test run)	Open stop valves.
Auto charging related					
P2	—			Unusual low pressure on suction line	Close valve A immediately. Push BS1 to reset. Check following items before retrying autocharge procedure: ▪ Check if the gas side stop valve is opened correctly. ▪ Check if the valve of the refrigerant cylinder is opened. ▪ Check if the air inlet and outlet of the indoor unit are not obstructed.
P8	—			Freeze-up prevention indoor unit	Close valve A immediately. Push BS1 to reset. Retry autocharge procedure.
PE	—			Automatic charging nearly finished	Prepare for autocharge stopping.
P9	—			Automatic charging finished	Finish autocharge mode.
Leak detection function related					
E-1	—			Unit is not prepared to execute leak detection operation	Refer to requirements to be able to execute leak detection operation.
E-2	—			Indoor unit is out of temperature range for leak detection operation	Retry when ambient conditions are satisfied.
E-3	—			Outdoor unit is out of temperature range for leak detection operation	Retry when ambient conditions are satisfied.
E-4	—			Too low pressure was noticed during leak detection operation	Restart leak detection operation.
E-5	—			Indicates an indoor unit which is not compatible with leak detection functionality is installed (e.g. Hydrobox, …)	Refer to requirements to be able to execute leak detection operation.

11 Disposal

This unit uses hydrofluorocarbon. Contact your dealer when discarding this unit.

NOTICE

Do NOT try to dismantle the system yourself: dismantling of the system, treatment of the refrigerant, oil and other parts MUST comply with applicable legislation. Units MUST be treated at a specialised treatment facility for reuse, recycling and recovery.

12 Technical data

A **subset** of the latest technical data is available on the regional Daikin website (publicly accessible). The **full set** of latest technical data is available on the Daikin extranet (authentication required).

12.1 Overview: Technical data

This chapter contains information about:

- Dimensions
- Service space
- Components
- Piping diagram
- Wiring diagram
- Technical specifications
- Capacity table

12.2 Dimensions

5~12 HP

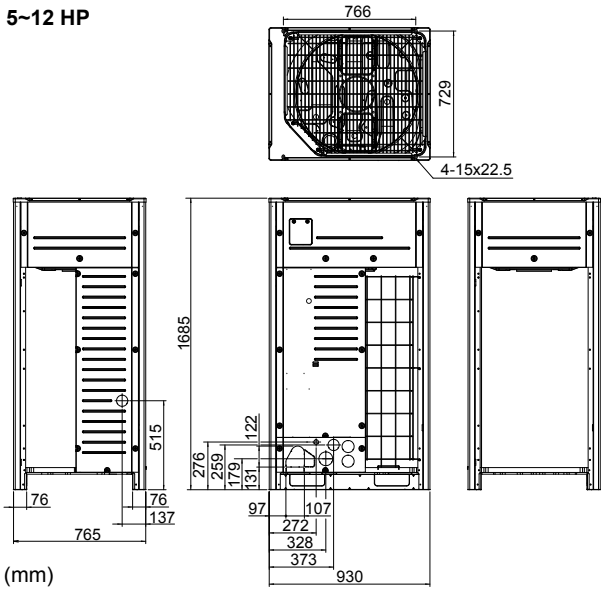

(mm)

14~20 HP

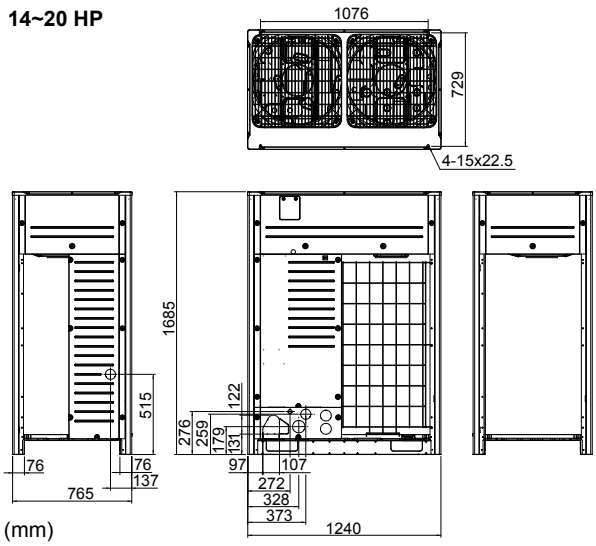

(mm)

12.3 Service space: Outdoor unit

Make sure the space around the unit is adequate for servicing and the minimum space for air inlet and air outlet is available (refer to the figure below and choose one of the possibilities).

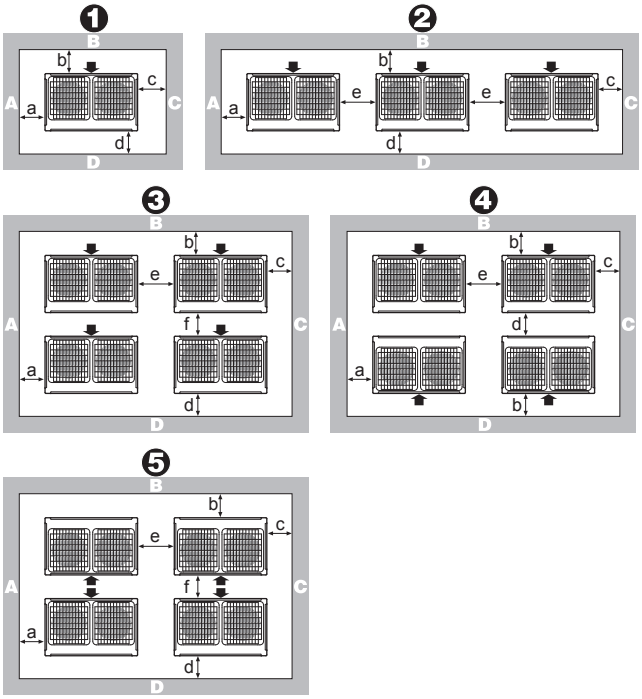

Layout	A+B+C+D		A+B
	Possibility 1	Possibility 2	
1	a≥10 mm b≥300 mm c≥10 mm d≥500 mm	a≥50 mm b≥100 mm c≥50 mm d≥500 mm	a≥200 mm b≥300 mm
2	a≥10 mm b≥300 mm c≥10 mm d≥500 mm e≥20 mm	a≥50 mm b≥100 mm c≥50 mm d≥500 mm e≥100 mm	a≥200 mm b≥300 mm e≥400 mm
3	a≥10 mm b≥300 mm c≥10 mm d≥500 mm e≥20 mm f≥600 mm	a≥50 mm b≥100 mm c≥50 mm d≥500 mm e≥100 mm f≥500 mm	—
4	a≥10 mm b≥300 mm c≥10 mm d≥500 mm e≥20 mm	a≥50 mm b≥100 mm c≥50 mm d≥500 mm e≥100 mm	
5	a≥10 mm b≥500 mm c≥10 mm d≥500 mm e≥20 mm f≥900 mm	a≥50 mm b≥500 mm c≥50 mm d≥500 mm e≥100 mm f≥600 mm	—

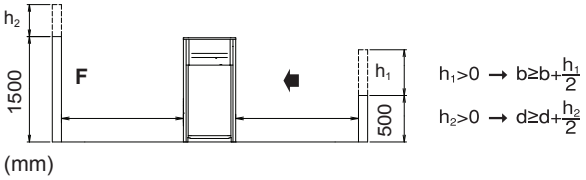

ABCD Sides along the installation site with obstacles
F Front side
➡ Suction side

- In case of an installation site where sides A+B+C+D have obstacles, the wall heights of sides A+C have no impact on service space dimensions. Refer to the figure above for impact of wall heights of sides B+D on service space dimensions.
- In case of an installation site where only the sides A+B have obstacles, the wall heights have no influence on any indicated service space dimensions.
- The installation space required on these drawings are for full load heating operation without considering possible ice accumulation. If the location of the installation is in a cold climate, then all dimensions above should be >500 mm to avoid accumulation of ice in between the outdoor units.

INFORMATION

The service space dimensions in above figure are based on cooling operation at 35°C ambient temperature (standard conditions).

INFORMATION

Further specifications can be found in the technical engineering data.

12.4 Components: Outdoor unit

Components: 5~12 HP

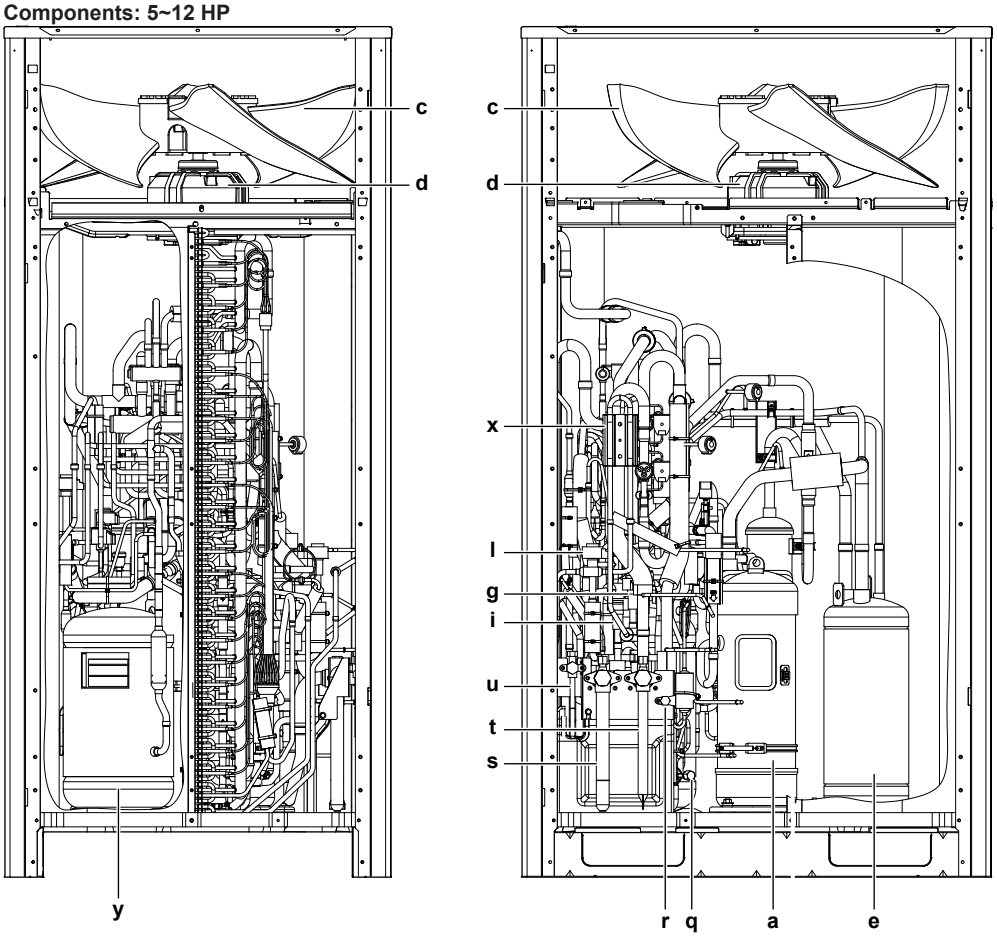

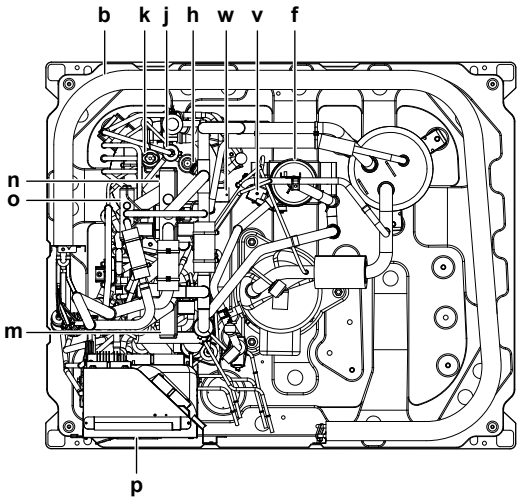

- **a** Compressor (M1C)
- **b** Heat exchanger
- **c** Propeller fan
- **d** Fan motor (M1F)
- **e** Accumulator
- **f** Oil separator
- **g** Electronic expansion valve (upper heat exchanger)
- **h** Electronic expansion valve (subcool heat exchanger)
- **i** Electronic expansion valve (lower heat exchanger)
- **j** Electronic expansion valve (receiver gas)
- **k** Electronic expansion valve (inverter cooling)
- **l** Electronic expansion valve (auto charge)
- **m** 4-way valve (high pressure/low pressure gas pipe)
- **n** 4-way valve (lower heat exchanger)
- **o** 4-way valve (upper heat exchanger)
- **p** Electrical component box
- **q** Service port
- **r** Charge port
- **s** Stop valve (gas)
- **t** Stop valve (high pressure/low pressure gas)
- **u** Stop valve (liquid)
- **v** Solenoid valve (M1C oil return)
- **w** Solenoid valve (liquid pipe)
- **x** Heat sink
- **y** Liquid receiver

Components: Outdoor unit 14~20 HP

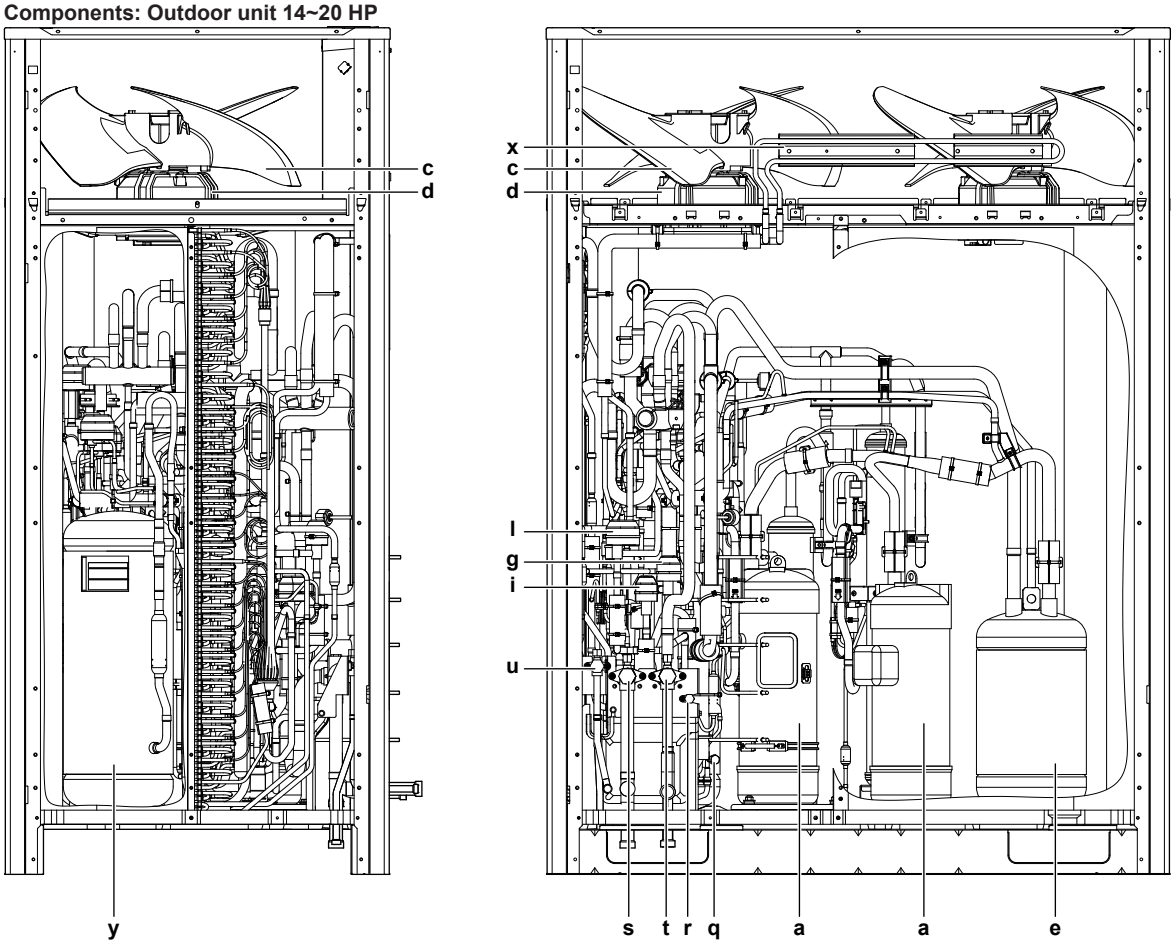

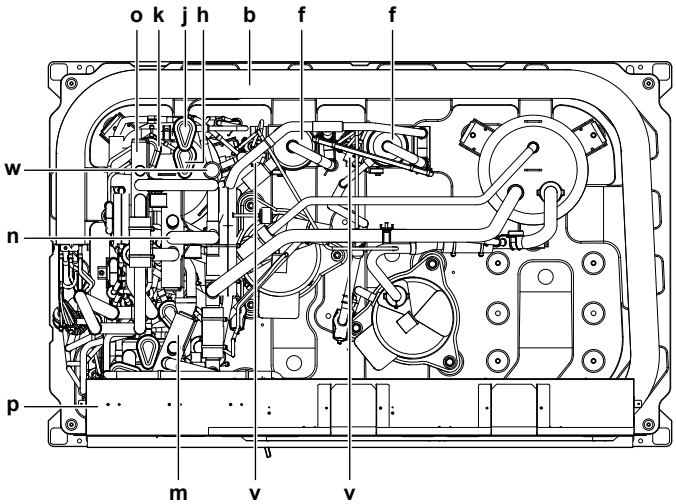

- **a** Compressor (M1C)
- **b** Heat exchanger
- **c** Propeller fan
- **d** Fan motor (M1F)
- **e** Accumulator
- **f** Oil separator
- **g** Electronic expansion valve (upper heat exchanger)
- **h** Electronic expansion valve (subcool heat exchanger)
- **i** Electronic expansion valve (lower heat exchanger)
- **j** Electronic expansion valve (receiver gas)
- **k** Electronic expansion valve (inverter cooling)
- **l** Electronic expansion valve (auto charge)
- **m** 4-way valve (high pressure/low pressure gas pipe)
- **n** 4-way valve (lower heat exchanger)
- **o** 4-way valve (upper heat exchanger)
- **p** Electrical component box
- **q** Service port
- **r** Charge port
- **s** Stop valve (gas)
- **t** Stop valve (high pressure/low pressure gas)
- **u** Stop valve (liquid)
- **v** Solenoid valve (M1C oil return)
- **w** Solenoid valve (liquid pipe)
- **x** Heat sink
- **y** Liquid receiver

12.5 Components: Electrical component box

5~12 HP

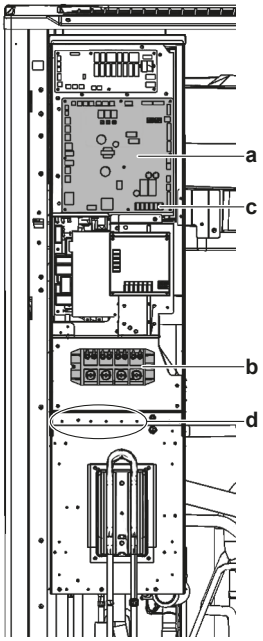

14~20 HP

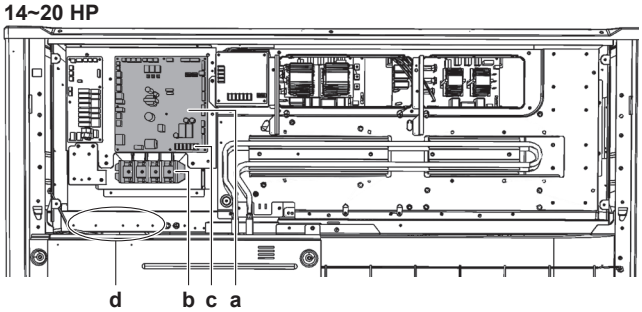

- **a** Main PCB.
- **b** Terminal block X1M: main terminal block which allows easy connection of field wiring for power supply.
- **c** Terminal X1M on main PCB: terminal block for transmission wiring.
- **d** Cable tie mountings: the cable tie mountings allow to fix the field wiring with cable ties to the electrical component box to ensure strain relief.

INFORMATION

For more details refer to the wiring diagram of the units. The wiring diagram is located on the inside of the electrical component box.

12.6 Piping diagram: Outdoor unit

Piping diagram: 5~12 HP

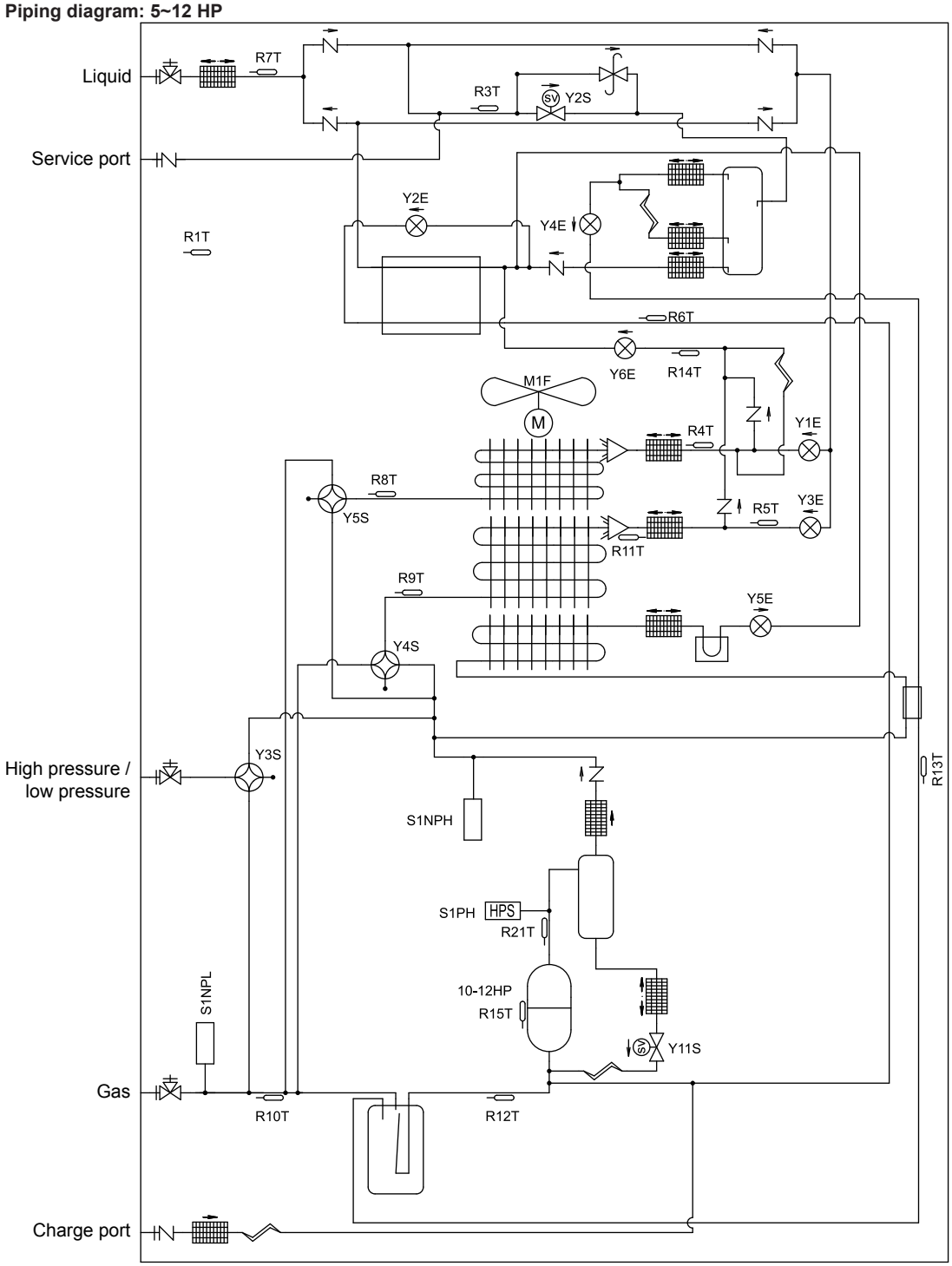

3D088100 page 1

Piping diagram: 14~20 HP

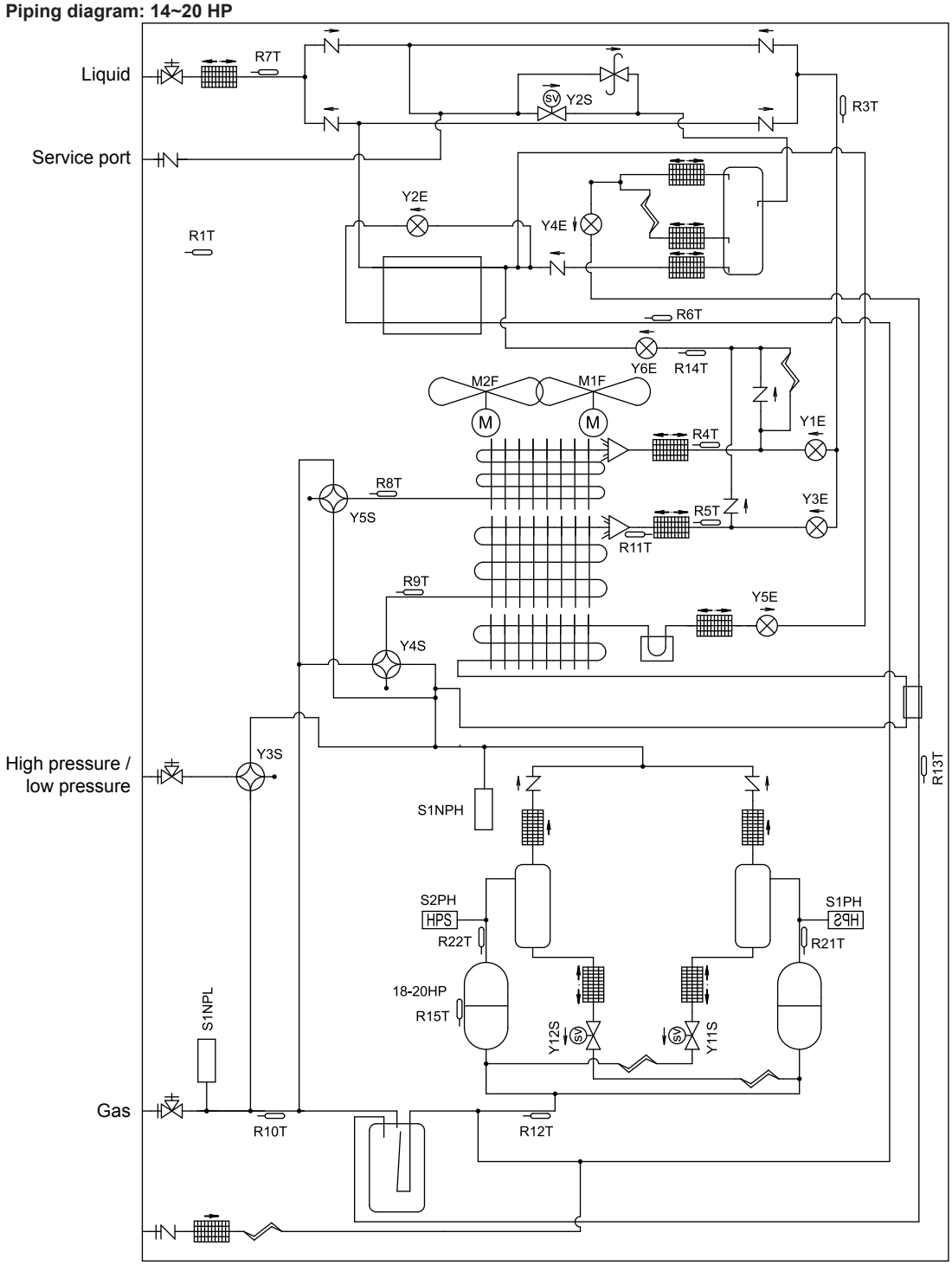

3D088099 page 1

Charge port / Service port

Stop valve

Filter

Check valve

Pressure relief valve

Thermistor

Solenoid valve

Heat sink (PCB)

Capillary tube

Expansion valve

4-way valve

Propeller fan

High pressure switch

Low pressure sensor

High pressure sensor

Oil separator

Accumulator

Heat exchanger

Compressor

Double tube heat exchanger

Distributor

Liquid receiver

12.7 Wiring diagram: Outdoor unit

Refer to the wiring diagram sticker on the unit. The abbreviations used are listed below.

INFORMATION

The wiring diagram on the outdoor unit is only for the outdoor unit. For the indoor unit or optional electrical components, refer to the wiring diagram of the indoor unit.

5+8 HP

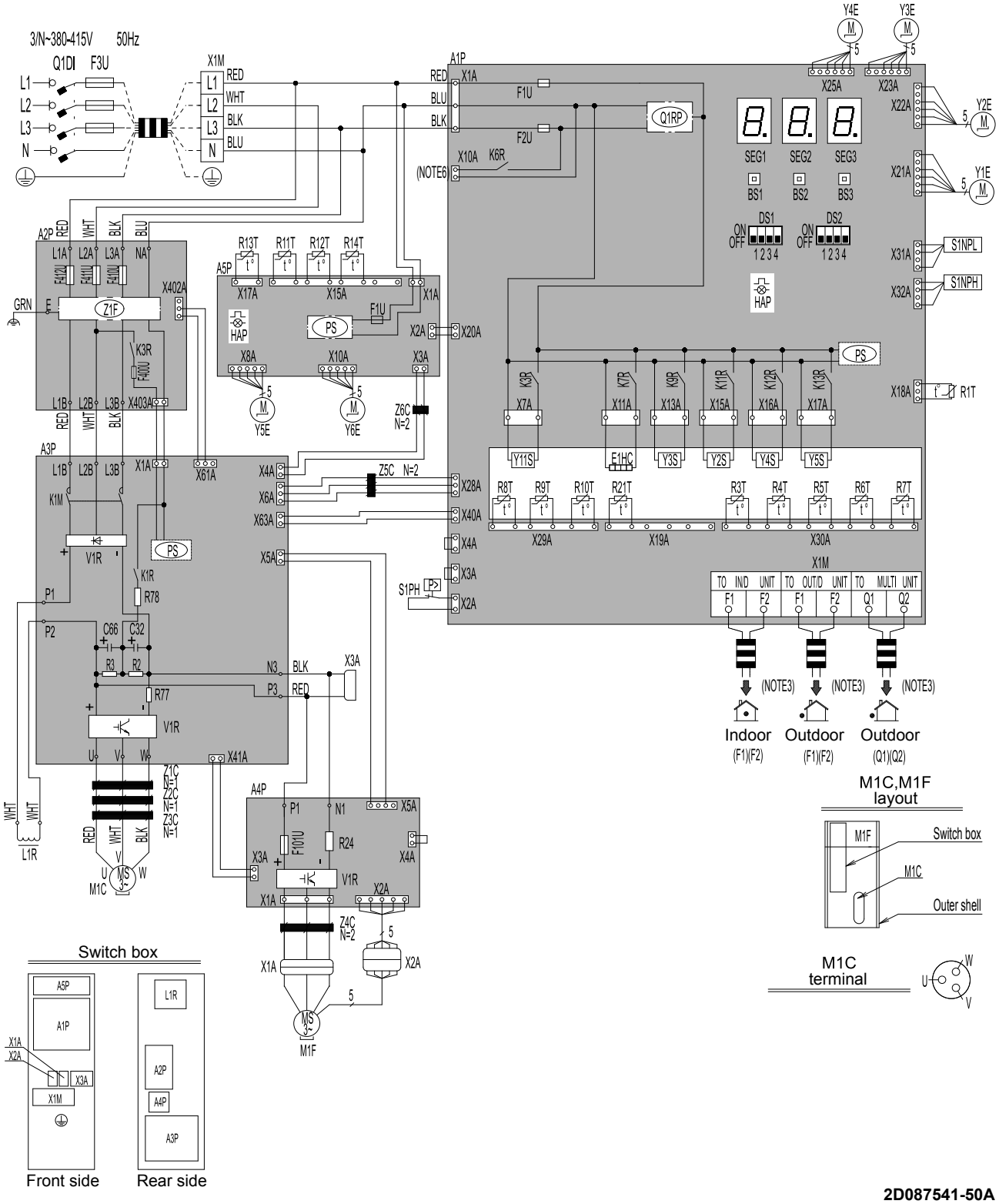

A1P	Printed circuit board (main)	F1U, F2U	Fuse (T, 3, 15 A, 250 V) (A1P)
A2P	Printed circuit board (noise filter)	F1U	Fuse (T, 3, 15 A, 250 V) (A5P)
A3P	Printed circuit board (inverter)	F101U	Fuse (A4P)
A4P	Printed circuit board (fan)	F3U	Fuse (field-supplied)
A5P	Printed circuit board (sub)	F410U~F412U	Fuse (A2P)
BS1~BS3	Push-button switch (A1P) (mode, set, return)	F400U	Fuse (A2P)
C66, C32	Capacitor (A3P)	HAP	Pilot lamp (service monitor - green) (A1P) (A5P)
DS1, DS2	DIP switch (A1P)		
E1HC	Crankcase heater	K1M	Magnetic contactor (A3P)

K1R	Magnetic relay (A3P)
K3R	Magnetic relay (A2P)
K3R	Magnetic relay (Y11S) (A1P)
K6R	Magnetic relay (optional bottom plate heater) (A1P)
K7R	Magnetic relay (E1HC) (A1P)
K9R	Magnetic relay (Y3S) (A1P)
K11R	Magnetic relay (Y2S) (A1P)
K12R	Magnetic relay (Y4S) (A1P)
K13R	Magnetic relay (Y5S) (A1P)
L1R	Reactor
M1C	Motor (compressor)
M1F	Motor (fan)
PS	Switching power supply (A1P) (A3P) (A5P)
Q1DI	Earth leakage breaker (field-supplied)
Q1RP	Phase reversal detection circuit (A1P)
R1T	Thermistor (air) (A1P)
R21T	Thermistor (M1C discharge) (A1P)
R3T	Thermistor (liquid main) (A1P)
R4T	Thermistor (upper heat exchanger – liquid) (A1P)
R5T	Thermistor (lower heat exchanger – liquid) (A1P)
R6T	Thermistor (subcool heat exchanger – gas) (A1P)
R7T	Thermistor (subcool heat exchanger – liquid) (A1P)
R8T	Thermistor (upper heat exchanger – gas) (A1P)
R9T	Thermistor (lower heat exchanger – gas) (A1P)
R10T	Thermistor (suction) (A1P)
R11T	Thermistor (heat exchanger deicer) (A5P)
R12T	Thermistor (suction compressor) (A5P)
R13T	Thermistor (receiver gas) (A5P)
R14T	Thermistor (auto charge) (A5P)
R78	Resistor (current limiting) (A3P)
R24	Resistor (current sensor) (A4P)
R77	Resistor (current sensor) (A3P)
R3, R2	Resistor (A3P)
S1NPH	Pressure sensor (high)
S1NPL	Pressure sensor (low)
S1PH	Pressure switch (high)
SEG1~SEG3	7-segment display (A1P)
V1R	Power module (A3P) (A4P)
X1A, X2A	Connector (M1F)
X3A	Connector (residual charge check)
X10A	Connector (bottom plate heater – optional accessory)
X1M	Terminal block (power supply)
X1M	Terminal block (control) (A1P)
Y1E	Electronic expansion valve (upper heat exchanger)
Y2E	Electronic expansion valve (subcool heat exchanger)
Y3E	Electronic expansion valve (lower heat exchanger)
Y4E	Electronic expansion valve (receiver gas)
Y5E	Electronic expansion valve (inverter cooling)
Y6E	Electronic expansion valve (auto charge)
Y11S	Solenoid valve (M1C oil return)
Y2S	Solenoid valve (liquid pipe)
Y3S	Solenoid valve (high pressure/low pressure gas pipe)
Y4S	Solenoid valve (lower heat exchanger)
Y5S	Solenoid valve (upper heat exchanger)
Z1C~Z6C	Noise filter (ferrite core)
Z1F	Noise filter (with surge absorber) (A2P)

Note 1	This wiring diagram only applies to the outdoor unit.
Note 2	▪ : Field wiring ▪ : Terminal block ▪ : Connector ▪ : Terminal ▪ : Protective earth (screw)
Note 3	For the connection of the wiring to outdoor-indoor transmission terminals F1/F2, outdoor-other systems transmission terminals F1/F2, and master-slave transmission terminals Q1/Q2, refer to the installation manual.
Note 4	When operating the unit, do not short-circuit protection device S1PH.
Note 5	Colours: ▪ BLK: Black ▪ RED: Red ▪ BLU: Blue ▪ WHT: White ▪ GRN: Green
Note 6	When using optional accessories, refer to their respective installation manual.

10+12 HP

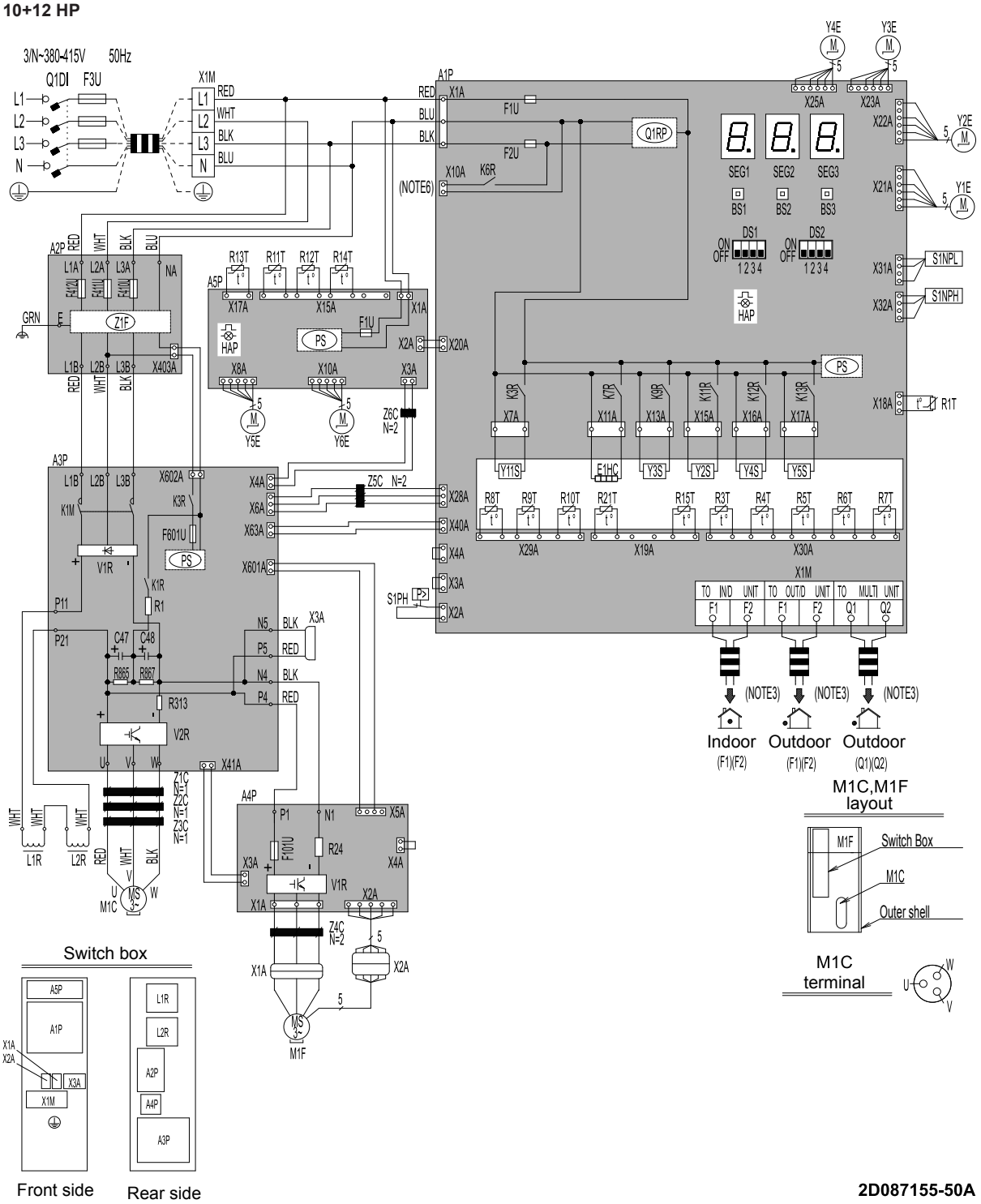

A1P	Printed circuit board (main)	F101U	Fuse (A4P)
A2P	Printed circuit board (noise filter)	F3U	Fuse (field-supplied)
A3P	Printed circuit board (inverter)	F410U~F412U	Fuse (A2P)
A4P	Printed circuit board (fan)	F601U	Fuse (A3P)
A5P	Printed circuit board (sub)	HAP	Pilot lamp (service monitor - green) (A1P) (A5P)
BS1~BS3	Push-button switch (A1P) (mode, set, return)		
C47, C48	Capacitor (A3P)	K1M	Magnetic contactor (A3P)
DS1, DS2	DIP switch (A1P)	K1R	Magnetic relay (A3P)
E1HC	Crankcase heater	K3R	Magnetic relay (A3P)
F1U, F2U	Fuse (T, 3, 15 A, 250 V) (A1P)	K3R	Magnetic relay (Y11S) (A1P)
F1U	Fuse (T, 3, 15 A, 250 V) (A5P)	K6R	Magnetic relay (optional bottom plate heater) (A1P)

K7R	Magnetic relay (E1HC) (A1P)
K9R	Magnetic relay (Y3S) (A1P)
K11R	Magnetic relay (Y2S) (A1P)
K12R	Magnetic relay (Y4S) (A1P)
K13R	Magnetic relay (Y5S) (A1P)
L1R, L2R	Reactor
M1C	Motor (compressor)
M1F	Motor (fan)
PS	Switching power supply (A1P) (A3P) (A5P)
Q1DI	Earth leakage breaker (field-supplied)
Q1RP	Phase reversal detection circuit (A1P)
R1T	Thermistor (air) (A1P)
R21T	Thermistor (M1C discharge) (A1P)
R3T	Thermistor (liquid main) (A1P)
R4T	Thermistor (upper heat exchanger – liquid) (A1P)
R5T	Thermistor (lower heat exchanger – liquid) (A1P)
R6T	Thermistor (subcool heat exchanger – gas) (A1P)
R7T	Thermistor (subcool heat exchanger – liquid) (A1P)
R8T	Thermistor (upper heat exchanger – gas) (A1P)
R9T	Thermistor (lower heat exchanger – gas) (A1P)
R10T	Thermistor (suction) (A1P)
R11T	Thermistor (heat exchanger deicer) (A5P)
R12T	Thermistor (suction compressor) (A5P)
R13T	Thermistor (receiver gas) (A5P)
R14T	Thermistor (auto charge) (A5P)
R15T	Thermistor (compressor body) (A1P)
R1	Resistor (current limiting) (A3P)
R24	Resistor (current sensor) (A4P)
R313	Resistor (current sensor) (A3P)
R865, R867	Resistor (A3P)
S1NPH	Pressure sensor (high)
S1NPL	Pressure sensor (low)
S1PH	Pressure switch (high)
SEG1~SEG3	7-segment display (A1P)
V1R	Power module (A3P) (A4P)
V2R	Power module (A3P)
X1A, X2A	Connector (M1F)
X3A	Connector (residual charge check)
X10A	Connector (bottom plate heater – optional accessory)
X1M	Terminal block (power supply)
X1M	Terminal block (control) (A1P)
Y1E	Electronic expansion valve (upper heat exchanger)
Y2E	Electronic expansion valve (subcool heat exchanger)
Y3E	Electronic expansion valve (lower heat exchanger)
Y4E	Electronic expansion valve (receiver gas)
Y5E	Electronic expansion valve (inverter cooling)
Y6E	Electronic expansion valve (auto charge)
Y11S	Solenoid valve (M1C oil return)
Y2S	Solenoid valve (liquid pipe)
Y3S	Solenoid valve (high pressure/low pressure gas pipe)
Y4S	Solenoid valve (lower heat exchanger)
Y5S	Solenoid valve (upper heat exchanger)
Z1C~Z6C	Noise filter (ferrite core)
Z1F	Noise filter (with surge absorber) (A2P)
Note 1	This wiring diagram only applies to the outdoor unit.
Note 2	▪ : Field wiring ▪ : Terminal block ▪ : Connector ▪ : Terminal ▪ : Protective earth (screw)
Note 3	For the connection of the wiring to outdoor-indoor transmission terminals F1/F2, outdoor-other systems transmission terminals F1/F2, and master-slave transmission terminals Q1/Q2, refer to the installation manual.
Note 4	When operating the unit, do not short-circuit protection device S1PH.
Note 5	Colours: ▪ BLK: Black ▪ RED: Red ▪ BLU: Blue ▪ WHT: White ▪ GRN: Green
Note 6	When using optional accessories, refer to their respective installation manual.

14+16 HP

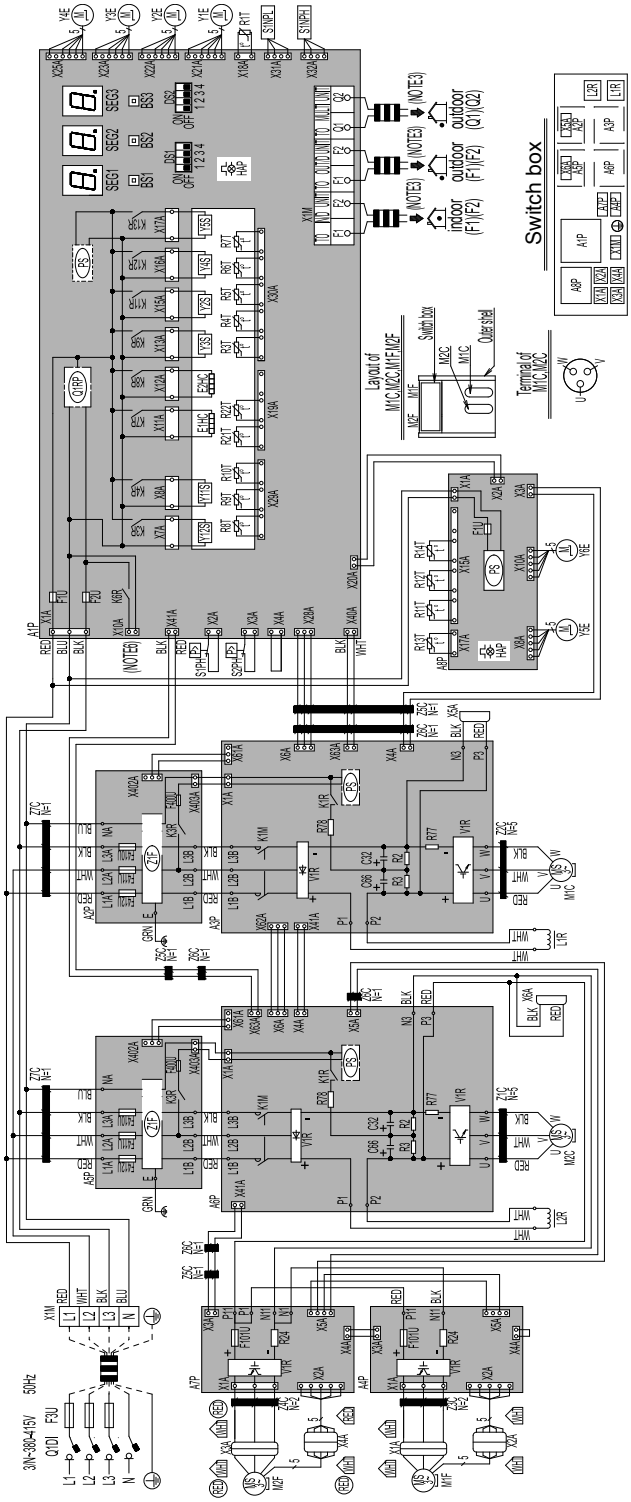

2D087542-50A

A1P	Printed circuit board (main)	F1U, F2U	Fuse (T, 3, 15 A, 250 V) (A1P)
A2P, A5P	Printed circuit board (noise filter)	F1U	Fuse (T, 3, 15 A, 250 V) (A8P)
A3P, A6P	Printed circuit board (inverter)	F3U	Fuse (field-supplied)
A4P, A7P	Printed circuit board (fan)	F101U	Fuse (A4P) (A7P)
A8P	Printed circuit board (sub)	F400U	Fuse (A2P) (A5P)
BS1~BS3	Push-button switch (A1P) (mode, set, return)	F410U~F412U	Fuse (A2P) (A5P)
C32, C66	Capacitor (A3P) (A6P)	HAP	Pilot lamp (service monitor - green) (A1P) (A8P)
DS1, DS2	DIP switch (A1P)	K1M	Magnetic contactor (A3P) (A6P)
E1HC, E2HC	Crankcase heater	K1R	Magnetic relay (A3P) (A6P)

K3R	Magnetic relay (A2P) (A5P)
K3R	Magnetic relay (Y11S) (A1P)
K4R	Magnetic relay (Y12S) (A1P)
K6R	Magnetic relay (optional bottom plate heater) (A1P)
K7R	Magnetic relay (E1HC) (A1P)
K8R	Magnetic relay (E2HC) (A1P)
K9R	Magnetic relay (Y3S) (A1P)
K11R	Magnetic relay (Y2S) (A1P)
K12R	Magnetic relay (Y4S) (A1P)
K13R	Magnetic relay (Y5S) (A1P)
L1R, L2R	Reactor
M1C, M2C	Motor (compressor)
M1F, M2F	Motor (fan)
PS	Switching power supply (A1P) (A3P) (A6P) (A8P)
Q1DI	Earth leakage breaker (field-supplied)
Q1RP	Phase reversal detection circuit (A1P)
R2, R3	Resistor (A3P) (A6P)
R24	Resistor (current sensor) (A4P) (A7P)
R77	Resistor (current sensor) (A3P) (A6P)
R78	Resistor (current limiting) (A3P) (A6P)
R1T	Thermistor (air) (A1P)
R21T, R22T	Thermistor (M1C, M2C discharge) (A1P)
R3T	Thermistor (liquid main) (A1P)
R4T	Thermistor (upper heat exchanger – liquid) (A1P)
R5T	Thermistor (lower heat exchanger – liquid) (A1P)
R6T	Thermistor (subcool heat exchanger – gas) (A1P)
R7T	Thermistor (subcool heat exchanger – liquid) (A1P)
R8T	Thermistor (upper heat exchanger – gas) (A1P)
R9T	Thermistor (lower heat exchanger – gas) (A1P)
R10T	Thermistor (suction) (A1P)
R11T	Thermistor (heat exchanger deicer) (A8P)
R12T	Thermistor (suction compressor) (A8P)
R13T	Thermistor (receiver gas) (A8P)
R14T	Thermistor (auto charge) (A8P)
S1NPH	Pressure sensor (high)
S1NPL	Pressure sensor (low)
S1PH, S2PH	Pressure switch (high)
SEG1~SEG3	7-segment display (A1P)
V1R	Power module (A3P) (A6P)
V1R	Power module (A4P) (A7P)
X1A~X4A	Connector (M1F, M2F)
X5A, X6A	Connector (residual charge check)
X10A	Connector (bottom plate heater – optional accessory)
X1M	Terminal block (power supply)
X1M	Terminal block (control) (A1P)
Y1E	Electronic expansion valve (upper heat exchanger)
Y2E	Electronic expansion valve (subcool heat exchanger)
Y3E	Electronic expansion valve (lower heat exchanger)
Y4E	Electronic expansion valve (receiver gas)
Y5E	Electronic expansion valve (inverter cooling)
Y6E	Electronic expansion valve (auto charge)
Y11S	Solenoid valve (M1C oil return)
Y12S	Solenoid valve (M2C oil return)
Y2S	Solenoid valve (liquid pipe)
Y3S	Solenoid valve (high pressure/low pressure gas pipe)
Y4S	Solenoid valve (lower heat exchanger)
Y5S	Solenoid valve (upper heat exchanger)
Z1C~Z7C	Noise filter (ferrite core)
Z1F	Noise filter (with surge absorber) (A2P) (A5P)
	Connector colour
	Wire colour
Note 1	This wiring diagram only applies to the outdoor unit.
Note 2	▪ : Field wiring ▪ : Terminal block ▪ : Connector ▪ : Terminal ▪ : Protective earth (screw)
Note 3	For the connection of the wiring to outdoor-indoor transmission terminals F1/F2, outdoor-other systems transmission terminals F1/F2, and master-slave transmission terminals Q1/Q2, refer to the installation manual.
Note 4	When operating the unit, do not short-circuit protection devices S1PH and S2PH.
Note 5	Colours: ▪ BLK: Black ▪ RED: Red ▪ BLU: Blue ▪ WHT: White ▪ GRN: Green
Note 6	When using optional accessories, refer to their respective installation manual.

18+20 HP

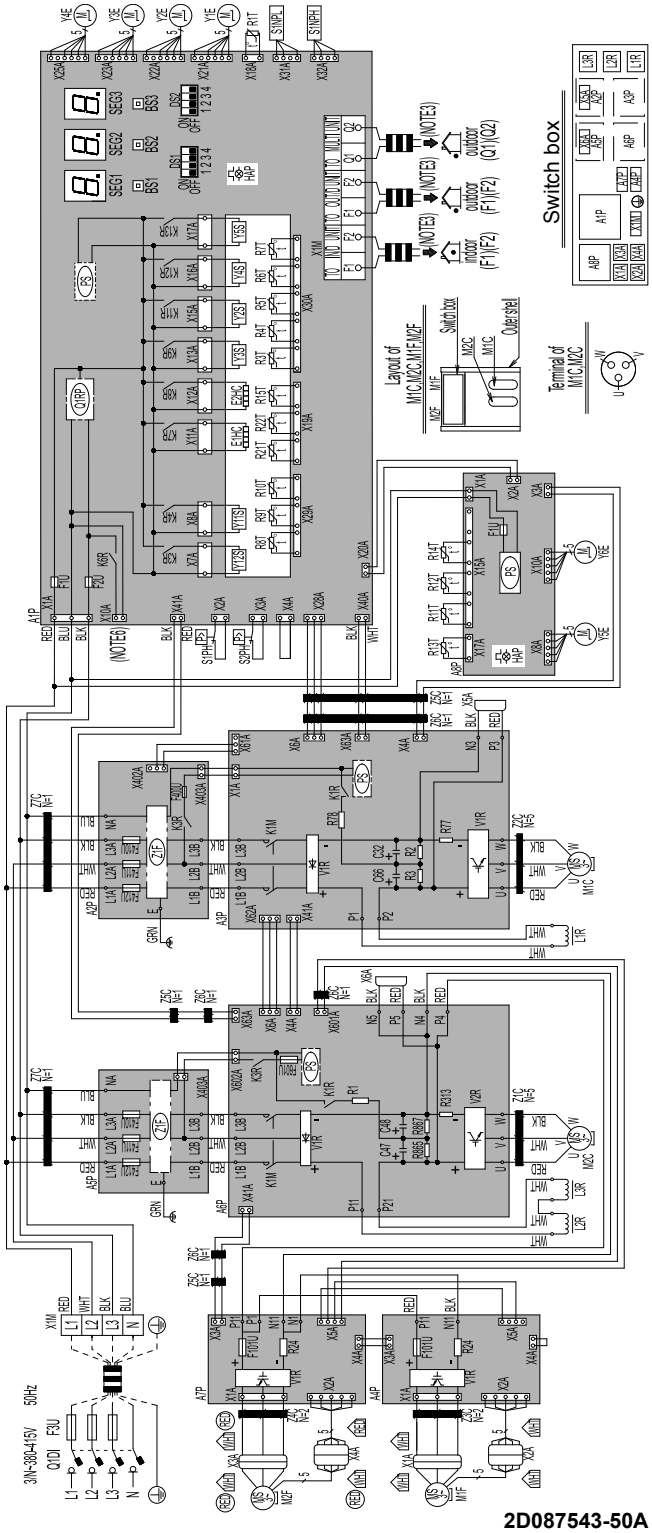

2D087543-50A

A1P	Printed circuit board (main)	E1HC, E2HC	Crankcase heater
A2P, A5P	Printed circuit board (noise filter)	F1U, F2U	Fuse (T, 3, 15 A, 250 V) (A1P) (A8P)
A3P, A6P	Printed circuit board (inverter)	F3U	Fuse (field-supplied)
A4P, A7P	Printed circuit board (fan)	F101U	Fuse (A4P) (A7P)
A8P	Printed circuit board (sub)	F400U	Fuse (A2P)
BS1~BS3	Push-button switch (A1P) (mode, set, return)	F410U~F412U	Fuse (A2P) (A5P)
C32, C66	Capacitor (A3P)	F601U	Fuse (A6P)
C47, C48	Capacitor (A6P)	HAP	Pilot lamp (service monitor - green) (A1P) (A8P)
DS1, DS2	DIP switch (A1P)	K1M	Magnetic contactor (A3P) (A6P)

K1R	Magnetic relay (A3P) (A6P)
K3R	Magnetic relay (A2P) (A6P)
K3R	Magnetic relay (Y11S) (A1P)
K4R	Magnetic relay (Y12S) (A1P)
K6R	Magnetic relay (optional bottom plate heater) (A1P)
K7R	Magnetic relay (E1HC) (A1P)
K8R	Magnetic relay (E2HC) (A1P)
K9R	Magnetic relay (Y3S) (A1P)
K11R	Magnetic relay (Y2S) (A1P)
K12R	Magnetic relay (Y4S) (A1P)
K13R	Magnetic relay (Y5S) (A1P)
L1R~L3R	Reactor
M1C, M2C	Motor (compressor)
M1F, M2F	Motor (fan)
PS	Switching power supply (A1P) (A3P) (A6P) (A8P)
Q1DI	Earth leakage breaker (field-supplied)
Q1RP	Phase reversal detection circuit (A1P)
R1	Resistor (current limiting) (A6P)
R2, R3	Resistor (A3P)
R24	Resistor (current sensor) (A4P) (A7P)
R77	Resistor (current sensor) (A3P)
R78	Resistor (current limiting) (A3P)
R313	Resistor (current sensor) (A6P)
R865, R867	Resistor (A6P)
R1T	Thermistor (air) (A1P)
R21T, R22T	Thermistor (M1C, M2C discharge) (A1P)
R3T	Thermistor (liquid main) (A1P)
R4T	Thermistor (upper heat exchanger – liquid) (A1P)
R5T	Thermistor (lower heat exchanger – liquid) (A1P)
R6T	Thermistor (subcool heat exchanger – gas) (A1P)
R7T	Thermistor (subcool heat exchanger – liquid) (A1P)
R8T	Thermistor (upper heat exchanger – gas) (A1P)
R9T	Thermistor (lower heat exchanger – gas) (A1P)
R10T	Thermistor (suction) (A1P)
R11T	Thermistor (heat exchanger deicer) (A8P)
R12T	Thermistor (suction compressor) (A8P)
R13T	Thermistor (receiver gas) (A8P)
R14T	Thermistor (auto charge) (A8P)
R15T	Thermistor (compressor body) (A1P)
S1NPH	Pressure sensor (high)
S1NPL	Pressure sensor (low)
S1PH, S2PH	Pressure switch (high)
SEG1~SEG3	7-segment display (A1P)
V1R	Power module (A3P) (A6P)
V1R	Power module (A4P) (A7P)
V2R	Power module (A6P)
X1A~X4A	Connector (M1F, M2F)
X5A, X6A	Connector (residual charge check)
X10A	Connector (bottom plate heater – optional accessory)
X1M	Terminal block (power supply)
X1M	Terminal block (control) (A1P)
Y1E	Electronic expansion valve (upper heat exchanger)
Y2E	Electronic expansion valve (subcool heat exchanger)
Y3E	Electronic expansion valve (lower heat exchanger)
Y4E	Electronic expansion valve (receiver gas)
Y5E	Electronic expansion valve (inverter cooling)
Y6E	Electronic expansion valve (auto charge)
Y11S	Solenoid valve (M1C oil return)
Y12S	Solenoid valve (M2C oil return)
Y2S	Solenoid valve (liquid pipe)
Y3S	Solenoid valve (high pressure/low pressure gas pipe)
Y4S	Solenoid valve (lower heat exchanger)
Y5S	Solenoid valve (upper heat exchanger)
Z1C~Z7C	Noise filter (ferrite core)
Z1F	Noise filter (with surge absorber) (A2P) (A5P)
⌂	Connector colour
⊛	Wire colour
Note 1	This wiring diagram only applies to the outdoor unit.
Note 2	▪ : Field wiring ▪ : Terminal block ▪ : Connector ▪ : Terminal ▪ : Protective earth (screw)
Note 3	For the connection of the wiring to outdoor-indoor transmission terminals F1/F2, outdoor-other systems transmission terminals F1/F2, and master-slave transmission terminals Q1/Q2, refer to the installation manual.
Note 4	When operating the unit, do not short-circuit protection devices S1PH and S2PH.
Note 5	Colours: ▪ BLK: Black ▪ RED: Red ▪ BLU: Blue ▪ WHT: White ▪ GRN: Green
Note 6	When using optional accessories, refer to their respective installation manual.

12.8 Technical specifications: Outdoor unit

INFORMATION

For technical and electrical details of multi unit combinations, see technical engineering data.

Technical specifications

Specification	5 HP	8 HP	10 HP	12 HP	14 HP	16 HP	18 HP	20 HP
Casing material	Painted galvanised steel							
Dimensions h×w×d	1685×930×765 mm				1685×1240×765 mm			
Weight								
Operation range								
▪ Cooling (min./max.)	–5/43°C							
▪ Heating (min./max.)	–20/21°C							
Cooling[a]								
▪ Capacity	14.0 kW	22.4 kW	28.0 kW	33.5 kW	40.0 kW	45.0 kW	50.4 kW	56.0 kW
▪ EER	4.42	4.22	3.92	3.63	3.74	3.52	3.32	3.01
Heating[b]								
▪ Capacity	16.0 kW	25.0 kW	31.5 kW	37.5 kW	45.0 kW	50.0 kW	56.5 kW	63.0 kW
▪ COP	4.92	4.54	4.27	3.98	3.98	3.88	3.95	3.60
PED								
▪ Category	2							
▪ Most critical part	Liquid receiver							
▪ PS×V	564 bar×l				672 bar×l		824 bar×l	
Maximum number of indoor units connected[c]	64							
Heat exchanger								
▪ Type	cross fin							
▪ Treatment	anti corrosion							
Fan								
▪ Type	propeller							
▪ Quantity	1				2			
▪ Air flow rate[d]	162 m^3/min		175 m^3/min	185 m^3/min	223 m^3/min	260 m^3/min	251 m^3/min	261 m^3/min
▪ Motor	1				2			
▪ Model	brushless DC							
▪ Output/pcs	750 W							
Compressor								
▪ Quantity	1				2			
▪ Model	inverter							
▪ Type	hermetically sealed scroll compressor							
▪ Crankcase heater	33 W							
Sound level (nominal)[e]								
▪ Sound power[f]	77 dBA	78 dBA	79 dBA	81 dBA		86 dBA		88 dBA
▪ Sound pressure[g]	56 dBA	58 dBA		61 dBA		64 dBA	65 dBA	66 dBA
Refrigerant								
▪ Type	R410A							
▪ Charge	9.7 kg		9.8 kg	9.9 kg	11.8 kg			
Refrigerant oil	Synthetic (ether) oil							
Safety devices	▪ High pressure switch ▪ Fan driver overload protector ▪ Inverter overload protector ▪ PCB fuse							

(a) Nominal cooling capacities are based on indoor temperature 27°C DB and 19°C WB, outdoor temperature 35°C DB, equivalent refrigerant piping: 5 m, level difference: 0 m.

(b) Nominal heating capacities are based on indoor temperature 20°C DB, outdoor temperature 7°C DB and 6°C WB, equivalent refrigerant piping: 5 m, level difference: 0 m.

(c) Actual number of units depends on the indoor unit type (VRV DX, Hydrobox, ...) and the connection ratio restriction for the system (50%≤CR≤130%).
(d) Nominal at 230 V.
(e) Sound values are measured in a semi-anechoic room.
(f) Sound power level is an absolute value that a sound generates.
(g) Sound pressure level is a relative value depending on the distance and acoustic environment. For more details, refer to sound level drawings in the technical data book.

Electrical specifications

Specification	5 HP	8 HP	10 HP	12 HP	14 HP	16 HP	18 HP	20 HP
Power supply								
▪ Name	Y1							
▪ Phase	3N~							
▪ Frequency	50 Hz							
▪ Voltage	380-415 V							
Current								
▪ Nominal running current (RLA)[(a)]	4.1 A	7.7 A	10.5 A	13.8 A	15.6 A	18.5 A	22 A	28.5 A
▪ Starting current (MSC)[(b)]	≤MCA							
▪ Minimum circuit amps (MCA)[(c)]	15 A		21.0 A	21.0 A	28.0 A	32.0 A	36.0 A	40.0 A
▪ Maximum fuse amps (MFA)[(d)]	20 A		25 A		32 A	40 A		50 A
▪ Total overcurrent amps (TOCA)[(e)]	17.3 A		21.1 A		35.4 A		42.7 A	
▪ Full load amps (FLA)[(f)]	1.2 A		1.3 A	1.5 A	1.8 A	2.6 A		
Voltage range	380-415 ±10% V							
Wiring connections								
▪ For power supply	5G							
▪ For connection to indoor unit	2 (F1/F2)							
Power supply intake	both indoor and outdoor unit							

(a) RLA is based on indoor unit temperature 27°C DB and 19°C WB, outdoor temperature 35°C DB.
(b) MSC=the maximum current during startup of the compressor. VRV IV uses only inverter compressors. MCA must be used to select the correct field wiring size. The MCA can be regarded as the maximum running current.
(c) MCA must be used to select the correct field wiring size. The MCA can be regarded as the maximum running current.
(d) MFA is used to select the circuit breaker and the ground fault circuit interrupter (earth leakage circuit breaker).
(e) TOCA means the total value of each OC set.
(f) FLA=nominal running current fan. Voltage range: units are suitable for use on electrical systems where voltage supplied to unit terminal is not below or above listed range limits. Maximum allowable voltage range variation between phases is 2%.

12.9 Capacity table: Indoor unit

Total capacity of indoor units needs to be within the specified range.
The connection ratio (CR): 50%≤CR≤130%.

HP class of outdoor unit	50% minimum CR	100% nominal CR	130% maximum CR
5	62.5	125	162.5
8	100	200	260
10	125	250	325
12	150	300	390
13	162.5	325	422.5
14	175	350	455
16	200	400	520
18	225	450	585
20	250	500	650
22	275	550	715
24	300	600	780
26	325	650	845
28	350	700	910
30	375	750	975
32	400	800	1040
34	425	850	1105
36	450	900	1170
38	475	950	1235
40	500	1000	1300
42	525	1050	1365
44	550	1100	1430
46	575	1150	1495
48	600	1200	1560
50	625	1250	1625
52	650	1300	1690
54	675	1350	1755

NOTICE

When selecting the total capacity higher than mentioned in above table, cooling and heating capacity will drop. For additional information see technical engineering data.

For the user

13 About the system

The indoor unit part of VRV IV heat recovery system can be used for heating/cooling applications. The type of indoor unit which can be used depends on the outdoor units series.

NOTICE

Do NOT use the system for other purposes. In order to avoid any quality deterioration, do NOT use the unit for cooling precision instruments, food, plants, animals, or works of art.

NOTICE

For future modifications or expansions of your system:

A full overview of allowable combinations (for future system extensions) is available in technical engineering data and should be consulted. Contact your installer to receive more information and professional advice.

In general following type of indoor units can be connected to a VRV IV heat recovery system (not exhaustive list, depending on outdoor unit model and indoor unit model combinations):

- VRV direct expansion (DX) indoor units (air-to-air applications).
- HT (high temperature) Hydrobox (air-to-water applications): HXHD series (heating only).
- LT (low temperature) Hydrobox (air-to-water applications): HXY080/125 series.
- AHU (air-to-air applications): EKEXV-kit+EKEQM-box required, depending on the application.
- Comfort air curtain (air-to-air applications): CYVS (Biddle) series.

13.1 System layout

Your VRV IV heat recovery series outdoor unit can be one of following models:

Model	Description
REYQ8~20	Heat recovery model for single or multi-use
REMQ5	Heat recovery model for multi-use only

Depending on the type of outdoor unit which is chosen, some functionality will or will not exist. It will be indicated throughout this operation manual when certain features have exclusive model rights or not.

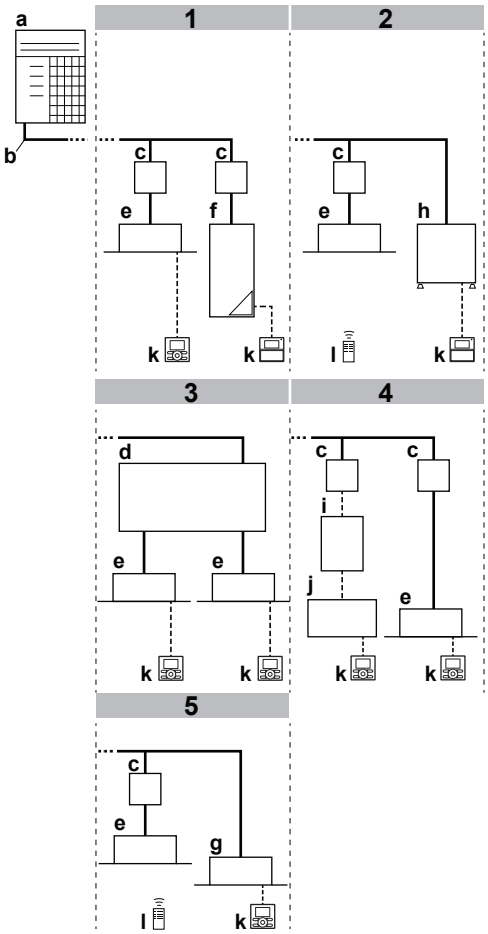

- **a** Outdoor unit
- **b** Refrigerant piping
- **c** BS unit
- **d** Multi BS unit
- **e** VRV DX indoor unit
- **f** LT Hydrobox unit
- **g** Cooling only VRV indoor unit
- **h** HT Hydrobox unit
- **i** EKEXV kit
- **j** AHU
- **k** User interface
- **l** Wireless user interface

The complete system can be divided into several sub-systems. These sub-systems have 100% independence regarding the selection of cooling and heating operation, and each consists of one single BS unit or one individual branch set of a multi BS unit, and all indoor units connected downstream. When using a cool/heat selector, connect this to the BS unit.

14 User interface

CAUTION

- NEVER touch the internal parts of the controller.
- Do NOT remove the front panel. Some parts inside are dangerous to touch and appliance problems may happen. For checking and adjusting the internal parts, contact your dealer.

This operation manual will give a non-exhaustive overview of the main functions of the system.

Detailed information on required actions to achieve certain functions can be found in the dedicated installation and operation manual of the indoor unit.

Refer to the operation manual of the installed user interface.

15 Before operation

WARNING

This unit contains electrical and hot parts.

WARNING

Before operating the unit, be sure the installation has been carried out correctly by an installer.

NOTICE

Never inspect or service the unit by yourself. Ask a qualified service person to perform this work.

CAUTION

It is not good for your health to expose your body to the air flow for a long time.

CAUTION

To avoid oxygen deficiency, ventilate the room sufficiently if equipment with burner is used together with the system.

CAUTION

Do NOT operate the system when using a room fumigation-type insecticide. Chemicals could collect in the unit, and endanger the health of people who are hypersensitive to chemicals.

NOTICE

Be sure to turn on the power 6 hours before operation in order to have power running to the crankcase heater and to protect the compressor.

This operation manual is for the following systems with standard control. Before initiating operation, contact your dealer for the operation that corresponds to your system type and mark. If your installation has a customised control system, ask your dealer for the operation that corresponds to your system.

Operation modes (depending on indoor unit type):

- Heating and cooling (air to air).
- Fan only operation (air to air).
- Heating and cooling (air to water).
- Domestic hot water operation

Dedicated functions exist depending on the type of indoor unit, refer to dedicated installation/operation manual for more information.

16 Operation

16.1 Operation range

Use the system in the following temperature and humidity ranges for safe and effective operation.

	Cooling	Heating
Outdoor temperature	–5~43°C DB	–20~20°C DB –20~15.5°C WB
Indoor temperature	21~32°C DB 14~25°C WB	15~27°C DB
Indoor humidity	≤80%[(a)]	

(a) To avoid condensation and water dripping out of the unit. If the temperature or the humidity is beyond these conditions, safety devices may be put in action and the air conditioner may not operate.

Above operation range is only valid in case direct expansion indoor units are connected to the VRV IV system.

Special operation ranges are valid in case of using Hydrobox units or AHU. They can be found in the installation/operation manual of the dedicated unit. Latest information can be found in the technical engineering data.

16.2 Operating the system

16.2.1 About operating the system

- Operation procedure varies according to the combination of outdoor unit and user interface.
- To protect the unit, turn on the main power switch 6 hours before operation.
- If the main power supply is turned off during operation, operation will restart automatically after the power turns back on again.

16.2.2 About cooling, heating, fan only, and automatic operation

- Changeover cannot be made with a user interface whose display shows "change-over under centralised control" (refer to installation and operation manual of the user interface).
- When the display "change-over under centralised control" flashes, refer to "16.5.1 About setting the master user interface" on page 76.
- The fan may keep on running for about 1 minute after the heating operation stops.
- The air flow rate may adjust itself depending on the room temperature or the fan may stop immediately. This is not a malfunction.

16.2.3 About the heating operation

It may take longer to reach the set temperature for general heating operation than for cooling operation.

The following operation is performed in order to prevent the heating capacity from dropping or cold air from blowing.

Defrost operation

In heating operation, freezing of the outdoor unit's air cooled coil increases over time, restricting the energy transfer to the outdoor unit's coil. Heating capability decreases and the system needs to go into defrost operation to be able to remove frost from the outdoor unit’s coil. During defrost operation the heating capacity on the indoor unit side will temporarily drop until defrosting is completed. After defrosting, the unit will regain its full heating capacity.

In case of	Then
REYQ10~54 multi-models	The indoor unit will continue heating operation at a reduced level during defrost operation. It will guarantee a decent comfort level indoor.
REYQ8~20 single models	The indoor unit will stop fan operation, the refrigerant cycle will reverse and energy from inside the building will be used to defrost the outdoor unit coil.

The indoor unit will indicate defrost operation on the display .

Hot start

In order to prevent cold air from blowing out of an indoor unit at the start of heating operation, the indoor fan is automatically stopped. The display of the user interface shows . It may take some time before the fan starts. This is not a malfunction.

INFORMATION

- The heating capacity drops when the outside temperature falls. If this happens, use another heating device together with the unit. (When using together with appliances that produce open fire, ventilate the room constantly). Do not place appliances that produce open fire in places exposed to the air flow from the unit or under the unit.
- It takes some time to heat up the room from the time the unit is started since the unit uses a hot-air circulating system to heat the entire room.
- If the hot air rises to the ceiling, leaving the area above the floor cold, we recommend that you use the circulator (the indoor fan for circulating air). Contact your dealer for details.

16.2.4 To operate the system (WITHOUT cool/heat changeover remote control switch)

1 Press the operation mode selector button on the user interface several times and select the operation mode of your choice.

Cooling operation

Heating operation

Fan only operation

2 Press the ON/OFF button on the user interface.

Result: The operation lamp lights up and the system starts operating.

16.2.5 To operate the system (WITH cool/heat changeover remote control switch)

Overview of the changeover remote control switch

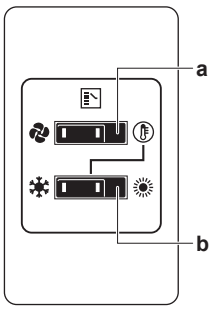

a FAN ONLY/AIR CONDITIONING SELECTOR SWITCH

Set the switch to for fan only operation or to for heating or cooling operation.

b COOL/HEAT CHANGEOVER SWITCH

Set the switch to for cooling or to for heating

To start

1 Select operation mode with the cool/heat changeover switch as follows:

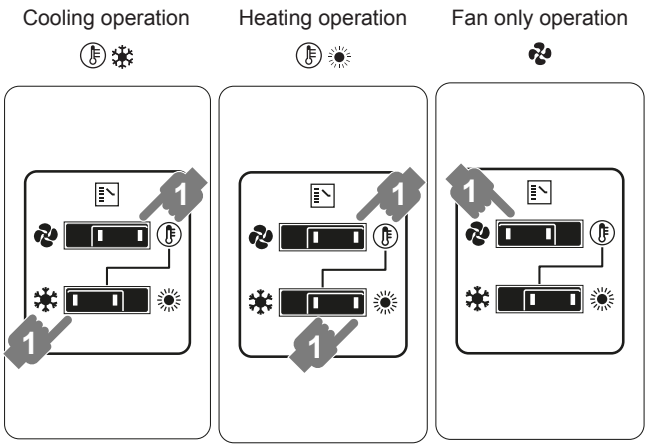

2 Press the ON/OFF button on the user interface.

Result: The operation lamp lights up and the system starts operating.

To stop

3 Press the ON/OFF button on the user interface once again.

Result: The operation lamp goes out and the system stops operating.

NOTICE

Do not turn off power immediately after the unit stops, but wait for at least 5 minutes.

To adjust

For programming temperature, fan speed and air flow direction refer to the operation manual of the user interface.

16.3 Using the dry program

16.3.1 About the dry program

- The function of this program is to decrease the humidity in your room with minimal temperature decrease (minimal room cooling).
- The micro computer automatically determines temperature and fan speed (cannot be set by the user interface).
- The system does not go into operation if the room temperature is low (<20°C).

16.3.2 To use the dry program (WITHOUT cool/heat changeover remote control switch)

To start

1 Press the operation mode selector button on the user interface several times and select (program dry operation).

2 Press the ON/OFF button of the user interface.

Result: The operation lamp lights up and the system starts operating.

3 Press the air flow direction adjust button (only for double-flow, multi-flow, corner, ceiling-suspended and wall-mounted). Refer to "16.4 Adjusting the air flow direction" on page 76 for details.

To stop

4 Press the ON/OFF button on the user interface once again.

Result: The operation lamp goes out and the system stops operating.

NOTICE

Do not turn off power immediately after the unit stops, but wait for at least 5 minutes.

16.3.3 To use the dry program (WITH cool/heat changeover remote control switch)

To start

1 Select cooling operation mode with the cool/heat changeover remote control switch.

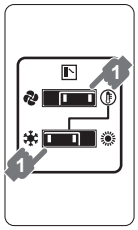

2 Press the operation mode selector button on the user interface several times and select (program dry operation).

3 Press the ON/OFF button of the user interface.

Result: The operation lamp lights up and the system starts operating.

4 Press the air flow direction adjust button (only for double-flow, multi-flow, corner, ceiling-suspended and wall-mounted). Refer to "16.4 Adjusting the air flow direction" on page 76 for details.

To stop

5 Press the ON/OFF button on the user interface once again.

Result: The operation lamp goes out and the system stops operating.

NOTICE

Do not turn off power immediately after the unit stops, but wait for at least 5 minutes.

16.4 Adjusting the air flow direction

Refer to the operation manual of the user interface.

16.4.1 About the air flow flap

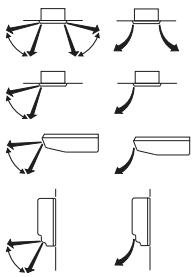

Double flow+multi-flow units

Corner units

Ceiling suspended units

Wall-mounted units

For the following conditions, a micro computer controls the air flow direction which may be different from the display.

Cooling	Heating
▪ When the room temperature is lower than the set temperature.	▪ When starting operation. ▪ When the room temperature is higher than the set temperature. ▪ At defrost operation.
▪ When operating continuously at horizontal air flow direction. ▪ When continuous operation with downward air flow is performed at the time of cooling with a ceiling-suspended or a wall-mounted unit, the micro computer may control the flow direction, and then the user interface indication will also change.	

The air flow direction can be adjusted in one of the following ways:

- The air flow flap itself adjusts its position.
- The air flow direction can be fixed by the user.
- Automatic and desired position .

WARNING

Never touch the air outlet or the horizontal blades while the swing flap is in operation. Fingers may become caught or the unit may break down.

NOTICE

- The movable limit of the flap is changeable. Contact your dealer for details. (only for double-flow, multi-flow, corner, ceiling-suspended and wall-mounted).
- Avoid operating in the horizontal direction . It may cause dew or dust to settle on the ceiling or flap.

16.5 Setting the master user interface

16.5.1 About setting the master user interface

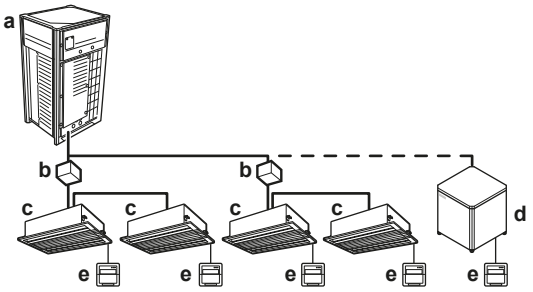

a Outdoor unit
b BS unit
c VRV DX indoor unit
d HT Hydrobox unit
e User interface

When the system is installed as shown in the figure above, it is necessary to – for each subsystem – designate one of the user interfaces as the master user interface.

The displays of slave user interfaces show (change-over under centralised control) and slave user interfaces automatically follow the operation mode directed by the master user interface.

Only the master user interface can select heating or cooling mode.

16.5.2 To designate the master user interface (VRV DX and Hydrobox)

1 Press the operation mode selector button of the current master user interface for 4 seconds. In case this procedure was not yet performed, the procedure can be executed on the first user interface operated.

Result: The display showing (change-over under centralised control) of all slave user interfaces connected to the same outdoor unit flashes.

2 Press the operation mode selector button of the controller that you wish to designate as the master user interface.

Result: Designation is completed. This user interface is designated as the master user interface and the display showing (change-over under centralised control) vanishes. The displays of other user interfaces show (change-over under centralised control).

16.6 About control systems

This system provides two other control systems beside individual control system (one user interface controls one indoor unit). Confirm the following if your unit is of the following control system type:

Type	Description
Group control system	1 user interface controls up to 16 indoor units. All indoor units are equally set.
2 user interface control system	2 user interfaces control 1 indoor unit (in case of group control system, 1 group of indoor units). The unit is individually operated.

NOTICE

Contact your dealer in case of changing the combination or setting of group control and 2 user interface control systems.

17 Energy saving and optimum operation

Observe the following precautions to ensure the system operates properly.

- Adjust the air outlet properly and avoid direct air flow to room inhabitants.
- Adjust the room temperature properly for a comfortable environment. Avoid excessive heating or cooling.
- Prevent direct sunlight from entering a room during cooling operation by using curtains or blinds.
- Ventilate often. Extended use requires special attention to ventilation.
- Keep doors and windows closed. If the doors and windows remain open, air will flow out of your room causing a decrease in the cooling or heating effect.
- Be careful NOT to cool or heat too much. To save energy, keep the temperature setting at a moderate level.
- NEVER place objects near the air inlet or the air outlet of the unit. Doing so may cause a reduced heating/cooling effect or stop operation.
- Turn off the main power supply switch to the unit when the unit is not used for longer periods of time. If the switch is on, it consumes electricity. Before restarting the unit, turn on the main power supply switch 6 hours before operation to ensure smooth running. (Refer to "Maintenance" in the indoor unit manual.)
- When the display shows (time to clean the air filter), ask a qualified service person to clean the filters. (Refer to "Maintenance" in the indoor unit manual.)
- Keep the indoor unit and user interface at least 1 m away from televisions, radios, stereos, and other similar equipment. Failing to do so may cause static or distorted pictures.
- Do NOT place items under the indoor unit, as they may be damaged by water.
- Condensation may form if the humidity is above 80% or if the drain outlet gets blocked.

This VRV IV heat recovery system is equipped with advanced energy saving functionality. Depending on the priority, emphasises can be put on energy saving or comfort level. Several parameters can be selected, resulting in the optimal balance between energy consumption and comfort for the particular application.

Several patterns are available and roughly explained below. Contact your installer or dealer for advice or to modify the parameters to the needs of your building.

Detailed information is given for the installer in the installation manual. He can help you to realize the best balance between energy consumption and comfort.

17.1 Available main operation methods

Basic

The refrigerant temperature is fixed independent from the situation. It corresponds to the standard operation which is known and can be expected from/under previous VRV systems.

Automatic

The refrigerant temperature is set depending on the outdoor ambient conditions. As such adjusting the refrigerant temperature to match the required load (which is also related to the outdoor ambient conditions).

E.g., when your system is operating in cooling, you do not need as much cooling under low outdoor ambient temperatures (e.g., 25°C) as under high outdoor ambient temperatures (e.g., 35°C). Using this idea, the system automatically starts increasing its refrigerant temperature, automatically reducing the delivered capacity and increasing the system's efficiency.

Hi-sensible/economic (cooling/heating)

The refrigerant temperature is set higher/lower (cooling/heating) compared to basic operation. The focus under high sensible mode is comfort feeling for the customer.

The selection method of indoor units is important and has to be considered as the available capacity is not the same as under basic operation.

For details concerning to Hi-sensible applications, please contact your installer.

17.2 Available comfort settings

For each of above modes a comfort level can be selected. The comfort level is related to the timing and the effort (energy consumption) which is put in achieving a certain room temperature by temporarily changing the refrigerant temperature to different values in order to achieve requested conditions more quickly.

- Powerful
- Quick
- Mild
- Eco

INFORMATION

Combinations of Automatic mode together with Hydrobox applications should be considered. The effect of the energy saving function can be very small when low/high (cooling/heating) leaving water temperatures are requested.

18 Maintenance and service

NOTICE

Never inspect or service the unit by yourself. Ask a qualified service person to perform this work.

WARNING

Never replace a fuse with a fuse of a wrong ampere ratings or other wires when a fuse blows out. Use of wire or copper wire may cause the unit to break down or cause a fire.

CAUTION

Do NOT insert fingers, rods or other objects into the air inlet or outlet. Do NOT remove the fan guard. When the fan is rotating at high speed, it will cause injury.

CAUTION: Pay attention to the fan!

It is dangerous to inspect the unit while the fan is running.

Be sure to turn off the main switch before executing any maintenance task.

CAUTION

After a long use, check the unit stand and fitting for damage. If damaged, the unit may fall and result in injury.

NOTICE

Do not wipe the controller operation panel with benzine, thinner, chemical dust cloth, etc. The panel may get discoloured or the coating peeled off. If it is heavily dirty, soak a cloth in water-diluted neutral detergent, squeeze it well and wipe the panel clean. Wipe it with another dry cloth.

18.1 Maintenance after a long stop period

E.g., at the beginning of the season.

- Check and remove everything that might be blocking inlet and outlet vents of indoor units and outdoor units.
- Clean air filters and casings of indoor units. Contact your installer or maintenance person to clean air filters and casings of the indoor unit. Maintenance tips and procedures for cleaning are provided in the installation/operation manuals of dedicated indoor units. Make sure to install cleaned air filters back in the same position.
- Turn on the power at least 6 hours before operating the unit in order to ensure smoother operation. As soon as the power is turned on, the user interface display appears.

18.2 Maintenance before a long stop period

E.g., at the end of the season.

- Let the indoor units run in fan only operation for about half a day in order to dry the interior of the units. Refer to "16.2.2 About cooling, heating, fan only, and automatic operation" on page 74 for details on fan only operation.
- Turn off the power. The user interface display disappears.
- Clean air filters and casings of indoor units. Contact your installer or maintenance person to clean air filters and casings of the indoor unit. Maintenance tips and procedures for cleaning are provided in the installation/operation manuals of dedicated indoor units. Make sure to install cleaned air filters back in the same position.

18.3 About the refrigerant

This product contains fluorinated greenhouse gases. Do NOT vent gases into the atmosphere.

Refrigerant type: R410A

Global warming potential (GWP) value: 2087.5

NOTICE

In Europe, the **greenhouse gas emissions** of the total refrigerant charge in the system (expressed as tonnes CO_2 equivalent) is used to determine the maintenance intervals. Follow the applicable legislation.

Formula to calculate the greenhouse gas emissions: GWP value of the refrigerant × Total refrigerant charge [in kg] / 1000

Please contact your installer for more information.

WARNING

The refrigerant in the system is safe and normally does not leak. If the refrigerant leaks in the room, contact with a fire of a burner, a heater or a cooker may result in a harmful gas.

Turn off any combustible heating devices, ventilate the room and contact the dealer where you purchased the unit.

Do not use the system until a service person confirms that the portion where the refrigerant leaks is repaired.

18.4 After-sales service and warranty

18.4.1 Warranty period

- This product includes a warranty card that was filled in by the dealer at the time of installation. The completed card has to be checked by the customer and stored carefully.
- If repairs to the product are necessary within the warranty period, contact your dealer and keep the warranty card at hand.

18.4.2 Recommended maintenance and inspection

Since dust collects when using the unit for several years, performance of the unit will deteriorate to some extent. As taking apart and cleaning interiors of units requires technical expertise and in order to ensure the best possible maintenance of your units, we recommend to enter into a maintenance and inspection contract on top of normal maintenance activities. Our network of dealers has access to a permanent stock of essential components in order to keep your unit in operation as long as possible. Contact your dealer for more information.

When asking your dealer for an intervention, always state:

- The complete model name of the unit.
- The manufacturing number (stated on the nameplate of the unit).
- The installation date.
- The symptoms or malfunction, and details of the defect.

WARNING

- Do not modify, disassemble, remove, reinstall or repair the unit yourself as incorrect dismantling or installation may cause an electric shock or fire. Contact your dealer.
- In case of accidental refrigerant leaks, make sure there are no naked flames. The refrigerant itself is entirely safe, non-toxic and non-combustible, but it will generate toxic gas when it accidentally leaks into a room where combustible air from fan heaters, gas cookers, etc. is present. Always have qualified service personnel confirm that the point of leakage has been repaired or corrected before resuming operation.

18.4.3 Recommended maintenance and inspection cycles

Be aware that the mentioned maintenance and replacement cycles do not relate to the warranty period of the components.

Component	Inspection cycle	Maintenance cycle (replacements and/or repairs)
Electric motor	1 year	20,000 hours
PCB		25,000 hours
Heat exchanger		5 years
Sensor (thermistor, etc.)		5 years
User interface and switches		25,000 hours
Drain pan		8 years
Expansion valve		20,000 hours
Solenoid valve		20,000 hours

The table assumes the following conditions of use:

- Normal use without frequent starting and stopping of the unit. Depending on the model, we recommend not starting and stopping the machine more than 6 times/hour.
- Operation of the unit is assumed to be 10 hours/day and 2,500 hours/year.

NOTICE

- The table indicates main components. Refer to your maintenance and inspection contract for more details.
- The table indicates recommended intervals of maintenance cycles. However, in order to keep the unit operational as long as possible, maintenance work may be required sooner. Recommended intervals can be used for appropriate maintenance design in terms of budgeting maintenance and inspection fees. Depending on the content of the maintenance and inspection contract, inspection and maintenance cycles may in reality be shorter than listed.

18.4.4 Shortened maintenance and replacement cycles

Shortening of "maintenance cycle" and "replacement cycle" needs to be considered in following situations:

The unit is used in locations where:

- Heat and humidity fluctuate out of the ordinary.
- Power fluctuation is high (voltage, frequency, wave distortion, etc.) (the unit cannot be used if power fluctuation is outside the allowable range).
- Bumps and vibrations are frequent.
- Dust, salt, harmful gas or oil mist such as sulphurous acid and hydrogen sulfide may be present in the air.
- The machine is started and stopped frequently or operation time is long (sites with 24 hour air-conditioning).

Recommended replacement cycle of wear parts

Component	Inspection cycle	Maintenance cycle (replacements and/or repairs)
Air filter	1 year	5 years
High efficiency filter		1 year
Fuse		10 years
Crankcase heater		8 years
Pressure containing parts		In case of corrosion, contact your local dealer.

NOTICE

- The table indicates main components. Refer to your maintenance and inspection contract for more details.
- The table indicates recommended intervals of replacement cycles. However, in order to keep the unit operational as long as possible, maintenance work may be required sooner. Recommended intervals can be used for appropriate maintenance design in terms of budgeting maintenance and inspection fees. Contact your dealer for details.

INFORMATION

Damage due to taking apart or cleaning interiors of units by anyone other than our authorised dealers may not be included in the warranty.

19 Troubleshooting

If one of the following malfunctions occur, take the measures shown below and contact your dealer.

WARNING

Stop operation and shut off the power if anything unusual occurs (burning smells etc.).

Leaving the unit running under such circumstances may cause breakage, electric shock or fire. Contact your dealer.

The system MUST be repaired by a qualified service person:

Malfunction	Measure
If a safety device such as a fuse, a breaker or an earth leakage breaker frequently actuates or the ON/OFF switch does NOT properly work.	Turn OFF the main power switch.
If water leaks from the unit.	Stop the operation.
The operation switch does NOT work well.	Turn OFF the power supply.
If the user interface display indicates the unit number, the operation lamp flashes and the malfunction code appears.	Notify your installer and report the malfunction code.

If the system does NOT properly operate except for the above mentioned cases and none of the above mentioned malfunctions is evident, investigate the system according to the following procedures.

Malfunction	Measure
If the system does not operate at all.	▪ Check if there is no power failure. Wait until power is restored. If power failure occurs during operation, the system automatically restarts immediately after power is restored. ▪ Check if no fuse has blown or breaker is activated. Change the fuse or reset the breaker if necessary.
If the system goes into fan only operation, but as soon as it goes into heating or cooling operation, the system stops.	▪ Check if air inlet or outlet of outdoor or indoor unit is not blocked by obstacles. Remove any obstacles and make sure the air can flow freely. ▪ Check if the user interface display shows (time to clean the air filter). (Refer to "18 Maintenance and service" on page 77 and "Maintenance" in the indoor unit manual.)

Malfunction	Measure
The system operates but cooling or heating is insufficient.	▪ Check if air inlet or outlet of outdoor or indoor unit is not blocked by obstacles. Remove any obstacles and make sure the air can flow freely. ▪ Check if the air filter is not clogged (refer to "Maintenance" in the indoor unit manual). ▪ Check the temperature setting. ▪ Check the fan speed setting on your user interface. ▪ Check for open doors or windows. Close doors and windows to prevent wind from coming in. ▪ Check if there are too many occupants in the room during cooling operation. Check if the heat source of the room is excessive. ▪ Check if direct sunlight enters the room. Use curtains or blinds. ▪ Check if the air flow angle is proper.

If after checking all above items, it is impossible to fix the problem yourself, contact your installer and state the symptoms, the complete model name of the unit (with manufacturing number if possible) and the installation date (possibly listed on the warranty card).

19.1 Error codes: Overview

In case a malfunction code appears on the indoor unit user interface display, contact your installer and inform the malfunction code, the unit type, and serial number (you can find this information on the nameplate of the unit).

For your reference, a list with malfunction codes is provided. You can, depending on the level of the malfunction code, reset the code by pushing the ON/OFF button. If not, ask your installer for advice.

Main code	Contents
A0	External protection device was activated
A1	EEPROM failure (indoor)
A3	Drain system malfunction (indoor)
A6	Fan motor malfunction (indoor)
A7	Swing flap motor malfunction (indoor)
A9	Expansion valve malfunction (indoor)
AF	Drain malfunction (indoor unit)
AH	Filter dust chamber malfunction (indoor)
AJ	Capacity setting malfunction (indoor)
C1	Transmission malfunction between main PCB and sub PCB (indoor)
C4	Heat exchanger thermistor malfunction (indoor; liquid)
C5	Heat exchanger thermistor malfunction (indoor; gas)
C9	Suction air thermistor malfunction (indoor)
CA	Discharge air thermistor malfunction (indoor)
CE	Movement detector or floor temperature sensor malfunction (indoor)
CJ	User interface thermistor malfunction (indoor)
E1	PCB malfunction (outdoor)
E2	Current leakage detector was activated (outdoor)
E3	High pressure switch was activated
E4	Low pressure malfunction (outdoor)
E5	Compressor lock detection (outdoor)
E7	Fan motor malfunction (outdoor)

Main code	Contents
E9	Electronic expansion valve malfunction (outdoor)
F3	Discharge temperature malfunction (outdoor)
F4	Abnormal suction temperature (outdoor)
F6	Refrigerant overcharge detection
H3	High pressure switch malfunction
H4	Low pressure switch malfunction
H7	Fan motor trouble (outdoor)
H9	Ambient temperature sensor malfunction (outdoor)
J1	Pressure sensor malfunction
J2	Current sensor malfunction
J3	Discharge temperature sensor malfunction (outdoor)
J4	Heat exchanger gas temperature sensor malfunction (outdoor)
J5	Suction temperature sensor malfunction (outdoor)
J6	De-icing temperature sensor malfunction (outdoor)
J7	Liquid temperature sensor (after subcool HE) malfunction (outdoor)
J8	Liquid temperature sensor (coil) malfunction (outdoor)
J9	Gas temperature sensor (after subcool HE) malfunction (outdoor)
JA	High pressure sensor malfunction (S1NPH)
JC	Low pressure sensor malfunction (S1NPL)
L1	INV PCB abnormal
L4	Fin temperature abnormal
L5	Inverter PCB faulty
L8	Compressor over current detected
L9	Compressor lock (startup)
LC	Transmission outdoor unit - inverter: INV transmission trouble
P1	INV unbalanced power supply voltage
P2	Autocharge operation related
P4	Fin thermistor malfunction
P8	Autocharge operation related
P9	Autocharge operation related
PE	Autocharge operation related
PJ	Capacity setting malfunction (outdoor)
U0	Abnormal low pressure drop, faulty expansion valve
U1	Reversed power supply phase malfunction
U2	INV voltage power shortage
U3	System test run not yet executed
U4	Faulty wiring indoor/outdoor
U5	Abnormal user interface - indoor communication
U7	Faulty wiring to outdoor/outdoor
U8	Abnormal main-sub user interface communication
U9	System mismatch. Wrong type of indoor units combined. Indoor unit malfunction.
UA	Connection malfunction over indoor units or type mismatch
UC	Centralised address duplication
UE	Malfunction in communication centralised control device - indoor unit
UF	Auto address malfunction (inconsistency)
UH	Auto address malfunction (inconsistency)

19.2 Symptoms that are NOT system malfunctions

The following symptoms are NOT system malfunctions:

19.2.1 Symptom: The system does not operate

- The air conditioner does not start immediately after the ON/OFF button on the user interface is pressed. If the operation lamp lights, the system is in normal condition. To prevent overloading of the compressor motor, the air conditioner starts 5 minutes after it is turned ON again in case it was turned OFF just before. The same starting delay occurs after the operation mode selector button was used.
- If "Under Centralized Control" is displayed on the user interface, pressing the operation button causes the display to blink for a few seconds. The blinking display indicates that the user interface cannot be used.
- The system does not start immediately after the power supply is turned on. Wait one minute until the micro computer is prepared for operation.

19.2.2 Symptom: Cool/Heat cannot be changed over

- When the display shows (change-over under centralized control), it shows that this is a slave user interface.
- When the cool/heat changeover remote control switch is installed and the display shows (change-over under centralized control), this is because cool/heat changeover is controlled by the cool/ heat changeover remote control switch. Ask your dealer where the remote control switch is installed.

19.2.3 Symptom: Fan operation is possible, but cooling and heating do not work

Immediately after the power is turned on. The micro computer is getting ready to operate and is performing a communication check with all indoor units. Please wait 12 minutes maximally until this process is finished.

19.2.4 Symptom: The fan speed does not correspond to the setting

The fan speed does not change even if the fan speed adjustment button is pressed. During heating operation, when the room temperature reaches the set temperature, the outdoor unit goes off and the indoor unit changes to whisper fan speed. This is to prevent cold air blowing directly on occupants of the room. The fan speed will not change even when another indoor unit is in heating operation, if the button is pressed.

19.2.5 Symptom: The fan direction does not correspond to the setting

The fan direction does not correspond with the user interface display. The fan direction does not swing. This is because the unit is being controlled by the micro computer.

19.2.6 Symptom: White mist comes out of a unit (Indoor unit)

- When humidity is high during cooling operation. If the interior of an indoor unit is extremely contaminated, the temperature distribution inside a room becomes uneven. It is necessary to clean the interior of the indoor unit. Ask your dealer for details on cleaning the unit. This operation requires a qualified service person.
- Immediately after the cooling operation stops and if the room temperature and humidity are low. This is because warm refrigerant gas flows back into the indoor unit and generates steam.

19.2.7 Symptom: White mist comes out of a unit (Indoor unit, outdoor unit)

When the system is changed over to heating operation after defrost operation. Moisture generated by defrost becomes steam and is exhausted.

19.2.8 Symptom: The user interface display reads "U4" or "U5" and stops, but then restarts after a few minutes

This is because the user interface is intercepting noise from electric appliances other than the air conditioner. The noise prevents communication between the units, causing them to stop. Operation automatically restarts when the noise ceases.

19.2.9 Symptom: Noise of air conditioners (Indoor unit)

- A "zeen" sound is heard immediately after the power supply is turned on. The electronic expansion valve inside an indoor unit starts working and makes the noise. Its volume will reduce in about one minute.
- A continuous low "shah" sound is heard when the system is in cooling operation or at a stop. When the drain pump (optional accessories) is in operation, this noise is heard.
- A "pishi-pishi" squeaking sound is heard when the system stops after heating operation. Expansion and contraction of plastic parts caused by temperature change make this noise.
- A low "sah", "choro-choro" sound is heard while the indoor unit is stopped. When another indoor unit is in operation, this noise is heard. In order to prevent oil and refrigerant from remaining in the system, a small amount of refrigerant is kept flowing.

19.2.10 Symptom: Noise of air conditioners (Indoor unit, outdoor unit)

- A continuous low hissing sound is heard when the system is in cooling or defrost operation. This is the sound of refrigerant gas flowing through both indoor and outdoor units.
- A hissing sound which is heard at the start or immediately after stopping operation or defrost operation. This is the noise of refrigerant caused by flow stop or flow change.

19.2.11 Symptom: Noise of air conditioners (Outdoor unit)

When the tone of operating noise changes. This noise is caused by the change of frequency.

19.2.12 Symptom: Dust comes out of the unit

When the unit is used for the first time in a long time. This is because dust has gotten into the unit.

19.2.13 Symptom: The units can give off odours

The unit can absorb the smell of rooms, furniture, cigarettes, etc., and then emit it again.

19.2.14 Symptom: The outdoor unit fan does not spin

During operation. The speed of the fan is controlled in order to optimise product operation.

19.2.15 Symptom: The display shows "88"

This is the case immediately after the main power supply switch is turned on and means that the user interface is in normal condition. This continues for 1 minute.

19.2.16 Symptom: The compressor in the outdoor unit does not stop after a short heating operation

This is to prevent refrigerant from remaining in the compressor. The unit will stop after 5 to 10 minutes.

19.2.17 Symptom: The inside of an outdoor unit is warm even when the unit has stopped

This is because the crankcase heater is warming the compressor so that the compressor can start smoothly.

19.2.18 Symptom: Hot air can be felt when the indoor unit is stopped

Several different indoor units are being run on the same system. When another unit is running, some refrigerant will still flow through the unit.

20 Relocation

Contact your dealer for removing and reinstalling the total unit. Moving units requires technical expertise.

21 Disposal

This unit uses hydrofluorocarbon. Contact your dealer when discarding this unit.

NOTICE

Do NOT try to dismantle the system yourself: dismantling of the system, treatment of the refrigerant, oil and other parts MUST comply with applicable legislation. Units MUST be treated at a specialised treatment facility for reuse, recycling and recovery.

22 Glossary

Dealer
Sales distributor for the product.

Authorized installer
Technical skilled person who is qualified to install the product.

User
Person who is owner of the product and/or operates the product.

Applicable legislation
All international, European, national and local directives, laws, regulations and/or codes that are relevant and applicable for a certain product or domain.

Service company
Qualified company which can perform or coordinate the required service to the product.

Installation manual
Instruction manual specified for a certain product or application, explaining how to install, configure and maintain it.

Operation manual
Instruction manual specified for a certain product or application, explaining how to operate it.

Maintenance instructions
Instruction manual specified for a certain product or application, which explains (if relevant) how to install, configure, operate and/or maintain the product or application.

Accessories
Labels, manuals, information sheets and equipment that are delivered with the product and that need to be installed according to the instructions in the accompanying documentation.

Optional equipment
Equipment made or approved by Daikin that can be combined with the product according to the instructions in the accompanying documentation.

Field supply
Equipment NOT made by Daikin that can be combined with the product according to the instructions in the accompanying documentation.

EAC

Copyright 2014 Daikin

DAIKIN EUROPE N.V.

Zandvoordestraat 300, B-8400 Oostende, Belgium

4P353997-1C 2018.04