DAIKIN

INSTALLATION AND OPERATION MANUAL

VRV-WIV System Air Conditioner

RWEYQ8T8Y1B
RWEYQ10T8Y1B

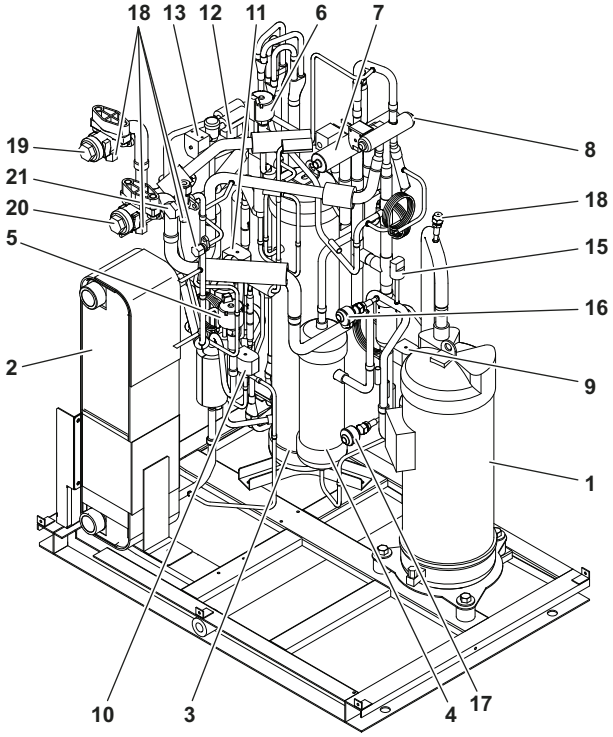
18
13
12
11
6
7
19
21
20
5
2
8
18
15
16
9
1
10
3
4
17

1

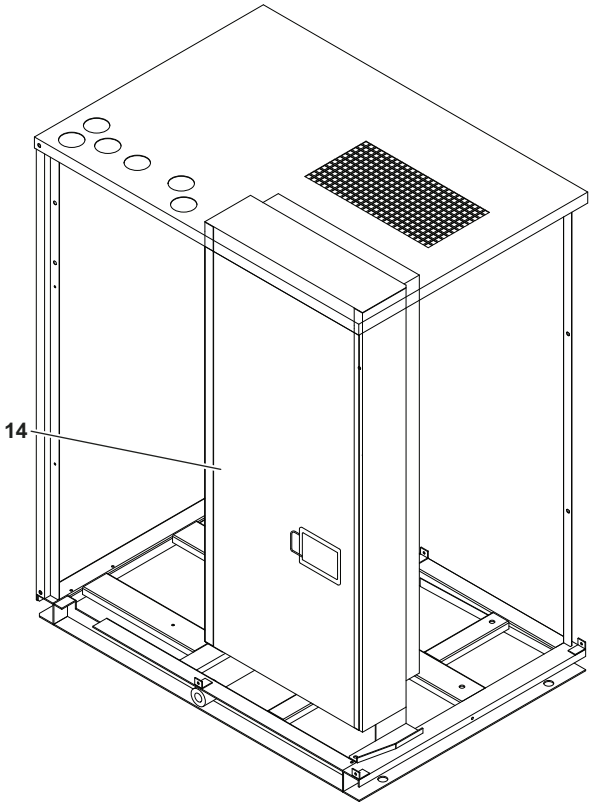
14

2

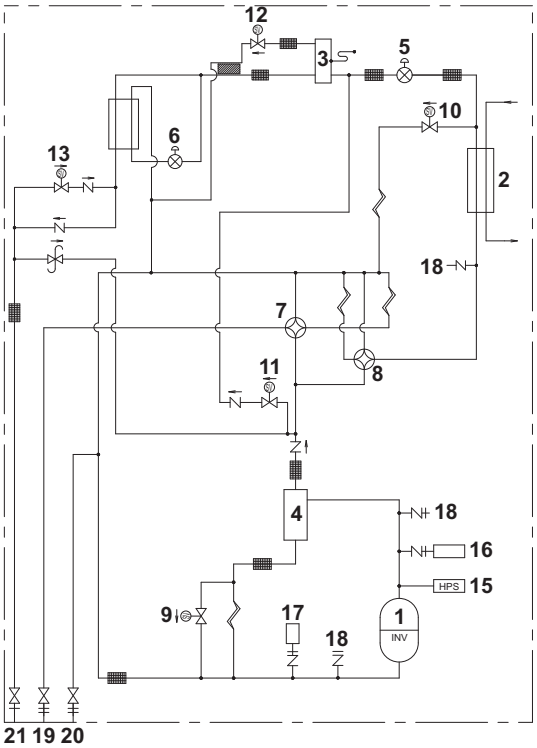
12
3
5
10
6
13
2
18
7
8
11
4
18
16
HPS
15
9
17
18
1
INV
21
19
20

3

CE - DECLARATION-OF-CONFORMITY
CE - KONFORMITÄTSERKLÄRUNG
CE - DECLARATION-DE-CONFORMITE
CE - CONFORMITEITSVERKLARING
CE - DECLARACION-DE-CONFORMIDAD
CE - DICHIARAZIONE-DI-CONFORMITA
CE - ΔΗΛΩΣΗ ΣΥΜΜΟΡΦΩΣΗΣ
CE - DECLARAÇÃO-DE-CONFORMIDADE
CE - ЗАЯВЛЕНИЕ-О-СООТВЕТСТВИИ
CE - OVERENSSTEMMELSESERKLÆRING
CE - FÖRSÄKRAN-OM-ÖVERENSTÄMMELSE
CE - ERKLÆRING OM-SAMSVAR
CE - ILMOITUS-YHDENMUKAISUUDESTA
CE - PROHLÁŠENÍ-O-SHODĚ
CE - IZJAVA-O-USKLAĐENOSTI
CE - MEGFELELŐSÉGI-NYILATKOZAT
CE - DEKLARACJA-ZGODNOŚCI
CE - DECLARAŢIE-DE-CONFORMITATE
CE - IZJAVA O SKLADNOSTI
CE - VASTAVUSDEKLARATSIOON
CE - ДЕКЛАРАЦИЯ-ЗА-СЪОТВЕТСТВИЕ
CE - ATITIKTIES-DEKLARACIJA
CE - ATBILSTĪBAS-DEKLARĀCIJA
CE - VYHLÁSENIE-ZHODY
CE - UYGUNLUK-BEYANI

Daikin Europe N.V.

01 (GB) declares under its sole responsibility that the air conditioning models to which this declaration relates:
02 (D) erklärt auf seine alleinige Verantwortung daß die Modelle der Klimageräte für die diese Erklärung bestimmt ist:
03 (F) déclare sous sa seule responsabilité que les appareils d'air conditionné visés par la présente déclaration:
04 (NL) verklaart hierbij op eigen exclusieve verantwoordelijkheid dat de airconditioning units waarop deze verklaring betrekking heeft:
05 (E) declara baja su única responsabilidad que los modelos de aire acondicionado a los cuales hace referencia la declaración:
06 (I) dichiara sotto sua responsabilità che i condizionatori modello a cui è riferita questa dichiarazione:
07 (GR) δηλώνει με αποκλειστική της ευθύνη ότι τα μοντέλα των κλιματιστικών συσκευών στα οποία αναφέρεται η παρούσα δήλωση:
08 (P) declara sob sua exclusiva responsabilidade que os modelos de ar condicionado a que esta declaração se refere:
09 (RUS) заявляет, исключительно под свою ответственность, что модели кондиционеров воздуха, к которым относится настоящее заявление:
10 (DK) erklærer under eneansvar, at klimaanlægmodellerne, som denne deklaration vedrører:
11 (S) deklarerar i egenskap av huvudansvarig, att luftkonditioneringsmodellerna som berörs av denna deklaration innebär att:
12 (N) erklærer et fullstendig ansvar for at de luftkondisjoneringsmodeller som berøres av denne deklarasjonen, innebærer at:
13 (FIN) ilmoittaa yksinomaan omalla vastuullaan, että tämän ilmoituksen tarkoittamat ilmastointilaitteiden mallit:
14 (CZ) prohlašuje ve své plné odpovědnosti, že modely klimatizace, k nimž se toto prohlášení vztahuje:
15 (HR) izjavljuje pod isključivo vlastitom odgovornošću da su modeli klima uređaja na koje se ova izjava odnosi:
16 (H) teljes felelőssége tudatában kijelenti, hogy a klímaberendezés modellek, melyekre e nyilatkozat vonatkozik:
17 (PL) deklaruje na własną i wyłączną odpowiedzialność, że modele klimatyzatorów, których dotyczy niniejsza deklaracja:
18 (RO) declară pe proprie răspundere că aparatele de aer condiţionat la care se referă această declaraţie:
19 (SLO) z vso odgovornostjo izjavlja, da so modeli klimatskih naprav, na katere se izjava nanaša:
20 (EST) kinnitab oma täielikul vastutusel, et käesoleva deklaratsiooni alla kuuluvad kliimaseadmete mudelid:
21 (BG) декларира на своя отговорност, че моделите климатична инсталация, за които се отнася тази декларация:
22 (LT) visiška savo atsakomybe skelbia, kad oro kondicionavimo prietaisų modeliai, kuriems yra taikoma ši deklaracija:
23 (LV) ar pilnu atbildību apliecina, ka tālák uzskaitīto modeļu gaisa kondicionētāji, uz kuriem attiecas šī deklarācija:
24 (SK) vyhlasuje na vlastnú zodpovednosť, že tieto klimatizačné modely, na ktoré sa vzťahuje toto vyhlásenie:
25 (TR) tamamen kendi sorumluluğunda olmak üzere bu bildirinin ilgili olduğu klima modellerinin aşağıdaki gibi olduğunu beyan eder:

RWEYQ8T8Y1B*, RWEYQ10T8Y1B*,

* = , , 1, 2, 3, ..., 9

01 are in conformity with the following standard(s) or other normative document(s), provided that these are used in accordance with our instructions:
02 der/den folgenden Norm(en) oder einem anderen Normdokument oder -dokumenten entspricht/entsprechen, unter der Voraussetzung, daß sie gemäß unseren Anweisungen eingesetzt werden:
03 sont conformes à la/aux norme(s) ou autre(s) document(s) normatif(s), pour autant qu'ils soient utilisés conformément à nos instructions:
04 conform de volgende norm(en) of één of meer andere bindende documenten zijn, op voorwaarde dat ze worden gebruikt overeenkomstig onze instructies:
05 están en conformidad con la(s) siguiente(s) norma(s) u otro(s) documento(s) normativo(s), siempre que sean utilizados de acuerdo con nuestras instrucciones:
06 sono conformi al(i) seguente(i) standard(s) o altro(i) documento(i) a carattere normativo, a patto che vengano usati in conformità alle nostre istruzioni:
07 είναι σύμφωνα με το(α) ακόλουθο(α) πρότυπο(α) ή άλλο έγγραφο(α) κανονισμών, υπό την προϋπόθεση ότι χρησιμοποιούνται σύμφωνα με τις οδηγίες μας:
08 estão em conformidade com a(s) seguinte(s) norma(s) ou outro(s) documento(s) normativo(s), desde que estes sejam utilizados de acordo com as nossas instruções:
09 соответствуют следующим стандартам или другим нормативным документам, при условии их использования согласно нашим инструкциям:
10 overholder følgende standard(er) eller andet/andre retningsgivende dokument(er), forudsat at disse anvendes i henhold til vore instrukser:
11 respektive utrustning är utförd i överensstämmelse med och följer följande standard(er) eller andra normgivande dokument, under förutsättning att användning sker i överensstämmelse med våra instruktioner:
12 respektive utstyr er i overensstemmelse med følgende standard(er) eller andre normgivende dokument(er), under forutsetning av at disse brukes i henhold til våre instrukser:
13 vastaavat seuraavien standardien ja muiden ohjeellisten dokumenttien vaatimuksia edellyttäen, että niitä käytetään ohjeidemme mukaisesti:
14 za předpokladu, že jsou využívány v souladu s našimi pokyny, odpovídají následujícím normám nebo normativním dokumentům:
15 u skladu sa slijedećim standardom(ima) ili drugim normativnim dokumentom(ima), uz uvjet da se oni koriste u skladu s našim uputama:
16 megfelelnek az alábbi szabvány(ok)nak vagy egyéb irányadó dokumentum(ok)nak, ha azokat előírás szerint használják:
17 spełniają wymogi następujących norm i innych dokumentów normalizacyjnych, pod warunkiem że używane są zgodnie z naszymi instrukcjami:
18 sunt în conformitate cu următorul (următoarele) standard(e) sau alt(e) document(e) normativ(e), cu condiţia ca acestea să fie utilizate în conformitate cu instrucţiunile noastre:
19 skladni z naslednjimi standardi in drugimi normativi, pod pogojem, da se uporabljajo v skladu z našimi navodili:
20 on vastavuses järgmis(t)e standardi(te)ga või teiste normatiivsete dokumentidega, kui neid kasutatakse vastavalt meie juhenditele:
21 съответстват на следните стандарти или други нормативни документи, при условие, че се използват съгласно нашите инструкции:
22 atitinka žemiau nurodytus standartus ir (arba) kitus norminius dokumentus su sąlyga, kad yra naudojami pagal mūsų nurodymus:
23 tad, ja lietoti atbilstoši ražotāja norādījumiem, atbilst sekojošiem standartiem un citiem normatīviem dokumentiem:
24 sú v zhode s nasledovnou(ými) normou(ami) alebo iným(i) normatívnym(i) dokumentom(ami), za predpokladu, že sa používajú v súlade s našim návodom:
25 ürünün, talimatlarımıza göre kullanılması koşuluyla aşağıdaki standartlar ve norm belirten belgelerle uyumludur:

EN60335-2-40,

01 following the provisions of:
02 gemäß den Vorschriften der:
03 conformément aux stipulations des:
04 overeenkomstig de bepalingen van:
05 siguiendo las disposiciones de:
06 secondo le prescrizioni per:
07 με τήρηση των διατάξεων των:
08 de acordo com o previsto em:
09 в соответствии с положениями:
10 under iagttagelse af bestemmelserne i:
11 enligt villkoren i:
12 gitt i henhold til bestemmelsene i:
13 noudattaen määräyksiä:
14 za dodržení ustanovení předpisu:
15 prema odredbama:
16 követi a(z):
17 zgodnie z postanowieniami Dyrektyw:
18 în urma prevederilor:
19 ob upoštevanju določb:
20 vastavalt nõuetele:
21 следвайки клаузите на:
22 laikantis nuostatų, pateikiamų:
23 ievērojot prasības, kas noteiktas:
24 održiavajúc ustanovenia:
25 bunun koşullarına uygun olarak:

Machinery 2006/42/EC ***
Electromagnetic Compatibility 2004/108/EC *
Pressure Equipment 97/23/EC **

01 Directives, as amended.
02 Direktiven, gemäß Änderung.
03 Directives, telles que modifiées.
04 Richtlijnen, zoals geamendeerd.
05 Directivas, según lo enmendado.
06 Direttive, come da modifica.
07 Οδηγιών, όπως έχουν τροποποιηθεί.
08 Directivas, conforme alteração em.
09 Директив со всеми поправками.
10 Direktiver, med senere ændringer.
11 Direktiv, med företagna ändringar.
12 Direktiver, med foretatte endringer.
13 Direktiivejä, sellaisina kuin ne ovat muutettuina.
14 v platném znění.
15 Smjernice, kako je izmijenjeno.
16 irányelv(ek) és módosításaik rendelkezéseit.
17 z późniejszymi poprawkami.
18 Directivelor, cu amendamentele respective.
19 Direktive z vsemi spremembami.
20 Direktiivid koos muudatustega.
21 Директиви, с техните изменения.
22 Direktyvose su papildymais.
23 Direktīvās un to papildinājumos.
24 Smernice, v platnom znení.
25 Değiştirilmiş halleriyle Yönetmelikler.

01 * as set out in <A> and judged positively by <B> according to the **Certificate** <C>.
** as set out in the Technical Construction File <D> and judged positively by <E> (Applied module <F>). <G>. Risk category <H>. Also refer to next page.
02 * wie in <A> aufgeführt und von <B> positiv beurteilt gemäß **Zertifikat** <C>.
** wie in der Technischen Konstruktionsakte <D> aufgeführt und von <E> (Angewandtes Modul <F>) positiv ausgezeichnet. <G>. Risikoart <H>. Siehe auch nächste Seite.
03 * tel que défini dans <A> et évalué positivement par <B> conformément au **Certificat** <C>.
** tel que stipulé dans le Fichier de Construction Technique <D> et jugé positivement par <E> (Module appliqué <F>). <G>. Catégorie de risque <H>. Se reporter également à la page suivante.
04 * zoals vermeld in <A> en positief beoordeeld door <B> overeenkomstig **Certificaat** <C>.
** zoals vermeld in het Technisch Constructiedossier <D> en in orde bevonden door <E> (Toegepaste module <F>). <G>. Risicocategorie <H>. Zie ook de volgende pagina.
05 * como se establece en <A> y es valorado positivamente por <B> de acuerdo con el **Certificado** <C>.
** tal como se expone en el Archivo de Construcción Técnica <D> y juzgado positivamento por <E> (Modulo aplicado <F>). <G>. Categoría de riesgo <H>. Consulte también la siguiente página.
06 * delineato nel <A> e giudicato positivamente da <B> secondo il **Certificato** <C>.
** delineato nel File Tecnico di Costruzione <D> e giudicato positivamente da <E> (Modulo <F> applicato). <G>. Categoria di rischio <H>. Fare riferimento anche alla pagina successiva.
07 * όπως καθορίζεται στο <A> και κρίνεται θετικά από το <B> σύμφωνα με το **Πιστοποιητικό** <C>.
** όπως προσδιορίζεται στο Αρχείο Τεχνικής Κατασκευής <D> και κρίνεται θετικά από το <E> (Χρησιμοποιούμενη υπομονάδα <F>). <G>. Κατηγορία επικινδυνότητας <H>. Ανατρέξτε επίσης στην επόμενη σελίδα.
08 * tal como estabelecido em <A> e com o parecer positivo de <B> de acordo com o **Certificado** <C>.
** tal como estabelecido no Ficheiro Técnico de Construção <D> e com o parecer positivo de <E> (Módulo aplicado <F>). <G>. Categoria de risco <H>. Consultar também a página seguinte.
09 * как указано в <A> и в соответствии с положительным решением <B> согласно **Свидетельству** <C>.
** как указано в Досье технического топкования <D> и в соответствии с положительным решением <E> (Прикладной модуль <F>). <G>. Категория риска <H>. Также смотрите следующую страницу.
10 * som anført i <A> og positivt vurderet af <B> i henhold til **Certifikat** <C>.
** som anført i den Tekniske Konstruktionsfil <D> og positivt vurderet af <E> (Anvendt modul <F>). <G>. Risikoklasse <H>. Se også næste side.
11 * enligt <A> och godkänts av <B> enligt **Certifikatet** <C>.
** i enlighet med den Tekniska Konstruktionsfilen <D> som positivt intygats av <E> (Fastsatt modul <F>). <G>. Riskkategori <H>. Se även nästa sida.
12 * som det fremkommer i <A> og gjennom positiv bedømmelse av <B> ifølge **Sertifikat** <C>.
** som det fremkommer i den Tekniske Konstruksjonsfilen <D> og gjennom positiv bedømmelse av <E> (Anvendt modul <F>). <G>. Risikokategori <H>. Se også neste side.
13 * jotka on esitetty asiakirjassa <A> ja jotka <B> on hyväksynyt **Sertifikaatin** <C> mukaisesti.
** jotka on esitetty Teknisessä Asiakirjassa <D> ja jotka <E> on hyväksynyt (Sovellettu moduli <F>). <G>. Vaaraluokka <H>. Katso myös seuraava sivu.
14 * jak bylo uvedeno v <A> a pozitivně zjištěno <B> v souladu s **osvědčením** <C>.
** jak bylo uvedeno v souboru technické konstrukce <D> a pozitivně zjištěno <E> (použitý modul <F>). <G>. Kategorie rizik <H>. Viz také následující strana.
15 * kako je izloženo u <A> i pozitivno ocijenjeno od strane <B> prema **Certifikatu** <C>.
** kako je izloženo u Datoteci o tehničkoj konstrukciji <D> i pozitivno ocijenjeno od strane <E> (Primijenjen modul <F>). <G>. Kategorija opasnosti <H>. Također pogledajte na slijedećoj stranici.
16 * a(z) <A> alapján, a(z) <B> igazolta a megfelelést, a(z) **<C> tanúsítvány** szerint.
** a(z) <D> műszaki konstrukciós dokumentáció alapján, a(z) <E> igazolta a megfelelést (alkalmazott modul: <F>). <G>. Veszélyességi kategória <H>. Lásd még a következő oldalon.
17 * zgodnie z dokumentacją <A>, pozytywną opinią <B> i **Świadectwem** <C>.
** zgodnie z archiwalną dokumentacją konstrukcyjną <D> i pozytywną opinią <E> (Zastosowany moduł <F>). <G>. Kategoria zagrożenia <H>. Patrz także następna strona.
18 * aşa cum este stabilit în <A> şi apreciat pozitiv de <B> în conformitate cu **Certificatul** <C>.
** conform celor stabilite în Dosarul tehnic de construcţie <D> şi apreciate pozitiv de <E> (Modul aplicat <F>). <G>. Categorie de risc <H>. Consultaţi de asemenea pagina următoare.
19 * kot je določeno v <A> in odobreno s strani <B> v skladu s **certifikatom** <C>.
** kot je določeno v tehnični mapi <D> in odobreno s strani <E> (Uporabljen modul <F>). <G>. Kategorija tveganja <H>. Glejte tudi na naslednji strani.
20 * nagu on näidatud dokumendis <A> ja heaks kiidetud <B> järgi vastavalt **sertifikaadile** <C>.
** nagu on näidatud tehnilises dokumentatsioonis <D> ja heaks kiidetud <E> järgi (lisamoodul <F>). <G>. Riskikategooria <H>. Vaadake ka järgmist lehekülge.
21 * както е изложено в <A> и оценено положително от <B> съгласно **Сертификата** <C>.
** както е заложено в Акта за техническа конструкция <D> и оценено положително от <E> (Приложен модул <F>). <G>. Категория риск <H>. Вижте също на следващата страница.
22 * kaip nustatyta <A> ir kaip teigiamai nuspręsta <B> pagal **Sertifikatą** <C>.
** kaip nurodyta Techninėje konstrukcijos byloje <D> ir patvirtinta <E> (taikomas modulis <F>). <G>. Rizikos kategorija <H>. Taip pat žiūrėkite ir kitą puslapį.
23 * kā norādīts <A> un atbilstoši <B> pozitīvajam vērtējumam saskaņā ar **sertifikātu** <C>.
** kā noteikts tehniskajā dokumentācijā <D>, atbilstoši <E> pozitīvajam lēmumam (piekritīgā sadaļa: <F>). <G>. Riska kategorija <H>. Skat. arī nākošo lappusi.
24 * ako bolo uvedené v <A> a pozitívne zistené <B> v súlade s **osvedčením** <C>.
** ako je to stanovené v Súbore technickej konštrukcie <D> a kladne posúdené <E> (Aplikovaný modul <F>). <G>. Kategória nebezpečia <H>. Viď tiež nasledovnú stranu.
25 * <A>'da belirtildiği gibi ve <C> **Sertifikasına** göre <B> tarafından olumlu olarak değerlendirildiği gibi.
** <D> Teknik Yapı Dosyasında belirtildiği gibi ve <E> tarafından olumlu olarak (Uygulanan modül <F>) değerlendirilmiştir. <G>. Risk kategorisi <H>. Ayrıca bir sonraki sayfaya bakın.

<A>	DAIKIN.TCF.030A11/01-2015
<B>	TÜV (NB1856)
<C>	12080901.T30
<D>	Daikin.TCFP.001
<E>	AIB Vinçotte (NB0026)
<F>	D1
<G>	—
<H>	II

01 *** Daikin Europe N.V. is authorised to compile the Technical Construction File.
02 *** Daikin Europe N.V. hat die Berechtigung die Technische Konstruktionsakte zusammenzustellen.
03 *** Daikin Europe N.V. est autorisé à compiler le Dossier de Construction Technique.
04 *** Daikin Europe N.V. is bevoegd om het Technisch Constructiedossier samen te stellen.
05 *** Daikin Europe N.V. está autorizado a compilar el Archivo de Construcción Técnica.
06 *** Daikin Europe N.V. è autorizzata a redigere il File Tecnico di Costruzione.
07 *** Η Daikin Europe N.V. είναι εξουσιοδοτημένη να συντάξει τον Τεχνικό φάκελο κατασκευής.
08 *** A Daikin Europe N.V. está autorizada a compilar a documentação técnica de fabrico.
09 *** Компания Daikin Europe N.V. уполномочена составить Комплект технической документации.
10 *** Daikin Europe N.V. er autoriseret til at udarbejde de tekniske konstruktionsdata.
11 *** Daikin Europe N.V. är bemyndigade att sammanställa den tekniska konstruktionsfilen.
12 *** Daikin Europe N.V. har tillatelse til å kompilere den Tekniske konstruksjonsfilen.
13 *** Daikin Europe N.V. on valtuutettu laatimaan Teknisen asiakirjan.
14 *** Společnost Daikin Europe N.V. má oprávnění ke kompilaci souboru technické konstrukce.
15 *** Daikin Europe N.V. je ovlašten za izradu Datoteke o tehničkoj konstrukciji.
16 *** A Daikin Europe N.V. jogosult a műszaki konstrukciós dokumentáció összeállítására.
17 *** Daikin Europe N.V. ma upoważnienie do zbierania i opracowywania dokumentacji konstrukcyjnej.
18 *** Daikin Europe N.V. este autorizat să compileze Dosarul tehnic de construcţie.
19 *** Daikin Europe N.V. je pooblaščen za sestavo datoteke s tehnično mapo.
20 *** Daikin Europe N.V. on volitatud koostama tehnilist dokumentatsiooni.
21 *** Daikin Europe N.V. е оторизирана да състави Акта за техническа конструкция.
22 *** Daikin Europe N.V. yra įgaliota sudaryti šį techninės konstrukcijos failą.
23 *** Daikin Europe N.V. ir autorizēts sastādīt tehnisko dokumentāciju.
24 *** Spoločnosť Daikin Europe N.V. je oprávnená vytvoriť súbor technickej konštrukcie.
25 *** Daikin Europe N.V. Teknik Yapı Dosyasını derlemeye yetkilidir.

2P399209-1

CE - DECLARATION-OF-CONFORMITY
CE - KONFORMITÄTSERKLÄRUNG
CE - DECLARATION-DE-CONFORMITE
CE - CONFORMITEITSVERKLARING
CE - DECLARACION-DE-CONFORMIDAD
CE - DICHIARAZIONE-DI-CONFORMITA
CE - ΔΗΛΩΣΗ ΣΥΜΜΟΡΦΩΣΗΣ
CE - DECLARAÇÃO-DE-CONFORMIDADE
CE - ЗАЯВЛЕНИЕ-О-СООТВЕТСТВИИ
CE - OVERENSSTEMMELSESERKLÆRING
CE - FÖRSÄKRAN-OM-ÖVERENSTÄMMELSE
CE - ERKLÆRING OM-SAMSVAR
CE - ILMOITUS-YHDENMUKAISUUDESTA
CE - PROHLÁŠENÍ-O-SHODĚ
CE - IZJAVA-O-USKLAĐENOSTI
CE - MEGFELELŐSÉGI-NYILATKOZAT
CE - DEKLARACJA-ZGODNOŚCI
CE - DECLARAŢIE-DE-CONFORMITATE
CE - IZJAVA O SKLADNOSTI
CE - VASTAVUSDEKLARATSIOON
CE - ДЕКЛАРАЦИЯ-ЗА-СЪОТВЕТСТВИЕ
CE - ATITIKTIES-DEKLARACIJA
CE - ATBILSTĪBAS-DEKLARĀCIJA
CE - VYHLÁSENIE-ZHODY
CE - UYGUNLUK-BEYANI

01 (GB) continuation of previous page:
02 (D) Fortsetzung der vorherigen Seite:
03 (F) suite de la page précédente:
04 (NL) vervolg van vorige pagina:
05 (E) continuación de la página anterior:
06 (I) continua dalla pagina precedente:
07 (GR) συνέχεια από την προηγούμενη σελίδα:
08 (P) continuação da página anterior:
09 (RUS) продолжение предыдущей страницы:
10 (DK) fortsat fra forrige side:
11 (S) fortsättning från föregående sida:
12 (N) fortsettelse fra forrige side:
13 (FIN) jatkoa edellisellä sivulta:
14 (CZ) pokračování z předchozí strany:
15 (HR) nastavak s prethodne stranice:
16 (H) folytatás az előző oldalról:
17 (PL) ciąg dalszy z poprzedniej strony:
18 (RO) continuarea paginii anterioare:
19 (SLO) nadaljevanje s prejšnje strani:
20 (EST) eelmise leheküljе järg:
21 (BG) продължение от предходната страница:
22 (LT) ankstesnio puslapio tęsinys:
23 (LV) iepriekšējās lappuses turpinājums:
24 (SK) pokračovanie z predchádzajúcej strany:
25 (TR) önceki sayfadan devam:

01 Design Specifications of the models to which this declaration relates:
02 Konstruktionsdaten der Modelle auf die sich diese Erklärung bezieht:
03 Spécifications de conception des modèles auxquels se rapporte cette déclaration:
04 Ontwerpspecificaties van de modellen waarop deze verklaring betrekking heeft:
05 Especificaciones de diseño de los modelos a los cuales hace referencia esta declaración:
06 Specifiche di progetto dei modelli cui fa riferimento la presente dichiarazione:
07 Προδιαγραφές Σχεδιασμού των μοντέλων με τα οποία σχετίζεται η δήλωση:
08 Especificações de projecto dos modelos a que se aplica esta declaração:
09 Проектные характеристики моделей, к которым относится настоящее заявление:
10 Typespecifikationer for de modeller, som denne erklæring vedrører:
11 Designspecifikationer för de modeller som denna deklaration gäller:
12 Konstruksjonsspesifikasjoner for de modeller som berøres av denne deklarasjonen:
13 Tätä ilmoitusta koskevien mallien rakennemäärittely:
14 Specifikace designu modelů, ke kterým se vztahuje toto prohlášení:
15 Specifikacije dizajna za modele na koje se ova izjava odnosi:
16 A jelen nyilatkozat tárgyát képező modellek tervezési jellemzői:
17 Specyfikacje konstrukcyjne modeli, których dotyczy deklaracja:
18 Specificaţiile de proiectare ale modelelor la care se referă această declaraţie:
19 Specifikacije tehničnega načrta za modele, na katere se nanaša ta deklaracija:
20 Deklaratsiooni alla kuuluvate mudelite disainispetsifikatsioonid:
21 Проектни спецификации на моделите, за които се отнася декларацията:
22 Konstrukcinės specifikacijos modelių, kurie susiję su šia deklaracija:
23 To modeļu dizaina specifikācijas, uz kurām attiecas šī deklarācija:
24 Konštrukčné špecifikácie modelu, ktorého sa týka toto vyhlásenie:
25 Bu bildirinin ilgili olduğu modellerin Tasarım Özellikleri:

01 • Maximum allowable pressure (PS): **<K>** (bar)
• Minimum/maximum allowable temperature (TS*):
* TSmin: Minimum temperature at low pressure side: **<L>** (°C)
* TSmax: Saturated temperature corresponding with the maximum allowable pressure (PS): **<M>** (°C)
• Refrigerant: **<N>**
• Setting of pressure safety device: **<P>** (bar)
• Manufacturing number and manufacturing year: refer to model nameplate

02 • Maximal zulässiger Druck (PS): **<K>** (Bar)
• Minimal/maximal zulässige Temperatur (TS*):
* TSmin: Mindesttemperatur auf der Niederdruckseite: **<L>** (°C)
* TSmax: Sättigungstemperatur die dem maximal zulässigen Druck (PS) entspricht: **<M>** (°C)
• Kältemittel: **<N>**
• Einstellung der Druck-Schutzvorrichtung: **<P>** (Bar)
• Herstellungsnummer und Herstellungsjahr: siehe Typenschild des Modells

03 • Pression maximale admise (PS): **<K>** (bar)
• Température minimum/maximum admise (TS*):
* TSmin: température minimum côté basse pression: **<L>** (°C)
* TSmax: température saturée correspondant à la pression maximale admise (PS): **<M>** (°C)
• Réfrigérant: **<N>**
• Réglage du dispositif de sécurité de pression: **<P>** (bar)
• Numéro de fabrication et année de fabrication: se reporter à la plaquette signalétique du modèle

04 • Maximaal toelaatbare druk (PS): **<K>** (bar)
• Minimaal/maximaal toelaatbare temperatuur (TS*):
* TSmin: Minimumtemperatuur aan lagedrukzijde: **<L>** (°C)
* TSmax: Verzadigde temperatuur die overeenstemt met de maximaal toelaatbare druk (PS): **<M>** (°C)
• Koelmiddel: **<N>**
• Instelling van drukbeveiliging: **<P>** (bar)
• Fabricagenummer en fabricagejaar: zie naamplaat model

05 • Presión máxima admisible (PS): **<K>** (bar)
• Temperatura mínima/máxima admisible (TS*):
* TSmin: Temperatura mínima en el lado de baja presión: **<L>** (°C)
* TSmax: Temperatura saturada correspondiente a la presión máxima admisible (PS): **<M>** (°C)
• Refrigerante: **<N>**
• Ajuste del presostato de seguridad: **<P>** (bar)
• Número de fabricación y año de fabricación: consulte la placa de especificaciones técnicas del modelo

06 • Pressione massima consentita (PS): **<K>** (bar)
• Temperatura minima/massima consentita (TS*):
* TSmin: temperatura minima nel lato di bassa pressione: **<L>** (°C)
* TSmax: temperatura satura corrispondente alla pressione massima consentita (PS): **<M>** (°C)
• Refrigerante: **<N>**
• Impostazione del dispositivo di controllo della pressione: **<P>** (bar)
• Numero di serie e anno di produzione: fare riferimento alla targhetta del modello

07 • Μέγιστη επιτρεπόμενη πίεση (PS): **<K>** (bar)
• Ελάχιστη/μέγιστη επιτρεπόμενη θερμοκρασία (TS*):
* TSmin: Ελάχιστη θερμοκρασία για την πλευρά χαμηλής πίεσης: **<L>** (°C)
* TSmax: Κορεσμένη θερμοκρασία που αντιστοιχεί με τη μέγιστη επιτρεπόμενη πίεση (PS): **<M>** (°C)
• Ψυκτικό: **<N>**
• Ρύθμιση της διάταξης ασφάλειας πίεσης: **<P>** (bar)
• Αριθμός κατασκευής και έτος κατασκευής: ανατρέξτε στην πινακίδα αναγνώρισης του μοντέλου

08 • Pressão máxima permitida (PS): **<K>** (bar)
• Temperaturas mínima e máxima permitidas (TS*):
* TSmin: Temperatura mínima em baixa pressão: **<L>** (°C)
* TSmax: Temperatura de saturação correspondente à pressão máxima permitida (PS): **<M>** (°C)
• Refrigerante: **<N>**
• Regulação do dispositivo de segurança da pressão: **<P>** (bar)
• Número e ano de fabrico: consultar a placa de especificações da unidade

09 • Максимально допустимое давление (PS): **<K>** (бар)
• Минимально/Максимально допустимая температура (TS*):
* TSmin: Минимальная температура на стороне низкого давления: **<L>** (°C)
* TSmax: Температура кипения, соответствующая максимально допустимому давлению (PS): **<M>** (°C)
• Хладагент: **<N>**
• Настройка устройства защиты по давлению: **<P>** (бар)
• Заводской номер и год изготовления: смотрите паспортную табличку модели

10 • Maks. tilladt tryk (PS): **<K>** (bar)
• Min./maks. tilladte temperatur (TS*):
* TSmin: Min. temperatur på lavtrykssiden: **<L>** (°C)
* TSmax: Mættet temperatur svarende til maks. tilladte tryk (PS): **<M>** (°C)
• Kølemiddel: **<N>**
• Indstilling af tryksikringsudstyr: **<P>** (bar)
• Produktionsnummer og fremstillingsår: se modellens fabriksskilt

11 • Maximalt tillåtet tryck (PS): **<K>** (bar)
• Min/max tillåten temperatur (TS*):
* TSmin: Minimumtemperatur på lågtrycksidan: **<L>** (°C)
* TSmax: Mättnadstemperatur som motsvarar maximalt tillåtet tryck (PS): **<M>** (°C)
• Köldmedel: **<N>**
• Inställning för trycksäkerhetsenhet: **<P>** (bar)
• Tillverkningsnummer och tillverkningsår: se modellens namnplåt

12 • Maksimalt tillatt trykk (PS): **<K>** (bar)
• Minimalt/maksimalt tillatt temperatur (TS*):
* TSmin: Minimumstemperatur på lavtrykssiden: **<L>** (°C)
* TSmax: Metningstemperatur i samsvar med maksimalt tillatt trykk (PS): **<M>** (°C)
• Kjølemedium: **<N>**
• Innstilling av sikkerhetsanordning for trykk: **<P>** (bar)
• Produksjonsnummer og produksjonsår: se modellens merkeplate

13 • Suurin sallittu paine (PS): **<K>** (bar)
• Pienin/suurin sallittu lämpötila (TS*):
* TSmin: Alhaisin matalapainepuolen lämpötila: **<L>** (°C)
* TSmax: Suurinta sallittua painetta (PS) vastaava kyllästyslämpötila: **<M>** (°C)
• Kylmäaine: **<N>**
• Varmuuspainelaitteen asetus: **<P>** (bar)
• Valmistusnumero ja valmistusvuosi: katso mallin nimikilpi

14 • Maximální přípustný tlak (PS): **<K>** (bar)
• Minimální/maximální přípustná teplota (TS*):
* TSmin: Minimální teplota na nízkotlaké straně: **<L>** (°C)
* TSmax: Saturovaná teplota odpovídající maximálnímu přípustnému tlaku (PS): **<M>** (°C)
• Chladivo: **<N>**
• Nastavení bezpečnostního tlakového zařízení: **<P>** (bar)
• Výrobní číslo a rok výroby: viz typový štítek modelu

15 • Najveći dopušten tlak (PS): **<K>** (bar)
• Najniža/najviša dopuštena temperatura (TS*):
* TSmin: Najniža temperatura u području niskog tlaka: **<L>** (°C)
* TSmax: Standardna temperatura koja odgovara najvećem dopuštenom tlaku (PS): **<M>** (°C)
• Rashladno sredstvo: **<N>**
• Postavke sigumosne naprave za tlak: **<P>** (bar)
• Proizvodni broj i godina proizvodnje: pogledajte natpisnu pločicu modela

16 • Legnagyobb megengedhető nyomás (PS): **<K>** (bar)
• Legkisebb/legnagyobb megengedhető hőmérséklet (TS*):
* TSmin: Legkisebb megengedhető hőmérséklet a kis nyomású oldalon: **<L>** (°C)
* TSmax: A legnagyobb megengedhető nyomásnak (PS) megfelelő telítettségi hőmérséklet: **<M>** (°C)
• Hűtőközeg: **<N>**
• A túlnyomás-kapcsoló beállítása: **<P>** (bar)
• Gyártási szám és gyártási év: lásd a berendezés adattábláján

17 • Maksymalne dopuszczalne ciśnienie (PS): **<K>** (bar)
• Minimalna/maksymalna dopuszczalna temperatura (TS*):
* TSmin: Minimalna temperatura po stronie niskociśnieniowej: **<L>** (°C)
* TSmax: Temperatura nasycenia odpowiadająca maksymalnemu dopuszczalnemu ciśnieniu (PS): **<M>** (°C)
• Czynnik chłodniczy: **<N>**
• Nastawa ciśnieniowego urządzenia bezpieczeństwa: **<P>** (bar)
• Numer fabryczny oraz rok produkcji: patrz tabliczka znamionowa modelu

18 • Presiune maximă admisibilă (PS): **<K>** (bar)
• Temperatură minimă/maximă admisibilă (TS*):
* TSmin: Temperatură minimă pe partea de presiune joasă: **<L>** (°C)
* TSmax: Temperatură de saturaţie corespunzând presiunii maxime admisibile (PS): **<M>** (°C)
• Agent frigorific: **<N>**
• Reglarea dispozitivului de siguranţă pentru presiune: **<P>** (bar)
• Numărul de fabricaţie şi anul de fabricaţie: consultaţi placa de identificare a modelului

19 • Maksimalni dovoljeni tlak (PS): **<K>** (bar)
• Minimalna/maksimalna dovoljena temperatura (TS*):
* TSmin: Minimalna temperatura na nizkotlačni strani: **<L>** (°C)
* TSmax: Nasičena temperatura, ki ustreza maksimalnemu dovoljenemu tlaku (PS): **<M>** (°C)
• Hladivo: **<N>**
• Nastavljanje varnostne naprave za tlak: **<P>** (bar)
• Tovarniška številka in leto proizvodnje: glejte napisno ploščico

20 • Maksimaalne lubatud surve (PS): **<K>** (bar)
• Minimaalne/maksimaalne lubatud temperatuur (TS*):
* TSmin: Minimaalne temperatuur madalsurve küljel: **<L>** (°C)
* TSmax: Maksimaalsele lubatud survele (PS) vastav küllastunud temperatuur: **<M>** (°C)
• Jahutusaine: **<N>**
• Surve turvaseadme seadistus: **<P>** (bar)
• Tootmisnumber ja tootmisaasta: vaadake mudeli andmeplaati

21 • Максимално допустимо налягане (PS): **<K>** (bar)
• Минимално/максимално допустима температура (TS*):
* TSmin: Минимална температура от страната на ниското налягане: **<L>** (°C)
* TSmax: Температура на насищане, съответстваща на максимално допустимото налягане (PS): **<M>** (°C)
• Охладител: **<N>**
• Настройка на предпазното устройство за налягане: **<P>** (bar)
• Фабричен номер и година на производство: вижте табелката на модела

22 • Maksimalus leistinas slėgis (PS): **<K>** (bar)
• Minimali/maksimali leistina temperatūra (TS*):
* TSmin: Minimali temperatūra žemo slėgio pusėje: **<L>** (°C)
* TSmax: Prisotinta temperatūra, atitinkamti maksimalų leistiną slėgį (PS): **<M>** (°C)
• Šaldymo skystis: **<N>**
• Apsauginio slėgio prietaiso nustatymas: **<P>** (bar)
• Gaminio numeris ir pagaminimo metai: žiūrėkite modelio pavadinimo plokštelę

23 • Maksimālais pieļaujamais spiediens (PS): **<K>** (bar)
• Minimālā/maksimālā pieļaujamā temperatūra (TS*):
* TSmin: Minimālā temperatūra zemā spiediena pusē: **<L>** (°C)
* TSmax: Piesātinātā temperatūra saskaņā ar maksimālo pieļaujamo spiedienu (PS): **<M>** (°C)
• Dzesinātājs: **<N>**
• Spiediena drošības ierīces iestatīšana: **<P>** (bar)
• Izgatavošanas numurs un izgatavošanas gads: skat. modeļa izgatavotājuzņēmuma plāksnītie

24 • Maximálny povolený tlak (PS): **<K>** (bar)
• Minimálna/maximálna povolená teplota (TS*):
* TSmin: Minimálna teplota na nízkotlakovej strane: **<L>** (°C)
* TSmax: Nasýtená teplota korešpondujúca s maximálnym povoleným tlakom (PS): **<M>** (°C)
• Chladivo: **<N>**
• Nastavenie tlakového poistného zariadenia: **<P>** (bar)
• Výrobné číslo a rok výroby: nájdete na výrobnom štítku modelu

25 • İzin verilen maksimum basınç (PS): **<K>** (bar)
• İzin verilen minimum/maksimum sıcaklık (TS*):
* TSmin: Düşük basınç tarafındaki minimum sıcaklık: **<L>** (°C)
* TSmax: İzin verilen maksimum basınca (PS) karşı gelen doyma sıcaklığı: **<M>** (°C)
• Soğutucu: **<N>**
• Basınç emniyet düzeninin ayarı: **<P>** (bar)
• İmalat numarası ve imalat yılı: modelin ünite plakasına bakın

<K>	PS	**40**	**bar**
<L>	TSmin	**–40**	**°C**
<M>	TSmax	**63**	**°C**
<N>		**R410A**	
<P>		**40**	**bar**

01 Name and address of the Notified body that judged positively on compliance with the Pressure Equipment Directive: **<Q>**
02 Name und Adresse der benannten Stelle, die positiv unter Einhaltung der Druckanlagen-Richtlinie urteilte: **<Q>**
03 Nom et adresse de l'organisme notifié qui a évalué positivement la conformité à la directive sur l'équipement de pression: **<Q>**
04 Naam en adres van de aangemelde instantie die positief geoordeeld heeft over de conformiteit met de Richtlijn Drukapparatuur: **<Q>**
05 Nombre y dirección del Organismo Notificado que juzgó positivamente el cumplimiento con la Directiva en materia de Equipos de Presión: **<Q>**
06 Nome e indirizzo dell'Ente riconosciuto che ha riscontrato la conformità alla Direttiva sulle apparecchiature a pressione: **<Q>**
07 Όνομα και διεύθυνση του Κοινοποιημένου οργανισμού που απεφάνθη θετικά για τη συμμόρφωση προς την Οδηγία Εξοπλισμών υπό Πίεση: **<Q>**
08 Nome e morada do organismo notificado, que avaliou favoravelmente a conformidade com a directiva sobre equipamentos pressurizados: **<Q>**
09 Название и адрес органа технической экспертизы, принявшего положительное решение о соответствии Директиве об оборудовании под давлением: **<Q>**
10 Navn og adresse på bemyndiget organ, der har foretaget en positiv bedømmelse af, at udstyret lever op til kravene i PED (Direktiv for Trykbærende Udstyr): **<Q>**
11 Namn och adress för det anmälda organ som godkänt uppfyllandet av tryckutrustningsdirektivet: **<Q>**
12 Navn på og adresse til det autoriserte organet som positivt bedømte samsvar med direktivet for trykkutstyr (Pressure Equipment Directive): **<Q>**
13 Sen ilmoitetun elimen nimi ja osoite, joka teki myönteisen päätöksen painelaitedirektiivin noudattamisesta: **<Q>**
14 Název a adresa informovaného orgánu, který vydal pozitivní posouzení shody se směrnicí o tlakových zařízeních: **<Q>**
15 Naziv i adresa prijavljenog tijela koje je donijelo pozitivnu prosudbu o usklađenosti sa Smjernicom za tlačnu opremu: **<Q>**
16 A nyomástartó berendezésekre vonatkozó irányelvnek való megfelelőséget igazoló bejelentett szervezet neve és címe: **<Q>**
17 Nazwa i adres Jednostki notyfikowanej, która wydała pozytywną opinię dotyczącą spełnienia wymogów Dyrektywy dot. Urządzeń Ciśnieniowych: **<Q>**
18 Denumirea şi adresa organismului notificat care a apreciat pozitiv conformarea cu Directiva privind echipamentele sub presiune: **<Q>**
19 Ime in naslov organa za ugotavljanje skladnosti, ki je pozitivno ocenil združljivost z Direktivo o tlačni opremi: **<Q>**
20 Teavitatud organi, mis hindas Surveseadmete Direktiiviga ühilduvust positiivselt, nimi ja aadress: **<Q>**
21 Наименование и адрес на упълномощения орган, който се е произнесъл положително относно съвместимостта с Директивата за оборудване под налягане: **<Q>**
22 Atsakingos institucijos, kuri davė teigiamą sprendimą pagal slėginės įrangos direktyvą pavadinimas ir adresas: **<Q>**
23 Sertifikācijas institūcijas, kura ir devusi pozitīvu slēdzienu par atbilstību Spiediena iekārtu Direktīvai, nosaukums un adrese: **<Q>**
24 Názov a adresa certifikačného úradu, ktorý kladne posúdil zhodu so smernicou pre tlakové zariadenia: **<Q>**
25 Basınçlı Teçhizat Direktifine uygunluk hususunda olumlu olarak değerlendirilen Onaylanmış kuruluşun adı ve adresi: **<Q>**

<Q>	**AIB VINÇOTTE INTERNATIONAL N.V.** **Diamant Building, A. Reyerslaan 80** **B-1030 Brussels, Belgium**

2P399209-1

DAIKIN

Jean-Pierre Beuselinck
Director
Ostend, 1st of April 2015

DAIKIN EUROPE N.V.
Zandvoordestraat 300, B-8400 Oostende, Belgium

Installation manual

Contents

Page

Installation manual 1
1. Definitions 1
1.1. Meaning of warnings and symbols 1
1.2. Meaning of used terms 2
2. General safety precautions 2
3. Introduction 4
3.1. General information 4
3.2. Standard operation range 4
3.3. Technical and electrical specifications 4
3.4. Model identification 4
3.5. Combination and options 5
3.6. Scope of the manual 5
4. Accessories 5
5. Overview of unit 6
5.1. Opening the unit 6
5.2. Main components in the unit 6
6. Selecting an installation location 7
7. Dimensions and service space 8
7.1. Dimensions of the unit 8
7.2. Service space 9
8. Inspecting, handling and unpacking the unit 9
8.1. Inspecting 9
8.2. Handling 9
8.3. Unpacking 9
8.4. Installing the unit 9
9. Refrigerant pipe size and allowable pipe length 10
9.1. General information 10
9.2. Selection of piping material 10
9.3. Selection of piping size 10
9.4. Selection of refrigerant branch kits 11
9.5. System piping (length) limitations 12
9.6. System containing VRV DX indoor units 13
9.7. Multi outdoor unit system piping installation 14
10. Precautions on refrigerant piping 15
10.1. Caution for brazing 15
10.2. Connecting the refrigerant piping 15
10.3. Guidelines for handling stop valve 17
10.4. Leak test and vacuum drying 18
11. Pipe insulation 19
12. Water piping work 19
13. Handling of the brazed plate heat exchanger 20
13.1. When designing the equipment 20
13.2. Before operation or starting a test run 21
13.3. Daily service and maintenance 21
13.4. Water quality 21
13.5. Maintenance of plate heat exchanger 22
14. Electrical wiring work 22
14.1. Precautions on electrical wiring work 22
14.2. Internal wiring – Parts table 23
14.3. System overview of field wiring 24
14.4. Opening and closing the electrical component box 24
14.5. Requirements 24
14.6. Routing and connection of power supply wiring and transmission wiring 25
15. Making field settings 28
15.1. Accessing the push buttons on the logic board 28
15.2. Operating the push buttons and DIP switches on the logic board 29
16. Charging refrigerant 31
16.1. Precautions 31
16.2. Important information regarding the refrigerant used 31
16.3. Calculating the additional refrigerant charge 31
16.4. Method for adding refrigerant 32
17. Start-up and configuration 33
17.1. Checks before initial start up 33
17.2. Monitoring function and field settings 33
17.3. Mode 2 34
17.4. Energy saving and optimum operation 37
18. Test operation 40
18.1. Test operation 40
18.2. Malfunction code list 41
18.3. Check of normal operation 42
19. Caution for refrigerant leaks 42
19.1. Introduction 42
19.2. Maximum concentration level 42
19.3. Procedure for checking maximum concentration 42
20. Maintenance and service 43
20.1. Maintenance introduction 43
20.2. Service precautions 43
20.3. Service mode operation 43
21. Disposal requirements 43
22. Unit specification 43
22.1. General technical specifications 43
22.2. Electrical specifications 44

Thank you for purchasing this Daikin VRV IV system.

The original instructions are written in English. All other languages are translations of the original instructions.

CAREFULLY READ THESE INSTRUCTIONS BEFORE INSTALLATION. THEY WILL TELL YOU HOW TO INSTALL AND HOW TO CONFIGURE THE UNIT PROPERLY. KEEP THIS MANUAL IN A HANDY PLACE FOR FUTURE REFERENCE.

1. Definitions

1.1. Meaning of warnings and symbols

Warnings in this manual are classified according to their severity and probability of occurrence.

DANGER

Indicates an imminently hazardous situation which, if not avoided, will result in death or serious injury.

WARNING

Indicates a potentially hazardous situation which, if not avoided, could result in death or serious injury.

CAUTION

Indicates a potentially hazardous situation which, if not avoided, may result in minor or moderate injury. It may also be used to alert against unsafe practices.

NOTICE

Indicates situations that may result in equipment or property-damage accidents only.

INFORMATION

This symbol identifies useful tips or additional information.

Some types of danger are represented by special symbols:

Electric current.

Danger of burning and scalding.

1.2. Meaning of used terms

Installation manual:

Instruction manual specified for a certain product or application, explaining how to install, configure and maintain it.

Operation manual:

Instruction manual specified for a certain product or application, explaining how to operate it.

Maintenance instructions:

Instruction manual specified for a certain product or application, which explains (if relevant) how to install, configure, operate and/or maintain the product or application.

Dealer:

Sales distributor for products as per the subject of this manual.

Installer:

Technical skilled person who is qualified to install products as per the subject of this manual.

User:

Person who is owner of the product and/or operates the product.

Service company:

Qualified company which can perform or coordinate the required service to the unit.

Applicable legislation:

All international, European, national and local directives, laws, regulations and/or codes which are relevant and applicable for a certain product or domain.

Accessories:

Equipment which is delivered with the unit and which needs to be installed according to instructions in the documentation.

Optional equipment:

Equipment which can optionally be combined to the products as per the subject of this manual.

Field supply:

Equipment which needs to be installed according to instructions in this manual, but which are not supplied by Daikin.

2. General safety precautions

The precautions listed here are divided into the following four types. They all cover very important topics, so be sure to follow them carefully.

DANGER: ELECTRICAL SHOCK

Switch off all power supply before removing the electrical component box service panel or before making any connections or touching electrical parts.

Do not touch any switch with wet fingers. Touching a switch with wet fingers can cause electrical shock. Before touching electrical parts, turn off all applicable power supply.

To avoid electric shock, be sure to disconnect the power supply 1 minute or more before servicing the electrical parts. Even after 1 minute, always measure the voltage at the terminals of the main terminal, main circuit capacitors or electrical parts and, before touching, be sure that those voltages are 50 V DC or less.

When service panels are removed, live parts can easily be touched by accident. Never leave the unit unattended during installation or servicing when the service panel is removed.

DANGER: DO NOT TOUCH PIPING AND INTERNAL PARTS

Do not touch the refrigerant piping, water piping or internal parts during and immediately after operation. The piping and internal parts may be hot or cold depending on the working condition of the unit.

Your hand may suffer burns or frostbite if you touch the piping or internal parts. To avoid injury, give the piping and internal parts time to return to normal temperature or, if you must touch them, be sure to wear protective gloves.

Also, at least, following information shall be provided at an accessible place of the system:

- Instructions for shutting down the system in case of an emergency.
- Name and address of fire department, police and hospital.
- Name, address and day and night telephone numbers for obtaining service.

In Europe, EN 378 provides the necessary guidance for this logbook.

WARNING

- Ask your dealer or qualified personnel to carry out installation work.
  Do not attempt to install the air conditioner yourself. Improper installation may result in water leakage, electric shocks or fire.
- Install the air conditioner in accordance with the instructions in this installation manual.
  Improper installation may result in water or refrigerant leakage, electric shocks or fire.
- When installing the unit in a small room, take measures against to keep refrigerant concentration from exceeding allowable safety limits in the event of refrigerant leakage.
  Contact the place of purchase for more information. Excessive refrigerant in a closed ambient can lead to oxygen deficiency.
- Be sure to use only the specified accessories and parts for installation work.
  Failure to use the specified parts may result in the unit falling, water leakage, electric shocks or fire.

WARNING

- Install the air conditioner on a foundation strong enough to withstand the weight of the unit.
  A foundation of insufficient strength may result in the equipment falling and causing injury.
- Carry out the specified installation work after taking into account strong winds, typhoons or earthquakes.
  Failure to do so during installation work may result in the unit falling and causing accidents.
- Make sure that a separate power supply circuit is provided for this unit and that all electrical work is carried out by qualified personnel according to local laws and regulations and this installation manual.
  An insufficient power supply capacity or improper electrical construction may lead to electric shocks or fire.
- Make sure that all wiring is secured, the specified wires are used, and that there is no strain on the terminal connections or wires.
  Improper connections or securing of wires may result in abnormal heat buildup or fire.
- When wiring the power supply and connecting the remote controller wiring and transmission wiring, position the wires so that the control box lid can be securely fastened.
  Improper positioning of the control box lid may result in electric shocks, fire or the terminals overheating.
- If refrigerant gas leaks during installation, ventilate the area immediately.
  Toxic gas may be produced if the refrigerant gas comes into contact with fire.
- After completing installation, check for refrigerant gas leakage.
  Toxic gas may be produced if the refrigerant gas leaks into the room and comes into contact with a source of fire, such as a fan heater, stove or cooker.
- Be sure to switch off the unit before touching any electrical parts.
- Do not directly touch refrigerant that has leaked from refrigerant pipes or other areas, as there is a danger of frostbite.
- Do not allow children to climb on the outdoor unit and avoid placing objects on the unit.
  Injury may result if the unit becomes loose and falls.
- Be sure to earth the air conditioner.
  Do not earth the unit to a utility pipe, lightning conductor or telephone earth lead. Imperfect earthing may result in electric shocks or fire.
  A high surge current from lightning or other sources may cause damage to the air conditioner.
- Be sure to install an earth leakage breaker.
  Failure to install an earth leakage breaker may result in electric shocks or fire.

CAUTION

- While following the instructions in this installation manual, install drain piping to ensure proper drainage and insulate piping to prevent condensation.
  Improper drain piping may result in indoor water leakage and property damage.
- Install the indoor and outdoor units, power cord and connecting wires at least 1 meter away from televisions or radios to prevent picture interference and noise.
  (Depending on the incoming signal strength, a distance of 1 meter may not be sufficient to eliminate noise.)
- Remote controller (wireless kit) transmitting distance can be shorter than expected in rooms with electronic fluorescent lamps (inverter or rapid start types).
  Install the indoor unit as far away from fluorescent lamps as possible.
- Make sure to provide for adequate measures in order to prevent small animals from using the outdoor unit as a shelter.
  Small animals making contact with electrical parts can cause malfunctions, smoke or fire. Please instruct the customer to keep the area around the unit clean.
- Install in a machine room that is free of moisture.
  The unit is designed for indoor use.
- Do not install the air conditioner in the following locations:
  - Where there is a high concentration of mineral oil spray or vapour (e.g. a kitchen).
    Plastic parts will deteriorate, parts may fall off and water leakage could result.
  - Where corrosive gas, such as sulphurous acid gas, is produced.
    Corroding of copper pipes or soldered parts may result in refrigerant leakage.
  - Near machinery emitting electromagnetic radiation.
    Electromagnetic radiation may disturb the operation of the control system and result in a malfunction of the unit.
  - Where flammable gas may leak, where there is carbon fibre or ignitable dust suspensions in the air, or where volatile flammables such as paint thinner or gasoline are handled.
    Operating the unit in such conditions may result in fire.
- The air conditioner is not intended for use in a potentially explosive atmosphere.

CAUTION

The indoor unit is designed for R410A use. See the catalogue for indoor unit models that can be connected. (Normal operation is not possible when connecting units that are originally designed for other refrigerants.)

3. Introduction

3.1. General information

This installation manual concerns VRV inverters of the Daikin RWEYQ-T series. These units are designed for indoor installation and used for cooling, heat pump and heat recovery applications.

The RWEYQ-T units can be combined with Daikin VRV series indoor units for air conditioning purposes. The present installation manual describes the procedures for unpacking, installing and connecting the RWEYQ-T units. Installation of the indoor units is not described in this manual. Always refer to the installation manual supplied with these units for their installation.

These units have (in single use) heating capacities ranging from 25 to 31.5 kW and cooling capacities ranging from 22.4 to 28 kW. In multi outdoor unit combinations, the heating capacity can go up to 94.5 kW and in cooling up to 84 kW.

3.2. Standard operation range

Use the system within the following temperature and humidity ranges for safe and effective operation.

Ambient temperature around the VRV IV water-cooled unit	0~40°C[(a)]	
Indoor temperature	21~32°C DB 14~25°C WB	15~27°C DB
Indoor humidity	≤80%[(b)]	
Water temperature at the water inlet of the VRV IV water-cooled unit	10°C~45°C[(c)]	
Water flow rate	50~150 l/min[(d)]	

(a) Heat release from the unit: 0.71 kW/10 Hp/hour
(b) To avoid condensation and water dripping out of the unit.
If the temperature or the humidity is beyond these conditions, safety devices may be put in action and the air conditioner may not operate.
(c) The lower limit is extendable till –10°C (heating operation mode) in case the brine type setting is activated. (See "Brine type setting" on page 36)
(d) Water flow rate is indicated for 1 outdoor unit (not for several as in multi outdoor unit combination)

Above operation range is only valid in case direct expansion indoor units are connected to the VRV IV system.

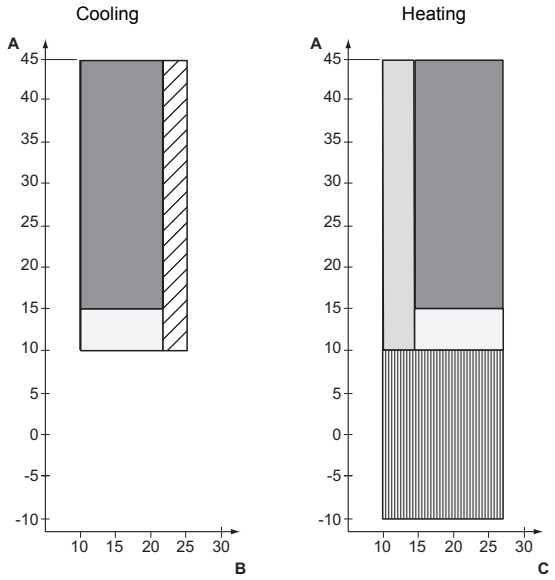

A Inlet water temperature (°C)
B Indoor temperature (°C WB)
C Indoor temperature (°C DB)
Range for continuous operation
Range for operation
Range for pull down operation
Range for warming up operation
Only when brine type setting is activated

INFORMATION

The unit is designed for the following operation range:
Water temperature: 20~35°C
Water volume: ≥60 l/minute

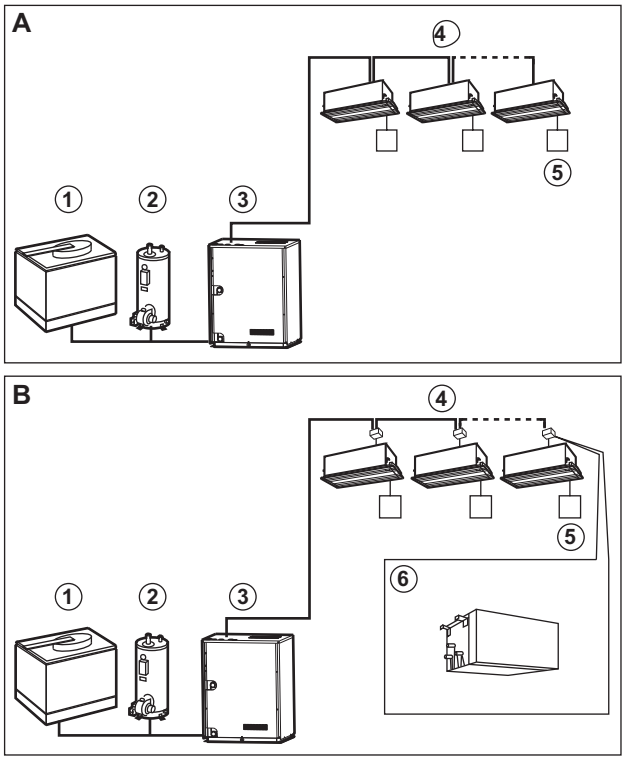

A Heat pump system:
Heating or cooling mode is possible.
B Heat recovery system:
Heating, cooling or simultaneous heating/cooling is possible.
1 Closed cooling tower
2 Boiler
3 VRV IV water-cooled unit
4 VRV DX indoor unit
5 User interface:
Dedicated depending on indoor unit type.
6 BS box:
Required in each indoor unit if user selectable operation mode is required.

3.3. Technical and electrical specifications

Refer to the Engineering Data Book for the complete list of specifications.

3.4. Model identification

Model name: RW E Y Q 10 T8 Y1 B

Code	Description RW E Y Q 10 T8 Y1 B
RW	Water-cooled split (outdoor) unit
E	Heat pump system
Y	Heat recovery system
Q	Refrigerant R410A
10	Capacity index
T8	VRV IV series
Y1	Power supply: 3N~, 380~415 V, 50 Hz
B	European Market

3.5. Combination and options

The indoor units can be installed in the following range.

- Always use appropriate indoor units compatible with R410A.
  To learn which models of indoor units are compatible with R410A, refer to the product catalogues.
- Indoor unit capacity range
  The total capacity of indoor units needs to be within the specified range. Connection ratio (CR): 50%≤CR≤130%

Outdoor unit	50% minimum CR	100% nominal CR	130% maximum CR
RWEYQ8	100	200	260
RWEYQ10	125	250	325
RWEYQ16	200	400	520
RWEYQ18	225	450	585
RWEYQ20	250	500	650
RWEYQ24	300	600	780
RWEYQ26	325	650	845
RWEYQ28	350	700	910
RWEYQ30	375	750	975

- Standard combinations for multi outdoor unit modules are as indicated in table below.

	8 Hp	10 Hp
RWEYQ16	2	0
RWEYQ18	1	1
RWEYQ20	0	2
RWEYQ24	3	0
RWEYQ26	2	1
RWEYQ28	1	2
RWEYQ30	0	3

3.5.1 Options

To install the above outdoor units, the following optional parts are also required.

Refrigerant branching kit

Always use an appropriate kit dedicated for your system.

Heat pump system (2-pipe system)

Refnet header	Refnet joint
KHRQ22M29H	KHRQ22M20TA
KHRQ22M29H	KHRQ22M29T9
KHRQ22M64H	KHRQ22M64T
KHRQ22M75H	KHRQ22M75T

Heat recovery system (3-pipe system)

Refnet header	Refnet joint
—	KHRQ23M20T
KHRQ23M29H	KHRQ23M29T9
KHRQ23M64H	KHRQ23M64T
KHRQ23M75H	KHRQ23M75T

Multi outdoor unit connection piping kit

Always use an appropriate kit dedicated for your system.

Number of outdoor units	Multi outdoor unit connection kit 2	Multi outdoor unit connection kit 3
Heat pump system	BHFQ22P1007	BHFQ22P1517
Heat recovery system	BHFQ23P907	BHFQ23P1357

In case the insulation material of the multi outdoor unit piping kit has to comply with higher fire resistance specifications. Following kits can be used:

	EKBHFQ1	EKBHFQ2
BHFQ22P1007	1	0
BHFQ23P907	2	1
BHFQ22P1517	2	2
BHFQ23P1357	4	0

3.5.2 Other options

- KRC19-26A: Cool/heat selector (switch)
- KJB111A: Cool/heat selector (fixing box)
- DTA104A62: External control adapter for the outdoor unit
  To instruct specific operation with an external input coming from a central control, the external control adapter can be used. Instructions (group or individual) can be instructed for power consumption limitation.

NOTICE

Refer to the manuals of these kits for more information.

3.6. Scope of the manual

This manual describes the procedures for handling, installing and connecting the VRV IV water-cooled units. This manual has been prepared to ensure adequate maintenance of the unit, and it will provide help in case problems occur.

INFORMATION

The installation of the indoor unit(s) is described in the indoor unit installation manual provided with the indoor units.

4. Accessories

Make sure that the following accessories are included. Check by removing the front panel.

NOTICE

Accessory pipes 1 and 3 are not used for the heat pump system.

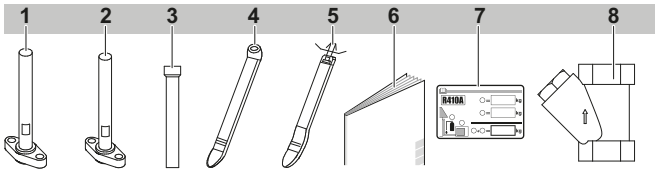

Accessories located at the bottom of the indoor unit

1 Accessory pipe (thin marking) (2)
2 Accessory pipe (thick marking) (2)
3 Accessory pipe (2)
4 Clamps (1)
5 Clamps (1)
6 Installation and operation manual (1)
7 Refrigerant charge label f-gas (1)
8 Water filter (3)

See the figure in "5.1. Opening the unit" on page 6 for the location of the accessories.

The accessories are located behind the front plate, as shown in the following figure.

5. Overview of unit

5.1. Opening the unit

To gain access to the unit, the front plate needs to be opened as follows:

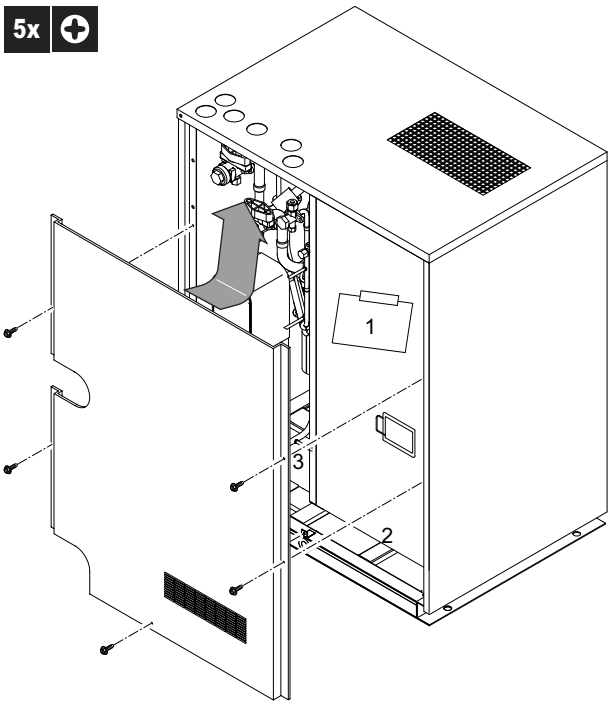

1 Location of manual
2 Location of accessory pipes
3 Location of water filter

Once the front plate is open, the electrical component box can be accessed by removing the electrical component box cover as follows.

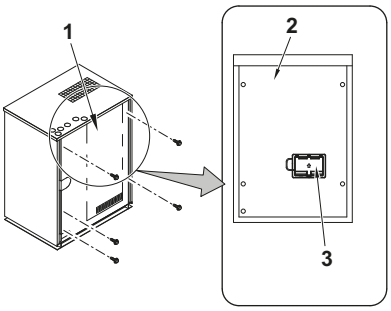

1 Electrical component box
2 Cover of electrical component box
3 Inspection cover

DANGER: Electrical shock

See "2. General safety precautions" on page 2.

DANGER: Do not touch piping and internal parts.

See "2. General safety precautions" on page 2.

5.2. Main components in the unit

For all the models a piping diagram and outlook drawing are available. Depending on the model type some components in the main component list may not be existing in the unit.

Main components: see figure 1, figure 2, and figure 3

1 Compressor (INV)
2 Plate heat exchanger
3 Receiver
4 Oil separator
5 Electronic expansion valve (main) (Y1E)
6 Electronic expansion valve (sub cool) (Y3E)
7 Solenoid valve (4-way valve) (main) (Y5S)
8 Solenoid valve (4-way valve) (sub) (Y7S)
9 Solenoid valve (hot gas) (Y1S)
10 Solenoid valve (oil recovery) (Y2S)
11 Solenoid valve (receiver gas intake) (Y3S)
12 Solenoid valve (receiver gas purge) (Y4S)
13 Solenoid valve (liquid pipe) (Y6S)
14 Electrical component box
15 Pressure switch (high) (S1PH)
16 Pressure sensor (high) (S1NPH)
17 Pressure sensor (low) (S1NPL)
18 Service port
19 HP/LP gas stop valve
20 Suction gas stop valve
21 Liquid stop valve

5.2.1 Piping diagram

See figure 3.

5.2.2 Outlook drawing

See figure 1 + figure 2.

5.3. Main components in the electrical component box

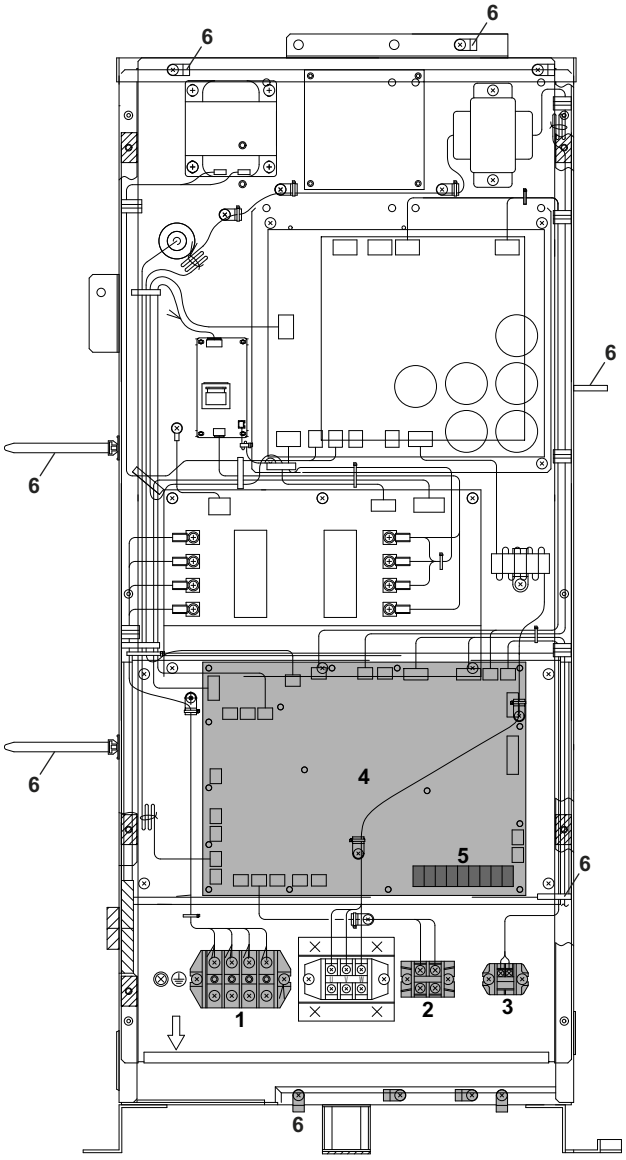

1 X1M: Power supply connection terminal: Main terminal block which allows easy connection of field wiring for power supply.
2 X2M: Pump operation output terminal.
3 X3M: Connection of interlock circuit terminal.
4 A1P Main PCB
5 X1M Terminal on main PCB: Terminal block for transmission wiring.
6 Cable tie mountings: the cable tie mountings allow to fix the field wiring with cable ties to the electrical component box to ensure pull relief.

INFORMATION

For more details refer to the wiring diagram of the units. The wiring diagram is located on the inside of the electrical component box.

6. Selecting an installation location

WARNING

Be sure to provide for adequate measures in order to prevent that the unit be used as a shelter by small animals. Small animals making contact with electrical parts can cause malfunctions, smoke or fire. Please instruct the customer to keep the area around the unit clean and clear.

This is a class A product. In a domestic environment this product may cause radio interference, in which case the user may be required to take adequate measures.

CAUTION

Appliance not accessible to the general public, install it in a secured area, protected from easy access.

This appliance is intended to be used by expert or trained users in shops, in light industry and on farms, or for commercial use by lay persons.

This unit does not have specifications for outdoor installation. The unit must be installed indoors (example: machine room, …) Always install it in a room (machine room, etc.).
Paying attention to the conditions mentioned below, select the place for installation with prior approval of customer.

- The foundation is strong enough to support the weight of the unit and the floor is flat to prevent vibration, noise generation and to have sufficient stability.
- Consider the space required for refrigerant piping work when installing. Refer to "7. Dimensions and service space" on page 8.
- There is no danger of fire due to leakage of inflammable gas.
- The equipment is not intended for use in a potentially explosive atmosphere.
- The piping length between the outdoor unit and the indoor unit may not exceed the allowable piping length. See "9. Refrigerant pipe size and allowable pipe length" on page 10.
- Be sure that sufficient precautions are taken, in accordance with the applicable legislation, in case of refrigerant leakage.
- Take care that in the event of a water leak, water cannot cause any damage to the installation space and surroundings.
- Select the location of the unit in such a way that the sound generated by the unit does not disturb anyone, and the location is selected according the applicable legislation.
- Locations with airflow and ventilation holes capable of dissipating heat from the machine and where the ambient temperature around the outdoor unit is between 0 and 40°C and the humidity does not exceed 80%.

NOTICE

The equipment described in this manual may cause electronic noise generated from radio-frequency energy. The equipment complies to specifications that are designed to provide reasonable protection against such interference. However, there is no guarantee that interference will not occur in a particular installation.

It is therefore recommended to install the equipment and electric wires keeping proper distances away from stereo equipment, personal computers, etc.

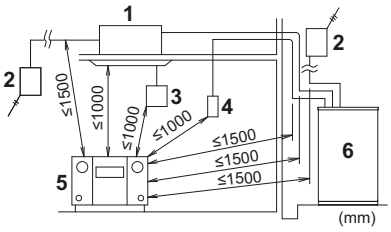

1 Indoor unit
2 Branch switch, overcurrent breaker
3 Remote controller
4 Cool/heat selector
5 Personal computer or radio
6 Outdoor unit

- Water quality
  Water containing high levels of foreign materials may cause corrosion of heat exchanger and piping or scale accumulation. Use water with specifications according to "13.4. Water quality" on page 21.
- Cooling tower
  Use a closed type cooling tower. (Open type tower cannot be used.)
- Filter
  Install the filter at the inlet of the water piping. (If sand, rust particles, or any other contamination is mixed in the water circulation system, damage to the plate heat exchanger may be caused by the corrosion of metal materials and clogging of the heat exchanger.)
- The refrigerant R410A itself is nontoxic, nonflammable and is safe. If the refrigerant should leak however, its concentration may exceed the allowable limit depending on room size. Due to this it could be necessary to take measures against leakage. Refer to "19. Caution for refrigerant leaks" on page 42.

7. Dimensions and service space

7.1. Dimensions of the unit

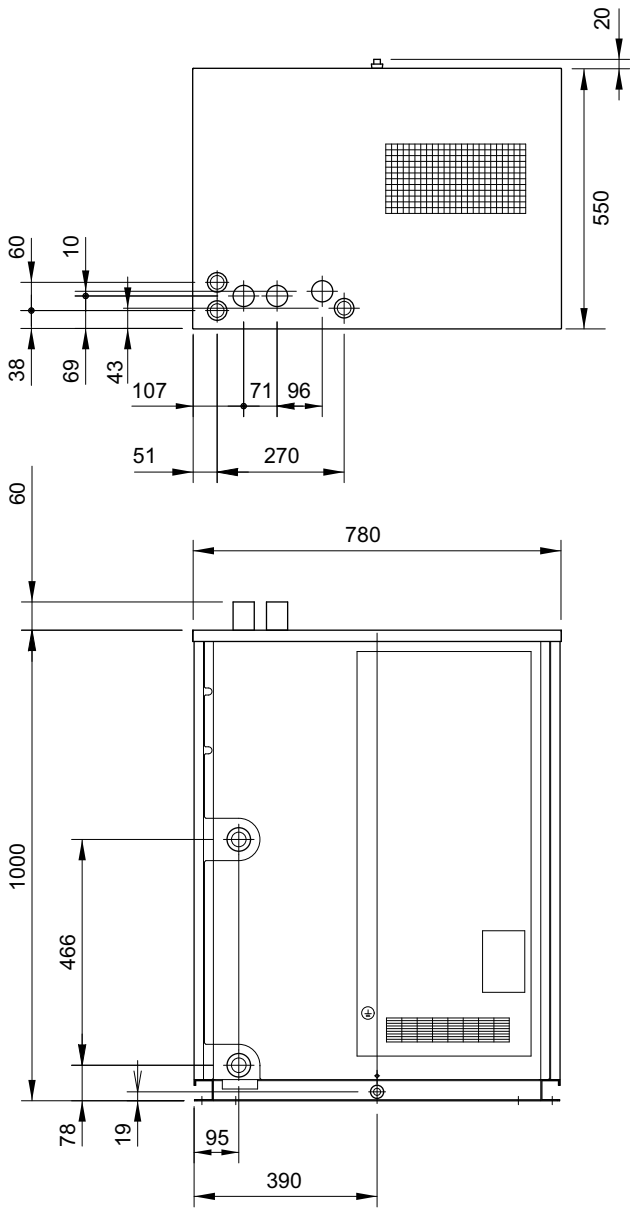

Dimensions are in <mm>

7.2. Service space

When installing, provide the space mentioned below.

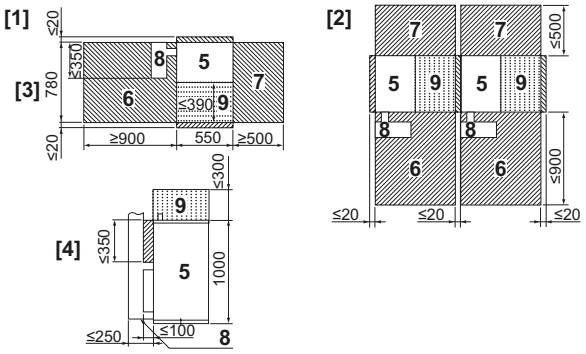

[1] Single outdoor unit installation
[2] Multi outdoor unit installation
[3] Top view
[4] Side view
5 Outdoor unit
6 Service space (front side)
7 Service space (back side)
8 Space for installing water piping
Secure enough space for removing the front panel.
9 Ventilation space above the area (⋮⋮⋮⋮⋮) of the outdoor unit.

Distances are in <mm>

NOTICE

Secure spaces in the front, back and top sides in the same way as in a single installation.

8. Inspecting, handling and unpacking the unit

8.1. Inspecting

At delivery, the package should be checked and any damage should be reported immediately to the carrier claims agent.

8.2. Handling

When handling the unit, take into account the following:

1. Fragile, handle the unit with care.
   Keep the unit upright in order to avoid compressor damage.
2. Choose the path along which the unit is to be brought in ahead of time.
3. In order to prevent any damage to the unit during installation, use slings (cloth) or patch plates and lift the unit.
4. Lift the unit preferably with a crane and 2 belts of at least 4 m long.
5. Use patch plates or clothes where the belt may hit the casing in order to prevent the casing from being damaged.
6. Be sure to use the standard supplied accessories and dedicated parts as installation parts.

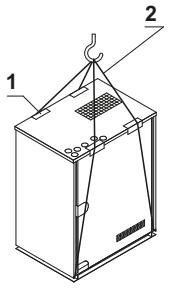

1 Patch plates or clothes
2 Belt sling

NOTICE

Use a belt sling with a width of 20 mm or less that can support the weight of the product.

8.3. Unpacking

Remove the packaging material from the unit:

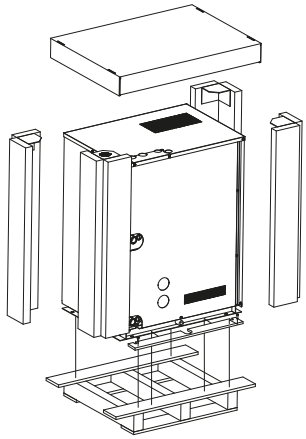

Take care not to damage the unit when removing the shrink foil with a cutter.

WARNING

Tear apart and throw away plastic packaging bags so that children will not play with them. Children playing with plastic bags face the danger of death by suffocation.

1 Remove the 4 bolts fixing the unit to its pallet.

2 Make sure that all the accessories as mentioned on page 5 are available in the unit.

8.4. Installing the unit

- Make sure the area around the machine drains properly by setting up drainage grooves around the foundation or connect drainage equipment.
- Make sure the unit is installed level on a sufficiently strong base to prevent vibration and noise.
- Secure the unit to its base using foundation bolts. (Use four commercially available M12-type foundation bolts, nuts, and washers.)
- The foundation bolts should be inserted 20 mm.

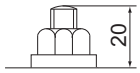

- Fix 4 foundation bolts.
- Support the unit with a foundation that is larger than the hatched area.

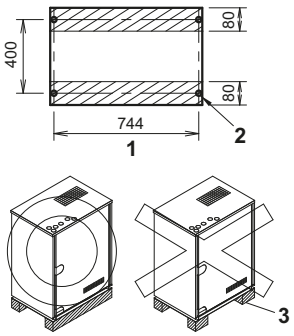

1 Front side
2 Hole for a foundation bolt (Ø17 holes at 4 corners)
3 Avoid foundations that support the unit at 4 corner points.

9. Refrigerant pipe size and allowable pipe length

9.1. General information

NOTICE

The refrigerant R410A requires strict cautions for keeping the system clean, dry and tight.

- Clean and dry: foreign materials (including mineral oils or moisture) should be prevented from getting mixed into the system.
- Tight: R410A does not contain any chlorine, does not destroy the ozone layer, and does not reduce earth's protection against harmful ultraviolet radiation. R410A can contribute slightly to the greenhouse effect if it is released. Therefore we should take special attention to check the tightness of the installation.

9.2. Selection of piping material

NOTICE

Piping and other pressure containing parts shall comply with the applicable legislation and shall be suitable for refrigerant. Use phosphoric acid deoxidised seamless copper for refrigerant.

NOTICE

Installation shall be done by a licensed installer, the choice of materials and installation shall conform completely with the applicable national and international codes.

In Europe, EN 378 is the applicable standard that shall be used.

- Foreign materials inside pipes (including oils for fabrication) must be ≤30 mg/10 m.
- Temper grade: use piping with temper grade in function of the pipe diameter as listed in table below.

Pipe Ø (mm)	Temper grade of piping material
≤15.9	O (annealed)
≥19.1	1/2H (half hard)

9.3. Selection of piping size

Determine the proper size referring to following tables and reference figure (only for indication).

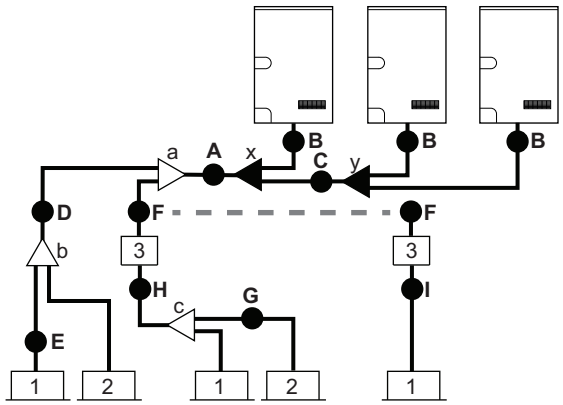

1,2 VRV DX indoor unit
3 BS unit
a,b,c Indoor branch kit
x,y Multi outdoor unit connection kit

INFORMATION

- In case of heat recovery system:
  Use 3 pipes (suction gas, HP/LP gas, liquid).
- In case of heat pump system:
  Use 2 pipes (gas and liquid).
  In case of gas pipe in heat pump system
  Select the piping size in accordance with the suction gas piping size.
  No BS unit can be used in case of heat pump system.

Piping between outdoor unit and (first) refrigerant branch kit: A, B, C

Choose from the following table in accordance with the outdoor unit total capacity type, connected downstream.

Outdoor unit capacity type (HP)	Piping outer diameter size (mm)		
	Suction gas pipe	Liquid pipe	HP/LP gas pipe
8	19.1	9.5	15.9
10	22.2		19.1
16	28.6	12.7	22.2
18+20		15.9	
24	34.9	19.1	28.6
26+30			

Piping between refrigerant branch kits: D
Piping between refrigerant branch kit and BS unit: F
Piping between BS unit and refrigerant branch kit: H

Choose from the following table in accordance with the indoor unit total capacity type, connected downstream. Do not let the connection piping exceed the refrigerant piping size chosen by the general system model name.

Indoor unit capacity index	Piping outer diameter size (mm)		
	Suction gas pipe	Liquid pipe	HP/LP gas pipe
<150	15.9	9.5	12.7
150≤x<200	19.1		15.9
200≤x<290	22.2		19.1
290≤x<420	28.6	12.7	
420≤x<640		15.9	28.6
640≤x<920	34.9	19.1	
≥920	41.3		

In case of heat pump system (or 2 pipe):
For the gas piping size: select the size of suction gas piping.

Example:

Downstream capacity for E=capacity index of unit 1
Downstream capacity for D=capacity index of unit 1+capacity index of unit 2

Piping between BS unit or refrigerant branch kit and indoor unit: E, G, I

Pipe size for direct connection to indoor unit must be the same as the connection size of the indoor unit.

Indoor unit capacity index	Piping outer diameter size (mm)	
	Suction gas pipe	Liquid pipe
15, 20, 25, 32, 40, 50	12.7	6.4
63, 80, 100, 125	15.9	9.5
200	19.1	
250	22.2	

- When the equivalent pipe length between outdoor and indoor units is 80 m or more, the size of the main liquid pipe must be increased. Depending on the length of the piping, the capacity may drop, but even in such a case it is possible to increase the size of the main pipe.

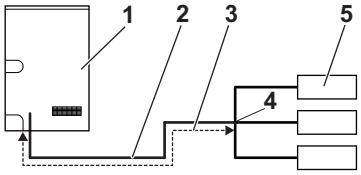

1 Outdoor unit
2 Main pipes
3 Increase only liquid pipe size
4 First refrigerant branch kit
5 Indoor unit

Size up	
HP Class	Liquid size (mm)
8+10	9.5 → 12.7
16	12.7 → 15.9
18+20+24	15.9 → 19.1
26+30	19.1 → 22.2

Never increase suction gas pipe and HP/LP gas pipe.

- The pipe thickness of the refrigerant piping shall comply with the applicable legislation. The minimal pipe thickness for R410A piping must be in accordance with the table below.

Pipe Ø (mm)	Minimal thickness t (mm)
6.4	0.80
9.5	
12.7	
15.9	0.99
19.1	0.80
22.2	
28.6	0.99
34.9	1.21
41.3	1.43

- In case the required pipe sizes (inch sizes) are not available, it is also allowed to use other diameters (mm sizes), taken the following into account:
  - Select the pipe size nearest to the required size.
  - Use the suitable adapters for the change-over from inch to mm pipes (field supply).

  In this case, the additional refrigerant calculation has to be adjusted as mentioned in "16.3. Calculating the additional refrigerant charge" on page 31.

9.4. Selection of refrigerant branch kits

Refrigerant Refnets

For piping example, refer to "9.3. Selection of piping size" on page 10.

- When using Refnet joints at the first branch counted from the outdoor unit side, choose from the following table in accordance with the capacity of the outdoor unit (e.g. Refnet joint a).

Outdoor unit capacity type (HP)	2 pipes	3 pipes
8+10	KHRQ22M29T9	KHRQ23M29T9
16+18+20	KHRQ22M64T	KHRQ23M64T
24+26+30	KHRQ22M75T	KHRQ23M75T

- For Refnet joints other than the first branch (e.g. Refnet joint b), select the proper branch kit model based on the total capacity index of all indoor units connected after the refrigerant branch.

Indoor unit capacity index	2 pipes	3 pipes
<200	KHRQ22M20T	KHRQ23M20T
200≤x<290	KHRQ22M29T9	KHRQ23M29T9
290≤x<640	KHRQ22M64T	KHRQ23M64T
≥640	KHRQ22M75T	KHRQ23M75T

- Concerning Refnet headers, choose from the following table in accordance with the total capacity of all the indoor units connected below the Refnet header.

Indoor unit capacity index	2 pipes	3 pipes
<200	KHRQ22M29H	KHRQ23M29H
200≤x<290	KHRQ22M29H	KHRQ23M29H
290≤x<640	KHRQ22M64H[(a)]	KHRQ23M64H[(a)]
≥640	KHRQ22M75H	KHRQ23M75H

(a) If the pipe size above the Refnet header is Ø34.9 or more, KHRQ22M75H/KHRQ23M75H is required.

INFORMATION

Maximum 8 branches can be connected to a header.

- How to choose a multi outdoor unit connection piping kit (needed if the outdoor unit capacity type is 16 HP or more). Choose from the following table in accordance with the number of outdoor units.

Number of outdoor units	Multi outdoor unit connection kit	
	2	3
Heat pump system	BHFQ22P1007	BHFQ22P1517
Heat recovery system	BHFQ23P907	BHFQ23P1357

NOTICE

Refrigerant branch kits can only be used with R410A.

9.5. System piping (length) limitations

Piping length restrictions

Make sure to perform the piping installation within the range of the maximum allowable pipe length, allowable level difference and allowable length after branching as indicated below.

Definitions

Actual piping length: pipe length between outdoor(1) and indoor units.

Equivalent piping length(2): pipe length between outdoor(1) and indoor units.

Total piping length: total piping length from the outdoor(1) to all indoor units.

Difference in height between outdoor and indoor units: H1

Difference in height between indoor and indoor units: H2

Difference in height between outdoor and outdoor units: H3

(1) If the system capacity is >10HP, re-read "the first outdoor branch as seen from the indoor unit".

(2) Assume equivalent piping length of Refnet joint=0.5 m, Refnet header=1 m, BSVQ100/160=4 m and BSVQ250=6 m (for calculation purposes of equivalent piping length, not for refrigerant charge calculations).

9.6. System containing VRV DX indoor units

System setup

	Branch with Refnet joint	Branch with Refnet joint and Refnet header	Branch with Refnet header
Single outdoor unit system	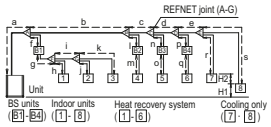 Example 1.1	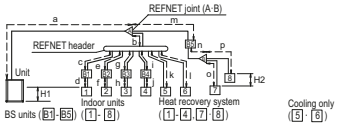 Example 1.2	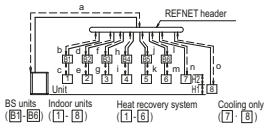 Example 1.3
Multi outdoor unit system 1 Indoor unit A Refnet joint Refnet header ◄ Multi outdoor unit connection piping kit	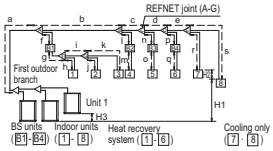 Example 2.1	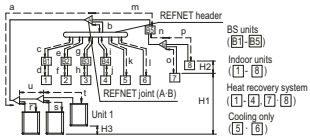 Example 2.2	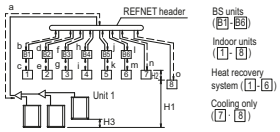 Example 2.3

Example of connection in case of heat recovery system

Connection to BS unit

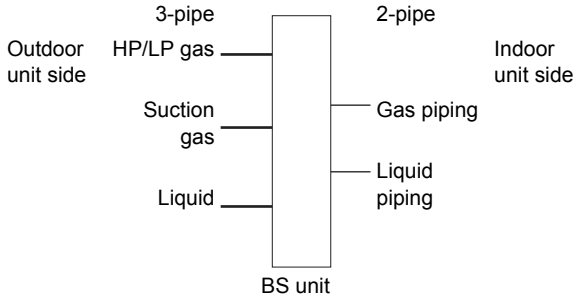

- Piping between outdoor unit and BS unit: thick line (3 pipe)
- Piping between BS unit and indoor unit: thin line (2 pipe)

Example 3: with multi outdoor unit layout

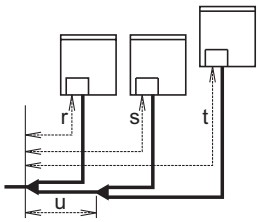

Maximum allowable length

- Between outdoor and indoor units

Actual piping length	**120 m**	Example 1.1 unit 8: a+b+c+d+e+s≤120 m Example 2.1 unit 8: a+b+c+d+e+s≤120 m	Example 1.2 unit 4: a+b+i+j≤120 m unit 5: a+b+k≤120 m unit 8: a+m+n+p≤120 m	Example 1.3 unit 8: a+o≤120 m unit 4: a+h+i≤120 m
Equivalent length[(2)]	**140 m**	—	—	—
Total piping length	**300 m**	Example 1.1 a+b+c+d+e+f+g+h+i+j+k+l+m+n+o+p+q+r+s ≤300 m Example 2.1 a+b+c+d+e+f+g+h+i+j+k+l+m+n+o+p+q+r+s ≤300 m	—	—

- Between outdoor branch and outdoor unit (only in case >10 HP)

Actual piping length	10 m	Example 3 r, s, t≤10 m; u≤5 m
Equivalent length	13 m	—

Maximum allowable height difference

H1	≤50 m (40 m) (if outdoor is located below indoor units)
H2	≤15 m
H3	≤2 m

Maximum allowable length after branch

The pipe length from the first refrigerant branch kit to the indoor unit ≤40 m.

Example 1.1: unit 8: b+c+d+e+s≤40 m

Example 1.2: unit 5: b+k≤40 m, unit 8: m+n+p≤40 m

Example 1.3: unit 8: o≤40 m

However, extension is possible if all below conditions are met. In this case limitation can be extended up to 90 m.

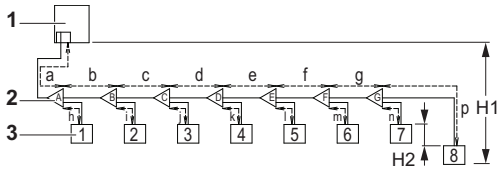

1 Outdoor units
2 Refnet joints (A~G)
3 Indoor unit (1~8)

a. The piping length between all indoor to the nearest branch kit is ≤40 m.
Example: h, i, j … p≤40 m

b. It is necessary to increase the pipe size of the suction gas and liquid piping if the pipe length between the first and the final branch kit is over 40 m.
If the increased pipe size is larger than the pipe size of the main pipe, increase is not allowed, extension till 90 m can not be done.
Increase the pipe size as follows:
9.5 → 12.7; 12.7 → 15.9; 15.9 → 19.1; 19.1 → 22.2; 22.2 → 25.4(1); 28.6 → 31.8(1); 34.9 → 38.1(1)
Example: unit 8: b+c+d+e+f+g+p≤90 m and b+c+d+e+f+g >40 m; increase the pipe size of b, c, d, e, f, g.

c. When the piping size is increased (step b), the piping length has to be counted as double (except for the main pipe and the pipes that are not increased in pipe size).
The total piping length has to be within limitations (see table above).
Example:
a+b*2+c*2+d*2+e*2+f*2+g*2+h+i+j+k+l+m+n+p≤300 m.

d. The piping length difference between the nearest indoor from first branch to the outdoor unit and farthest indoor to the outdoor unit is ≤40 m.
Example: The farthest indoor unit 8. The nearest indoor unit 1 → (a+b+c+d+e+f+g+p)–(a+h)≤40 m.

9.7. Multi outdoor unit system piping installation

9.7.1 Precautions when connecting piping between outdoor units

- To connect the piping between outdoor units, an optional multi outdoor unit connection piping kit BHFQ23P907/1357 or BHFQ22P1007/1517 is always required. When installing the piping, follow the instructions in the installation manual that comes with the kit.
- Only proceed with piping work after considering the limitations on installing listed here and in chapter "10.2. Connecting the refrigerant piping" on page 15, always referring to the installation manual delivered with the kit.

9.7.2 Possible installation patterns and configurations

- The piping between the outdoor units must be routed level or slightly upward to avoid the risk of oil retention into the piping.

Pattern 1 **Pattern 2**

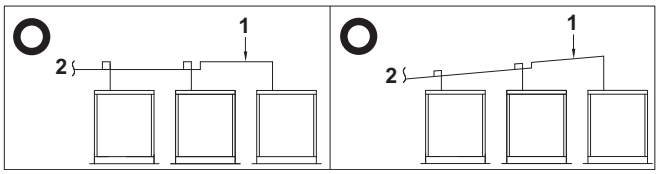

1 Piping between outdoor units
2 To indoor unit

Prohibited patterns: change to pattern 1 or 2.

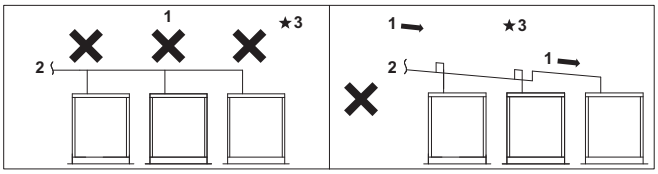

1 Piping between outdoor units
2 To indoor unit
3 Oil remains in piping

- For the gas piping (both discharge and suction gas pipings in case of the heat recovery system) after the branch, install a trap of 200 mm or larger using the piping included in the piping kit for connecting the outdoor unit. Otherwise, the refrigerant may stay in the piping, causing damage to the outdoor unit.

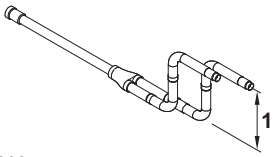

1 ≥200 mm

- If the piping length between the outdoor unit connecting pipe kit or between the outdoor units exceeds 2 m, create a rise of 200 mm or more in the gas line within a length of 2 m from the kit.

If ≤2 m

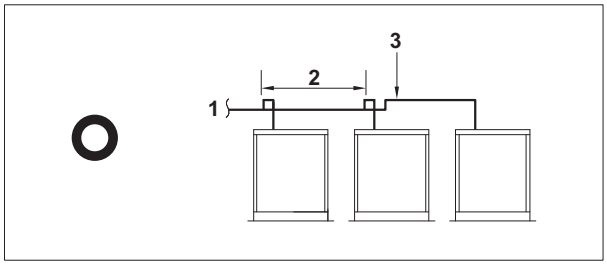

1 To indoor unit
2 ≤2 m
3 Piping between outdoor units

If ≥2 m

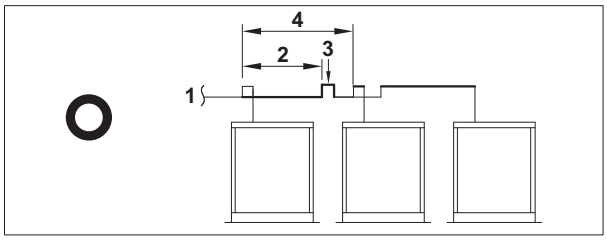

1 To indoor unit
2 ≤2 m
3 Rising height: ≥200 mm
4 ≥2 m

(1) If available on the site. Otherwise it cannot be increased.

10. Precautions on refrigerant piping

- Do not allow anything other than the designated refrigerant to get mixed into the refrigerant cycle. If any refrigerant gas leaks while working on the unit, ventilate the room thoroughly right away.
- Use R410A only when adding refrigerant
- Installation tools:
  Make sure to use installation tools (gauge manifold, charge hose, etc.) that are exclusively used for R410A installations to withstand the pressure and to prevent foreign materials (e.g., mineral oils and moisture) from mixing into the system.
- Vacuum pump:
  - Use a 2-stage vacuum pump with a non-return valve.
  - Make sure the pump oil does not flow oppositely into the system while the pump is not working.
  - Use a vacuum pump which can evacuate to –100.7 kPa (5 Torr, –755 mm Hg).

Protection against contamination when installing pipes

Take measures to prevent foreign materials like moisture and contamination from mixing into the system.

	Installation period	Protection method
	More than a month	Pinch the pipe
	Less than a month	Pinch or tape the pipe
	Regardless of the period	

Block all gaps in the holes for passing out piping and wiring using sealing material (field supply) (the capacity of the unit will drop and small animals may enter the machine).

- Use clean pipes only.
- Hold the pipe end downwards when removing burrs.
- Cover the pipe end when inserting it through a wall so that no dust or dirt enters the pipe.

NOTICE

After all the piping has been connected, make sure there is no gas leak. Use nitrogen to perform a gas leak detection.

10.1. Caution for brazing

- Make sure to blow through with nitrogen when brazing. Blowing through with nitrogen prevents the creation of large quantities of oxidized film on the inside of the piping. An oxidized film adversely affects valves and compressors in the refrigerating system and prevents proper operation.
- The nitrogen pressure should be set to 0.02 MPa (i.e., just enough so it can be felt on the skin) with a pressure-reducing valve.

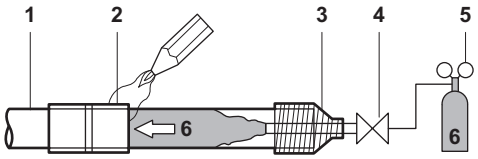

1 Refrigerant piping
2 Part to be brazed
3 Taping
4 Hands valve
5 Pressure-reducing valve
6 Nitrogen

Do not use anti-oxidants when brazing the pipe joints. Residue can clog pipes and break equipment:

- Do not use flux when brazing copper-to-copper refrigerant piping. Use phosphor copper brazing filler alloy (BCuP) which does not require flux.
- Flux has an extremely harmful influence on refrigerant piping systems. For instance, if chlorine based flux is used, it will cause pipe corrosion or, in particular, if the flux contains fluorine, it will deteriorate the refrigerant oil.

10.2. Connecting the refrigerant piping

NOTICE

Installation shall be done by an installer, the choice of materials and installation shall comply with the applicable legislation. In Europe, EN 378 is the applicable standard that shall be used.

Ensure that the field piping and connections are not subjected to stress.

Only use flare nuts included with the unit. Using different flare nuts may cause the refrigerant to leak.

10.2.1 Connecting refrigerant piping to the outdoor unit

INFORMATION

All local inter unit piping are field supplied except the accessory pipes.

NOTICE

Precautions when connecting field piping. Add brazing material as shown in the figure.

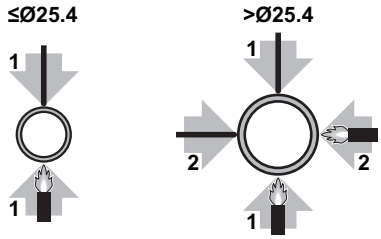

NOTICE

- Be sure to use the supplied accessory pipes when carrying out piping work in the field.
- Be sure that the field installed piping does not touch other pipes, the bottom panel or side panel. Especially for the bottom and side connection, be sure to protect the piping with suitable insulation, to prevent it from coming into contact with the casing.

Connection from the stop valves to the field piping can be done by using accessory pipes supplied as accessory.

NOTICE

Make sure that the on-site piping does not come in contact with other piping, the bottom frame or side panels of the unit.

The connections to the branch kits are the responsibility of the installer (field piping).

Precautions when connecting pipes

- See the following table for flare part machining dimensions.
- When connecting the flare nuts, apply refrigerant oil to the inside and outside of the flares and screw them in by hand three or four times at first.
  (Use ester oil or ether oil.)
- See the following table for tightening torque.
  (Applying too much torque may cause the flares to crack.)

After all the piping has been connected, check the gas leak with nitrogen.

Pipe size	Tightening torque (N·m)	A (mm)	Flare shape
Ø9.5	32.7~39.9	12.8~13.2	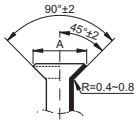
Ø12.7	49.5~60.3	16.2~16.6	
Ø15.9	61.8~75.4	19.3~19.7	

NOTICE

Not recommended but in case of emergency

You must use a torque wrench but if you are obliged to install the unit without a torque wrench, you may follow the installation method mentioned below.

After the work is finished, make sure to check that there is no gas leak.

When you keep on tightening the flare nut with a spanner, there is a point where the tightening torque suddenly increases. From that position, further tighten the flare nut with the angle shown below:

Pipe size	Further tightening angle	Recommended arm length of tool
Ø9.5	60~90°	±200 mm
Ø12.7	30~60°	±250 mm
Ø15.9	30~90°	±300 mm

- When loosening a flare nut, always use two wrenches in combination. When connecting the piping, always use a spanner and torque wrench in combination to tighten the flare nut.
- When connecting a flare nut, coat the flare (inner and outer faces) with ether oil or ester oil and hand-tighten the nut 3 to 4 turns as the initial tightening.

10.2.2 Connect piping to outdoor unit by using accessory pipes

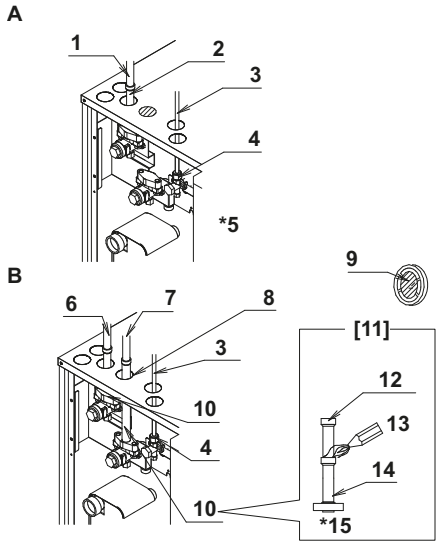

A Heat pump system (2-pipe)
B Heat recovery system (3-pipe)
1 Gas side piping (field supply)
2 Accessory pipe
3 Liquid side pipe (field supply)
4 Flare nut (Included in the unit)
5 Accessory pipe is not used. Blind flange remains on suction pipe.
6 Piping on HP/LP gas side (field supply)
7 Piping on suction gas side (field supply)
8 Cut off the hatched area and use it as a cover.
9 Hatched area
10 Accessory pipe
11 Guideline for pipe machining
12 Accessory pipe
13 Brazing
14 Accessory pipe
15 Before fitting to the product, apply brazing.

10.2.3 Branching the refrigerant piping

- For installation of the refrigerant branching kit, refer to the installation manual delivered with the kit.

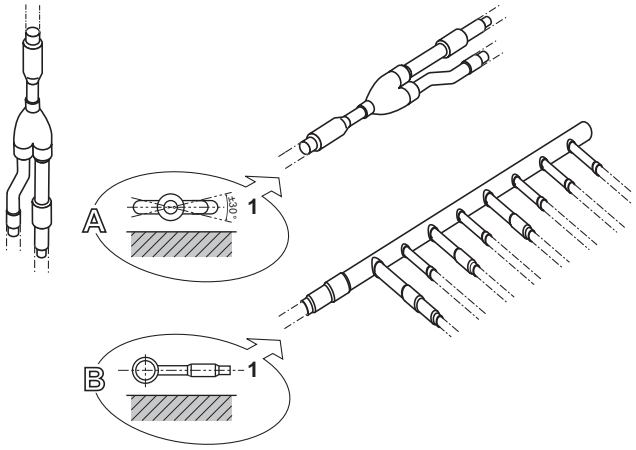

1 Horizontal surface

1 Mount the Refnet joint so that it branches either horizontally or vertically.

2 Mount the Refnet header so that it branches horizontally.

- Installation of the multi outdoor unit connection piping kit.

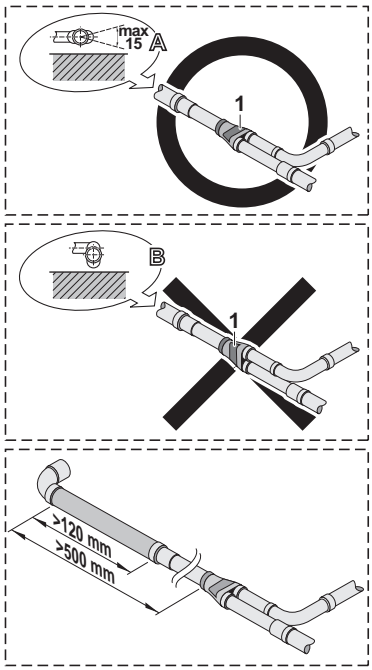

1 Install the joints horizontally, so that the caution label (1) attached to the joint comes to the top.
   - Do not tilt the joint more than 15° (see view A).
   - Do not install the joint vertically (see view B).

2 Make sure that the total length of the piping connected to the joint is absolute straight for more than 500 mm. Only if a straight field piping of more than 120 mm is connected, more than 500 mm of straight section can be ensured.

3 Improper installation may lead to malfunction of the outdoor unit.

10.3. Guidelines for handling stop valve

10.3.1 Cautions on handling the stop valve

- Make sure to keep appropriate stop valves open during operation.
- The figure below shows the name of each part required in handling the stop valve.
- The stop valve is factory closed.

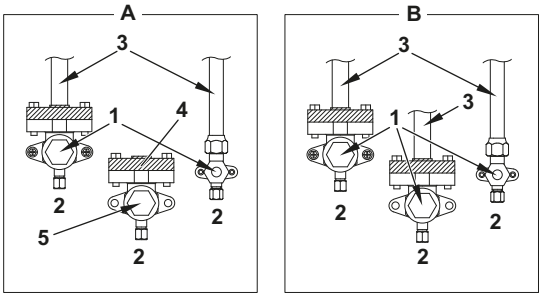

A Heat pump system (2-pipe)
B Heat recovery system (3-pipe)
1 Used stop valves
2 Service port and service port cover
3 Field piping connection (accessory)
4 Blind flange
5 Unused stop valve

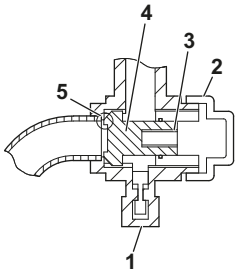

1 Service port
2 Cap
3 Hexagon hole
4 Shaft
5 Seal

10.3.2 How to use the stop valve

Opening the stop valve

1 Remove the valve cover.

2 Insert a hexagon wrench into the stop valve and turn the stop valve counterclockwise.

3 When the stop valve cannot be turned any further, stop turning. The valve is now open.

To fully open the Ø19.1 or Ø25.4 gas line stop valve, turn the hexagonal wrench until a torque between 27 and 33 N•m is achieved. Inadequate torque may cause leakage of refrigerant and breakage of the stop valve cap.

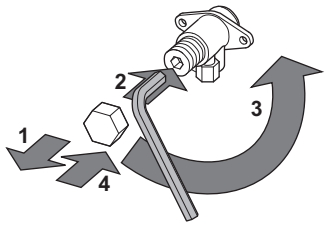

NOTICE

Pay attention that mentioned torque range is applicable for opening Ø19.1 and Ø25.4 gas line stop valves only.

Closing the stop valve

1 Remove the valve cover.

2 Insert a hexagon wrench into the stop valve and turn the stop valve clockwise.

3 When the stop valve cannot be turned any further, stop turning. The valve is now closed.

10.3.3 Cautions on handling the stop valve cover

- The stop valve cover is sealed where indicated by the arrow. Take care not to damage it.
- After handling the stop valve, make sure to tighten the stop valve cover securely. For the tightening torque, refer to the table below.
- Check for refrigerant leaks after tightening the stop valve cover.

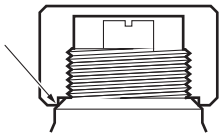

10.3.4 Cautions on handling the service port

- Always use a charge hose equipped with a valve depressor pin, since the service port is a Schrader type valve.
- After handling the service port, make sure to tighten the service port cover securely. For the tightening torque, refer to the table below.
- Check for refrigerant leaks after tightening the service port cover.

10.3.5 Tightening torques

	Tightening torque N•m (turn clockwise to close)					
	Shaft					
Stop valve size	Valve body	Hexagonal wrench	Cap (valve lid)	Service port	Flare nut	Gas side accessory pipe
Liquid side	5.4~6.6	4 mm	13.5~16.5	11.5~13.9	32,7	-
Gas side	27.0~33.0	10 mm	36.0~44.0		-	22-28

10.4. Leak test and vacuum drying

It is very important that all refrigerant piping work is done before the units (outdoor or indoor) are powered on.

When the units are powered on, the expansion valves will initialize. This means that they will close. Leak test and vacuum drying of field piping and indoor units is impossible when this happens.

Therefore, there will be explained 2 methods for initial installation, leak test and vacuum drying.

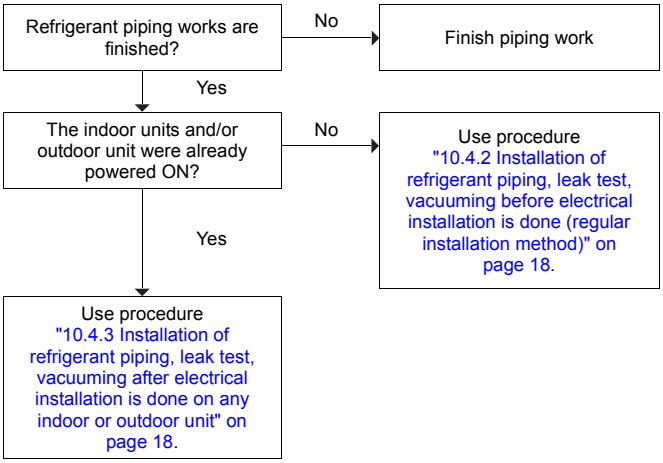

10.4.1 General guidelines

- Use a 2-stage vacuum pump with a non-return valve which can evacuate to a gauge pressure of –100.7 kPa (5 Torr absolute, –755 mm Hg).
- Connect the vacuum pump to the service port of all 3 stop valves to increase efficiency (refer to "10.4.4 Setup" on page 18).

NOTICE

Do not purge the air with refrigerants. Use a vacuum pump to evacuate the installation.

10.4.2 Installation of refrigerant piping, leak test, vacuuming before electrical installation is done (regular installation method)

When all piping work is complete, it is necessary to:

- Check for any leakages in the refrigerant piping.
- Perform vacuum drying to remove all moisture, air or nitrogen in the refrigerant piping.

If there is a possibility of moisture being present in the refrigerant piping, carry out the vacuum drying procedure below until all moisture has been removed.

All piping inside the unit has been factory tested for leaks.

Only field installed refrigerant piping needs to be checked. Therefore, make sure that all the outdoor unit stop valves are firmly closed before performing leak test or vacuum drying.

NOTICE

Make sure that all (field supplied) field piping valves are OPEN (not outdoor unit stop valves!) before you start leak test and vacuuming.

See "10.4.4 Setup" on page 18 and "10.4. Leak test and vacuum drying" on page 18.

10.4.3 Installation of refrigerant piping, leak test, vacuuming after electrical installation is done on any indoor or outdoor unit

Apply outdoor unit setting [2-21]=1 (refer to "Refrigerant recovery/ vacuuming mode" on page 35) before starting leak test and vacuuming. This setting will open field expansion valves to guarantee a R410A piping pathway.

NOTICE

- Make sure that all (field supplied) field piping valves are OPEN (not outdoor unit stop valves!) before you start leak test and vacuuming.
- Make sure that all indoor units connected to the outdoor unit are powered on.
- Wait until the outdoor unit has finished the initialization to apply setting [2-21].

When all piping work is complete, it is necessary to:

- Check for any leakages in the refrigerant piping.
- Perform vacuum drying to remove all moisture, air or nitrogen in the refrigerant piping.

If there is a possibility of moisture being present in the refrigerant piping, first carry out the vacuum drying procedure below until all moisture has been removed.

All piping inside the unit has been factory tested for leaks.

Only field installed refrigerant piping needs to be checked. Therefore, make sure that all the stop valves are firmly closed before performing leak test or vacuum drying.

See "10.4.4 Setup" on page 18 and "10.4. Leak test and vacuum drying" on page 18.

10.4.4 Setup

Heat pump system (2-pipe)

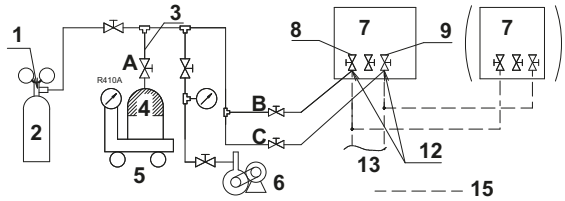

Heat recovery system (3-pipe)

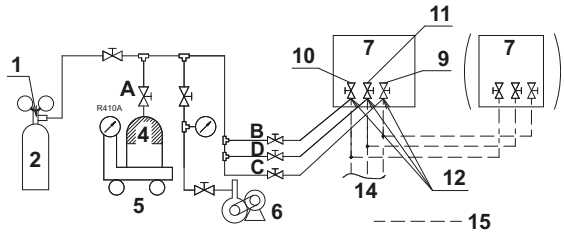

1	Pressure reducing valve
2	Nitrogen
3	Charge hose
4	Refrigerant R410A tank (siphon system)
5	Measuring instrument
6	Vacuum pump
7	Outdoor unit
8	Gas line stop valve (in case of heat pump system): HP/LP
9	Liquid line stop valve
10	HP/LP gas line stop valve
11	Suction gas line stop valve (in case of heat recovery system)
12	Stop valve service port (in case of heat recovery system)
13	To indoor unit
14	To indoor unit/BS unit
15	Field piping
A	Valve A
B	Valve B
C	Valve C
D	Valve D

Which valves?	State of valves
State of valves A, B, C and D and stop valves	Performing the airtightness test and vacuum drying (Valve A must always be closed. Otherwise the refrigerant in the unit will pour out.)
Valve A	Closed
Valve B	Open
Valve C	Open
Valve D	Open
Liquid stop valve	Closed
Suction gas stop valve	Closed
HP/LP stop valve	Closed

NOTICE

The connections to the indoor units and all indoor units should also be leak and vacuum tested. Keep any possible (field supplied) field piping valves open as well.

Refer to the indoor unit installation manual for more details. Leak test and vacuum drying should be done before the power supply is set to the unit. If not, see also the flow chart earlier described in this chapter (see "10.4. Leak test and vacuum drying" on page 18).

10.4.5 Leak test

The leak test must satisfy the specifications of EN 378-2:

1 Vacuum leak test:

1.1 Evacuate the system from the liquid and gas piping to –100.7 kPa (5 Torr) for more than 2 hours.

1.2 Once reached, turn off the vacuum pump and check that the pressure does not rise for at least 1 minute.

1.3 Should the pressure rise, the system may either contain moisture (see vacuum drying below) or have leaks.

2 Pressure leak test:

2.1 Break the vacuum by pressurizing with nitrogen gas to a minimum gauge pressure of 0.2 MPa (2 bar). Never set the gauge pressure higher than the maximum operation pressure of the unit, i.e. 4.0 MPa (40 bar).

2.2 Test for leaks by applying a bubble test solution to all piping connections.

2.3 Discharge all nitrogen gas.

NOTICE

Make sure to use a recommended bubble test solution from your wholesaler. Do not use soap water, which may cause cracking of flare nuts (soap water may contain salt, which absorbs moisture that will freeze when the piping gets cold), and/or lead to corrosion of flared joints (soap water may contain ammonia, which causes a corrosive effect between the brass flare nut and the copper flare).

10.4.6 Vacuum drying

To remove all moisture from the system, proceed as follows:

1 Evacuate the system for at least 2 hours to a target vacuum of –100.7 kPa.

2 Check that, with the vacuum pump turned off, the target vacuum is maintained for at least 1 hour.

3 Should you fail to reach the target vacuum within 2 hours or maintain the vacuum for 1 hour, the system may contain too much moisture.

4 In that case, break the vacuum by pressurizing with nitrogen gas to a gauge pressure of 0.05 MPa (0.5 bar) and repeat steps 1 to 3 until all moisture has been removed.

5 The outdoor unit stop valves can now be opened, and/or additional refrigerant can be charged. Refer to "16. Charging refrigerant" on page 31.

INFORMATION

After opening the stop valve, it is possible that the pressure in the refrigerant piping does not rise. This might be caused by e.g., the closed state of the expansion valve in the outdoor unit circuit, but does not present any problem for correct operation of the unit.

NOTICE

The connections to the indoor units and all indoor units should also be leak and vacuum tested. Keep, if existing, all (field supplied) field valves to the indoor units open as well.

Leak test and vacuum drying should be done before the power supply is set to the unit. If not, see "10.4. Leak test and vacuum drying" on page 18 for more information.

11. Pipe insulation

After finishing the leak test and vacuum drying, the piping must be insulated. Take into account the following points:

- Make sure to insulate the connection piping and refrigerant branch kits entirely.
- Be sure to insulate the liquid and gas piping (for all units).
- Use heat resistant polyethylene foam which can withstand a temperature of 70°C for liquid piping and polyethylene foam which can withstand a temperature of 120°C for gas piping.
- Reinforce the insulation on the refrigerant piping according to the installation environment.

Ambient temperature	Humidity	Minimum thickness
≤30°C	75% to 80% RH	15 mm
>30°C	≥80% RH	20 mm

Condensation might form on the surface of the insulation.

- If there is a possibility that condensation on the stop valve might drip down into the indoor unit through gaps in the insulation and piping because the outdoor unit is located higher than the indoor unit, this must be prevented by sealing up the connections. See below figure.

12. Water piping work

- The water pressure resistance of water piping of this outdoor unit is 1.96 MPa.
- The pipe connection on the unit is made of stainless steel.
  Connecting a water pipe made of a material other than stainless steel may result in corrosion of the pipe.
  Take preventive measures as necessary, for example by insulating the connection on the water pipe.
- The connection port for water piping is located in the front. The connection ports for drain piping are located in the front and back. When using the back port, change the plug from the back to the front and securely close it.
- Because the outdoor unit is to be installed indoors, carry out the piping work in such a way that no water may drip on the unit.
- The lateral length of the drain piping should be short (within 400 mm) and installed in a downward direction.
  The diameter of the drain pipe should be the same as the diameter of the drain connection on the unit (1/2B) or larger.
- The diameter of the water pipe should be the same as the diameter of the water connection on the unit (1-1/4) or larger.
- Install an air purge valve halfway along the water piping to prevent cavitation.
- After completing the drain piping work, make sure that the water runs smoothly without any clogging by dirt.

- Do not connect the drain outlet to the water outlet.
- Install the filter in the inlet of the water piping within a distance of 1.5 m from the outdoor unit.
  (If sand, waste or rust particles are mixed in the water circulation system, metal materials will become corroded.)
- Install insulation up to the base of heat exchanger as shown in the figure below.
- Install a gate valve for chemical cleaning in an easy position to handle.
- Use water pipes that comply with the local and national codes.
- Run the water pump to flush the water piping after filling it.
  Then, clean the filter.
- If there is a possibility of freezing, take preventive measures.
- Securely tighten the water piping connection with a tightening torque of 300 N•m or less.
  (If a larger torque is applied, the unit may be damaged.)

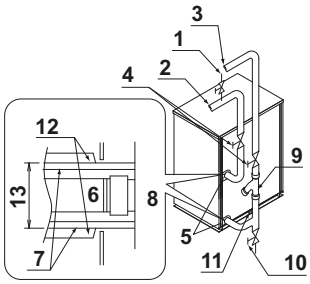

1 Air purge (field supply)
2 Water outlet
3 Water inlet
4 Gate valve (field supply)
5 Water connection
6 Water piping (field supply)
7 Insulation (field supply)
8 Heat exchanger
9 Filter (accessory)
10 Drain valve (field supply)
11 Drain connection
12 Insulation cover
13 80 mm or less

13. Handling of the brazed plate heat exchanger

CAUTION

A brazed plate heat exchanger is used for this unit. Because its structure is different from a conventional heat exchanger, it must be handled in a different manner.

13.1. When designing the equipment

- Install the filter at the water inlet side adjacent to the outdoor unit in order to prevent any foreign materials such as dust, sand, etc. from entering.
- Depending on the water quality, scale may stick to the plate heat exchanger. In order to remove this scale, it is necessary to clean it at a regular interval using chemicals. To this end, install a gate valve in the water piping. Set up a piping connection port on the piping between this gate valve and the outdoor unit for cleaning by chemicals.
- For the purpose of cleaning and water draining from the outdoor unit (water draining during a long period of non-use in winter or at the start of season-off), install an air purge plug (for joint use with cleaning port) (field supply) and a water draining plug at the inlet/outlet ports of water piping. In addition, install an automatic air purge valve (field supply) at the top of rising piping or at the top of a portion where air tends to stay.
- Install an additional cleanable filter (field supply) in front of the pump inlet.
- Carry out complete cooling/thermal insulation of the water piping and the outdoor unit drain piping. If complete cooling or thermal insulation has not been carried out, the unit may sustain damage during severe winters due to freezing, in addition to thermal loss.
- When you stop operation during night or winter, it is necessary to take measures to prevent water related circuits from natural freezing in areas where the ambient temperature drops below 0°C (by water drain off, keeping the circulation pump running, warming up by a heater, etc.). Freezing of water related circuits may result in damage to the plate heat exchanger. Therefore, please take appropriate measures depending on the circumstances of use.

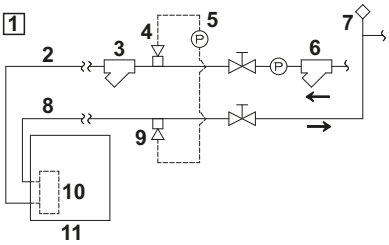

1 Example of piping
2 Water inlet piping
3 Filter (accessory)
4 Air purge plug (for joint use with cleaning port) (field supply)
5 Cleaning device (field supply)
6 Filter for pump (field supply)
7 Automatic air purge valve (field supply)
8 Water outlet piping
9 Joint use with water draining plug
10 Plate heat exchanger
11 Outdoor unit

13.2. Before operation or starting a test run

- Before starting a test run, please make sure that the piping work has been carried out in a proper manner. Especially, make sure that the filter, air purge valve, automatic water supply valve, and expansion tank are positioned at their places correctly.
- After the water circuit has been completely filled, first run the pump only, and then make sure that no air has been caught in the water circulation system and the water flow rate is correct. If any air has been caught or the flow rate is not high enough, the plate heat exchanger may freeze. Measure any water pressure loss before and after the outdoor unit and make sure that the flow rate is as designed. In case of any abnormality, stop the pump immediately and carry out troubleshooting to resolve the trouble.
- Inspect the filter at the inlet piping of the outdoor unit. Clean it if it is dirty.

13.3. Daily service and maintenance

- Management of water quality
  The plate heat exchanger has a structure that does not permit dismantling and cleaning, or replacing any parts. Please pay attention to the quality of water to be used for the plate heat exchanger in order to prevent corrosion and scale.
  The water to be used for the plate heat exchanger should have at least the quality as specified in the following table.
  When using corrosion prevention agents, scale depressant agents, etc, such agents should not corrode stainless steel and copper.
- Management of chilled water flow rate
  If the chilled water flow rate is not high enough, it will result in freezing damage to the plate heat exchanger. Check for any clogging of the filter, any air being caught, any reduction in the flow rate due to failure of the circulation pump by measuring the temperature and pressure differences at the inlet and outlet ports of the plate heat exchanger. If the difference in the temperature or pressure has increased beyond the allowed range, this indicates that the flow rate has decreased. Stop the operation and remove the cause before restarting operation.
- Steps to be taken when the freezing protection device was activated
  When the freezing protection device was activated during operation, eliminate the cause before restarting operation. If the freezing protection device was activated once, a partial freezing has occurred. If you restart operation without removing the cause, the ice cannot be melted and the plate heat exchanger will be blocked, resulting in damage to the plate heat exchanger, which may cause the refrigerant to start leaking or water entering the refrigerant circuit.

13.4. Water quality

INFORMATION

Water quality must be in accordance with EU directive 98/83 EC.

Water quality standards for chilled water, hot water and make-up water(1)(2) guideline

	Cooling water system(b)					
	Circulation system		Hot water system(c)		Tendency(d)	
Item(a)	Circulation water	Make-up water	Circulation water (20°C ~ 60°C)	Make-up water	Corrosion	Scale
Standard items						
pH (25°C)	6.5~8.2	6.0~8.0	7.0~8.0	7.0~8.0	○	○
Electrical Conductivity (mS/m) (25°C)	<80	<30	<30	<30	○	○
Chloride ions (mg cl^-/l)	<200	<50	<50	<50	○	
Sulfate ions (mg SO_4^{2-} /l)	<200	<50	<50	<50	○	
Acid consumption (pH 4.8) (mg $CaCO_3$/l)	<100	<50	<50	<50		○
Total hardness (mg $CaCO_3$/l)	<200	<70	<70	<70		○
Calcium hardness (mg $CaCO_3$/l)	<50	<50	<50	<50		○
Ionic-state silica (mg SiO_2/l)	<50	<30	<30	<30		○
Reference items						
Iron (mg Fe/l)	<1.0	<0.3	<1.0	<0.3	○	○
Copper (mg Cu/l)	<0.3	<0.1	<1.0	<0.1	○	
Sulfate ion (mg S^{2-}/l)	—	—	—	—	○	
Ammonium ion (mg NH_4^+/l)	<1.0	<0.1	<0.3	<0.1	○	
Residual chlorine (mg Cl/l)	<0.3	<0.3	<0.25	<0.3	○	
Free carbon dioxide (mg CO_2/l)	<4.0	<4.0	<0.4	<4.0	○	
Stability index	6.0~7.0	—	—	—	○	○

(a) These items represent typical causes of corrosion and scale.
(b) In a condenser water circuit that uses a closed cooling tower, the closed circuit circulating water and make-up water must meet the water quality standards for the hot water system, and passing water and make-up water must satisfy those for the circulation type cooling water system.
(c) Corrosion has a tendency to occur when water temperature is high (40°C or higher), and if metals with no protective coating are directly exposed to water, it would be a good idea to take effective measures against corrosion such as adding a corrosion inhibitor or deaeration treatment.
(d) The circle marks in the columns indicate a tendency for corrosion or scale to develop.

(1) The supply water must be clean tap water, industrial water or clean underground water. Do not use purified or softened water.
(2) Once through water may cause corrosion. Do not use once through water.

13.5. Maintenance of plate heat exchanger

The performance of a plate heat exchanger may decline due to scale accumulation. It may be damaged by freezing due to the decrease in the flow rate. For this reason, it is necessary to carry out programmed maintenance at regular intervals in order to prevent scale from being generated.

- Before entering the season for use, carry out the following inspections:
  - Conduct a water quality test and make sure that it is within the standard guideline.
  - Clean the filter.
  - Make sure that the water flow rate is correct.
  - Make sure that the operational conditions (pressure, flow rate, outlet temperature, etc.) are normal.
- Because a plate heat exchanger has a structure which does not permit disassembling and cleaning, follow the following procedures for cleaning:
  - For maintenance purposes, it is required to provide a connection port on the water inlet and on the water outlet. You must connect a circulation pump in between these 2 connection ports when cleaning the plate heat exchanger with chemicals.
    For cleaning scale in the plate heat exchanger, it is recommended to use a solution with 5% diluted formic, citric, oxalic, acetic or phosphoric acid.
    Never use hydrochloric, sulphuric or nitric acid because such solutions have a strong corrosive feature.
  - Make sure to provide a stop valve in front of the inlet water pipe connection port and a stop valve after the outlet water pipe connection port.
  - Connect the piping for circulation of cleaning chemicals to the inlet piping of the plate heat exchanger. Fill a cleaning solution of 50~60°C for a while in the plate heat exchanger. Then, circulate the cleaning solution using a pump for 2~5 hours.
    The time for cleaning depends on the temperature of the cleaning solution or the degree of scale accumulation. Therefore, please watch the change of the dirtiness (colour) of the cleaning solution to determine the level of removal of scale.
  - After circulating the cleaning solution, discharge the solution from the plate heat exchanger, fill the heat exchanger with a solution of 1-2% sodium hydroxide (NaOH) or sodium bicarbonate ($NaHCO_3$). Circulate this solution for 15-20 minutes for neutralization purpose.
  - After the process of neutralization has been completed, rinse the inside of the plate heat exchanger with care using fresh and clean water.
  - When using any commercially available cleaning agent, check in advance that such agent has no corrosive features against stainless steel and copper.
  - For details of the cleaning method, ask the manufacturer of the related cleaning agent.
- After cleaning has been completed, check that the unit can be operated in a normal fashion.

14. Electrical wiring work

14.1. Precautions on electrical wiring work

WARNING

Electrical installation. All field wiring and components must be installed by a licensed electrician and must comply with the applicable legislation.

NOTICE

Electrical wiring work recommendations. To persons in charge of electrical wiring work: Do not operate the unit until the refrigerant piping is complete. "10.4. Leak test and vacuum drying" on page 18. Running the unit before the piping is ready will break the compressor.

DANGER: Electrical shock

See "2. General safety precautions" on page 2.

WARNING

- A main switch or other means for disconnection, having a contact separation in all poles, must be incorporated in the fixed wiring in accordance with the applicable legislation.
- Use only copper wires.
- All field wiring must be carried out in accordance with the wiring diagram supplied with the unit and the instructions given below.
- Never squeeze bundled cables and be sure that it does not come in contact with the non-insulated piping and sharp edges. Be sure no external pressure is applied to the terminal connections.
- Power supply wires must be attached securely.
- If the power supply has a missing or wrong N-phase, equipment will break down.
- Be sure to establish an earth. Do not earth the unit to a utility pipe, surge absorber, or telephone earth. Incomplete earth may cause electrical shock.
- Be sure to install an earth leakage protector in accordance with the applicable legislation. Failure to do so may cause electric shock or fire.
- Be sure to use a dedicated power circuit, never use a power supply shared by another appliance.
- When installing the earth leakage protector be sure that it is compatible with the inverter (resistant to high frequency electric noise) to avoid unnecessary opening of the earth leakage protector.
- As this unit is equipped with an inverter, installing a phase advancing capacitor not only will deteriorate power factor improvement effect, but also may cause a capacitor abnormal heating accident due to high-frequency waves. Therefore, never install a phase advancing capacitor.
- Be sure to install the required fuses or circuit breakers.
- Do not operate until refrigerant piping work is completed. (If operated before completion of the piping work, the compressor may break down.)
- Never remove a thermistor, sensor, etc., when connecting power wiring and transmission wiring.
  (If operated without thermistor, sensor, etc., the compressor may break down.)

WARNING

- The reversed phase protection detector of this product only functions when the product starts up. Consequently reversed phase detection is not performed during normal operation of the product.
- The reversed phase protection detector is designed to stop the product in the event of an abnormality when the product is started up.
- Replace two of the three phases (L1, L2, and L3) during reverse-phase protection abnormality.
- If there exists the possibility of reversed phase after a momentary black out and the power goes on and off while the product is operating, attach a reversed phase protection circuit locally. Running the product in reversed phase can break the compressor and other parts.

Point of attention regarding quality of the public electric power supply

This equipment complies with respectively:

- EN/IEC 61000-3-11(1) provided that the system impedance Z_{sys} is less than or equal to Z_{max}.
- EN/IEC 61000-3-12(2) provided that the short-circuit power S_{sc} is greater than or equal to the minimum S_{sc} value.

At the interface point between the user's supply and the public system. It is the responsibility of the installer or user of the equipment to ensure, by consultation with the distribution network operator if necessary, that the equipment is connected only to a supply with respectively:

- Z_{sys} less than or equal to Z_{max}.
- S_{sc} greater than or equal to the minimum S_{sc} value.

	$Z_{max}(\Omega)$	Minimum S_{sc} value (kVA)
RWEYQ8	—	—
RWEYQ10	—	—
RWEYQ16	—	1811
RWEYQ18	—	1811
RWEYQ20	—	1811
RWEYQ24	—	2716
RWEYQ26	—	2716
RWEYQ28	—	2716
RWEYQ30	—	2716

INFORMATION

Multi outdoor unit systems are standard combinations.

14.2. Internal wiring – Parts table

Refer to the wiring diagram sticker on the unit. The abbreviations used are listed below:

A1P ..... Printed circuit board (main)
A2P ..... Printed circuit board (inv)
A3P ..... Printed circuit board (noise filter)
A4P ..... Printed circuit board (fan)
BS1~BS5 ..... Push button switch (A1P)
C63,C66 ..... Capacitor (A3P, A6P)
DS1 ..... DIP switch (A1P)
E1HC ..... Crankcase heater
F1U ..... Fuse (250 V, 5 A, T) (A3P)
F1U,F2U ..... Fuse (250 V, 10 A, T) (A1P)
H1P~8P ..... Pilot lamp (A1P) (service monitor - orange)
[H2P] - prepare, test ... flickering
- malfunction detection ... light up
HAP ..... Pilot lamp (A1P) (service monitor - green)
K1M ..... Magnetic contactor (M1C) (A2P)
K1R ..... Magnetic relay (A2P)
K3R ..... Magnetic relay (Y2S) (A1P)
K5R ..... Magnetic relay (Y3S) (A1P)
K6R ..... Magnetic relay (Y4S) (A1P)
K7R ..... Magnetic relay (M1F, M2F) (A1P)
K8R ..... Magnetic relay (Y6S) (A1P)
K9R ..... Magnetic relay (Y2S) (A1P)
K10R ..... Magnetic relay (operation output) (A1P)
K11R ..... Magnetic relay (Y5S) (A1P)
K12R ..... Magnetic relay (Y7S) (A1P)
K13R ..... Magnetic relay (E1HC) (A1P)
L1R ..... Reactor
M1C ..... Motor (compressor)
M1F,M2F ..... Motor (fan inverter cooling)
PS ..... Switching power supply
Q1RP ..... Phase reversal detection circuit (A1P)
R50, R59 ..... Resistor
R95 ..... Resistor (current limiting)
R1T ..... Thermistor (fin) (A2P)
R2T ..... Thermistor (suction)
R3T ..... Thermistor (M1C, discharge)
R4T ..... Thermistor (heat exc. gas pipe)
R5T ..... Thermistor (subcool heat exc.)
R6T ..... Thermistor (receiver liquid pipe)
S1NPH ..... Pressure sensor (high)
S1NPL ..... Pressure sensor (low)
S1PH ..... Pressure switch (high)
S1S ..... Selector switch
S2S ..... Selector switch
T1A ..... Current sensor (A4P)
T1R ..... Transformer
V1CP ..... Safety devices input
V1R ..... Diode bridge (A2P)
V2R ..... Power module (A2P)
X1A, X3A ..... Connector (Y1E, Y3E)
X1M ..... Terminal strip (power supply)
X1M ..... Terminal strip (control) (A1P)
X2M ..... Terminal strip (operation output)
X3M ..... Terminal strip (interlock)
X4M ..... Terminal strip (M1C)
Y1E ..... Electronic expansion valve (main)
Y3E ..... Electronic expansion valve (subcool)
Y1S ..... Solenoid valve (hot gas bypass)
Y2S ..... Solenoid valve (oil return)
Y3S ..... Solenoid valve (receiver pressurization)
Y4S ..... Solenoid valve (receiver gas purge)
Y5S ..... Solenoid valve (main 4-way valve)
Y6S ..... Solenoid valve (liquid pipe)
Y7S ..... Solenoid valve (sub 4-way valve)
Z1C ..... Noise filter (ferrite core)
Z1F ..... Noise filter (with surge absorber)
L1,L2,L3 ..... Live
N ..... Neutral
..... Field wiring
..... Terminal strip
..... Connector
..... Terminal
..... Protective earth (screw)

(1) European/International Technical Standard setting the limits for voltage changes, voltage fluctuations and flicker in public low-voltage supply systems for equipment with rated current ≤75 A.
(2) European/International Technical Standard setting the limits for harmonic currents produced by equipment connected to public low-voltage systems with input current >16 A and ≤75 A per phase.

BLK .....Black
BLU .....Blue
BRN.....Brown
GRN .....Green
GRY .....Grey
ORG .....Orange
PNK.....Pink
RED.....Red
WHT .....White
YLW.....Yellow

INFORMATION

The wiring diagram on the outdoor unit is only for the outdoor unit. For the indoor unit or optional electrical components, refer to the wiring diagram of the indoor unit.

14.3. System overview of field wiring

Field wiring consists of power supply (always including earth) and indoor-outdoor communication (=transmission) wiring.

Examples:

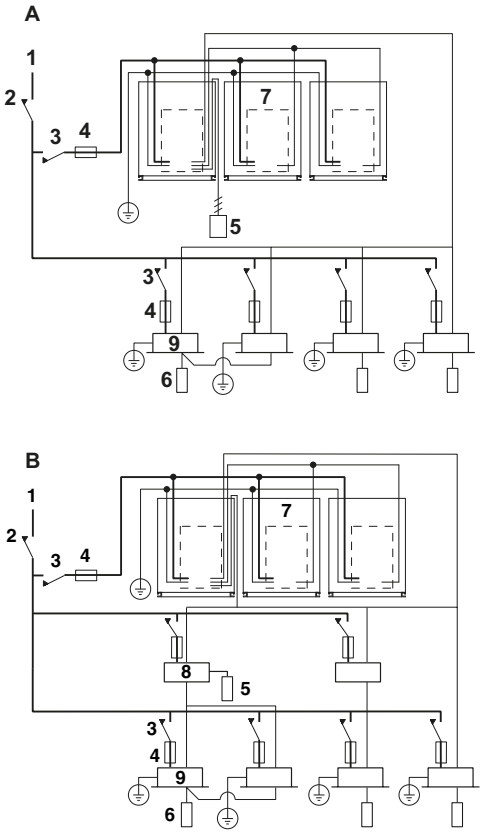

A Heat pump system
B Heat recovery system
1 Field power supply
2 Main switch
3 Earth leak detector
4 Fuse
5 Cool/heat selector
6 Remote controller
7 Outdoor unit
8 BS unit
9 Indoor unit
— Power supply wiring
— Transmission wiring

14.4. Opening and closing the electrical component box

CAUTION

Do not apply excessive force when opening the electrical component box cover. Excessive force can deform the cover.

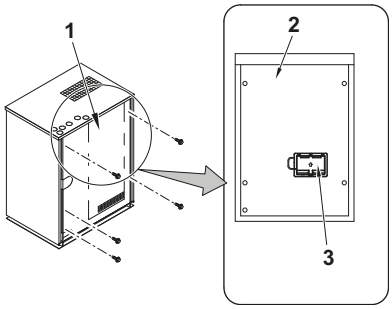

1 Electrical component box
2 Cover of electrical component box
3 Inspection cover

14.5. Requirements

A power circuit (see table below) must be provided for connection of the unit. This circuit must be protected with the required safety devices, i.e. a main switch, a slow blow fuse on each phase and an earth leak detector.

	Minimum circuit ampere	Recommended fuses
RWEYQ8+10 RWEYQ16+18+20 RWEYQ24+26+28+30	12.6 A 25.3 A 37.9 A	20 A 32 A 50 A
Phase and frequency: 3N~ 50 Hz Voltage: 380-415 V Transmission line section: 0.75~1.25 mm^2, maximum length is 1000 m. When the total transmission wiring exceeds these limits, this may result in communication errors.		

NOTICE

Be sure to use a high-speed residual current circuit breaker (300 mA).

NOTICE

- Use insulated wire for the power cord.
- Select the power supply cable in accordance with relevant local and national regulations.
- The wire size must comply with the applicable local and national code.

CAUTION

- Use a power wire pipe for the power wiring.
- Be sure to connect the power wiring to the power wiring terminal block and secure it as described in "14.6.3 Power supply wiring and transmission wiring in the unit" on page 26.
- Transmission wiring should be secured as described in "14.6.3 Power supply wiring and transmission wiring in the unit" on page 26.
- Secure the wiring with the accessory clamps so that it does not touch the piping.
- Make sure the wiring and the electrical component box cover do not stick up above the structure, and close the cover firmly.

14.6. Routing and connection of power supply wiring and transmission wiring

It is important to keep the power supply and the transmission wiring separated from each other. In order to avoid any electrical interference the distance between both wiring should always be at least 50 mm.

14.6.1 General outlook

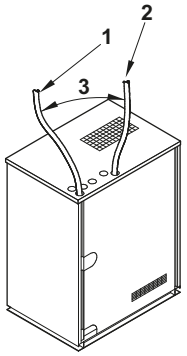

1 Power supply wiring and wiring for pump operation (High voltage)
2 Connection wiring (Low voltage)
3 Keep separate (secure minimum distance)

14.6.2 Transmission wiring routing and connection in the system

The transmission wiring outside the unit should be wrapped and routed together with the field piping.

Rules for transmission wiring routing

- Be sure to follow the limits below. If the unit-to-unit cables are beyond these limits, it may result in malfunction of transmission:
  - Maximum wiring length: 1000 m
  - Total wiring length: 2000 m
  - Maximum inter unit wiring length between outdoor units: 30 m
  - Transmission wiring to cool/heat selector: 500 m
  - Maximum number of branches: 16
- Up to 16 branches are possible for unit-to-unit cabling. No branching is allowed after branching (see figure below).

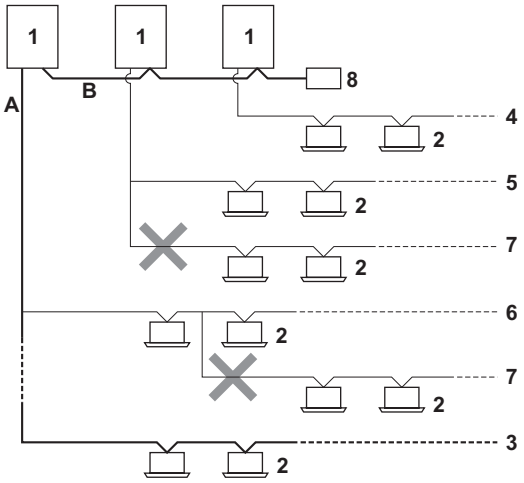

1 Outdoor unit
2 Indoor unit
3 Main line
4 Branch line 1
5 Branch line 2
6 Branch line 3
7 No branch is allowed after branch
8 Central user interface (etc...)
A Transmission wiring between outdoor unit and indoor unit(s)
B Transmission wiring between outdoor units

- Never connect the power supply to transmission wiring terminal block. Otherwise the entire system may break down.
- Never connect 400 V to the terminal block of the transmission wiring. Doing so will break the entire system:
  - The wiring from the indoor units must be connected to the F1/F2 (In-Out) terminals on the PC board in the outdoor unit.
  - After installing the transmission wires inside the unit, wrap them along with the on-site refrigerant pipes using finishing tape, as shown in figure below.

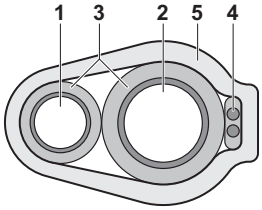

1 Liquid pipe
2 Gas pipe
3 Insulator
4 Transmission wiring (F1/F2)
5 Finishing tape

For the above wiring, always use vinyl cords with 0.75 to 1.25 mm^2 sheath or cables (2-core wires). (3-core wire cables are allowable for the cooler/heater changeover user interface only.)

NOTICE

- Be sure to keep the power line and transmission line apart from each other. Transmission wiring and power supply wiring may cross, but may not run parallel.
- Transmission wiring and power supply wiring may not touch internal piping in order to avoid wire damage due to high temperature piping.
- Firmly close the lid and arrange the electrical wires so as to prevent the lid or other parts from coming loose.

In case of single outdoor unit system

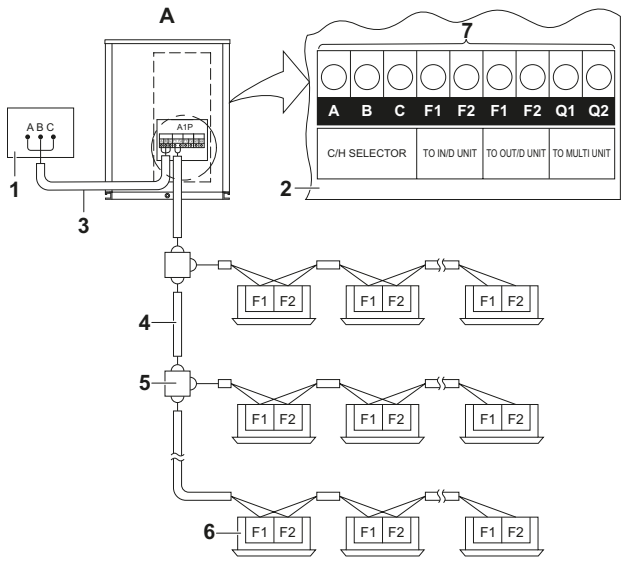

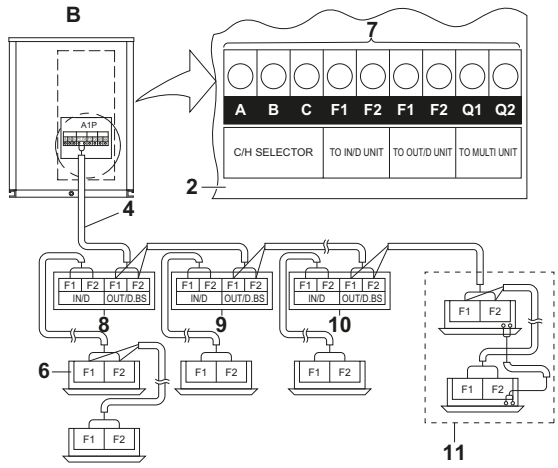

A Heat pump system
B Heat recovery system
1 COOL/HEAT selector
2 PC board (A1P)
3 Take care of the polarity
4 Use the conductor of sheathed wire (2 wire) (no polarity)
5 Terminal board (field supply)
6 Indoor unit
7 Never connect the power wire.
8 BS unit A
9 BS unit B
10 Last BS unit
11 Cooling only unit

In case of multi outdoor unit system

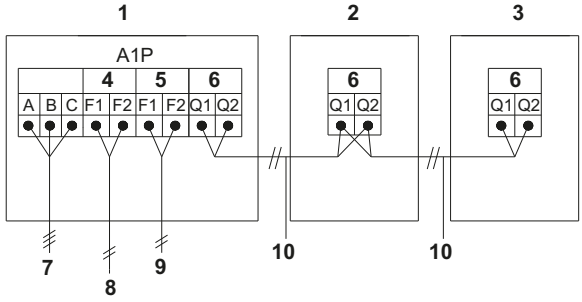

1 Unit A (Master unit)
2 Unit B (Slave unit 1)
3 Unit C (Slave unit 2)
4 TO IN/D UNIT
5 TO OUT/D UNIT
6 TO MULTI UNIT
7 To COOL/HEAT selector (only Heat pump system)
8 Outdoor-indoor unit transmission (F1/F2)
9 Outdoor-other system transmission (F1/F2)
10 Outdoor-outdoor unit transmission (Q1/Q2)

- The transmission wiring between the outdoor units in the same pipe line must be connected to the Q1/Q2 (Out Multi) (10) terminals.
  Connecting the wires to the F1/F2 (Out-Out) (9) terminals results in system malfunction.
- The wiring for the other lines must be connected to the F1/F2 (Out-Out) (9) terminals of the PC board in the outdoor unit to which the transmission wiring for the indoor units is connected.
- The outdoor unit to which the transmission wiring for the indoor units is connected is master unit.

14.6.3 Power supply wiring and transmission wiring in the unit

Make sure to connect the power wire to the power terminal block and fix it using attached clamp as shown below.

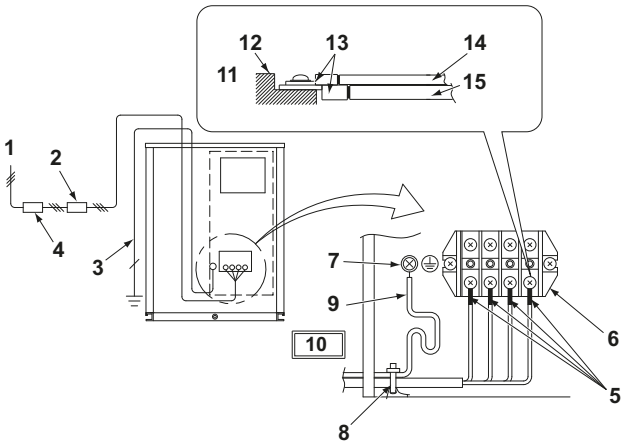

1 Power supply
(3N~, 380-415 V)
2 Branch switch, overcurrent breaker
3 Earth wire
4 Earth leakage breaker
5 Attach insulation sleeves.
6 Power supply terminal block
7 Earth terminal
8 Fix the earth wires along with the power wires using the accessory clamp.
9 Earth wire
10 When wiring, do not allow the earth wires to contact the compressor lead wires. If the wires contact each other, adverse effects may occur to other units.
11 When connecting two wires to one terminal, ensure that the crimp-style terminals face each other back to back. Make sure that the wire of the smaller gauge is located above.
12 Terminal block
13 Crimp-style terminal
14 Wire gauge: Small
15 Wire gauge: Large

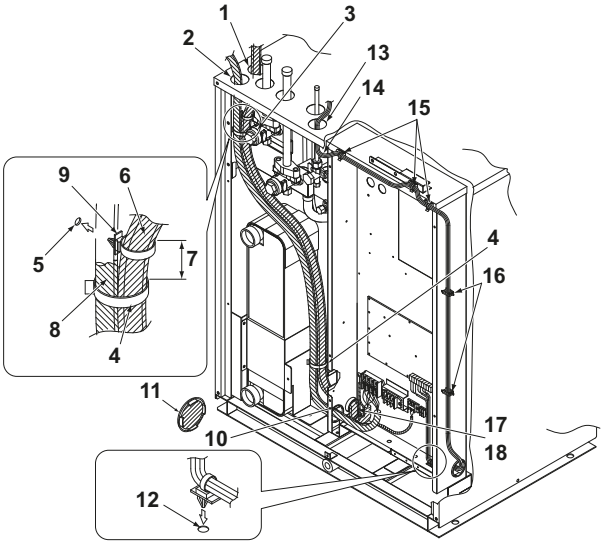

1 Intake for power supply wiring and pump operation output (high voltage)
2 Intake for power pass-through wiring (in case of multi outdoor unit system)
3 HP/LP stop valve (high temperature part)
4 Fix the power supply wiring and pump operation output (high voltage) with the accessory clamp.
5 Insert the accessory clamp in the hole of the fixing plate for stop valve.
6 Power supply wiring and pump operation output (high voltage)
7 Approximately 50 mm
8 Power supply pass-through wiring
9 Fix the power supply wiring and pump operation output (high voltage) with the accessory clamp to prevent them from touching with the stop valve for discharge gas.
10 Use the through hole cover for power supply pass-through by cutting the hatched area.
11 Hatched area
12 Insert the accessory clamp in the hole in the bottom of the electrical component box.
13 Intake for transmission wiring (low voltage)
14 Make sure to provide for a downward loop in the transmission wiring right in front of the location where the wiring is to be fixed onto the top plate of the electrical component box. This in order to prevent that condensate drips off the wiring into the electrical component box.
15 Fix the transmission wiring with the accessory clamps.
16 Pass the transmission wiring (low voltage) through the wire clip.
17 Fix the power supply wiring and pump operation output (high voltage) to the bottom of electrical component box with the accessory clamp.
18 Do not bundle the power supply wiring.

NOTICE

- When routing earth wires, secure clearance of 50 mm or more away from compressor lead wires. Failure to observe this instruction properly may adversely affect correct operation of other units connected to the same earth.
- When connecting the power supply, the earth connection must be made before the current-carrying connections are established. When disconnecting the power supply, the current-carrying connections must be separated before the earth connection is. The length of the conductors between the power supply stress relief and the terminal block itself must be as such that the current-carrying wires are tautened before the earth wire is in case the power supply is pulled loose from the stress relief.

NOTICE

Precautions when laying power wiring:

- Do not connect wiring of different thicknesses to the power terminal block (slack in the power wiring may cause abnormal heat).
- When connecting wiring which is the same thickness, do as shown in the figure below.

- For wiring, use the designated power wire and connect firmly, then secure to prevent external pressure being exerted on the terminal board.
- Use an appropriate screwdriver for tightening the terminal screws. A screwdriver with a small head will damage the head and make proper tightening impossible.
- Over-tightening the terminal screws may break them.
- See the table below for tightening torque for the terminal screws.

Tightening torque (N•m)	
M5 (Power terminal block)	2.0~3.0
M5 (Earth)	3.2~3.9
M3 (Inter-unit wiring terminal block)	0.8~0.97

NOTICE

Recommendations when connecting the earth wire

Wire it so that it comes through the cut out section of the cup washer. (An improper earth connection may prevent a good earthing from being achieved.)

14.6.4 Setting the interlock circuit and pump operation output

Use insulated wires of the size as mentioned below having rated voltage of 250 V or higher:

- For single core: 1.25 mm^2 or larger (use conduit tubes)
- For multiple cores: 0.75 mm^2 or larger

The wiring for pump operation output is to be procured locally.

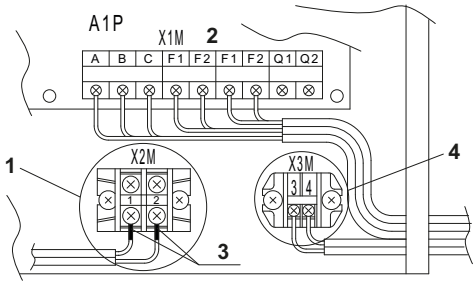

1 Pump operation output terminal (X2M)
For linking water pump operation to system operation, the water pump operation circuit wiring is to be connected to terminals 1 and 2 (X2M).
Contact specifications: 220 VAC, 3 mA-0.5 A

2 PC board (A1P)

3 Mount an insulation sleeve.

4 **Connection of interlock circuit**
Do not forget to connect an interlock circuit (auxiliary a-contact of electromagnetic switch for the water pump) to each outdoor unit.
(Select an auxiliary a-contact able to switch minimum load of 15 V DC, 1 mA.)
When connecting for each outdoor unit
Connect to the terminal block (X3M) as shown in the bottom right of the above sketch.
When connecting multiple outdoor units as 1 single unit (centralized interlock)
For this unit, it is possible to make a centralized interlock of multiple outdoor units using an adapter (sold separately as an accessory) for external control of outdoor units.
For details of wiring connection, refer to "How to perform the centralized interlock wiring".

14.6.5 How to perform the centralized interlock wiring

When centralized interlock is done, no wiring to terminal block X3M is necessary when centralized interlock is employed.

In case of a multi outdoor unit system, outdoor/outdoor transmission wiring shall be done for the master unit only.

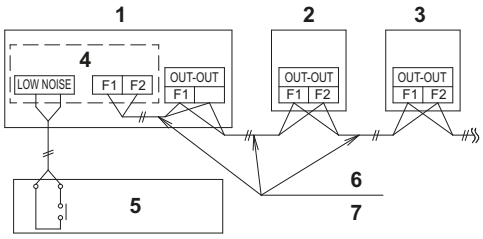

1 Outdoor unit A
2 Outdoor unit B
3 Outdoor unit C
4 Adapter for external control
5 Interlock circuit of water pump
6 Outdoor/outdoor transmission wiring
7 Use the conductor of sheathed wire (2 wire) (no polarity)

14.6.6 Setting the cool/heat operation type

Performing cool/heat setting with the remote controller connected to the indoor unit.
Keep the COOL/HEAT selector switch (DS1) on the outdoor unit PC board (A1P) at the factory setting position OFF.

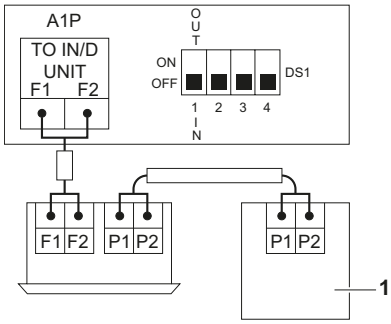

1 Remote controller

Performing cool/heat setting with the COOL/HEAT selector.
Connect the COOL/HEAT selector (optional) to the A/B/C terminals and set the COOL/HEAT selector switch (DS1) on the outdoor unit PC board (A1P) to ON.

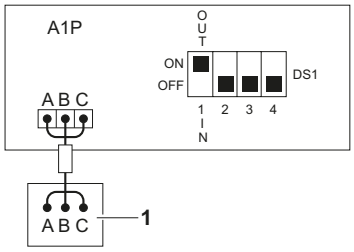

1 COOL/HEAT selector

15. Making field settings

To continue the configuration of the VRV IV water-cooled system, it is required to give some input to the logic board of the unit. This chapter will describe how manual input is possible by operating the push buttons/DIP switches on the logic board and reading the feedback from the LED indications on the logic board.

The contents of the actual settings is discussed and explained on page 33.

15.1. Accessing the push buttons on the logic board

To access you have to remove the front plate (see figure).

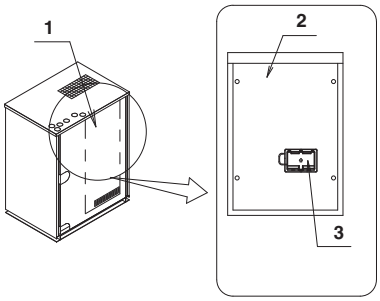

1 Electrical component box
2 Cover of electrical component box
3 Inspection cover

Now you can open the inspection cover of the electrical component box front plate (see figure).

You can see the five push buttons and the 8 LED and DIP switches.

Operate the switches and push buttons with an insulated stick (such as a closed ball-point pen) to avoid touching of live parts.

CAUTION

Make sure to re-attach the inspection cover into the electronic component box cover and to close the front plate's inspection cover after the job is finished.

Location of the LED indicators, push buttons and DIP switches:

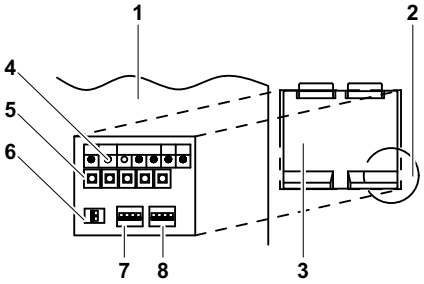

1 Electrical component box cover
2 Lift this portion to open the inspection door.
3 Inspection door
4 LED (H1P~H7P)
5 Push button (BS1~5)
6 DIP switch 3 (DS3-1~2)
7 DIP switch 1 (DS1-1~4)
8 DIP switch 2 (DS2-1~4)

Throughout the manual, the status of the LEDs is indicated as follows:

● OFF
☼ ON
◑ Blinking

15.2. Operating the push buttons and DIP switches on the logic board

15.2.1 Operating the push buttons

By operating the push buttons it is possible to:

- Perform special actions (refrigerant charge, test run, etc).
- Perform field settings (demand operation, interlock setting, etc).

Below procedure explains how to operate the push buttons to reach the required mode in the menu, select the correct setting and modify the value of the setting. This procedure can be used any time special settings and regular field setting are discussed in this manual (see page 33).

Setting definition: [A-B]=C; A=mode (1:Mode1; 2:Mode2; M:Monitoring Mode); B=setting; C=setting value. A, B and C are numerical values for field settings. Parameter C has to be defined. It can be a chosen from a set (0, 1, 2, 3, 4, 5, …) or regarded as an ON/OFF (1 or 0) depending on the contents. This is informed when the field setting is explained (see page 33).

By pushing the push buttons, the LEDs will display the different modes.

INFORMATION

During special operation (e.g., refrigerant charging, test run, etc.) or when an malfunction happened, information will be displayed.

Functions of the push button switches which are located on the outdoor PCB (A1P)

Turn on the power supply of the outdoor unit and all indoor units.

When the communication between indoor units and outdoor unit(s) is established and normal, the LED indication state will be as below (H2P OFF) (default situation when shipped from factory).

MODE	TEST: ◑ / HWL: ☼	C/H SELECT			L.N.O.P	DEMAND
		IND	MASTER	SLAVE		
●	●	☼	●	●	●	●
H1P	H2P	H3P	H4P	H5P	H6P	H7P

BS1	BS2	BS3	BS4	BS5
MODE	SET	RETURN	TEST	RESET

BS1 MODE For changing the set mode
BS2 SET For field setting
BS3 RETURN For field setting
BS4 TEST For test operation
BS5 RESET For resetting the address when the wiring is changed or when an additional indoor unit is installed

When above situation cannot be confirmed after 12 minutes, the malfunction code can be checked on the indoor unit user interface and the outdoor unit LED indication. Solve the malfunction code accordingly. The communication wiring should be checked at first.

In case of a multi outdoor unit system, the LED state will be as follows depending on the outdoor unit:

	H1P	H2P	H3P	H4P	H5P	H6P	H7P	H8P
Master unit	●	●	☼	●	●	●	●	☼
Slave unit 1	●	●	●	●	●	●	●	◑
Slave unit 2	●	●	●	●	●	●	●	●

Making settings is done via the master outdoor unit.

INFORMATION

Be sure to turn the power on at least 6 hours before operation in order to have power running to the crank case heater.

Accessing modes

BS1 is used to change to the mode you want to access.

- Access mode 1 (default system mode)

Push BS1 one time (H1P is OFF)

H1P	H2P	H3P	H4P	H5P	H6P	H7P
●	●	☼	●	●	●	●

- Access monitoring mode

Push BS1 one time to change to monitoring mode (H1P is blinking).

H1P	H2P	H3P	H4P	H5P	H6P	H7P
◑	●	●	●	●	●	●

- Access mode 2

Push BS1 for at least 5 seconds (H1P is ON):

H1P	H2P	H3P	H4P	H5P	H6P	H7P
☼	●	●	●	●	●	●

INFORMATION

If you get confused in the middle of the process, push BS1. Then it returns to idle situation.

Mode 1

Mode 1 is used to set basic settings and to monitor the status of the unit (page 33).

- Changing and access the setting in mode 1:
  Once mode 1 is selected (push BS1 one time, H1P is OFF), you can select the desired setting. It is done by pushing BS2. Accessing the selected setting's value is done by pushing BS3 one time.
- To quit and return to the initial status, press BS1.

Monitoring Mode

Monitoring mode is used to monitor the status of the unit (page 33).

- Access the setting in monitoring mode:
  Once monitoring mode is selected (push BS1 one time, H1P is blinking), you can select the desired setting. It is done by pushing BS2. Accessing the selected setting's value is done by pushing BS3 one time.
- To quit and return to the initial status, press BS1.

INFORMATION

Changing between Mode 1 and Monitoring Mode is done by pushing BS1.

Example:

Checking the content of parameter [M-5] (to know how many indoor units are connected to the system).

[A-B]=C in this case defined as: A=M; B=5; C=the value we want to know/monitor:

- Make sure the LED indication is as during normal operation (default situation when shipped from factory).
- Push BS1 to select monitoring mode (H1P blinking)
- Push BS2 5 times; resulting LED indication:

H1P	H2P	H3P	H4P	H5P	H6P	H7P
◐	●	●	●	◐	●	◐

- Push BS3 one time; the value which is returned (depending on the actual field situation), is the amount of indoor units which are connected to the system.

Result: Monitoring mode setting 5 is addressed and selected; the returned value is monitored information. The actual amount needs to be calculated as indicated below.

	H1P	H2P	H3P	H4P	H5P	H6P	H7P
Displaying the number of connected indoor units	◐	●	◐	●	◐	◐	●
		32	16	8	4	2	1

Calculate the number of connected indoor units by adding the values of all (H2P~H7P) blinking (◐) LEDs together.
In this example: 16+4+2=22 units

- To leave the monitoring function, push BS1 one time; you will return to the default situation when shipped from factory.

Mode 2

Mode 2 is used to set field settings of the outdoor unit and system.

- Changing and access the setting in mode 2:
  Once mode 2 is selected (push BS1 for more than 5 seconds), you can select the desired setting. It is done by pushing BS2.

Accessing the selected setting's value is done by pushing BS3 1 time.

- To quit and return to the initial status, press BS1.
- Changing the value of the selected setting in mode 2:
  - Once mode 2 is selected (push BS1 for more than 5 seconds) you can select the desired setting. It is done by pushing BS2.
  - Accessing the selected setting's value is done by pushing BS3 one time.
  - Now BS2 is used to select the required value of the selected setting.
  - When the required value is selected, you can define the change of value by pushing BS3 one time.
  - Press BS3 again to start operation according to the chosen value.

Example:

Checking the content of parameter [2-51] (define the heating comfort setting).

[A-B]=C in this case defined as: A=2; B=51; C=the value we want to know/change

- Make sure the LED indication is as during normal operation (default situation when shipped from factory).
- Push BS1 for over 5 seconds; resulting LED indication:

H1P	H2P	H3P	H4P	H5P	H6P	H7P
☼	●	●	●	●	●	●

- Push BS2 51 times; resulting LED indication:

H1P	H2P	H3P	H4P	H5P	H6P	H7P
☼	◐	◐	●	●	◐	◐
	32	16	8	4	2	1

- Push BS3 one time; the value which is returned (depending on the actual field situation), is the status of the setting. In the case of [2-51], default value is "1", which means the "Mild" comfort setting is used.

Result: mode 2 setting 51 is addressed and selected; the returned value is the current setting situation.

- To change the value of the setting, push BS2 till the required value appears on the LED indication. When achieved, define the setting value by pushing BS3 one time. To start operation according to the chosen setting, confirm again by pushing BS3.
- To leave the monitoring function, push BS1 2 times; you will return to the default situation when shipped from factory.

15.2.2 Operating the DIP switches

By operating the DIP switches it is possible to

	What to do with DIP switch DS1
1	COOL/HEAT selector (refer to the manual of the cool/heat selector switch) OFF=not installed=factory setting
2-4	NOT USED DO NOT CHANGE THE FACTORY SETTING
	What to do with DIP switch DS2/DS3
1-4	NOT USED DO NOT CHANGE THE FACTORY SETTING

INFORMATION

For details on how to operate or connect the COOL/HEAT selector: see installation manual of the COOL/HEAT selector and the wiring diagram.

COOL/HEAT selector function should only be used in case the unit is used as heat pump system.

16. Charging refrigerant

16.1. Precautions

NOTICE

- Refrigerant cannot be charged until field wiring has been completed.
- Refrigerant may only be charged after performing the leak test and the vacuum drying.
- When charging a system, care shall be taken that its maximum permissible charge is never exceeded, in view of the danger of liquid hammer.
- Charging with an unsuitable substance may cause explosions and accidents, so always ensure that the appropriate refrigerant (R410A) is charged.
- Refrigerant containers shall be opened slowly.
- Always use protective gloves and protect your eyes when charging refrigerant.
- When the refrigerant system is to be opened, refrigerant must be treated according to the applicable legislation.

DANGER: ELECTRICAL SHOCK

See page 2.

- To avoid compressor breakdown, do not charge the refrigerant more than the specified amount.
- This outdoor unit is factory charged with refrigerant and depending on pipe sizes and pipe lengths, some systems require additional charging of refrigerant (see "16.3. Calculating the additional refrigerant charge" on page 31).

16.2. Important information regarding the refrigerant used

This product contains fluorinated greenhouse gases. Do not vent gases into the atmosphere.

Refrigerant type: R410A

GWP(1) value: 2087,5

(1) GWP=global warming potential

Please fill in with indelible ink:

- ① the factory refrigerant charge of the product,
- ② the additional refrigerant amount charged in the field and,
- ①+② the total refrigerant charge

on the fluorinated greenhouse gases label supplied with the product. The filled out label must be adhered on the inside of the product and in the proximity of the product charging port (e.g., on the inside of the service cover).

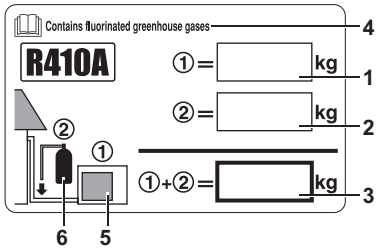

1 Factory refrigerant charge of the product: see unit name plate
2 Additional refrigerant amount charged in the field
3 Total refrigerant charge
4 Contains fluorinated greenhouse gases
5 Outdoor unit
6 Refrigerant cylinder and manifold for charging

INFORMATION

National implementation of EU regulation on certain fluorinated greenhouse gases may require to provide the appropriate official national language on the unit. Therefore, an additional multilingual fluorinated greenhouse gases label is supplied with the unit.

Sticking instructions are illustrated on the backside of that label.

16.3. Calculating the additional refrigerant charge

NOTICE

The refrigerant charge of the system must be less than 100 kg. This means that in case the calculated total refrigerant charge is equal to or more than 95 kg, you must divide your multi outdoor unit system into smaller independent systems, each containing less than 95 kg refrigerant charge. For factory charge, refer to the unit nameplate.

16.3.1 How to calculate the additional refrigerant to be charged

Additional refrigerant to be charged = R (kg). R should be rounded off in units of 0.1 kg.

R= [(X_1 x **Ø22.2**) x 0.37 + (X_2 x **Ø19.1**) x 0.26 + (X_3 x **Ø15.9**) x 0.18 + (X_4 x **Ø12.7**) x 0.12 + (X_5 x **Ø9.5**) x 0.059 + (X_6 x **Ø6.4**) x 0.022] + A

$X_{1...6}$= Total length (m) of liquid piping size at **Øa**

A parameter (kg)	Heat pump system	Heat recovery system
8~10 HP	3 kg	4 kg
16~20 HP	4.5 kg	6.5 kg
24~30 HP	6 kg	9 kg

When using metric piping, please take into account following table concerning the weight factor to be allocated. It should be substituted in the formula for R.

Inch piping size (Ø) (mm)	Weight factor	Metric piping size (Ø) (mm)	Weight factor
6.4	0.022	6	0.018
9.52	0.059	10	0.065
12.7	0.12	12	0.097
15.9	0.18	15	0.16
		16	0.18
19.1	0.26	18	0.24

Inch piping size (Ø) (mm)	Weight factor	Metric piping size (Ø) (mm)	Weight factor
22.2	0.37	22	0.35

When selecting indoor units, the connection ratio (CR) has to be kept within limitations: 50%≤CR≤130%.

More detailed information can be found in the technical engineering data.

16.4. Method for adding refrigerant

Be sure to charge the specified amount of refrigerant in liquid state. Since this refrigerant is a mixed refrigerant, adding it in gas form may cause the refrigerant composition to change, preventing normal operation.

1. Before charging, check whether the refrigerant cylinder is equipped with a siphon tube or not.

Charge the liquid refrigerant with the cylinder in upright position.

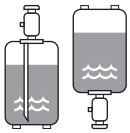

Charge the liquid refrigerant with the cylinder in upside-down position.

2. Be sure to use tools exclusively for R410A to ensure required pressure resistance and to prevent foreign materials from mixing into the system.

NOTICE

Charging with an unsuitable substance may cause explosions and accidents, so always make sure that the appropriate refrigerant (R410A) is charged. Refrigerant containers must be opened slowly.

CAUTION

- When charging a system, charging over the permissible quantity can cause liquid hammer.
- Always use protective gloves and protect your eyes when charging refrigerant.
- When the refrigerant charging procedure is done or when pausing, close the valve of the refrigerant tank immediately. If the tank is left with the valve open, the amount of refrigerant which is properly charged may get off point. More refrigerant may be charged by any remaining pressure after the unit has stopped.

NOTICE

- If the power of some units is turned off, the charging procedure cannot be finished properly.
- In case of a multi outdoor unit system, turn on the power of all outdoor units.
- Make sure to turn ON the power 6 hours before starting the operation. This is necessary to warm the crankcase by the electric heater.
- If operation is performed within 12 minutes after the indoor and outdoor units are turned on, the compressor will not operate before the communication is established in a correct way between outdoor unit(s) and indoor units.
- Before starting charging procedures, check if the LED indication on the outdoor unit A1P PCB is as normal (see "15.2. Operating the push buttons and DIP switches on the logic board" on page 29). If a malfunction code is present, see "18.2. Malfunction code list" on page 41.
- Make sure all connected indoor units are recognised (see "17.2. Monitoring function and field settings" on page 33).

NOTICE

In case of maintenance and the system (outdoor unit+field piping+indoor units) does not contain any refrigerant any more (e.g., after refrigerant reclaim operation), the unit has to be charged with its original amount of refrigerant (refer to the nameplate on the unit) by pre-charging before the automatic charging function can be started.

A. Additional refrigerant charge procedure by normal way

3. After the vacuming drying is finished, charge the additional refrigerant in liquid state through the stop valve service port. Check if gas and liquid stop valves are closed.
   If the total amount can not be charged, follow the additional refrigerant charge procedure (B) shown below.

Heat pump system (2-pipe)

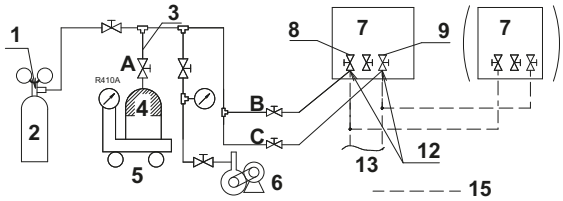

Heat recovery system (3-pipe)

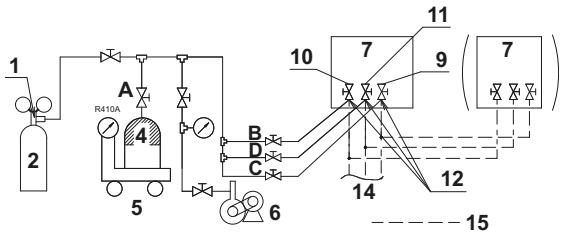

1 Pressure reducing valve
2 Nitrogen
3 Charge hose
4 Refrigerant R410A tank (siphon system)
5 Measuring instrument
6 Vacuum pump
7 Outdoor unit
8 Gas line stop valve
9 Liquid line stop valve (in case of heat pump system): HP/LP
10 HP/LP gas line stop valve
11 Suction gas line stop valve (in case of heat recovery system)
12 Stop valve service port (in case of heat recovery system)
13 To indoor unit
14 To indoor unit/BS unit
15 Field piping
A Valve A
B Valve B
C Valve C
D Valve D

B. Additional refrigerant charge procedure by additional refrigerant charge operation

Refer to page 35 for more information about the system settings for additional refrigerant charge operation.

1 Turn on the power supply of the system (indoor and outdoor unit(s)).

2 Make sure the pump is operational and water circulation is possible.

3 Open the valves in accordance with the below table.

Which valves?	State of valves
State of valves A, B, C and D and stop valves	
Valve A	Open
Valve B	Closed
Valve C	Open
Valve D	Closed

Which valves?	State of valves
Liquid stop valve	Open
Suction gas stop valve	Open[(a)]
HP/LP stop valve	Open

(a) In case of heat recovery system only! In case of heat pump system, this valve always stays closed!

4 After ten minutes, fully close the liquid line stop valve C and then, open valve C by turning it open 180° only (do not turn it open fully).

5 Start the additional refrigerant charge operation, setting [2-20]= ON.
If it is difficult to charge the refrigerant additionally, decrease the water temperature or warm the refrigerant tank.
(Warm the refrigerant tank with hot water of maximum 40°C.)

6 After the system is charged with a specified amount of refrigerant, press the RETURN button (BS3) on the PC board (A1P) in the outdoor unit to stop the additional refrigerant charge operation.

INFORMATION

The additional refrigerant charge operation will automatically stop after 30 minutes.

If charging is not completed after 30 minutes, perform the additional charging procedure again.

7 After the refrigerant charge hose is removed, immediately fully open the liquid-side stop valve C.
(Otherwise, liquid seal may cause the pipe to burst.)

NOTICE

If the additional refrigerant charge operation stops immediately, there is a possibility that the unit was overcharged. In such a case, check the refrigerant volume again.

NOTICE

Make sure to open all stop valves after charging refrigerant.

Perform the test procedure as explained in "18. Test operation" on page 40.

17. Start-up and configuration

INFORMATION

It is important that all information in this chapter is read sequentially by the installer and that the system is configured as applicable.

DANGER: Electrical shock

See "2. General safety precautions" on page 2.

17.1. Checks before initial start up

After the installation of the unit, first check the following items. Once all below checks are fulfilled, the unit must be closed, only then can the unit be powered up.

1 Installation
Check that the unit is properly installed, to avoid abnormal noises and vibrations when starting up the unit.

2 Field wiring
Be sure that the field wiring has been carried out according to the instructions described in the chapter "14. Electrical wiring work" on page 22, according to the wiring diagrams and according to the applicable legislation.

3 Power supply voltage
Check the power supply voltage on the local supply panel. The voltage must correspond to the voltage on the identification label of the unit.

4 Earth wiring
Be sure that the earth wires have been connected properly and that the earth terminals are tightened.

5 Insulation test of the main power circuit
Using a megatester for 500 V, check that the insulation resistance of 2 MΩ or more is attained by applying a voltage of 500 V DC between power terminals and earth. Never use the megatester for the transmission wiring.

6 Fuses, circuit breakers, or protection devices
Check that the fuses, circuit breakers, or the locally installed protection devices are of the size and type specified in the chapter "14. Electrical wiring work" on page 22. Be sure that neither a fuse nor a protection device has been bypassed.

7 Internal wiring
Visually check the electrical component box and the inside of the unit on loose connections for damaged electrical components.

8 Pipe size and pipe insulation
Be sure that correct pipe sizes are installed and that the insulation work is properly executed.

9 Stop valves
Be sure that the stop valves are open on liquid and suction gas side and HP/LP gas. (Leave the suction gas valve closed in case of heat pump system.)

10 Damaged equipment
Check the inside of the unit for damaged components or squeezed pipes.

11 Refrigerant leak
Check the inside of the unit on refrigerant leakage. If there is a refrigerant leak, try to repair the leak. If the repair is unsuccessful, call your local dealer. Do not touch any refrigerant which has leaked out from refrigerant piping connections. This may result in frostbite.

12 Oil leak
Check the compressor for oil leakage. If there is an oil leak, try to repair the leak. If the repairing is unsuccessful, call your local dealer.

13 Air inlet/outlet
Check that the air inlet and outlet of the unit is not obstructed by paper sheets, cardboard, or any other material.

14 Additional refrigerant charge
The amount of refrigerant to be added to the unit shall be written on the included "Added refrigerant" plate and attached to the rear side of the front cover.

15 Installation date and field setting
Be sure to keep record of the installation date on the sticker on the rear of the upper front panel according to EN60335-2-40 and keep record of the contents of the field setting(s).

17.2. Monitoring function and field settings

The operation of the outdoor unit can further be defined by changing some field settings. Next to making field settings it is also possible to confirm the current operation parameters of the unit.

Below relevant Monitoring mode, mode 1 and field setting mode (mode 2) settings are explained in detail. How to access them, how to change the value of the settings and how to confirm them is explained in "15. Making field settings" on page 28. In that chapter, an example is given on how to make a setting. It is advised to check this procedure before accessing, checking and changing below settings.

Once the default situation of the LED indication is confirmed (see "15. Making field settings" on page 28), the monitoring mode, mode 1 and mode 2 can be accessed.

Making settings is done via the master outdoor unit, not through slave unit(s).

INFORMATION

The values of the settings which are given below are the **decimal** values.

The unit will indicate the binary translation using LEDs.

Field setting: [A-B]=C

The parameters B and C have to be regarded as binary when displayed on the unit.

H2P	H3P	H4P	H5P	H6P	H7P
●	●	●	●	●	●
32	16	8	4	2	1

The decimal value is the sum of all corresponding decimal values of the lit LED(s).

Example:

H2P	H3P	H4P	H5P	H6P	H7P
●	☼	●	☼	●	☼
32	16	8	4	2	1

Decimal value = 0x32 + 1x16 + 0x8 + 1x4 + 0x2 + 1x1 = 21

17.2.1 Mode 1 and Monitoring mode

Mode 1 can be used to define some setting parameters. Monitor mode can monitor the current situation of the outdoor unit / system. Some field setting contents can be monitored as well.

Below the monitor mode parameters and settings in mode 1 are explained.

Monitor mode (H1P is blinking)

[M-5]= shows the total number of connected indoor units

It can be convenient to check if the total number of indoor units which are installed match the total number of indoor units which are recognized by the system. In case there is a mismatch, it is advised to check the communication wiring path between outdoor and indoor units (F1/F2 communication line).

[M-6]= shows the total number of BS boxes connected to the outdoor unit (only in case of system use as heat recovery)

[M-8]= shows the total number of connected outdoor units (in case of multi outdoor unit system)

It can be convenient to check if the total number of outdoor units which are installed matches the total number of outdoor units which are recognized by the system. In case there is a mismatch, it is advised to check the communication wiring path between outdoor and outdoor units (Q1/Q2 communication line).

[M-14]= shows the latest malfunction code

[M-15]= shows the 2nd last malfunction code

[M-16]= shows the 3rd last malfunction code

When the latest malfunction codes were reset by accident on an indoor unit user interface, they can be checked again through this monitoring settings. For the content or reason behind the malfunction code see "18.2. Malfunction code list" on page 41, where most relevant malfunction codes are explained. Detailed information about malfunction codes can be consulted in the service manual of this unit.

INFORMATION

- If a malfunction situation occurs, H2P will be lit.
- If demand operation is active, H7P will be lit.

Mode 1 setting (H1P is OFF)

[1-0]= Cool/Heat selection setting (only for heat pump system)

Cool/Heat selection setting is used in case the optional Cool/Heat selector (KRC19-26A and BRP2A81) is used. Depending on the outdoor unit setup (single outdoor unit setup or multi outdoor unit setup), the correct setting should be chosen. More details on how to use the Cool/Heat selector option can be found in the manual of the Cool/Heat selector.

Default value=16.

- 16=Each individual outdoor unit can select Cool/Heat operation (by Cool/Heat selector if installed), or by defining master indoor user interface.
- 8=Master unit decides Cool/Heat operation when outdoor units are connected in a multi outdoor unit system combination[(a)]
- 4=Slave unit for Cool/Heat operation when outdoor units are connected in a multi outdoor unit system combination[(a)]

Change [1-0]=16, 8 or 4 in function of required functionality.

	H1P	H2P	H3P	H4P	H5P	H6P	H7P
[1-0]=16	●	●	◐	●	●	●	●
[1-0]=8	●	●	●	◐	●	●	●
[1-0]=4	●	●	●	●	◐	●	●

When you change setting [1-0], the default status will change depending on the selected setting:

H1P	H2P	H3P	H4P	H5P	H6P	H7P
●	●	☼	●	●	●	●
●	●	●	☼	●	●	●
●	●	●	●	☼	●	●

(a) It is necessary to use the optional external control adaptor for outdoor unit (DTA104A61/62). See the instruction delivered with the adaptor for further details.

17.3. Mode 2

Mode 2 is used to change the field settings of the system. Consulting the current field setting value and changing the current field setting value is possible.

In general, normal operation can be resumed without special intervention after changing field settings.

Some field settings are used for special operation (e.g., one time operation for performing specific checks, recovery/vacuuming setting, adding refrigerant setting, etc.). In such a case, it is required to abort the special operation before normal operation can restart. It will be indicated in below explanations.

[2-8]= Te target temperature during cooling operation

Default value=5

Value [2-8]	T_e target (°C)
2	6
3	7
4	8
5	9 (default)
6	10
7	11

Change [2-8]=2~7 in function of required operation method during cooling.

For more information and advice about the impact of these settings, see "17.4. Energy saving and optimum operation" on page 37.

[2-9]= Tc target temperature during heating operation

Default value=3

Value [2-9]	T_c target (°C)
1	41
3	43
6	46

Change [2-9]=1, 3 or 6 in function of required operation method during heating.

For more information and advice about the impact of these settings, see "17.4. Energy saving and optimum operation" on page 37.

[2-12]= Enable the power consumption limitation via external control adaptor (DTA104A61/62)

If the system needs to be running under power consumption limitation conditions when an external signal is sent to the unit, this setting should be changed. This setting will only be effective when the optional external control adaptor (DTA104A61/62) is installed.

Default value=1 (OFF).

To activate this function change [2-12]=2 (ON).

	H1P	H2P	H3P	H4P	H5P	H6P	H7P
ON	☼	●	●	●	●	◐	●
OFF	☼	●	●	●	●	●	◐

[2-20]= Manual additional refrigerant charge

Further instructions regarding the different ways to charge additional refrigerant into your system can be found in "16. Charging refrigerant" on page 31.

Default value=1 (OFF).

To activate this function change [2-20]=2 (ON).

	H1P	H2P	H3P	H4P	H5P	H6P	H7P
ON	☼	●	●	●	●	◐	●
OFF	☼	●	●	●	●	●	◐

To stop the manual additional refrigerant charge operation (when the required additional refrigerant amount is charged), push BS3. If this function was not aborted by pushing BS3, the unit will stop its operation after 30 minutes. If 30 minutes was not sufficient to add the needed refrigerant amount, the function can be reactivated by changing the field setting again.

[2-21]= Refrigerant recovery/vacuuming mode

In order to achieve a free pathway to reclaim refrigerant out of the system or to remove residual substances or to vacuum the system it is necessary to apply a setting which will open required valves in the refrigerant circuit so the reclaim of refrigerant or vacuuming process can be done properly.

Default value=1 (OFF).

To activate function change [2-21]=2 (ON).

	H1P	H2P	H3P	H4P	H5P	H6P	H7P
ON	☼	●	●	●	●	◐	●
OFF	☼	●	●	●	●	●	◐

To stop the refrigerant recovery/vacuuming mode, push BS3. If BS3 is not pushed, the system will remain in refrigerant recovery/vacuuming mode.

[2-26]= Interlock (open) feedback on user interface

This setting is used to define whether you want to receive feedback of the interlock or not. Indication is by displaying a malfunction code on the user interface. On top of that, the delay time by when a malfunction code is displayed on the user interface is selectable.

Default value=0 (no feedback, no malfunction code on the user interface).

Change [2-26]=0, 1, 2, 3, 4, 5, 6 or 7 in function of the required delay. In case a delay time is selected, the malfunction will be indicated on the user interface.

Value [2-26]	Delay time (minutes) before malfunction is displayed on user interface
0	No feedback (default)
1	5
2	10
3	15
4	20
5	25
6	30
7	35

INFORMATION

Even though no feedback is set ([2-26]=0), when the interlock is open, the unit will go to forced thermo OFF conditions. See "14.6.4 Setting the interlock circuit and pump operation output" on page 28 for more information.

[2-30]= Power consumption limitation level (step 1) via the external control adaptor (DTA104A61/62)

If the system needs to be running under power consumption limitation conditions when an external signal is sent to the unit, this setting defines the level power consumption limitation that will be applied for step1. The level is according to the table.

Default value=2.

Change [2-30]=1, 2, or 4 in function of required limitation.

Value [2-30]	Power consumption limitation (approximately)
1	Level1: 60%
2	Level2: 70% (default)
4	Level3: 80%

[2-31]= Power consumption limitation level (step 2) via the external control adaptor (DTA104A61/62)

If the system needs to be running under power consumption limitation conditions when an external signal is sent to the unit, this setting defines the level power consumption limitation that will be applied for step2. The level is according to the table.

Value [2-31]	Power consumption limitation (approximately)
1	Level1: 30%
2	Level2: 40% (default)
4	Level3: 50%

[2-32]= Forced, all time, power consumption limitation operation (no external control adaptor is required to perform power consumption limitation)

If the system always needs to be running under power consumption limitation conditions, this setting activates and defines the level power consumption limitation that will be applied continuously. The level is according to the table.

Default value=1 (OFF).

Value [2-32]	Restriction reference
1	Function not active (default)
2	Follows [2-30] setting
4	Follows [2-31] setting

Change [2-32]=1, 2 or 4 in function of required limitation.

[2-49]= T_e target temperature during heat recovery operation (only for heat recovery system)

Default value=5

Value [2-49]	T_e target (°C)
2	6
3	7
4	8
5	9 (default)
6	10
7	11

Change [2-49]=2~7 in function of required operation method during cooling.

For more information and advice about the impact of these settings, see "17.4. Energy saving and optimum operation" on page 37.

[2-51]= Cooling comfort setting

Default value=1

Value [2-51]	Cooling comfort
0	Eco
1	Mild (default)
2	Quick
3	Powerful

Change [2-51]=0, 1, 2 or 3 in function of required limitation.

This setting is used in conjunction with setting [2-8].

For more information and advice about the impact of these settings, see "17.4. Energy saving and optimum operation" on page 37.

[2-52]= Heating comfort setting

Default value=1

Value [2-52]	Heating comfort
0	Eco
1	Mild (default)
2	Quick
3	Powerful

Change [2-52]=0, 1, 2 or 3 in function of required limitation.

This setting is used in conjunction with setting [2-9].

For more information and advice about the impact of these settings, see "17.4. Energy saving and optimum operation" on page 37.

[2-58]= Brine type setting

By changing this setting, you can extend the operation range on the brine side of the unit.

- Normal operation range on brine side (default): This operation range is for use with water as heat source medium.
- Extended operation range on brine side: This operation range is for use with brine as heat source medium.

NOTICE

By changing this setting to extended operation type, you have to use glycol (40%) in the heat source medium to avoid freeze up of the brine circuit or unit itself (cf operation range). Do not use water in this case!

Value [2-58]	Brine type setting
0	No Brine: water (default) Extended range impossible
3	Use Brine: glycol (40%) Extended range possible

17.4. Energy saving and optimum operation

This VRV IV water cooled system is equipped with advanced energy saving functionality. Depending on the priority, emphasises can be put on energy saving or comfort level. Several parameters can be selected, resulting in the optimal balance between energy consumption and comfort for the particular application.

Several patterns are available and explained below. Modify the parameters to the needs of your building and to realize the best balance between energy consumption and comfort.

17.4.1 Two main operation methods are available:

- **Automatic**
  The refrigerant temperature is set by default to a certain start value (defined by field setting). Depending on the load of the indoor units, the refrigerant temperature is adjusted. When there is a big/small load, according behaviour to match this load is executed.
  Depending on the operation mode (cooling, heating or heat recovery), field settings are available to define the standard refrigerant temperature start point. They are explained below.
  E.g., when your system is operating in cooling, you do not need as much cooling under low outdoor ambient temperatures (e.g., 25°C) as under high outdoor ambient temperatures (e.g., 35°C). Using this idea, the system automatically starts increasing its refrigerant temperature, automatically reducing the delivered capacity and increasing the system's efficiency based on indoor unit load feedback.
  - To define the start value during cooling operation, change field setting [2-8]=5 (default; corresponding to T_e=9°C) to the required value.

  E.g., when your system is operating in heating, you do not need as much heating under high outdoor ambient temperatures (e.g., 15°C) as under low outdoor ambient temperatures (e.g., –5°C). Using this idea, the system automatically starts decreasing its refrigerant temperature, automatically reducing the delivered capacity and increasing the system's efficiency.
  - To define the start value for cooling operation during heat recovery operation, change field setting [2-9]=3 (default; corresponding to T_c=43°C) to the required value.

  When the system is used as a heat recovery system, the start refrigerant temperature during heat recovery mode for cooling can be selected differently than during cooling operation.
  - To define the start value for cooling operation during heat recovery operation, change field setting [2-49]=5 (default; corresponding to T_c=50°C) to the required value.
- **Hi-sensible/economic (cooling/heating)**
  The refrigerant temperature is set higher/lower (cooling/heating) compared to normal operation. The focus under high sensible mode is comfort feeling for the customer.
  The selection method of indoor units is important and has to be considered as the available capacity is not the same as under basic operation. For details concerning Hi-sensible applications, please contact your dealer.
  - To activate this setting under cooling operation: change field setting [2-8] to the appropriate value, matching the requirements of the pre-designed system containing a high sensible solution.

Value [2-8]	T_e target (°C)
3	7
4	8
5	9
6	10
7	11

  - To activate this setting under heating operation: change field setting [2-9] to the appropriate value, matching the requirements of the pre-designed system containing a high sensible solution.

Value [2-9]	T_c target (°C)
1	41
3	43

  To maintain the target settings, it is required to set the comfort setting to Eco.
  The comfort modes are explained below.

17.4.2 Several comfort settings are available

For each of above modes a comfort level can be selected. The comfort level is related to the timing and the effort (energy consumption) which is put in achieving a certain room temperature by temporarily changing the refrigerant temperature to different values in order to achieve requested conditions more quickly.

- **Powerful**
  Overshoot (during heating operation) or undershoot (during cooling operation) is allowed compared to the requested refrigerant temperature, in order to achieve the required room temperature very fast. The overshoot is allowed from the start up moment.
  In case of cooling operation the evaporating temperature is allowed to go down to 3°C on temporary base depending on the situation.
  In case of heating operation the condense temperature is allowed to go up to 49°C on temporary base depending on the situation.
  When the request from the indoor units becomes more moderate, the system will eventually go to the steady state condition which is defined by the operation method above.
  - To activate the powerful comfort setting under cooling operation, change field setting [2-51]=3.
    This setting is used in conjunction with setting [2-8].
  - To activate the powerful comfort setting under heating operation, change field setting [2-52]=3.
    This setting is used in conjunction with setting [2-9].
- **Quick**
  Overshoot (during heating operation) or undershoot (during cooling operation) is allowed compared to the requested refrigerant temperature, in order to achieve the required room temperature very fast. The overshoot is allowed from the start up moment.
  In case of cooling operation the evaporating temperature is allowed to go down to 6°C on temporary base depending on the situation.
  In case of heating operation the condense temperature is allowed to go up to 46°C on temporary base depending on the situation.
  When the request from the indoor units becomes more moderate, the system will eventually go to the steady state condition which is defined by the operation method above.
  - To activate the quick comfort setting under cooling operation, change field setting [2-51]=2.
    This setting is used in conjunction with setting [2-8].
  - To activate the quick comfort setting under heating operation, change field setting [2-52]=2.
    This setting is used in conjunction with setting [2-9].

- **Mild**

  Overshoot (during heating operation) or undershoot (during cooling operation) is allowed compared to the requested refrigerant temperature, in order to achieve the required room temperature very fast. The overshoot is not allowed from the start up moment. The start up occurs under the condition which is defined by the operation mode above.

  In case of cooling operation the evaporating temperature is allowed to go down to 6°C on temporary base depending on the situation.

  In case of heating operation the condense temperature is allowed to go up to 46°C on temporary base depending on the situation.

  When the request from the indoor units becomes more moderate, the system will eventually go to the steady state condition which is defined by the operation method above.

  The start up condition is different from the powerful and quick comfort setting.

  - To activate the mild comfort setting under cooling operation, change field setting [2-51]=1.

    This setting is used in conjunction with setting [2-8].
  - To activate the mild comfort setting under heating operation, change field setting [2-52]=1.

    This setting is used in conjunction with setting [2-9].

- **Eco**

  The original refrigerant temperature target, which is defined by the operation method (see above) is kept without any correction, unless for protection control.

  - To activate the mild comfort setting under cooling operation, change field setting [2-51]=0.

    This setting is used in conjunction with setting [2-8].
  - To activate the mild comfort setting under heating operation, change field setting [2-52]=0.

    This setting is used in conjunction with setting [2-9].

Example: Automatic mode during cooling

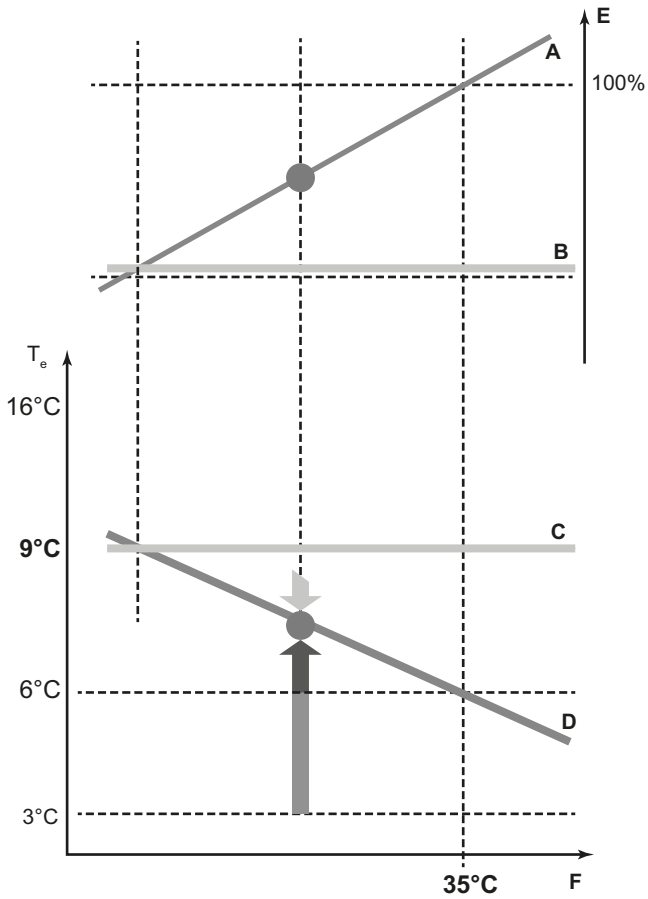

A Actual load curve
B Initial capacity automatic operation mode (fixed T_e)
C Initial T_e value in automatic operation mode
D Required value
E Load factor
F Outside air temperature
T_e Evaporating temperature
Quick
Powerful
Mild

The initial T_e value goes up/down depending on indoor unit load. The method is defined by the Comfort mode.

Room temperature evolution:

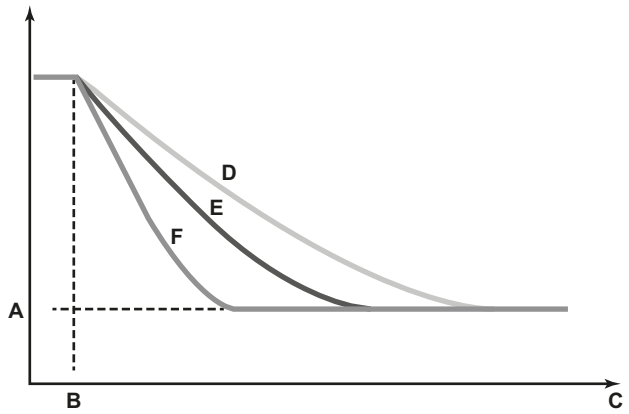

A Set room temperature
B Operation start
C Operation time
D Mild
E Quick
F Powerful

Example: Automatic mode during heating

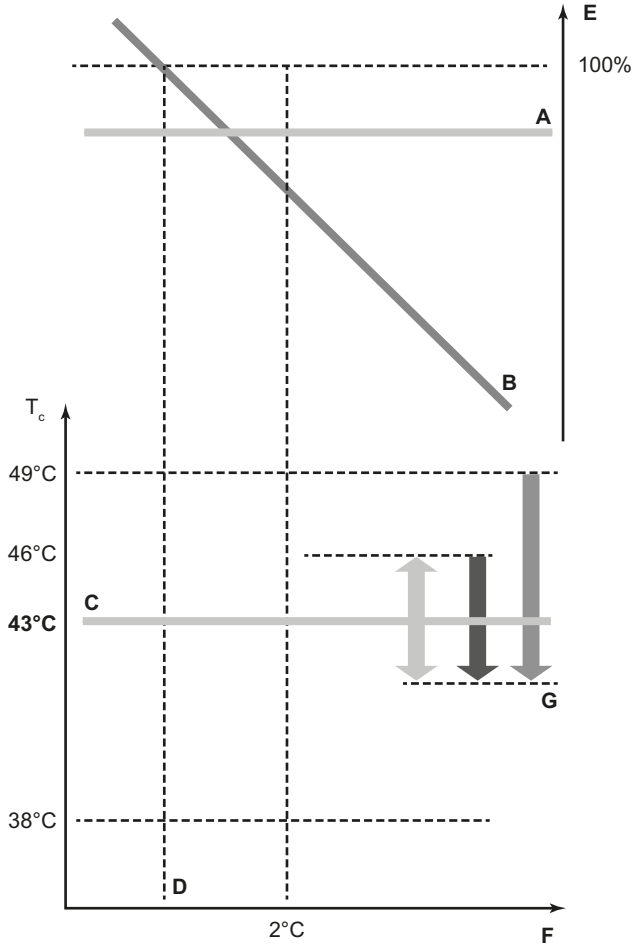

A Default automatic mode peak capacity
B Load curve
C Initial T_c value in automatic operation mode
D Design temperature
E Load factor
F Outside air temperature
G Balance point (depending on the load)
T_c Condensing temperature
Quick
Powerful
Mild

The initial T_c value goes up/down depending on indoor unit load. The method is defined by the Comfort mode.

Room temperature evolution:

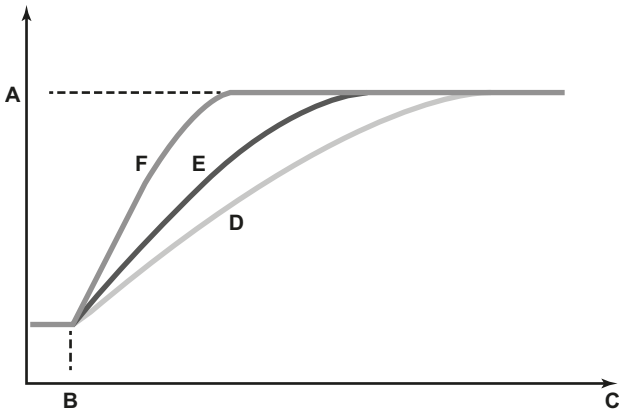

A Set room temperature
B Operation start
C Operation time
D Mild
E Quick
F Powerful

No matter which control is selected, variations on the behaviour of the system are still possible due to protection controls to keep the unit operating under reliable conditions. The intentional target, however, is fixed and will be used to obtain the best balance between energy consumption and comfort, depending on the application type.

18. Test operation

After installation and once the field settings are defined, the installer is obliged to verify correct operation. Therefore a test run must be performed according to the procedures described below.

18.1. Test operation

18.1.1 Precautions before starting test operation

During test operation, the outdoor unit and the indoor units will start up:

- Make sure that the preparations of all indoor units are finished (field piping, electrical wiring, ...). See installation manual of the indoor units for details.
- Make sure that the source water pump is operating. Make sure that all air in the water circuit is evacuated and the water can circulate with appropriate flow rate.
- Make sure that the interlock circuit is connected. The unit cannot operate if there is no connection.

CAUTION

Do not perform the test operation while working on the indoor units.

When performing the test operation, not only the outdoor unit, but the connected indoor unit will operate as well. Working on an indoor unit while performing a test operation is dangerous.

CAUTION

- During tests never pressurize the appliances with a pressure higher than the maximum allowable pressure (as indicated on the nameplate of the unit).
- If refrigerant gas leaks, ventilate the area immediately. Toxic gas may be produced if refrigerant gas comes into contact with fire.
- Never directly touch any accidental leaking refrigerant. This could result in severe wounds caused by frostbite.
- Test run is possible for heat source water temperatures between 10°C and 45°C.

DANGER: Do not touch piping and internal parts.

See "2. General safety precautions" on page 2.

DANGER: Electrical shock

See "2. General safety precautions" on page 2.

- Provide a logbook and machine card.
  In accordance with the applicable legislation, it may be necessary to provide a logbook with the equipment containing at least: info on maintenance, repair work, results of tests, stand-by periods, …

INFORMATION

Note that during the first running period of the unit, required power input may be higher. This phenomenon originates from the compressor that requires a 50 hour run elapse before reaching smooth operation and stable power consumption. Reason is that the scroll is made out of iron and that it takes some time to smooth the surfaces that make contact.

NOTICE

To protect the compressor, be sure to turn on the power supply 6 hours before starting operation.

18.1.2 Test operation

The procedure below describes the test operation of the complete system. This operation checks and judges following items:

- Check of wrong wiring (communication check with indoor units).
- Check of the stop valves opening.
- Judgement of piping length.
- Check of refrigerant charge.

INFORMATION

The test operation can take up to 30 minutes. The test operation is carried out in cooling mode.

On top of this system test operation, indoor units operation should also be checked separately.

- Make sure to carry out the system test operation after the first installation. Otherwise, the malfunction code U3 will be displayed on the user interface and normal operation or individual indoor unit test run cannot be carried out.
- Abnormalities on indoor units cannot be checked for each unit separately. After the test operation is finished, check the indoor units one by one by performing a normal operation using the user interface. Refer to the indoor unit installation manual for more details concerning the individual test run.

INFORMATION

- It may take 10 minutes to achieve a uniform refrigerant state before the compressor starts.
- During the test operation, the refrigerant running sound or the magnetic sound of a solenoid valve may become loud and the display indication may change. These are not malfunctions.

Procedure

1 Close all front panels (incl. electrical component box) during the test run, in order not to let it be the cause of misjudgment.

2 Make sure all field settings you want are set; see "15. Making field settings" on page 28.

3 Turn ON the power to the outdoor unit and the connected indoor units.

NOTICE

Be sure to turn on the power 6 hours before operation in order to have power running to the crankcase heater and to protect the compressor.

4 Make sure that the pump motor is operating.

5 Make sure that the appropriate stop valves are open.
Heat pump system: HP/LP gas and liquid
Heat recovery system: suction gas, HP/LP gas, liquid

6 Make sure the default (idle) situation is existing. Set to setting mode 1 (H1P= off). Push BS4 for 5 seconds or more. The unit will start test operation.

- The test operation is automatically carried out, the outdoor unit H2P flashes and the indication "Test operation" and "Under centralized control" will display on the user interface of indoor units.
- During the test operation, it is not possible to stop the unit operation from a user interface. To abort the operation, press BS3. The unit will stop after ±1 minute (max. 10 minutes).

7 Check the test operation results on the outdoor unit LED indication.
- Normal completion: ●●☼●●●●
- Abnormal completion: ●☼☼●●●●
Refer to "18.1.3 Correcting after abnormal completion of the test operation" on page 41 to take actions for correcting the abnormality. When the test operation is fully completed, normal operation will be possible after 5 minutes.

18.1.3 Correcting after abnormal completion of the test operation

The test operation is only completed if there is no malfunction code displayed on the user interface. In case of a displayed malfunction code, perform correcting actions as explained in the malfunction code table. Carry out the test operation again and confirm that the abnormality is properly corrected.

INFORMATION

Refer to the installation manual of the indoor unit for other detailed malfunction codes related to indoor units.

18.2. Malfunction code list

In case of a displayed malfunction code, perform correcting actions as explained in the malfunction code table.

After correcting the abnormality, retry operation.

Below table gives an overview of the malfunction codes which may appear.

Remote controller displays malfunction code

Malfunction code	Error	Corrective action
E3 E4 F3 F6 UF U2	The stop valve of an outdoor unit is left closed.	Open the stop valve.
U1	The phases of the power to the outdoor units are reversed.	Exchange two of the three phases (L1, L2, L3) to make a positive phase connection.
U3	The test operation is not completed.	Complete the test operation.
U1 U2 U4	No power is supplied to an outdoor or indoor unit (including phase interruption).	Check if the power wiring for the outdoor units are connected correctly. (If the power wire is not connected to L2 phase, no malfunction display will appear and the compressor will not work.)
UF	Incorrect transmission between units	Check if the refrigerant piping line and the unit transmission wiring are consistent with each other.
E3 F6 UF U2	Refrigerant overcharge	Recalculate the required amount of refrigerant from the piping length and correct the refrigerant charge level by recovering any excessive refrigerant with a refrigerant recovery machine.
E4 F3	Insufficient refrigerant	• Check if the additional refrigerant charge has been finished correctly. • Recalculate the required amount of refrigerant from the piping length and add an adequate amount of refrigerant.
U7 UF	If a multi outdoor unit terminal is connected when only one outdoor unit installed.	Remove the wire from the multi outdoor unit terminal (Q1 and Q2).
UF E4	The operation mode on the remote controller was changed before the check operation.	Set the operation mode on all indoor unit remote controllers to "cooling".
HJ	The heat source water is not circulating.	Make sure that the water pump is running.
E2 E3	E2 or E3 is activated, and pressing the On/Off button on the remote controller does not turn off E2 or E3. In this case, there is a malfunction of the compressor in the outdoor unit.	Measure the insulation resistance of the compressor to check the condition of the compressor.

18.3. Check of normal operation

After the check operation is completed, operate the unit normally. (Heating is not possible if the outdoor temperature is 24°C or higher.) Check the below items.

- Make sure the indoor and outdoor units are operating normally (If a knocking sound can be heard in the liquid compression of the compressor, stop the unit immediately and then energize the heater for a sufficient length of time before restarting the operation.)
- Run each indoor unit one at a time and make sure the corresponding outdoor unit is also running.
- Check if cold (or hot) air is coming out of the indoor unit.
- Press the fan direction and fan strength buttons on the indoor unit to check if they operate properly.

19. Caution for refrigerant leaks

Points to note in connection with refrigerant leaks

19.1. Introduction

The installer and system specialist shall secure safety against leakage according to local regulations or standards. The following standards may be applicable if local regulations are not available.

The VRV System, like other air conditioning systems, uses R410A as refrigerant. R410A itself is an entirely safe non-toxic, non-combustible refrigerant. Nevertheless care must be taken to ensure that air conditioning facilities are installed in a room which is sufficiently large. This assures that the maximum concentration level of refrigerant gas is not exceeded, in the unlikely event of major leak in the system and this in accordance to the local applicable regulations and standards.

19.2. Maximum concentration level

The maximum charge of refrigerant and the calculation of the maximum concentration of refrigerant is directly related to the humanly occupied space in to which it could leak.

The unit of measurement of the concentration is kg/m^3 (the weight in kg of the refrigerant gas in 1 m^3 volume of the occupied space).

Compliance to the local applicable regulations and standards for the maximum allowable concentration level is required.

In Australia the maximum allowed concentration level of refrigerant to a humanly space is limited to 0.35 kg/m^3 for R407C and 0.44 kg/m^3 for R410A.

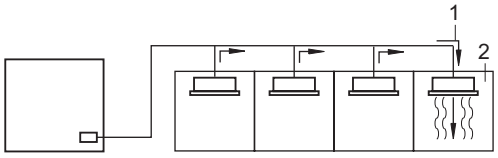

1 Direction of the refrigerant flow
2 Room where refrigerant leak has occurred (outflow of all the refrigerant from the system)

Pay special attention to places, such as a basement, etc., where refrigerant can stay, since refrigerant is heavier than air.

19.3. Procedure for checking maximum concentration

Check the maximum concentration level in accordance with steps 1 to 4 below and take whatever action is necessary to comply.

1. Calculate the amount of refrigerant (kg) charged to each system separately.

amount of refrigerant in a single unit system (amount of refrigerant with which the system is charged before leaving the factory)	+	additional charging amount (amount of refrigerant added locally in accordance with the length or diameter of the refrigerant piping)	=	total amount of refrigerant (kg) in the system

NOTICE

Where a single refrigerant facility is divided into 2 entirely independent refrigerant systems, use the amount of refrigerant with which each separate system is charged.

2. Calculate the smallest room volume (m^3)
In the following cases, calculate the volume of (A), (B) as a single room or as the smallest room.

- Where there are no smaller room divisions

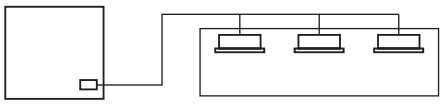

- Where there is a room division but there is an opening between the rooms sufficiently large to permit a free flow of air back and forth.

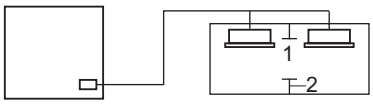

1 Opening between rooms
2 Partition

(Where there is an opening without a door or where there are openings above and below the door which are each equivalent in size to 0.15% or more of the floor area.)

3. Calculating the refrigerant density using the results of the calculations in steps 1 and 2 above.

$$\frac{\text{total volume of refrigerant in the refrigerant system}}{\text{size (m}^3\text{) of smallest room in which there is an indoor unit installed}} \leq \text{maximum concentration level (kg/m}^3\text{)}$$

If the result of the above calculation exceeds the maximum concentration level then make similar calculations for the second then third smallest room and so until the result falls short of the maximum concentration.

4. Dealing with the situations where the result exceeds the maximum concentration level.
Where the installation of a facility results in a concentration in excess of the maximum concentration level then it will be necessary to revise the system. Please consult your Daikin supplier.

20. Maintenance and service

20.1. Maintenance introduction

In order to ensure optimal operation of the unit, a number of checks and inspections should be carried out on the unit at regular intervals, preferably yearly.

This maintenance shall be carried out by the installer or service agent.

20.2. Service precautions

DANGER: Electrical shock

See "2. General safety precautions" on page 2.

CAUTION

When performing service to inverter equipment:

1. Do not open the electrical component box cover for 10 minutes after the power supply is turned off.
2. Measure the voltage between terminals on the terminal block for power supply with a tester and confirm that the power supply is shut off.
   In addition, measure points as shown in the figure below, with a tester and confirm that the voltage of the capacitor in the main circuit is less than 50 V DC.

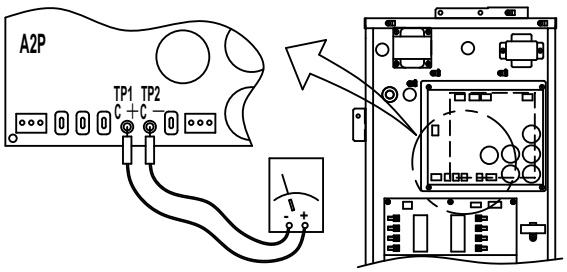

3. To prevent damaging the PC-board, touch a non-coated metal part to eliminate static electricity before pulling out or plugging in connectors.

For details refer to the wiring diagram labelled on the back of the electrical component box cover.

NOTICE

Play it safe. For protection of the PCB, touch the switch box casing by hand in order to eliminate static electricity from your body before performing service.

20.3. Service mode operation

Refrigerant recovery operation/vacuuming operation is possible by applying setting [2-21]. Refer to "Refrigerant recovery/vacuuming mode" on page 35 for details how to set mode 2.

When vacuuming/recovery mode is used, check very carefully what should be vacuumed/recovered before starting. See the installation manual of the indoor unit for more information about vacuuming and recovery.

20.3.1 Vacuuming method

1. When the unit is at standstill, set the unit in [2-21]=1.
2. When confirmed, the indoor and outdoor unit expansion valves will fully open.
   At that moment H1P lights, the user interface of all indoor units indicates TEST (test operation) and (external control), and operation will be prohibited.
3. Evacuate the system with a vacuum pump.
4. Press BS1 to stop vacuuming mode.

20.3.2 Refrigerant recovery operation method

This should be done by a refrigerant reclaimer. Follow the same procedure as for vacuuming method.

21. Disposal requirements

Dismantling of the unit, treatment of the refrigerant, of oil and of other parts must be done in accordance with relevant local and national legislation.

22. Unit specification

INFORMATION

For technical and electrical details of multi outdoor unit combinations, see technical engineering data.

22.1. General technical specifications

		RWEYQ8	RWEYQ10
Casing material		Painted galvanised steel	
Dimensions h x w x d	(mm)	1000x780x550	
Weight	(kg)	137	137
Operation range (water side)			
• cooling (min./max.)	(°C)	10/45	
• heating (min./max.)	(°C)	(a)10/45	
Cooling(b)			
• capacity	(kW)	22.4	28.0
• EER		5.07	4.56
Heating(c)			
• capacity	(kW)	25.0	31.5
• COP		5.94	5.25
PED			
• category		2	
• most critical part		Liquid receiver	
• PS*V	(bar*l)	200	
Maximum number of indoor units connected(d)		64	
Water connection			
• inlet/outlet		External thread ISO228-G1 1/4B	
• drain		Internal thread ISO228-G1/2B	
Heat exchanger			
• type		plate heat exchanger	
• treatment		stainless steel	
Compressor			
• quantity		1	
• model		inverter	
• type		hermetically sealed scroll compressor	
Sound level (nominal)(e)			
• sound power(f)	(dBA)	50	51
• sound pressure(g)	(dBA)	≤70	
Refrigerant			
• type		R410A	
• charge	(kg)	3.5	4.2
Refrigerant oil		Synthetic (ether) oil	
Safety devices		• High pressure switch • Fusible plug • Inverter overload protector • PC board fuse	

(a) The lower limit is extendable till –10°C (heating operation mode) in case the brine type setting is activated. (See "Brine type setting" on page 36)
(b) Nominal cooling capacities are based on indoor temperature 27°C DB and 19°C WB, inlet water temperature 30°C, equivalent refrigerant piping: 7.5 m, level difference: 0 m.

(c) Nominal heating capacities are based on indoor temperature 20°C DB, inlet water temperature 20°C, equivalent refrigerant piping: 7.5 m, level difference: 0 m.
(d) Actual number of units depends on the indoor unit type and the connection ratio restriction for the system (50%≤CR≤130%).
(e) Sound values are measured in a semi-anechoic room.
(f) Sound power level is an absolute value that a sound generates.
(g) Sound pressure level is a relative value depending on the distance and acoustic environment. For more details, refer to sound level drawings in the technical data book.

22.2. Electrical specifications

		RWEYQ8	RWEYQ10
Power supply			
• name		Y1	
• phase		3N~	
• frequency	(Hz)	50	
• voltage	(V)	380-415	
Current			
• nominal running current (RLA)[a]	(A)	7.2	9.5
• starting current (MSC)[b]	(A)	≤MCA	
• minimum circuit amps (MCA)[c]	(A)	12.6	12.6
• maximum fuse amps (MFA)[d]	(A)	20	20
• total overcurrent amps (TOCA)[e]	(A)	13.5	13.5
Voltage range[f]	(V)	380-415 ±10%	
Wiring connections			
• for power supply		5G	
• for connection to indoor unit		2 (F1/F2)	
Power supply intake		both indoor and outdoor unit	

(a) RLA is based on indoor unit temperature 27°C DB and 19°C WB, inlet water temperature 30°C.
(b) MSC=the maximum current during startup of the compressor. VRV IV uses only inverter compressors.
(c) MCA must be used to select the correct field wiring size. The MCA can be regarded as the maximum running current.
(d) MFA is used to select the circuit breaker and the ground fault circuit interrupter (earth leakage circuit breaker).
(e) TOCA means the total value of each OC set.
(f) Voltage range: units are suitable for use on electrical systems where voltage supplied to the unit terminal is not below or above listed range limits. Maximum allowable voltage range variation between phases is 2%.

Operation manual

Contents

Page

Operation manual 44
1. Definitions 45
   1.1. Meaning of warnings and symbols 45
   1.2. Meaning of used terms 45
2. Introduction 45
   2.1. General information 45
   2.2. System layout 47
3. Before operation 47
4. User interface 48
5. Operation range 48
6. Operation procedure 48
   6.1. Cooling, heating, fan only, and automatic operation 48
   6.2. Program dry operation 49
   6.3. Adjusting the air flow direction 49
   6.4. Setting the master user interface 49
   6.5. Precautions for group control system or two user interface control system 50
7. Energy saving and optimum operation 50
8. Maintenance 51
   8.1. Handling of heat source water 51
   8.2. Maintenance after a long stop period (e.g., at the beginning of the season) 51
   8.3. Maintenance before a long stop period (e.g., at the end of the season) 51
9. Symptoms that are not air conditioner troubles 51
10. Troubleshooting 52
11. After-sales service and warranty 53
   11.1. Warranty period 53
   11.2. After-sales service 53
   11.3. Shortening of "maintenance cycle" and "replacement cycle" needs to be considered in following situations 53
   11.4. Malfunction codes 54

Thank you for purchasing this Daikin VRV IV system.

The original instructions are written in English. All other languages are translations of the original instructions.

CAREFULLY READ THESE INSTRUCTIONS BEFORE OPERATING THE UNIT. THEY WILL TELL YOU HOW TO USE THE UNIT PROPERLY. KEEP THIS MANUAL IN A HANDY PLACE FOR FUTURE REFERENCE.

This appliance is not intended for use by persons, including children, with reduced physical, sensory or mental capabilities, or lack of experience and knowledge, unless they have been given supervision or instruction concerning use of the appliance by a person responsible for their safety. Children shall be supervised to ensure that they do not play with the appliance.

WARNING

- This unit contains electrical and hot parts.
- Before operating the unit, be sure the installation has been carried out correctly by an installer. If you feel unsure about operation, contact your installer for advice and information.

1. Definitions

1.1. Meaning of warnings and symbols

Warnings in this manual are classified according to their severity and probability of occurrence.

DANGER

Indicates an imminently hazardous situation which, if not avoided, will result in death or serious injury.

WARNING

Indicates a potentially hazardous situation which, if not avoided, could result in death or serious injury.

CAUTION

Indicates a potentially hazardous situation which, if not avoided, may result in minor or moderate injury. It may also be used to alert against unsafe practices.

NOTICE

Indicates situations that may result in equipment or property-damage accidents only.

INFORMATION

This symbol identifies useful tips or additional information.

Some types of danger are represented by special symbols:

Electric current.

Danger of burning and scalding.

1.2. Meaning of used terms

Installation manual:

Instruction manual specified for a certain product or application, explaining how to install, configure and maintain it.

Operation manual:

Instruction manual specified for a certain product or application, explaining how to operate it.

Maintenance instructions:

Instruction manual specified for a certain product or application, which explains (if relevant) how to install, configure, operate and/or maintain the product or application.

Dealer:

Sales distributor for products as per the subject of this manual.

Installer:

Technical skilled person who is qualified to install products as per the subject of this manual.

User:

Person who is owner of the product and/or operates the product.

Service company:

Qualified company which can perform or coordinate the required service to the unit.

Applicable legislation:

All international, European, national and local directives, laws, regulations and/or codes which are relevant and applicable for a certain product or domain.

Accessories:

Equipment which is delivered with the unit and which needs to be installed according to instructions in the documentation.

Optional equipment:

Equipment which can optionally be combined to the products as per the subject of this manual.

Field supply:

Equipment which needs to be installed according to instructions in this manual, but which are not supplied by Daikin.

2. Introduction

2.1. General information

The indoor unit part of a VRV IV water-cooled system can be used for heating/cooling applications. The type of indoor unit which can be used depends on the outdoor units series.

NOTICE

For future modifications or expansions of your system:

A full overview of allowable combinations (for future system extensions) is available in technical engineering data and should be consulted. Contact your installer to receive more information and professional advice.

In general following type of indoor units can be connected to a VRV IV water-cooled system:

- VRV direct expansion indoor units (air to air applications).
- AHU (air to air applications): EXV-kit is required.
- Aircurtain -Biddle- (air to air applications).

Airhandling unit connection in pair to VRV IV heat pump outdoor unit is supported.

For more specifications, see technical engineering data.

WARNING

- If you detect any abnormality such as smell of fire, turn off the power supply and call your dealer for instructions.
- Do not place objects in direct proximity of the outdoor unit and do not let leaves and other debris accumulate around the unit. Leaves are a hotbed for small animals which can enter the unit. Once in the unit, such animals can cause malfunctions, smoke or fire when making contact with electrical parts.
- Ask your dealer for improvement, repair, and maintenance. Incomplete improvement, repair, and maintenance may result in a water leakage, electric shock and fire.
- Do not insert fingers, rods or other objects into the air inlet or outlet. When the fan is rotating at high speed, it will cause injury.
- Never let the indoor unit or the user interface get wet. It may cause an electric shock or a fire.
- Never use a flammable spray such as hair spray, lacquer or paint near the unit. It may cause a fire.
- Never touch the air outlet or the horizontal blades while the swing flap is in operation. Fingers may become caught or the unit may break down.
- Never replace a fuse with a fuse of a wrong ampere ratings or other wires when a fuse blows out. Use of wire or copper wire may cause the unit to break down or cause a fire.
- To prevent refrigerant leak, contact your dealer. When the system is installed and runs in a small room, it is required to keep the concentration of the refrigerant, if by any chance coming out, below the limit. Otherwise, oxygen in the room may be affected, resulting in a serious accident.
- The refrigerant in the air conditioner is safe and normally does not leak. If the refrigerant leaks in the room, contact with a fire of a burner, a heater or a cooker may result in a harmful gas.
  Turn off any combustible heating devices, ventilate the room and contact the dealer where you purchased the unit.
  Do not use the air conditioner until a service person confirms that the portion where the refrigerant leaks is repaired.
- Improper installation or attachment of equipment or accessories could result in electric shock, short circuit, leaks, fire or other damage to the equipment.
- Be sure to use only accessories and spare parts made by Daikin which are specifically designed for use with the equipment and have them installed by a professional.
- Ask your dealer to move and reinstall the air conditioner. Incomplete installation may result in a water leakage, electric shock, and fire.
- Do not place a flammable spray bottle near the air conditioner and do not use sprays. Doing so may result in a fire.
- Before cleaning, be sure to stop the operation, turn the breaker off or pull out the supply cord. Otherwise, an electric shock and injury may result.
- Do not operate the air conditioner with wet hands. An electric shock may result.
- Do not place appliances which produce open fire in places exposed to the air flow from the unit or under the indoor unit. It may cause incomplete combustion or deformation of the unit due to the heat.
- Do not wash the air conditioner with water. Electric shock or fire may result.

WARNING

- Do not install the air conditioner at any place where flammable gas may leak out. If the gas leaks out and stays around the air conditioner, a fire may break out.
- In order to avoid electric shock or fire, make sure that an earth leak detector is installed.
- Be sure the air conditioner is electrically earthed.
- In order to avoid electric shock, make sure that the unit is grounded and that the earth wire is not connected to gas or water pipe, lightning conductor or telephone earth wire.
- Do not place a flower vase or anything containing water on the unit. Water may enter the unit, causing an electric shock or fire.
- Avoid placing the controller in a spot which can be splashed with water. Water entering the machine may cause an electric leak or may damage the internal electronic parts.
- This unit is made for indoor use. The unit should be installed in a machine room.
- In case of a natural disaster and the unit gets submerged, do not operate the unit, or otherwise a malfunction, electric shock or fire may occur.
- Watch your step at the time of air filter cleaning or inspection.

CAUTION

- It is not good for your health to expose your body to the air flow for a long time. In order to avoid injury, do not remove the fan guard of the outdoor unit.
- To avoid oxygen deficiency, ventilate the room sufficiently if equipment with burner is used together with the air conditioner.
- Do not allow anyone to climb on the outdoor unit or avoid placing any object on it. Falling or tumbling may result in injury.
- Never expose little children, plants or animals directly to the air flow.
- Do not let children play on and around the outdoor unit. If they touch the unit carelessly, it may result in injury.
- Never touch the internal parts of the controller.
  Do not remove the front panel. Some parts inside are dangerous to touch and appliance problems may happen. For checking and adjusting the internal parts, contact your dealer.
- Do not touch the heat exchanger fins. These fins are sharp and could result in cutting injuries.

NOTICE

- Never put any objects into the air inlet or outlet. Objects touching the fan at high operating speed can be dangerous.
- Never press the button of the user interface with a hard, pointed object. The user interface may be damaged.
- Never pull or twist the electric wire of the user interface. It may cause the unit to malfunction.
- Never inspect or service the unit by yourself. Ask a qualified service person to perform this work.
- Do not use the air conditioner for other purposes. In order to avoid any quality deterioration, do not use the unit for cooling precision instruments, food, plants, animals or works of art.
- After a long use, check the unit stand and fitting for damage. If damaged, the unit may fall and result in injury.
- Do not place items which might be damaged by moisture under the indoor unit. Condensation may form if the humidity is above 80%, if the drain outlet is blocked or the filter is polluted.
- Arrange the drain hose to ensure smooth drainage. Incomplete drainage may cause wetting of the building, furniture etc.
- Do not place the controller exposed to direct sunlight. The LCD display may get discoloured, failing to display the data.
- Do not wipe the controller operation panel with benzine, thinner, chemical dust cloth, etc. The panel may get discoloured or the coating peeled off. If it is heavily dirty, soak a cloth in water-diluted neutral detergent, squeeze it well and wipe the panel clean. Wipe it with another dry cloth.
- Do not operate the air conditioner when using a room fumigation-type insecticide. This could cause the chemicals to become deposited in the unit, which could endanger the health of those who are hypersensitive to chemicals.
- Do not place heaters directly below the unit, as heat can cause deformation.
- Turn off the power supply when the unit is not to be used for a long time.
- Do not place flammable containers, such as spray cans, within 1 m from the blow-off mouth.

2.2. System layout

Your VRV IV water-cooled series outdoor unit layout can be one of following:

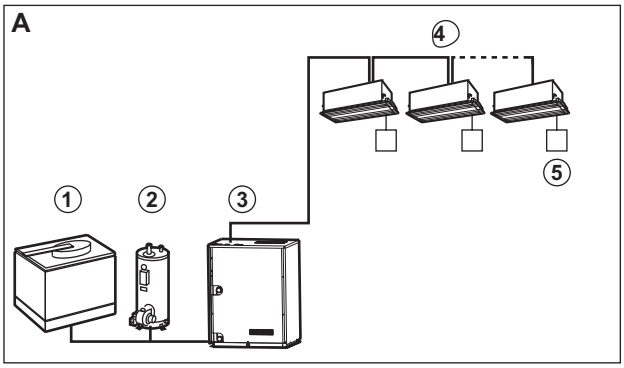

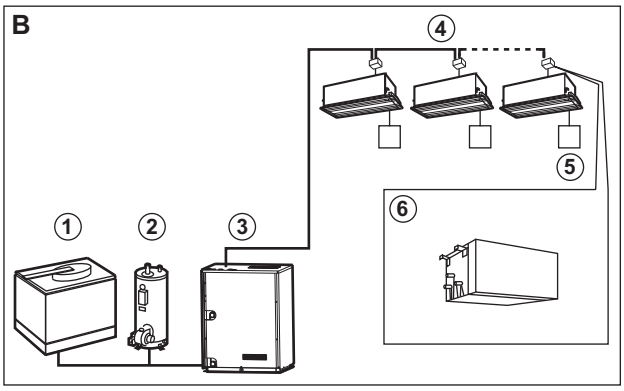

A Heat pump system:
Heating or cooling mode is possible.

B Heat recovery system:
Heating, cooling or simultaneous heating/cooling is possible.

1 Closed cooling tower

2 Boiler

3 VRV IV water-cooled unit

4 VRV DX indoor unit.

5 User interface:
Dedicated depending on indoor unit type.

6 BS box:
Required in each indoor unit if user selectable operation mode is required.

This system can deliver cooling or heating by exchanging the heat with chilled water or warmed water being sent from an external source (e.g.: boiler/solar panel/cooling tower/natural source/etc.).

3. Before operation

This operation manual is for systems with standard control. Before initiating operation, contact your dealer for the operation that corresponds to your system type and mark. If your installation has a customized control system, ask your dealer for the operation that corresponds to your system.

Operation modes (depending on indoor unit type):

- Heating and cooling.
- Fan only operation.
- Automatic cooling/heating changeover (heat recovery system)

Dedicated functions exist depending on the type of indoor unit, refer to dedicated installation/operation manual for more information.

4. User interface

This operation manual will give a non-exhaustive overview of the main functions of the system.

Detailed information on required actions to achieve certain functions can be found in the dedicated installation and operation manual of the indoor unit.

Refer to the operation manual of the installed user interface.

5. Operation range

Use the system in the following temperature and humidity ranges for safe and effective operation.

Ambient temperature around the VRV IV water-cooled unit	0~40°C(a)	
Indoor temperature	21~32°C DB 14~25°C WB	15~27°C DB
Indoor humidity	≤80%(b)	
Water temperature at the water inlet of the VRV IV water-cooled unit	10°C~45°C(c)	
Water flow rate	50~150 l/min(d)	

(a) Heat release from the unit: 0.71 kW/10 Hp/hour
(b) To avoid condensation and water dripping out of the unit.
If the temperature or the humidity is beyond these conditions, safety devices may be put in action and the air conditioner may not operate.
(c) The lower limit is extendable till –10°C (heating operation mode) in case the brine type setting is activated. (See "Brine type setting" on page 36)
(d) Water flow rate is indicated for 1 outdoor unit (not several as in multi outdoor unit combination)

Above operation range is only valid in case direct expansion indoor units are connected to the VRV IV system.

6. Operation procedure

- Operation procedure varies according to the combination of BS unit and user interface.
- To protect the unit, turn on the main power switch 6 hours before operation.
- If the main power supply is turned off during operation, operation will restart automatically after the power turns back on again.

6.1. Cooling, heating, fan only, and automatic operation

- Automatic operation can only be selected on the heat recovery system.
- Changeover cannot be made with a user interface whose display shows "change-over under centralized control" (refer to installation and operation manual of the user interface).
- When the display "change-over under centralized control" flashes, refer to "6.4. Setting the master user interface" on page 49.
- The fan may keep on running for about 1 minute after the heating operation stops.
- The air flow rate may adjust itself depending on the room temperature or the fan may stop immediately. This is not a malfunction.

6.1.1 For systems without cool/heat changeover remote control switch

1 Press the operation mode selector button of the user interface several times and select the operation mode of your choice.
- Cooling operation
- Heating operation
- Fan only operation
- Automatic operation (heat recovery system)

2 Press the ON/OFF button on the user interface.
The operation lamp lights up and the system starts operating.

INFORMATION

Automatic operation (heat recovery system ONLY). In this operation mode, cool/heat changeover is automatically performed.

6.1.2 For systems with cool/heat changeover remote control switch

Overview of the changeover remote control switch

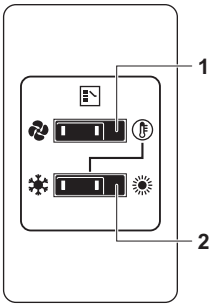

1 FAN ONLY/AIR CONDITIONING SELECTOR SWITCH
Set the switch to for fan only operation or to for heating or cooling operation.
2 COOL/HEAT CHANGEOVER SWITCH
Set the switch to for cooling or to for heating.

Operating the changeover remote control switch

1 Select operation mode with the cool/heat changeover switch as follows:

Cooling operation | Heating operation | Fan only operation

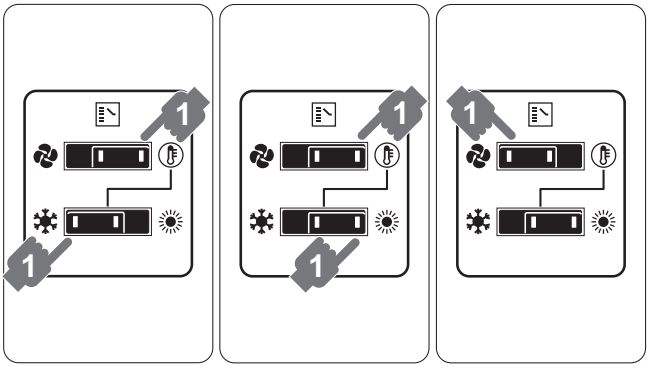

2 Press the ON/OFF button on the user interface.
The operation lamp lights up and the system starts operating.

Adjustment

For programming temperature, fan speed and air flow direction refer to the operation manual of the user interface.

Stopping the system

3 Press the ON/OFF button on the user interface once again.
The operation lamp goes out and the system stops operating.

NOTICE

Do not turn off power immediately after the unit stops, but wait for at least 5 minutes.

6.1.3 Explanation of heating operation

It may take longer to reach the set temperature for general heating operation than for cooling operation.

The following operation is performed in order to prevent the heating capacity from dropping or cold air from blowing.

Hot start

- In order to prevent cold air from blowing out of an indoor unit at the start of heating operation, the indoor fan is automatically stopped. The display of the user interface shows . It may take some time before the fan starts. This is not a malfunction.

INFORMATION

- The heating capacity drops when the supply water temperature falls. If this happens, use another heating device together with the unit. (When using together with appliances that produce open fire, ventilate the room constantly).
  Do not place appliances that produce open fire in places exposed to the air flow from the unit or under the unit.
- It takes some time to heat up the room from the time the unit is started since the unit uses a hot-air circulating system to heat the entire room.
- If the hot air rises to the ceiling, leaving the area above the floor cold, we recommend that you use the circulator (the indoor fan for circulating air). Contact your dealer for details.

6.2. Program dry operation

- The function of this program is to decrease the humidity in your room with minimal temperature decrease (minimal room cooling).
- The micro computer automatically determines temperature and fan speed (cannot be set by the user interface).
- The system does not go into operation if the room temperature is low (<20°C).

6.2.1 For systems without cool/heat changeover remote control switch

Starting the system

1 Press the operation mode selector button on the user interface several times and select (program dry operation).

2 Press the ON/OFF button of the user interface. The operation lamp lights up and the system starts operating.

3 Press the air flow direction adjust button (only for Double-flow, Multi-flow, Corner, Ceiling-suspended and Wall-mounted). Refer to "6.3. Adjusting the air flow direction" on page 49 for details.

Stopping the system

4 Press the ON/OFF button of the user interface once again. The operation lamp goes out and the system stops operating.

NOTICE

Do not turn off power immediately after the unit stops, but wait for at least 5 minutes.

6.2.2 For systems with cool/heat changeover remote control switch

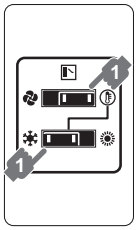

Starting the system

1 Select cooling operation mode with the cool/heat changeover remote control switch.

2 Press the operation mode selector button on the user interface several times and select (program dry operation).

3 Press the ON/OFF button of the user interface. The operation lamp lights up and the system starts operating.

4 Press the air flow direction adjust button (only for Double-flow, Multi-flow, Corner, Ceiling-suspended and Wall-mounted). Refer to "6.3. Adjusting the air flow direction" on page 49 for details.

Stopping the system

5 Press the ON/OFF button of the user interface once again. The operation lamp goes out and the system stops operating.

NOTICE

Do not turn off power immediately after the unit stops, but wait for at least 5 minutes.

6.3. Adjusting the air flow direction

Refer to the operation manual of the user interface.

6.3.1 Movement of the air flow flap

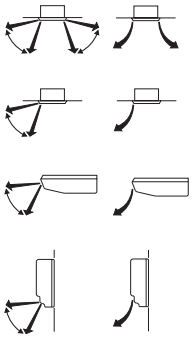

Double flow+multi-flow units

Corner units

Ceiling suspended units

Wall-mounted units

For the following conditions, a micro computer controls the air flow direction which may be different from the display.

COOLING	HEATING
• When the room temperature is lower than the set temperature. • When continuous operation with downward air flow is performed with a ceiling-suspended or a wall-mounted unit, the micro computer may control the flow direction, and then the user interface indication will also change.	• When starting operation. • When the room temperature is higher than the set temperature.
• When operating continuously at horizontal air flow direction.	

The air flow direction can be adjusted in one of the following ways:

- The air flow flap itself adjusts its position.
- The air flow direction can be fixed by the user.
- Automatic and desired position .

NOTICE

- The movable limit of the flap is changeable. Contact your dealer for details. (only for double-flow, multi flow, corner, ceiling-suspended and wall-mounted).
- Avoid operating in the horizontal direction . It may cause dew or dust to settle on the ceiling or flap.

6.4. Setting the master user interface

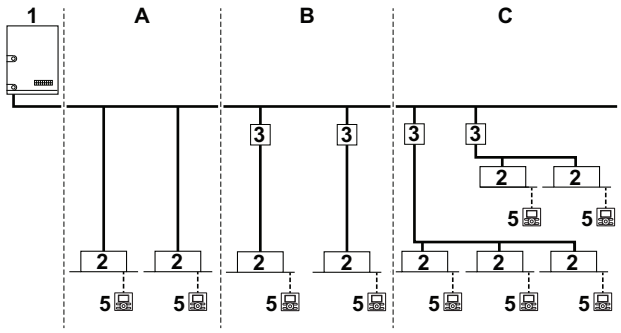

1 VRV IV water-cooled unit
2 VRV direct expansion (DX) indoor unit
3 BS box
4 User interface (dedicated depending on indoor unit type)

When the system is installed as shown in the figure above, it is necessary to designate one of the user interfaces as the master user interface depending on the setup **A**, **B** or **C**.

A. Heat pump system:
All VRV DX indoor units operate in the same operation mode. The master user interface decides the operation mode.

B. Heat recovery system (with a separate BS unit for each indoor unit):
Each VRV DX indoor unit is connected to a dedicated BS unit. No master user interface needs to be selected; each VRV DX indoor unit can select his own operation mode.

C. Heat recovery system (with one BS unit for several indoor units):
Several VRV DX indoor units are connected to 1 BS unit. The master user interface decides the operation mode for all VRV DX indoor units connected to the same BS unit.

The displays of slave user interfaces show (change-over under centralized control) and slave user interfaces automatically follow the operation mode directed by the master user interface.

Only the master user interface can select heating or cooling mode.

6.4.1 How to designate the master user interface

1 Press the operation mode selector button of the current master user interface for 4 seconds. In case this procedure was not yet performed, the procedure can be executed on the first user interface operated.
The display showing (change-over under centralized control) of all slave user interfaces connected to the same outdoor unit flashes.

2 Press the operation mode selector button of the controller that you wish to designate as the master user interface. Then designation is completed. This user interface is designated as the master user interface and the display showing (change-over under centralized control) vanishes. The displays of other user interfaces show (change-over under centralized control).

6.5. Precautions for group control system or two user interface control system

This system provides two more control systems in addition to the individual control system (one user interface controls one indoor unit). Confirm the following if your unit is of the following control system type:

- **Group control system**
  One user interface controls up to 16 indoor units. All indoor units are equally set.
- **Two user interface control system**
  Two user interfaces control one indoor unit (in case of group control system, one group of indoor units). The unit is individually operated.

NOTICE

Contact your dealer in case of changing the combination or setting of group control and two user interface control systems.

7. Energy saving and optimum operation

Observe the following precautions to ensure the system operates properly.

- Adjust the air outlet properly and avoid direct air flow to room inhabitants.
- Adjust the room temperature properly for a comfortable environment. Avoid excessive heating or cooling.
- Prevent direct sunlight from entering a room during cooling operation by using curtains or blinds.
- Ventilate often.
  Extended use requires special attention to ventilation.
- Keep doors and windows closed. If the doors and windows remain open, air will flow out of your room causing a decrease in the cooling or heating effect.
- Be careful not to cool or heat too much. To save energy, keep the temperature setting at a moderate level.
- Never place objects near the air inlet or the air outlet of the unit. It may cause deterioration in the effect or stop the operation.
- Turn off the main power supply switch to the unit when the unit is not used for longer periods of time. If the switch is on, it consumes electricity.
  Before restarting the unit, turn on the main power supply switch 6 hours before operation to ensure smooth running. (Refer to "Maintenance" in the indoor unit manual.)
- When the display shows (time to clean the air filter), ask a qualified service person to clean the filters. (Refer to "Maintenance" in the indoor unit manual.)
- Keep the indoor unit and user interface at least 1 m away from televisions, radios, stereos, and other similar equipment. Failing to do so may cause static or distorted pictures.
- Do not place items under the indoor unit, they may be damaged by water.
- Condensation may form if the humidity is above 80% or if the drain outlet gets blocked.
- Do not use other heating devices directly beneath the indoor unit.
- Fully use the function of air flow direction adjust. Cold air gathers on the floor, and warm air gathers close to the ceiling. Set the air flow direction parallel during cooling or dry operation, and set it downwards during heating operation.
- Make sure that the inlet and outlet of the indoor unit are not clogged.

Your system is equipped with advanced energy saving functionality. Depending on the priority emphasises can be put on energy saving or comfort level. Several parameters can be selected, resulting in the optimal balance between energy consumption and comfort for your particular application.

Several patterns are available and roughly explained below. Contact your installer or dealer for advice or to modify the parameters to the needs of your building.

Detailed information is given for the installer in the installation manual. He can help you to realize the best balance between energy consumption and comfort.

Two main operation methods are available:

- **Automatic**

The refrigerant temperature is set to match the required load.

E.g., when your system is operating in cooling, you do not need as much cooling under low outdoor temperatures (e.g., 25°C) as under high outdoor temperatures (e.g., 35°C). Using this idea, the system automatically starts increasing its refrigerant temperature, automatically reducing the delivered capacity and increasing the system's efficiency.

■ **Hi-sensible**

The refrigerant temperature is set higher (cooling) compared to normal operation. The focus under high sensible mode is comfort feeling for the customer.

The selection method of indoor units is important and has to be considered as the available capacity is not the same as under normal operation. For details concerning to Hi-sensible applications, please contact your installer.

Available comfort settings

For each of above modes a comfort level can be selected. It is related to the timing and the effort (energy consumption) which is put in achieving a certain room temperature by temporarily changing the refrigerant temperature to different values:

- Powerful
- Quick
- Mild
- Eco

8. Maintenance

CAUTION

Pay attention to the fan.

It is dangerous to inspect the unit while the fan is running.

Be sure to turn off the main switch before executing any maintenance task.

8.1. Handling of heat source water

Requests from manufacturer

- Do not fail to mount a strainer (sold separately as an accessory) in the inlet pipe for heat source water intake.
- Do not use any water contaminated by relatively high level of foreign materials for heat source.
- Carry out the control of water quality without fail.
  Otherwise, corrosion of condenser or piping occurs or germs may be generated.
- For the timing of cleaning and its method, consult with the dealer you purchased the unit.

Cleaning of the heat exchanger on the water side

- Scale, moss, etc will accumulate on the heat exchanger on the water side within an air conditioner when it is used for a long time. Clean the heat exchanger at regular intervals. If scale, moss, etc. has accumulated, the cooling and heating capacity may decline. The safety device will be repeatedly actuated causing normal operation to become impossible.
- Increase the frequency of cleaning when the unit is used in an area with poor water quality.

Cleaning of strainer

- Clean the strainer in the inlet pipe of heat source water intake.

8.2. Maintenance after a long stop period (e.g., at the beginning of the season)

- Check and remove everything that might be blocking inlet and outlet vents of indoor units and outdoor units.
- Run the pump and make sure that the water is circulating. If you operate the pump without water circulating, the unit may be damaged.
- Clean air filters and casings of indoor units(1). Refer to the operation manual supplied with the indoor units for details on how to proceed and make sure to install cleaned air filters back in the same position.
- Turn on the power at least 6 hours before operating the unit in order to ensure smoother operation. As soon as the power is turned on, the user interface display appears.

8.3. Maintenance before a long stop period (e.g., at the end of the season)

- Let the indoor units run in fan only operation for about half a day in order to dry the interior of the units. Refer to "6.1. Cooling, heating, fan only, and automatic operation" on page 48 for details on fan only operation.
- Turn off the power. The user interface display disappears.
- Clean air filters and casings of indoor units(1). Refer to the operation manual supplied with the indoor units for details on how to proceed and make sure to install cleaned air filters back in the same position.
- If the water piping can freeze, keep operating the heat source water pump, even when the unit is not operating.
- Remove all the water from the unit and the water piping if the pump is not used for a long time in the winter.

9. Symptoms that are not air conditioner troubles

Following symptoms are not air conditioner troubles:

Symptom 1: The system does not operate

- The air conditioner does not start immediately after the ON/OFF button on the user interface is pressed. If the operation lamp lights, the system is in normal condition. To prevent overloading of the compressor motor, the air conditioner starts 5 minutes after it is turned ON again in case it was turned OFF just before. The same starting delay occurs after the operation mode selector button was used.
- If "Under Centralized Control" is displayed on the user interface, pressing the operation button causes the display to blink for a few seconds. The blinking display indicates that the user interface cannot be used.
- The system does not start immediately after the power supply is turned on. Wait one minute until the micro computer is prepared for operation.

Symptom 2: Cool/Heat cannot be changed over

- When the display shows (change-over under centralized control), it shows that this is a slave user interface.
- When the cool/heat changeover remote control switch is installed and the display shows (change-over under centralized control), this is because cool/heat changeover is controlled by the cool/ heat changeover remote control switch. Ask your dealer where the remote control switch is installed.

Symptom 3: Fan operation is possible, but cooling and heating do not work

- Immediately after the power is turned on. The micro computer is getting ready to operate and is performing a communication check with all indoor units. Please wait 12 minutes (max.) till this process is finished.
- Only fan operation is possible. This is because the interlock contact point is not turned ON. Check that the water pump is operating. This is because the inlet water temperature of the heat source water is beyond the operating conditions.

(1) Contact your installer or maintenance person to clean air filters and casings of the indoor unit. Maintenance tips and procedures for cleaning are provided in the installation/ operation manuals of dedicated indoor units.

Symptom 4: The fan strength does not correspond to the setting

- The fan speed does not change even if the fan speed adjustment button in pressed. During heating operation, when the room temperature reaches the set temperature, the outdoor unit goes off and the indoor unit changes to whisper fan speed. This is to prevent cold air blowing directly on occupants of the room. The fan speed will not change even when another indoor unit is in heating operation, if the button is pressed.

Symptom 5: The fan direction does not correspond to the setting

- The fan direction does not correspond with the user interface display. The fan direction does not swing. This is because the unit is being controlled by the micro computer.

Symptom 6: White mist comes out of a unit

Indoor unit:

- When humidity is high during cooling operation
  If the interior of an indoor unit is extremely contaminated, the temperature distribution inside a room becomes uneven. It is necessary to clean the interior of the indoor unit. Ask your dealer for details on cleaning the unit. This operation requires a qualified service person.
- Immediately after the cooling operation stops and if the room temperature and humidity are low. This is because warm refrigerant gas flows back into the indoor unit and generates steam.

Symptom 7: The user interface display reads "U4" or "U5" and stops, but then restarts after a few minutes

- This is because the user interface is intercepting noise from electric appliances other than the air conditioner. The noise prevents communication between the units, causing them to stop. Operation automatically restarts when the noise ceases.

Symptom 8: Noise of air conditioners

Symptom 8.1: Indoor unit

- A "zeen" sound is heard immediately after the power supply is turned on.
  The electronic expansion valve inside an indoor unit starts working and makes the noise. Its volume will reduce in about one minute.
- A continuous low "shah" sound is heard when the system is in cooling operation or at a stop.
  When the drain pump (optional accessories) is in operation, this noise is heard.
- A "pishi-pishi" squeaking sound is heard when the system stops after heating operation.
  Expansion and contraction of plastic parts caused by temperature change make this noise.
- A low "sah", "choro-choro" sound is heard while the indoor unit is stopped.
  When another indoor unit is in operation, this noise is heard. In order to prevent oil and refrigerant from remaining in the system, a small amount of refrigerant is kept flowing.

Symptom 8.2: Indoor unit, outdoor unit

- A continuous low hissing sound is heard when the system is in cooling or defrost operation. This is the sound of refrigerant gas flowing through both indoor and outdoor units.
- A hissing sound which is heard at the start or immediately after stopping operation or defrost operation. This is the noise of refrigerant caused by flow stop or flow change.

Symptom 8.3: Outdoor unit

- When the tone of operating noise changes.
  This noise is caused by the change of frequency.

Symptom 9: Dust comes out of the unit

- When the unit is used for the first time in a long time.
  This is because dust has gotten into the unit.

Symptom 10: The units can give off odours

- The unit can absorb the smell of rooms, furniture, cigarettes, etc., and then emit it again.

Symptom 11: The display shows "88"

- This is the case immediately after the main power supply switch is turned on and means that the user interface is in normal condition. This continues for one minute.

Symptom 12: The compressor in the outdoor unit does not stop after a short heating operation

- This is to prevent refrigerant from remaining in the compressor. The unit will stop after 5 to 10 minutes.

Symptom 13: The inside of an outdoor unit is warm even when the unit has stopped

- This is because the crankcase heater is warming the compressor so that the compressor can start smoothly.

Symptom 14: Hot air can be felt when the indoor unit is stopped

- Several different indoor units are being run on the same system. When another unit is running, some refrigerant will still flow through the unit.

10. Troubleshooting

If one of the following malfunctions occur, take the measures shown below and contact your dealer.

WARNING

Stop operation and shut off the power if anything unusual occurs (burning smells etc.).

Leaving the unit running under such circumstances may cause breakage, electric shock or fire. Contact your dealer.

The system must be repaired by a qualified service person:

- If a safety device such as a fuse, a breaker or an earth leakage breaker frequently actuates or the ON/OFF switch does not properly work.
  Measure: Turn off the main power switch.
- If water leaks from the unit.
  Measure: Stop the operation.
- The operation switch does not work well.
  Measure: Turn off the power.
- If the user interface display indicates the unit number, the operation lamp flashes and the malfunction code appears.
  Measure: Notify your installer and report the malfunction code.

If the system does not properly operate except for the above mentioned cases and none of the above mentioned malfunctions is evident, investigate the system according to the following procedures.

1 If the system does not operate at all:

- Check that there is no power failure.
  Wait until power is restored. If power failure occurs during operation, the system automatically restarts immediately after the power supply is recovered.
- Check that no fuse has blown or breaker has worked.
  Change the fuse or reset the breaker if necessary.

2 If the system goes into fan only operation, but as soon as it goes into heating or cooling operation, the system stops:

- Check that the air inlet or outlet of the indoor unit is not blocked by obstacles. Remove any obstacle and make it well-ventilated. Check that the water inlet or outlet of the outdoor unit is not blocked.
- Check if the user interface display shows (time to clean the air filter). (Refer to "8. Maintenance" on page 51 and "Maintenance" in the indoor unit manual.)
- Check all valves in the water piping system. Open all valves.
- Check if the water filter is blocked. Clean the strainer.

- Check that the inlet temperature of the heat source water is within range.
- Check if the water flow of the heat source water is within range.

3 The system operates but cooling or heating is insufficient:

- Check that the air inlet or outlet of the indoor unit is not blocked by obstacles. Remove any obstacles and make it well-ventilated. Check that the water inlet or outlet of the outdoor unit is not blocked.
- Check that the air filter is not clogged (refer to "Maintenance" in the indoor unit manual).
- Check the temperature setting.
- Check the fan speed setting on your user interface.
- Check for open doors or windows. Close doors and windows to prevent wind from coming in.
- Check if there are too many occupants in the room during cooling operation. Check if the heat source of the room is excessive.
- Check if direct sunlight enters the room. Use curtains or blinds.
- Check if the air flow angle is proper.
- Check if the inlet water temperature of the heat source water is within range.
- Check if the water flow of the heat source water is within range.

If after checking all above items, it is impossible to fix the problem yourself, contact your installer and state the symptoms, the complete model name of the air conditioner (with manufacturing number if possible) and the installation date (possibly listed on the warranty card).

11. After-sales service and warranty

11.1. Warranty period

- This product includes a warranty card that was filled in by the dealer at the time of installation. The completed card has to be checked by the customer and stored carefully.
- If repairs to the air conditioner are necessary within the warranty period, contact your dealer and keep the warranty card at hand.

11.2. After-sales service

11.2.1 Recommendations for maintenance and inspection

Since dust collects when using the unit for several years, performance of the unit will deteriorate to some extent. As taking apart and cleaning interiors of units requires technical expertise and in order to ensure the best possible maintenance of your units, we recommend to enter into a maintenance and inspection contract on top of normal maintenance activities. Our network of dealers has access to a permanent stock of essential components in order to keep your air conditioner in operation as long as possible. Contact your dealer for more information.

When asking your dealer for an intervention, always state:

- The complete model name of the air conditioner.
- The manufacturing number (stated on the nameplate of the unit).
- The installation date.
- The symptoms or malfunction, and details of the defect.

WARNING

- Do not modify, disassemble, remove, reinstall or repair the unit yourself as incorrect dismantling or installation may cause an electric shock or fire. Contact your dealer.
- In case of accidental refrigerant leaks, make sure there are no naked flames. The refrigerant itself is entirely safe, non-toxic and non-combustible, but it will generate toxic gas when it accidentally leaks into a room where combustible air from fan heaters, gas cookers, etc. is present. Always have qualified service personnel confirm that the point of leakage has been repaired or corrected before resuming operation.

11.2.2 Recommended inspection and maintenance cycles

Be aware that the mentioned maintenance and replacement cycles do not relate to the warranty period of the components.

Table 1: "Inspection Cycle" and "Maintenance Cycle" list

Table 1 assumes the following conditions of use:

- Normal use without frequent starting and stopping of the unit. Depending on the model, we recommend not starting and stopping the machine more than 6 times/hour.
- Operation of the unit is assumed to be 10 hours/day and 2,500 hours/year.

Table 1

Component	Inspection cycle	Maintenance cycle (replacements and/or repairs)
Electric motor	1 year	20,000 hours
PCB		25,000 hours
Heat exchanger		5 years
Sensor (thermistor, etc.)		5 years
User interface and switches		25,000 hours
Drain pan		8 years
Expansion valve		20,000 hours
Solenoid valve		20,000 hours

NOTICE

1 Table 1 indicates main components. Refer to your maintenance and inspection contract for more details.

2 Table 1 indicates recommended intervals of maintenance cycles. However, in order to keep the unit operational as long as possible, maintenance work may be required sooner. Recommended intervals can be used for appropriate maintenance design in terms of budgeting maintenance and inspection fees. Depending on the content of the maintenance and inspection contract, inspection and maintenance cycles may in reality be shorter than listed.

11.3. Shortening of "maintenance cycle" and "replacement cycle" needs to be considered in following situations

The unit is used in locations where:

- Heat and humidity fluctuate out of the ordinary.
- Power fluctuation is high (voltage, frequency, wave distortion, etc.) (the unit cannot be used if power fluctuation is outside the allowable range).
- Bumps and vibrations are frequent.
- Dust, salt, harmful gas or oil mist such as sulphurous acid and hydrogen sulfide may be present in the air.
- The machine is started and stopped frequently or operation time is long (sites with 24 hour air-conditioning).

Recommended replacement cycle of wear parts

Table 2: "Replacement Cycle" list

Component	Inspection cycle	Maintenance cycle (replacements and/or repairs)
Air filter	1 year	5 years
High efficiency filter		1 year
Fuse		10 years
Crankcase heater		8 years

NOTICE

- Table 2: "Replacement Cycle" list indicates main components. Refer to your maintenance and inspection contract for more details.
- Table 2: "Replacement Cycle" list indicates recommended intervals of replacement cycles. However, in order to keep the unit operational as long as possible, maintenance work may be required sooner. Recommended intervals can be used for appropriate maintenance design in terms of budgeting maintenance and inspection fees. Contact your dealer for details.

INFORMATION

Damage due to taking apart or cleaning interiors of units by anyone other than our authorised dealers may not be included in the warranty.

Moving and discarding the unit

- Contact your dealer for removing and reinstalling the total unit. Moving units requires technical expertise.
- This unit uses hydrofluorocarbon. Contact your dealer when discarding this unit. It is required by law to collect, transport and discard the refrigerant in accordance with the "hydrofluorocarbon collection and destruction" regulations.

11.4. Malfunction codes

In case a malfunction code appears on the indoor unit user interface display, contact your installer and inform the malfunction code, the unit type, and serial number (you can find this information on the nameplate of the unit).

For your reference, a list with general malfunction codes is provided. You can, depending on the level of the malfunction code, reset the code by pushing the ON/OFF button. If not, ask your installer for advice.

Malfunction code	
Main code	Contents
A0	External protection device was activated
A1	EEPROM failure (indoor)
A3	Drain system malfunction (indoor)
A6	Fan motor malfunction (indoor)
A7	Swing flap motor malfunction (indoor)
A9	Expansion valve malfunction (indoor)
AF	Drain malfunction (indoor unit)
AH	Filter dust chamber malfunction (indoor)
AJ	Capacity setting malfunction (indoor)
C1	Transmission malfunction between main PCB and sub PCB (indoor)
C4	Heat exchanger thermistor malfunction (indoor; liquid)
C5	Heat exchanger thermistor malfunction (indoor; gas)
C9	Suction air thermistor malfunction (indoor)
CA	Discharge air thermistor malfunction (indoor)
CE	Movement detector or floor temperature sensor malfunction (indoor)
CJ	User interface thermistor malfunction (indoor)
E1	PCB malfunction (outdoor)
E2	Current leakage detector was activated (outdoor)
E3	High pressure switch was activated
E4	Low pressure malfunction (outdoor)
E5	Compressor lock detection (outdoor)
E9	Electronic expansion valve malfunction (outdoor)
F3	Discharge temperature malfunction (outdoor)
F4	Abnormal suction temperature (outdoor)
F6	Refrigerant overcharge detection
H3	High pressure switch malfunction
H4	Low pressure switch malfunction
J1	Pressure sensor malfunction
J2	Current sensor malfunction
J3	Discharge temperature sensor malfunction (outdoor)
J4	Heat exchanger gas temperature sensor malfunction (outdoor)
J5	Suction temperature sensor malfunction (outdoor)
J7	Liquid temperature sensor (after subcool HE) malfunction (outdoor)
J8	Liquid temperature sensor malfunction (outdoor)
J9	Gas temperature sensor malfunction (outdoor)
JA	High pressure sensor malfunction (S1NPH)
JC	Low pressure sensor malfunction (S1NPL)
L1	INV PCB abnormal
L4	Fin temperature abnormal
L5	Inverter PCB faulty
L8	Compressor over current detected
L9	Compressor lock (startup)
LC	Transmission outdoor unit - inverter: INV transmission trouble
P1	INV unbalanced power supply voltage
P4	Fin thermistor malfunction
PJ	Capacity setting malfunction (outdoor)
U0	Abnormal low pressure drop, faulty expansion valve
U1	Reversed power supply phase malfunction
U2	INV voltage power shortage
U3	System test run not yet executed
U4	Faulty wiring indoor/outdoor
U5	Abnormal user interface - indoor communication
U7	Faulty wiring to outdoor/outdoor
U8	Abnormal main-sub user interface communication
U9	System mismatch. Wrong type of indoor units combined. Indoor unit malfunction.
UA	Connection malfunction over indoor units or type mismatch
UC	Centralized address duplication
UE	Malfunction in communication centralized control device - indoor unit
UF	Auto address malfunction (inconsistency)
UH	Auto address malfunction (inconsistency)

12. Important information regarding the refrigerant used

This product contains fluorinated greenhouse gases. Do not vent gases into the atmosphere.

Refrigerant type: R410A

GWP[1] value: 2087,5

[1] GWP=global warming potential

Periodical inspections for refrigerant leaks may be required depending on European or local legislation. Please contact your local dealer for more information.

4P399208-1 0000000T

Copyright 2015 Daikin

DAIKIN EUROPE N.V.
Zandvoordestraat 300, B-8400 Oostende, Belgium

4P399208-1 2015.01