Split

Air Conditioning Technical Data

RXM-N

TABLE OF CONTENTS

RXM-N

1 Features . . . 2

2 Specifications . . . 3
- Capacity and Power input . . . 3
- Capacity and Power input . . . 5
- Technical Specifications . . . 8
- Electrical Specifications . . . 9

3 Electrical data . . . 11

4 Capacity tables . . . 12
- Cooling/Heating Capacity Tables . . . 12

5 Dimensional drawings . . . 13

6 Centre of gravity . . . 14

7 Piping diagrams . . . 15

8 Wiring diagrams . . . 16
- Wiring Diagrams - Single Phase . . . 16

9 Sound data . . . 17
- Sound Pressure Spectrum . . . 17

10 Operation range . . . 18

1 Features

- Seasonal efficiency values up to A+++
- Choosing for an R-32 product, reduces the environmental impact with 68% compared to R-410A and leads directly to lower energy consumption thanks to its high energy efficiency
- Daikin outdoor units are neat, sturdy and can easily be mounted on a roof or terrace or simply placed against an outside wall
- Outdoor units are fitted with a swing compressor, renowned for its low noise and high energy efficiency
- Outdoor units for pair application
- Anti-corrosion treated outdoor heat exchanger fin

Outdoor unit
silent operation

2 Specifications

2-1 Capacity and Power input				FTXM71M/RXM71N
Indoor unit				FTXM71M2V1B
Outdoor unit				RXM71N2V1B
Cooling capacity	Min.		kW	2.30
			Btu/h	7,800
			kcal/h	2,000
	Nom.		kW	7.10
			Btu/h	24,200
			kcal/h	6,100
	Max.		kW	8.50
			Btu/h	29,000
			kcal/h	7,300
Heating capacity	Min.		kW	2.30
			Btu/h	7,800
			kcal/h	2,000
	Nom.		kW	8.20
			Btu/h	28,000
			kcal/h	7,000
	Max.		kW	10.20
			Btu/h	34,800
			kcal/h	8,800
Power input	Cooling	Min.	kW	0.49
		Nom.	kW	2.34
		Max.	kW	3.44
	Heating	Min.	kW	0.45
		Nom.	kW	2.57
		Max.	kW	3.51
Space cooling	Capacity	Pdesign	kW	7.10
	Energy efficiency class			A++
	SEER			6.11
	Annual energy consumption		kWh/a	407
	A Condition (35°C - 27/19)	Pdc	kW	7.10
		EERd		3.03
		Power input	kW	2.34
	B Condition (30°C - 27/19)	Pdc	kW	5.23
		EERd		4.83
		Power input	kW	1.08
	C Condition (25°C - 27/19)	Pdc	kW	3.36
		EERd		7.32
		Power input	kW	0.46
	D Condition (20°C - 27/19)	Pdc	kW	2.60
		EERd		9.32
		Power input	kW	0.28

2 Specifications

2-1 Capacity and Power input					FTXM71M/RXM71N
Space heating (Average climate)	Capacity	Pdesign		kW	6.20
	Energy efficiency class				A
	SCOP/A				3.81
	SCOPnet/A				3.84
	Pdh Heating capacity at -10°			kW	5.01
	Annual energy consumption			kWh/a	2,276
	Required back up heating cap at design conditions			kW	1.19
	TOL	Tol (temperature operating limit)		°C	-15
		Pdh (declared heating cap)		kW	4.23
		COPd (declared COP)			1.75
		Power input		kW	2.42
	TBivalent	Tbiv (bivalent temperature)		°C	-7
		Pdh (declared heating cap)		kW	5.48
		COPd (declared COP)			2.15
		Power input		kW	2.55
	A Condition (-7°C)	Pdh (declared heating cap)		kW	5.48
		COPd (declared COP)			2.15
		Power input		kW	2.55
	B Condition (2°C)	Pdh (declared heating cap)		kW	3.34
		COPd (declared COP)			3.80
		Power input		kW	0.88
	C Condition (7°C)	Pdh (declared heating cap)		kW	2.32
		COPd (declared COP)			5.38
		Power input		kW	0.43
	D Condition (12°C)	Pdh (declared heating cap)		kW	2.66
		COPd (declared COP)			6.48
		Power input		kW	0.41
Current	Nominal running current (RLA) - 50Hz	Cooling		A	10.27
		Heating		A	11.26
Cooling	Cdc (Degradation cooling)				0.25
Heating	Cdh (Degradation heating)				0.25
Cooling function included					Yes
Heating function included					Yes
Average climate included					Yes
Cold season included					No
Warm season included					Yes
Ecolabel logo					No
Eurovent	Sound power level outdoor	Cooling	Nom.	dBA	66
	Sound power level indoor	Cooling	Nom.	dBA	62
	Piping length	Cooling	Measuring condition	m	5.0
Nominal efficiency	EER				3.03
	COP				3.19
	Annual energy consumption			kWh	1,170
	Energy labeling Directive	Cooling			B
		Heating			D

2 Specifications

2-1 Capacity and Power input					FTXM71M/RXM71N
Power consumption in other than active mode	Off mode	POFF		W	1.0
	Standby mode	Cooling	PSB	W	1.0
	Thermostat-off mode	PTO	Cooling	W	12
			Heating	W	12
Power factor	Nominal	Cooling		%	99.20
		Heating		%	99.30
Space heating (Warm climate)	Capacity	Pdesignh		kW	3.34
	Energy efficiency class				A+++
	SCOP				5.22
	SCOPnet				5.27
	Annual energy consumption			kWh/a	895
	Required back up heating cap at design conditions			kW	0.00
	TOL	Tol (temperature operating limit)		°C	-15
		Pdh (declared heating cap)		kW	4.23
		COPd (declared COP)			1.75
		Power input		kW	2.42
	TBivalent	Tbiv (bivalent temperature)		°C	2
		Pdh (declared heating cap)		kW	3.34
		COPd (declared COP)			3.80
		Power input		kW	0.88
	B Condition (2°C)	Pdh (declared heating cap)		kW	3.34
		COPd (declared COP)			3.80
		Power input		kW	0.88
	C Condition (7°C)	Pdh (declared heating cap)		kW	2.32
		COPd (declared COP)			5.38
		Power input		kW	0.43
	D Condition (12°C)	Pdh (declared heating cap)		kW	2.70
		COPd (declared COP)			6.48
		Power input		kW	0.41

Notes

When normally running: +22°C / + 32°C

Nominal heating capacities are based on: indoor temperature: 20°CDB, outdoor temperature: 7°CDB, 6°CWB, equivalent refrigerant piping: 5m, level difference: 0m.

See separate drawing for electrical data

2-2 Capacity and Power input			FTXM71N/RXM71N
Indoor unit			FTXM71N2V1B
Outdoor unit			RXM71N2V1B
Cooling capacity	Min.	kW	2.30
		Btu/h	7,800
		kcal/h	1,978
	Nom.	kW	7.10
		Btu/h	24,200
		kcal/h	6,105
	Max.	kW	8.50
		Btu/h	29,000
		kcal/h	7,309

2 Specifications

2-2 Capacity and Power input				FTXM71N/RXM71N
Heating capacity	Min.		kW	2.30
			Btu/h	7,800
			kcal/h	2,000
	Nom.		kW	8.20
			Btu/h	28,000
			kcal/h	7,051
	Max.		kW	10.20
			Btu/h	34,800
			kcal/h	8,770
Power input	Cooling	Nom.	kW	2.34
	Heating	Nom.	kW	2.57
Space cooling	Capacity	Pdesign	kW	7.10
	Energy efficiency class			A++
	SEER			6.20
	Annual energy consumption		kWh/a	401
	A Condition (35°C - 27/19)	Pdc	kW	7.10
		EERd		3.03
		Power input	kW	2.34
	B Condition (30°C - 27/19)	Pdc	kW	5.23
		EERd		4.88
		Power input	kW	1.07
	C Condition (25°C - 27/19)	Pdc	kW	3.36
		EERd		7.39
		Power input	kW	0.45
	D Condition (20°C - 27/19)	Pdc	kW	2.60
		EERd		9.69
		Power input	kW	0.27

2 Specifications

2-2 Capacity and Power input					FTXM71N/RXM71N
Space heating (Average climate)	Capacity	Pdesign		kW	6.20
	Energy efficiency class				A+
	SCOP/A				4.10
	SCOPnet/A				4.14
	Pdh Heating capacity at -10°			kW	5.01
	Annual energy consumption			kWh/a	2,115
	Required back up heating cap at design conditions			kW	1.19
	TOL	Tol (temperature operating limit)		°C	-15
		Pdh (declared heating cap)		kW	4.23
		COPd (declared COP)			1.75
		Power input		kW	2.42
	TBivalent	Tbiv (bivalent temperature)		°C	-7
		Pdh (declared heating cap)		kW	5.48
		COPd (declared COP)			2.18
		Power input		kW	2.52
	A Condition (-7°C)	Pdh (declared heating cap)		kW	5.48
		COPd (declared COP)			2.14
		Power input		kW	2.56
	B Condition (2°C)	Pdh (declared heating cap)		kW	3.34
		COPd (declared COP)			4.18
		Power input		kW	0.80
	C Condition (7°C)	Pdh (declared heating cap)		kW	2.32
		COPd (declared COP)			5.80
		Power input		kW	0.40
	D Condition (12°C)	Pdh (declared heating cap)		kW	2.38
		COPd (declared COP)			7.17
		Power input		kW	0.33
Current	Nominal running current (RLA) - 50Hz	Cooling		A	10.27
		Heating		A	11.26
Cooling	Cdc (Degradation cooling)				0.25
Heating	Cdh (Degradation heating)				0.25
Cooling function included					Yes
Heating function included					Yes
Average climate included					Yes
Cold season included					No
Warm season included					Yes
Ecolabel logo					No
Eurovent	Sound power level outdoor	Cooling	Nom.	dBA	66
	Sound power level indoor	Cooling	Nom.	dBA	62
	Piping length	Cooling	Measuring condition	m	5.00
Nominal efficiency	EER				3.03
	COP				3.19
	Annual energy consumption			kWh	1,172
	Energy labeling Directive	Cooling			B
		Heating			D

2 Specifications

2-2 Capacity and Power input					FTXM71N/RXM71N
Power consumption in other than active mode	Crankcase heater mode	PCK		W	0
	Off mode	POFF		W	1
	Standby mode	Cooling	PSB	W	1
		Heating	PSB	W	1
	Thermostat-off mode	PTO	Cooling	W	12
			Heating	W	13
Power factor	Nominal	Cooling		%	99.20
		Heating		%	99.30
Space heating (Warm climate)	Capacity	Pdesignh		kW	3.34
	Energy efficiency class				A+++
	SCOP				5.74
	SCOPnet				5.81
	Annual energy consumption			kWh/a	814
	Required back up heating cap at design conditions			kW	0.00
	TOL	Tol (temperature operating limit)		°C	-15
		Pdh (declared heating cap)		kW	4.23
		COPd (declared COP)			1.75
		Power input		kW	2.42
	TBivalent	Tbiv (bivalent temperature)		°C	2
		Pdh (declared heating cap)		kW	3.34
		COPd (declared COP)			4.18
		Power input		kW	0.80
	B Condition (2°C)	Pdh (declared heating cap)		kW	3.34
		COPd (declared COP)			4.18
		Power input		kW	0.80
	C Condition (7°C)	Pdh (declared heating cap)		kW	2.32
		COPd (declared COP)			5.80
		Power input		kW	0.40
	D Condition (12°C)	Pdh (declared heating cap)		kW	2.38
		COPd (declared COP)			7.17
		Power input		kW	0.33

Notes

See separate drawing for operation range

See separate drawing for electrical data

Nominal cooling capacities are based on: indoor temperature: 27°CDB, 19°CWB, outdoor temperature: 35°CDB, equivalent refrigerant piping: 5m, level difference: 0m.

Nominal heating capacities are based on: indoor temperature: 20°CDB, outdoor temperature: 7°CDB, 6°CWB, equivalent refrigerant piping: 5m, level difference: 0m.

2-3 Technical Specifications				RXM71N
Capacity control	Method			Variable (inverter)
Casing	Colour			Ivory white
Dimensions	Unit	Height	mm	734
		Width	mm	870
		Depth	mm	320
	Packed unit	Height	mm	820
		Width	mm	1,050
		Depth	mm	480
Weight	Unit		kg	56
	Packed unit		kg	60

2 Specifications

2-3 Technical Specifications					RXM71N
Packing	Weight			kg	4
Heat exchanger	Length			mm	920
	Rows	Quantity			2
	Fin pitch			mm	1.40
	Stages	Quantity			32
	Passes	Quantity			2.2
	Tube type				ø7 Hi-XD
	Fin	Type			Waffle fin (PE)
Compressor	Model				2YC71DXD#C
	Oil Amount			cm³	900
	Type				Hermetically sealed swing compressor
	Output			W	2,400
	Oil Type				FW68DA
Fan	Type				Propeller fan
	Air flow rate	Cooling	Nom.	m³/min	49.0
				cfm	1,730
		Heating	Nom.	m³/min	46.2
				cfm	1,632
Fan motor	Model				D90B-37
	Output			W	128
	Speed	Cooling	High	rpm	880
			Nom.	rpm	780
			Low	rpm	700
		Heating	High	rpm	740
			Nom.	rpm	740
			Low	rpm	680
Sound power level	Cooling			dBA	66
	Heating			dBA	67
Sound pressure level	Cooling	Nom.		dBA	47
	Heating	Nom.		dBA	48
Operation range	Cooling	Ambient	Min.	°CDB	-10
			Max.	°CDB	46
	Heating	Ambient	Min.	°CWB	-15
			Max.	°CWB	18
Refrigerant	Type				R-32
	Charge			kg	1.15
				TCO_2eq	0.78
	GWP				675.0
Piping connections	Liquid	OD		mm	6,4
	Gas	OD		mm	15.90
	Drain	OD		mm	18
	Piping length	OU - IU	Max.	m	30.0
	Additional refrigerant charge			kg/m	0.02 (for piping length exceeding 10m)
	Level difference	IU - OU	Max.	m	20.0
	Heat insulation				Both liquid and gas pipes

Standard Accessories : Drain plug; Quantity : 1;

Standard Accessories : Installation manual; Quantity : 1;

Standard Accessories : Refrigerant charge label; Quantity : 1;

Standard Accessories : Multilingual fluorinated greenhouse gases labels; Quantity : 1;

Standard Accessories : Drain cap (1); Quantity : 6;

Standard Accessories : Drain cap (2); Quantity : 3;

2-4 Electrical Specifications			RXM71N
Power supply	Phase		1~
	Frequency	Hz	50
	Voltage	V	220-240

2 Specifications

2-4 Electrical Specifications			RXM71N
Wiring connections	For power supply	Quantity	3
		Remark	Earth wire included
	For connection with indoor	Quantity	4
		Remark	Earth wire included

2

Notes

See separate drawing for operation range

See separate drawing for electrical data

Contains fluorinated greenhouse gases

3 Electrical data

3 - 1 Electrical Data

RXM71N

Unit combination restrictions		Power supply					COMP		OFM		IFM	
Indoor unit	Outdoor unit	①	②	③	MCA	MFA	RHz	RLA	kW	FLA	kW	FLA
FTXM71M2V1B	RXM71M2V1B	50	220	MAX. 50Hz 264V MIN. 50Hz 198V	18,3	20	49,0	7,6	0,128	0,38	0,052	0,34
		50	230					7,2				
		50	240					6,9				
FTXM71M2V1B	RXM71N2V1B	50	220	MAX. 50Hz 264V MIN. 50Hz 198V	18,3	20	49,0	7,6	0,128	0,38	0,052	0,34
		50	230					7,2				
		50	240					6,9				
FTXM71N2V1B	RXM71N2V1B	50	220	MAX. 50Hz 264V MIN. 50Hz 198V	18,3	20	49,0	7,6	0,128	0,38	0,052	0,34
		50	230					7,2				
		50	240					6,9				

Notes

1. The RLA is based on the following conditions.
   Indoor temperature 27°C DB / 19°C WB
   Outdoor temperature 35°C DB
2. Select the wire size according to the MCA.
3. The maximum allowable voltage that is unbalanced between phases is 2%.
4. Use a circuit breaker instead of a fuse.

Symbols

① Hz
② Voltage
③ Voltage range
MCA Minimum Circuit Ampere [A]
MFA Maximum Fuse Ampere [A]
RLA Rated load amps [A]
COMP Compressor
OFM Outdoor fan motor
IFM Indoor fan motor
FLA Full Load Ampere [A]
kW Fan motor rated output [kW]
RHz Rated operating frequency [Hz]

3D105008C

4 Capacity tables

4 - 1 Cooling/Heating Capacity Tables

FTXM71N / RXM71N

AFR	17,6
BF	0,14

Cooling 220-240V 50Hz

1	2	3																	
		20			25			30			32			35			40		
		TC	SHC	PI	TC	SHC	PI	TC	SHC	PI	TC	SHC	PI	TC	SHC	PI	TC	SHC	PI
14	20	6,21	4,59	1,66	6,21	4,59	1,88	6,21	4,59	2,09	6,21	4,59	2,18	6,21	4,59	2,31	5,95	4,46	2,49
16	22	7,60	5,05	1,81	7,27	4,88	1,98	6,94	4,72	2,15	6,81	4,66	2,22	6,61	4,66	2,32	6,28	4,41	2,50
18	25	7,93	5,24	1,81	7,60	5,09	1,99	7,27	4,94	2,16	7,13	4,88	2,23	6,94	4,79	2,33	6,61	4,64	2,51
19	27	8,09	5,49	1,82	7,76	5,34	2,00	7,43	5,20	2,16	7,30	5,14	2,24	7,10	5,05	2,34	6,77	4,91	2,52
22	30	8,58	5,28	1,83	8,25	5,15	2,01	7,92	5,02	2,18	7,79	4,97	2,25	7,59	4,89	2,35	7,26	4,77	2,53
24	32	8,91	5,13	1,84	8,58	5,01	2,13	8,25	4,89	2,19	8,12	4,84	2,26	7,92	4,77	2,36	7,59	4,66	2,54

AFR	18,4

Heating 220-240V 50Hz

2	4											
	-15		-10		-5		0		6		10	
	TC	PI	TC	PI	TC	PI	TC	PI	TC	PI	TC	PI
15	4,59	1,77	5,52	1,85	6,45	1,92	7,37	2,00	8,48	2,53	9,22	2,60
20	4,31	1,81	5,24	1,88	6,16	1,95	7,09	2,07	8,20	2,57	8,94	2,64
22	4,20	1,83	5,12	1,90	6,05	1,98	6,98	2,08	8,09	2,60	8,83	2,67
24	4,08	1,84	5,01	1,92	5,94	1,99	6,86	2,11	7,97	2,61	8,71	2,68
25	4,03	1,85	4,95	1,93	5,88	2,01	6,81	2,12	7,92	2,63	8,66	2,70
27	3,91	1,86	4,84	1,94	5,77	2,01	6,69	2,14	7,80	2,64	8,54	2,71

Symbols

- TC: Total capacity [kW]
- PI: Power input [kW]
- SHC: Sensible heat capacity [kW]
- AFR: Air flow rate [m³/min]
- BF: Bypass factor

1 Indoor air temperature [°C WB]

2 Indoor air temperature [°C DB]

3 Outdoor air temperature [°C DB]

4 Outdoor air temperature [°C WB]

Notes

1. The capacities are based on the following conditions:
   Corresponding refrigerant piping length: 5.0 m
   Level difference: 0m
2. The bold cells indicate the standard conditions.
   Rated operating frequency [Hz]

3D105003B

5 Dimensional drawings

5 - 1 Dimensional Drawings

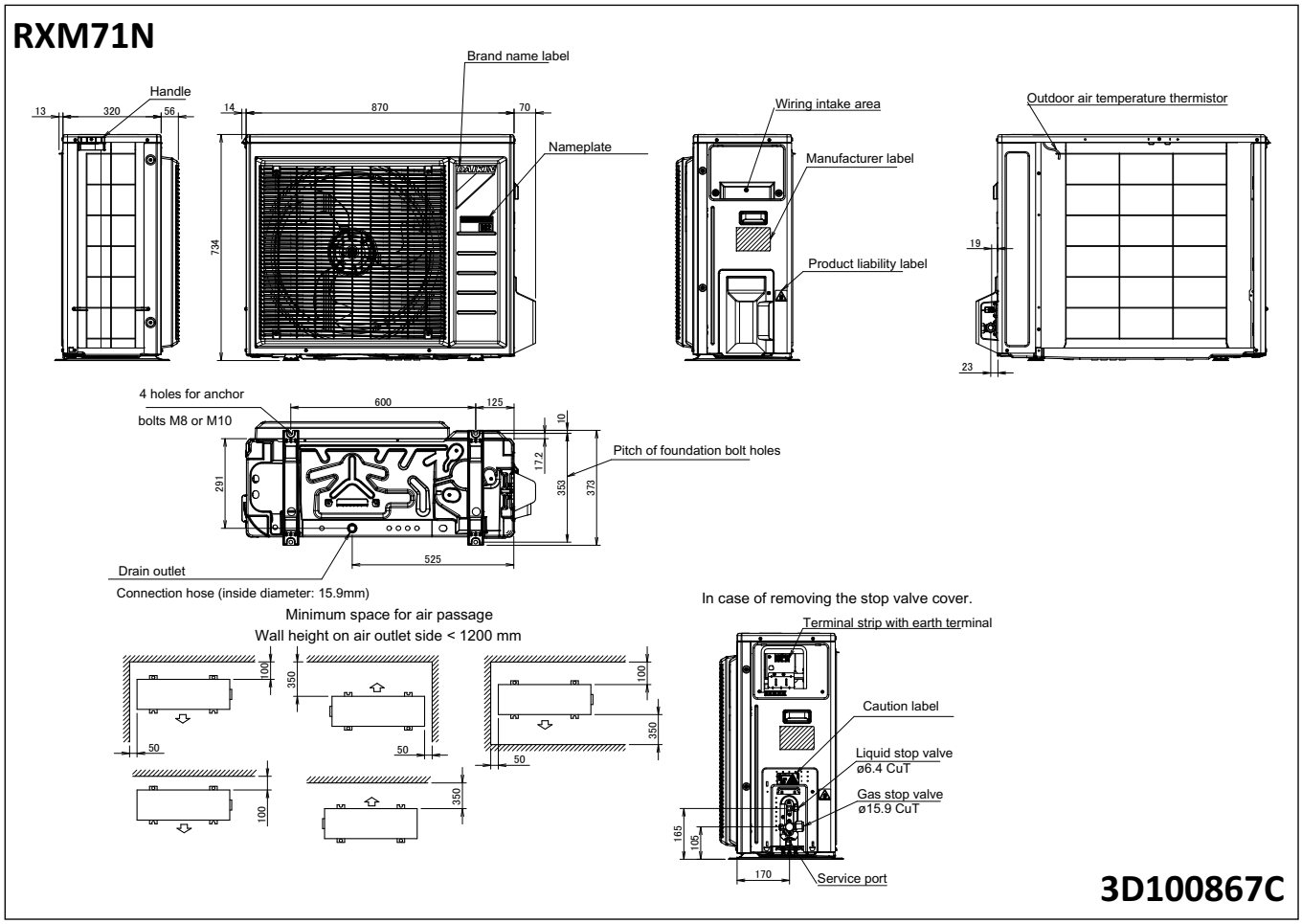

6 Centre of gravity

6 - 1 Centre of Gravity

RXM71N

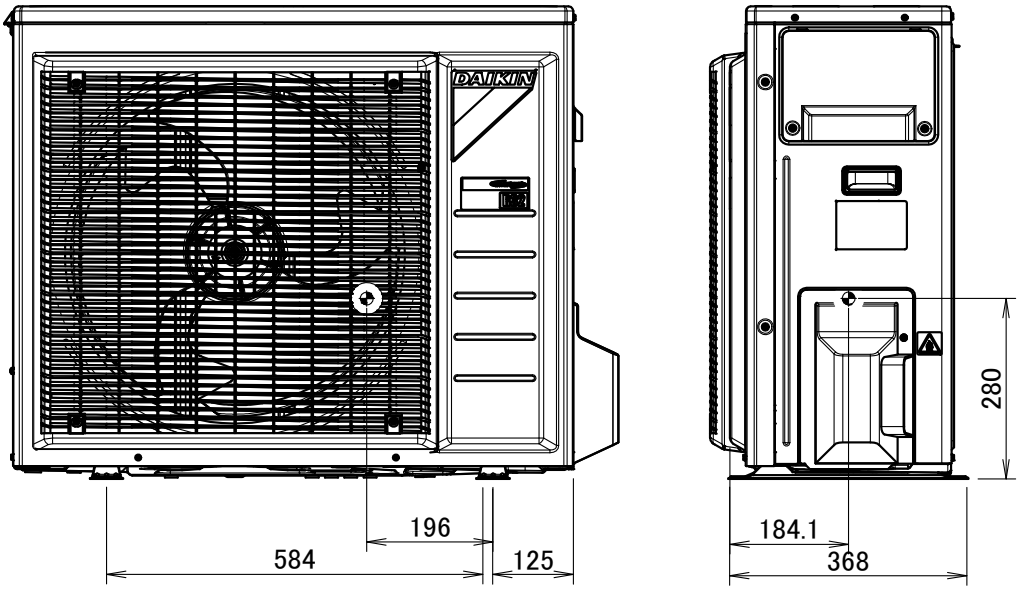

4D100855B

7 Piping diagrams

7 - 1 Piping Diagrams

RXM71N

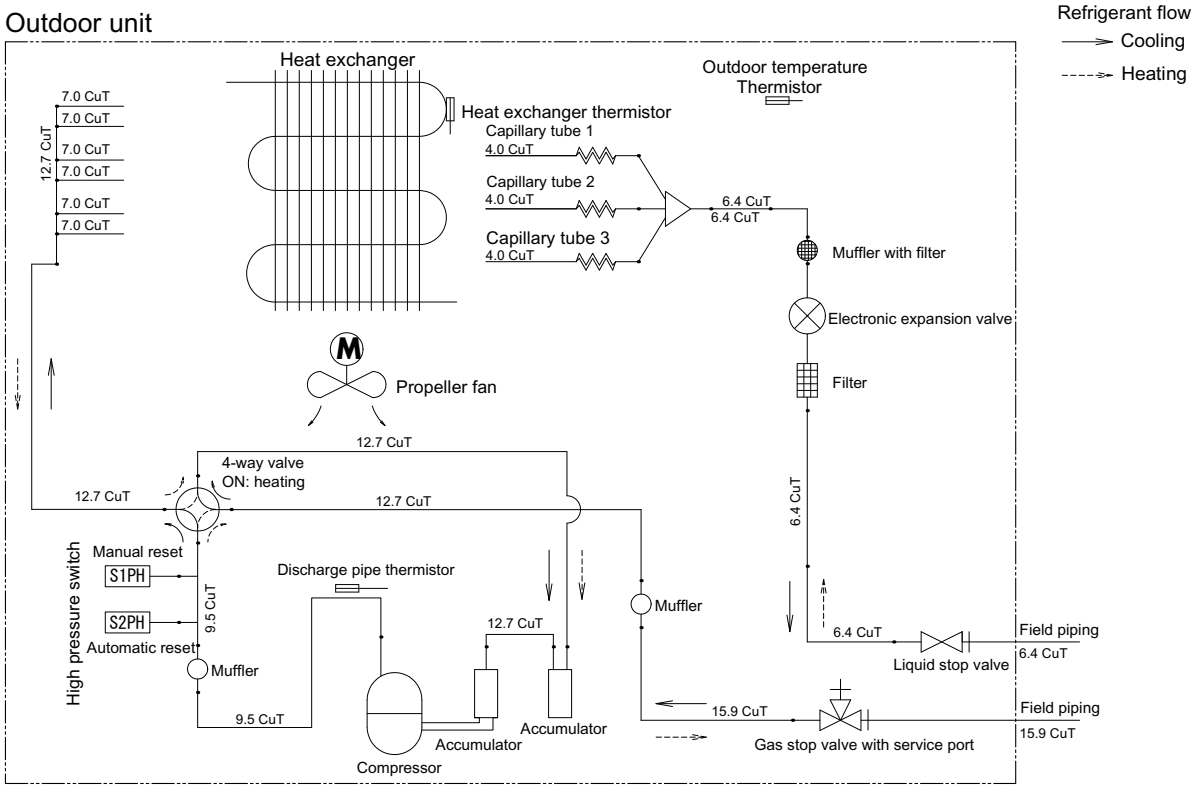

3D100850D

8 Wiring diagrams

8 - 1 Wiring Diagrams - Single Phase

RXM71N

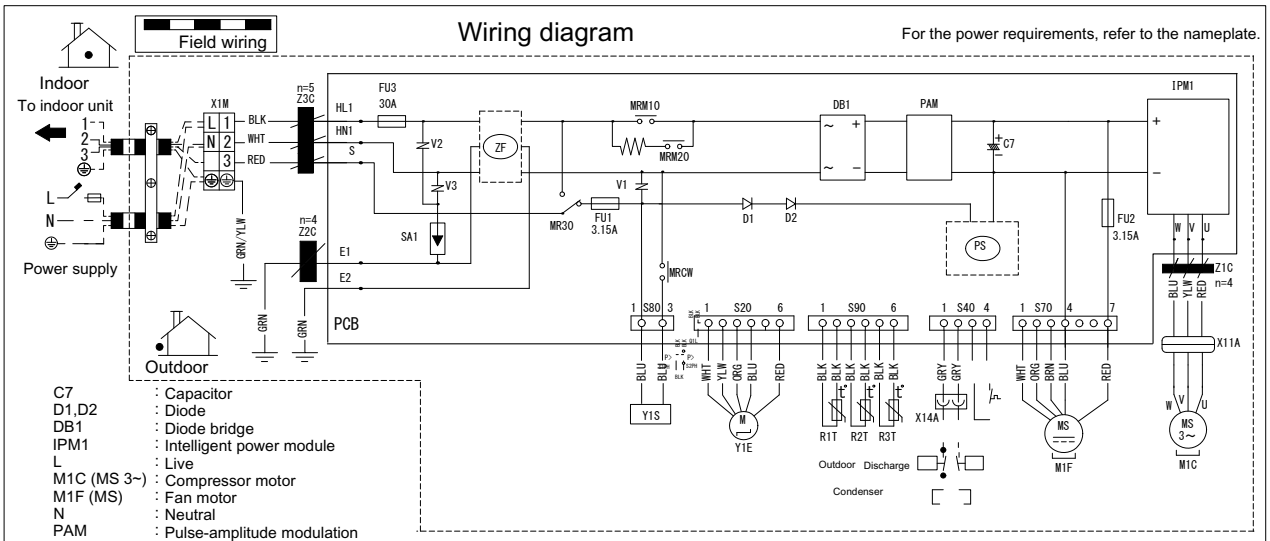

C7	: Capacitor	FU1, FU2, FU3	: Fuse	GRY	: Grey	⊕ : Protective earth
D1,D2	: Diode	MR30, MRM10,		**BLK**	: Black	⏚ : Earth
DB1	: Diode bridge	MRM20, MRCW	: Magnetic relay	WHT	: White	
IPM1	: Intelligent power module	R1T, R2T, R3T	: Thermistor	BRN	: Brown	
L	: Live	S20, S40, S70, S80,		RED	: Red	
M1C (MS 3~)	: Compressor motor	S90, X11A, X14A	: Connector	GRN	: Green	
M1F (MS)	: Fan motor	V1, V2, V3	: Varistor	YLW	: Yellow	
N	: Neutral	Z1C, Z2C, Z3C	: Ferrite core	ORG	: Orange	
PAM	: Pulse-amplitude modulation	HL1, HN1, S,		BLU	: Blue	
PCB	: Printed circuit board	E1, E2, W, V, U	: Connection	n=4, n=5	: Number of passes through ferrite core	
PS	: Switching power supply					
Q1L	: Overload protector					
S1PH,						
S2PH	: High pressure switch					
SA1	: Surge arrestor					
X1M	: Terminal strip					
Y1E (M)	: Electronic expansion valve coil					
Y1S	: Reversing solenoid valve coil					
ZF	: Noise filter					

Notes

1. Size: length 105 X width 185.
2. Refer to purchasing specification AS(Y)303002, unless otherwise specified.

3D100894C

9 Sound data

9 - 1 Sound Pressure Spectrum

RXM71N

Cooling mode

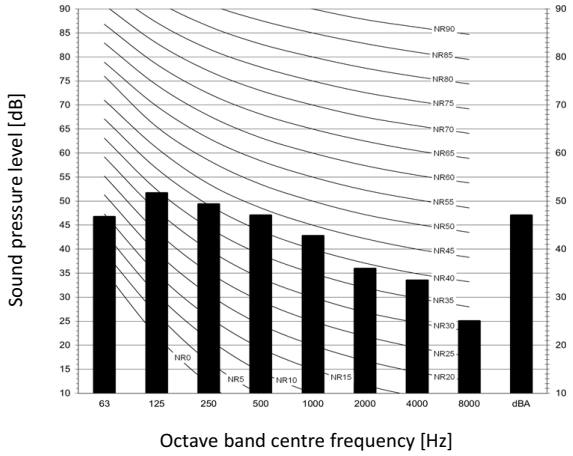

Heating mode

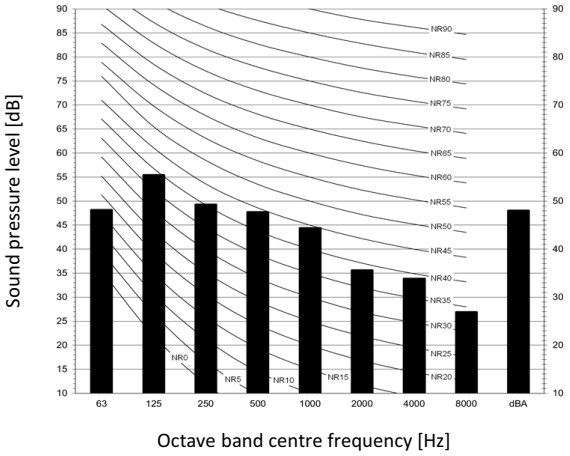

Cooling

Total dB

A	B
dBA	47

Heating

Total dB

A	B
dBA	48

Legend

dBA = A-weighted sound pressure level (A scale according to IEC).

A Scale

B ■ Fan speed: High

□ Fan speed: Low

Location of microphone

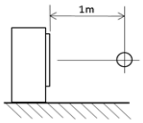

Notes

1. Background noise already taken into account.
2. Operating conditions: power source 220-240 V/220 V 50/60 Hz; JIS standard
3. Operating noise varies depending on operation and ambient conditions.
4. The operation noise measuring method is in accordance with JISC9612.
5. Measuring location: anechoic chamber

3D105011A

10 Operation range

10 - 1 Operation Range

10

RXM71N

Cooling

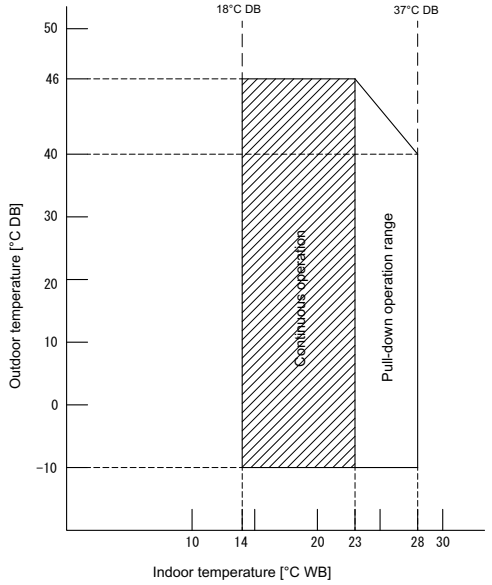

Heating

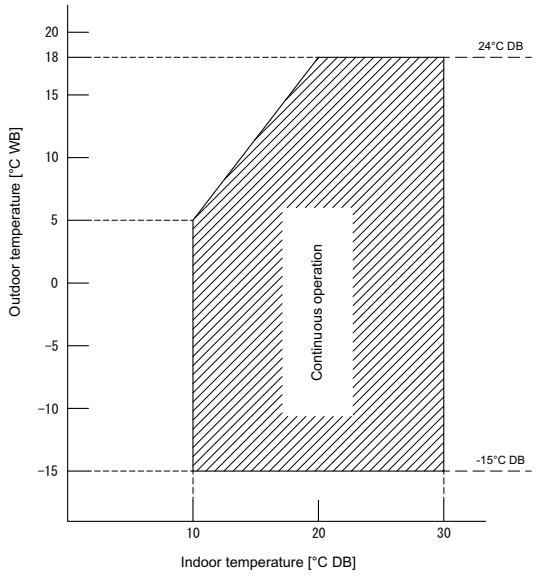

Notes

1. The graphs is based on the following conditions.
   Corresponding refrigerant piping length: 5 m
   Level difference: 0m
   Air flow rate High

3D120207

Daikin Europe N.V. Naamloze Vennootschap - Zandvoordestraat 300, B-8400 Oostende - Belgium - www.daikin.eu - BE 0412 120 336 - RPR Oostende

MIX
Paper from responsible sources
FSC® C109049

EEDEN19 **01/19**

The present leaflet is drawn up by way of information only and does not constitute an offer binding upon Daikin Europe N.V.. Daikin Europe N.V. has compiled the content of this leaflet to the best of its knowledge. No express or implied warranty is given for the completeness, accuracy, reliability or fitness for particular purpose of its content and the products and services presented therein. Specifications are subject to change without prior notice. Daikin Europe N.V. explicitly rejects any liability for any direct or indirect damage, in the broadest sense, arising from or related to the use and/or interpretation of this leaflet. All content is copyrighted by Daikin Europe N.V.