DAIKIN

INSTALLATION AND OPERATION MANUAL

VRV IV System Air Conditioner

RXYQQ8T7Y1B
RXYQQ10T7Y1B
RXYQQ12T7Y1B
RXYQQ14T7Y1B
RXYQQ16T7Y1B
RXYQQ18T7Y1B
RXYQQ20T7Y1B

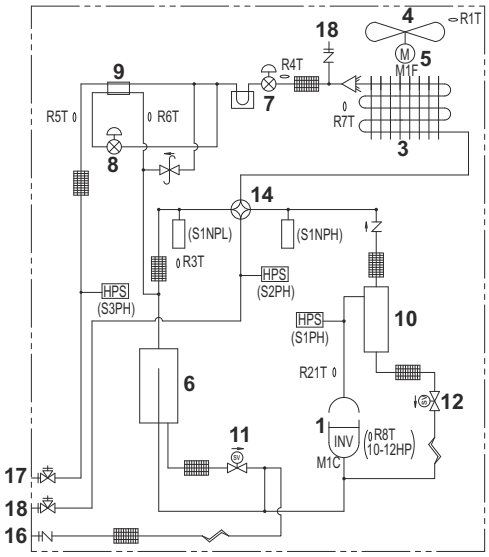
R1T
4
18
5
M1F
R4T
9
7
R5T
R6T
R7T
8
3
14
(S1NPL)
(S1NPH)
R3T
HPS
(S3PH)
HPS
(S2PH)
HPS
(S1PH)
10
R21T
6
12
1
INV
R8T
(10-12HP)
M1C
11
17
18
16

1

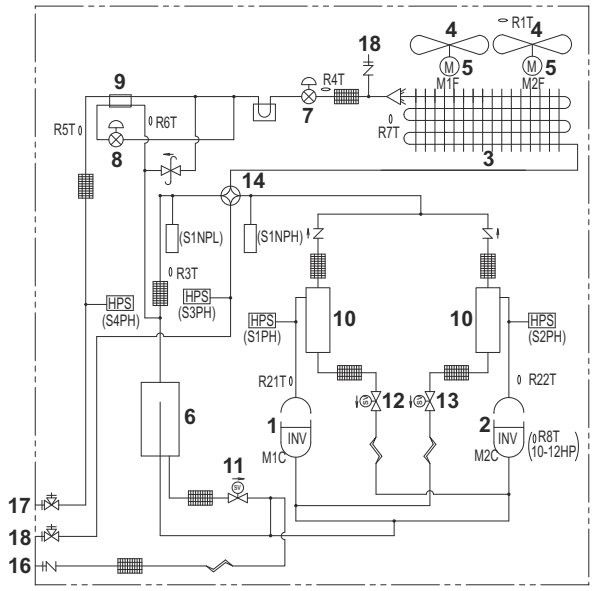
R1T
4
4
18
5
M1F
5
M2F
R4T
9
7
R5T
R6T
R7T
8
3
14
(S1NPL)
(S1NPH)
R3T
HPS
(S4PH)
HPS
(S3PH)
HPS
(S1PH)
10
10
HPS
(S2PH)
R21T
R22T
6
12
13
1
INV
M1C
2
INV
M2C
R8T
(10-12HP)
11
17
18
16

2

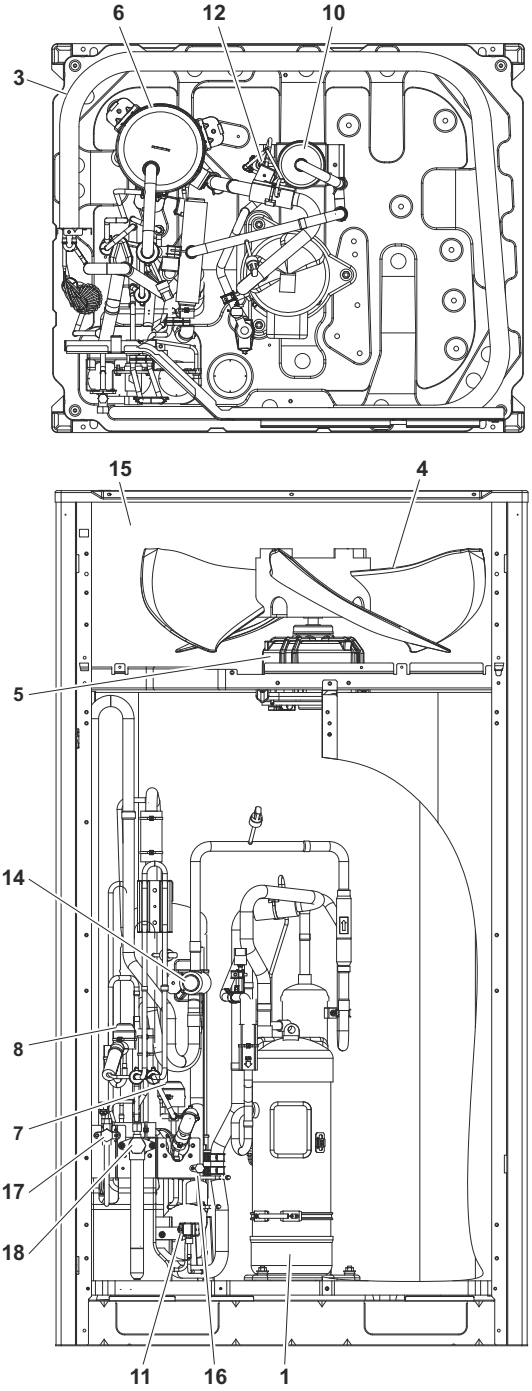
6
12
10
3
15
4
5
14
8
7
17
18
11
16
1

3

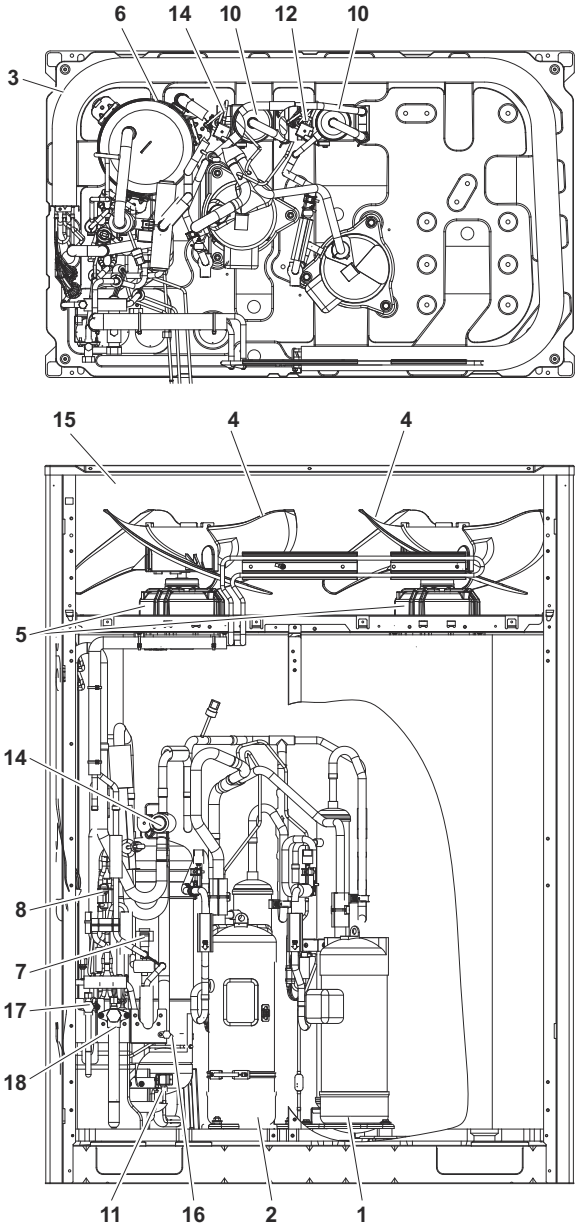
6
14
10
12
10
3
15
4
4
5
14
8
7
17
18
11
16
2
1

4

CE - DECLARATION-OF-CONFORMITY
CE - KONFORMITÄTSERKLÄRUNG
CE - DECLARATION-DE-CONFORMITE
CE - CONFORMITEITSVERKLARING
CE - DECLARACION-DE-CONFORMIDAD
CE - DICHIARAZIONE-DI-CONFORMITA
CE - ΔΗΛΩΣΗ ΣΥΜΜΟΡΦΩΣΗΣ
CE - DECLARAÇÃO-DE-CONFORMIDADE
CE - ЗАЯВЛЕНИЕ-О-СООТВЕТСТВИИ
CE - OVERENSSTEMMELSESERKLÆRING
CE - FÖRSÄKRAN-OM-ÖVERENSTÄMMELSE
CE - ERKLÆRING OM-SAMSVAR
CE - ILMOITUS-YHDENMUKAISUUDESTA
CE - PROHLÁŠENÍ-O-SHODĚ
CE - IZJAVA-O-USKLAĐENOSTI
CE - MEGFELELŐSÉGI-NYILATKOZAT
CE - DEKLARACJA-ZGODNOŚCI
CE - DECLARAŢIE-DE-CONFORMITATE
CE - IZJAVA O SKLADNOSTI
CE - VASTAVUSDEKLARATSIOON
CE - ДЕКЛАРАЦИЯ-ЗА-СЪОТВЕТСТВИЕ
CE - ATITIKTIES-DEKLARACIJA
CE - ATBILSTĪBAS-DEKLARĀCIJA
CE - VYHLÁSENIE-ZHODY
CE - UYGUNLUK-BEYANI

Daikin Europe N.V.

01 (GB) declares under its sole responsibility that the air conditioning models to which this declaration relates:
02 (D) erklärt auf seine alleinige Verantwortung daß die Modelle der Klimageräte für die diese Erklärung bestimmt ist:
03 (F) déclare sous sa seule responsabilité que les appareils d'air conditionné visés par la présente déclaration:
04 (NL) verklaart hierbij op eigen exclusieve verantwoordelijkheid dat de airconditioning units waarop deze verklaring betrekking heeft:
05 (E) declara baja su única responsabilidad que los modelos de aire acondicionado a los cuales hace referencia la declaración:
06 (I) dichiara sotto sua responsabilità che i condizionatori modello a cui è riferita questa dichiarazione:
07 (GR) δηλώνει με αποκλειστική της ευθύνη ότι τα μοντέλα των κλιματιστικών συσκευών στα οποία αναφέρεται η παρούσα δήλωση:
08 (P) declara sob sua exclusiva responsabilidade que os modelos de ar condicionado a que esta declaração se refere:
09 (RUS) заявляет, исключительно под свою ответственность, что модели кондиционеров воздуха, к которым относится настоящее заявление:
10 (DK) erklærer under eneansvar, at klimaanlægmodellerne, som denne deklaration vedrører:
11 (S) deklarerar i egenskap av huvudansvarig, att luftkonditioneringsmodellerna som berörs av denna deklaration innebär att:
12 (N) erklærer et fullstendig ansvar for at de luftkondisjoneringsmodeller som berøres av denne deklarasjonen, innebærer at:
13 (FIN) ilmoittaa yksinomaan omalla vastuullaan, että tämän ilmoituksen tarkoittamat ilmastointilaitteiden mallit:
14 (CZ) prohlašuje ve své plné odpovědnosti, že modely klimatizace, k nimž se toto prohlášení vztahuje:
15 (HR) izjavljuje pod isključivo vlastitom odgovornošću da su modeli klima uređaja na koje se ova izjava odnosi:
16 (H) teljes felelőssége tudatában kijelenti, hogy a klímaberendezés modellek, melyekre e nyilatkozat vonatkozik:
17 (PL) deklaruje na własną i wyłączną odpowiedzialność, że modele klimatyzatorów, których dotyczy niniejsza deklaracja:
18 (RO) declară pe proprie răspundere că aparatele de aer condiţionat la care se referă această declaraţie:
19 (SLO) z vso odgovornostjo izjavlja, da so modeli klimatskih naprav, na katere se izjava nanaša:
20 (EST) kinnitab oma täielikul vastutusel, et käesoleva deklaratsiooni alla kuuluvad kliimaseadmete mudelid:
21 (BG) декларира на своя отговорност, че моделите климатична инсталация, за които се отнася тази декларация:
22 (LT) visiška savo atsakomybe skelbia, kad oro kondicionavimo prietaisų modeliai, kuriems yra taikoma ši deklaracija:
23 (LV) ar pilnu atbildību apliecina, ka tālák uzskaitīto modeļu gaisa kondicionētāji, uz kuriem attiecas šī deklarācija:
24 (SK) vyhlasuje na vlastnú zodpovednosť, že tieto klimatizačné modely, na ktoré sa vzťahuje toto vyhlásenie:
25 (TR) tamamen kendi sorumluluğunda olmak üzere bu bildirinin ilgili olduğu klima modellerinin aşağıdaki gibi olduğunu beyan eder:

RXYQQ8T7Y1B*, RXYQQ10T7Y1B*, RXYQQ12T7Y1B*, RXYQQ14T7Y1B*, RXYQQ16T7Y1B*, RXYQQ18T7Y1B*, RXYQQ20T7Y1B*,

* = , , 1, 2, 3, ..., 9

01 are in conformity with the following standard(s) or other normative document(s), provided that these are used in accordance with our instructions:
02 der/den folgenden Norm(en) oder einem anderen Normdokument oder -dokumenten entspricht/entsprechen, unter der Voraussetzung, daß sie gemäß unseren Anweisungen eingesetzt werden:
03 sont conformes à la/aux norme(s) ou autre(s) document(s) normatif(s), pour autant qu'ils soient utilisés conformément à nos instructions:
04 conform de volgende norm(en) of één of meer andere bindende documenten zijn, op voorwaarde dat ze worden gebruikt overeenkomstig onze instructies:
05 están en conformidad con la(s) siguiente(s) norma(s) u otro(s) documento(s) normativo(s), siempre que sean utilizados de acuerdo con nuestras instrucciones:
06 sono conformi al(i) seguente(i) standard(s) o altro(i) documento(i) a carattere normativo, a patto che vengano usati in conformità alle nostre istruzioni:
07 είναι σύμφωνα με το(α) ακόλουθο(α) πρότυπο(α) ή άλλο έγγραφο(α) κανονισμών, υπό την προϋπόθεση ότι χρησιμοποιούνται σύμφωνα με τις οδηγίες μας:
08 estão em conformidade com a(s) seguinte(s) norma(s) ou outro(s) documento(s) normativo(s), desde que estes sejam utilizados de acordo com as nossas instruções:
09 соответствуют следующим стандартам или другим нормативным документам, при условии их использования согласно нашим инструкциям:
10 overholder følgende standard(er) eller andet/andre retningsgivende dokument(er), forudsat at disse anvendes i henhold til vore instrukser:
11 respektive utrustning är utförd i överensstämmelse med och följer följande standard(er) eller andra normgivande dokument, under förutsättning att användning sker i överensstämmelse med våra instruktioner:
12 respektive utstyr er i overensstemmelse med følgende standard(er) eller andre normgivende dokument(er), under forutsetning av at disse brukes i henhold til våre instrukser:
13 vastaavat seuraavien standardien ja muiden ohjeellisten dokumenttien vaatimuksia edellyttäen, että niitä käytetään ohjeidemme mukaisesti:
14 za předpokladu, že jsou využívány v souladu s našimi pokyny, odpovídají následujícím normám nebo normativním dokumentům:
15 u skladu sa slijedećim standardom(ima) ili drugim normativnim dokumentom(ima), uz uvjet da se oni koriste u skladu s našim uputama:
16 megfelelnek az alábbi szabvány(ok)nak vagy egyéb irányadó dokumentum(ok)nak, ha azokat előírás szerint használják:
17 spełniają wymogi następujących norm i innych dokumentów normalizacyjnych, pod warunkiem że używane są zgodnie z naszymi instrukcjami:
18 sunt în conformitate cu următorul (următoarele) standard(e) sau alt(e) document(e) normativ(e), cu condiţia ca acestea să fie utilizate în conformitate cu instrucţiunile noastre:
19 skladni z naslednjimi standardi in drugimi normativi, pod pogojem, da se uporabljajo v skladu z našimi navodili:
20 on vastavuses järgmis(t)e standardi(te)ga või teiste normatiivsete dokumentidega, kui neid kasutatakse vastavalt meie juhenditele:
21 съответстват на следните стандарти или други нормативни документи, при условие, че се използват съгласно нашите инструкции:
22 atitinka žemiau nurodytus standartus ir (arba) kitus norminius dokumentus su sąlyga, kad yra naudojami pagal mūsų nurodymus:
23 tad, ja lietoti atbilstoši ražotāja norādījumiem, atbilst sekojošiem standartiem un citiem normatīviem dokumentiem:
24 sú v zhode s nasledovnou(ými) normou(ami) alebo iným(i) normatívnym(i) dokumentom(ami), za predpokladu, že sa používajú v súlade s našim návodom:
25 ürünün, talimatlarımıza göre kullanılması koşuluyla aşağıdaki standartlar ve norm belirten belgelerle uyumludur:

EN60335-2-40,

01 following the provisions of:
02 gemäß den Vorschriften der:
03 conformément aux stipulations des:
04 overeenkomstig de bepalingen van:
05 siguiendo las disposiciones de:
06 secondo le prescrizioni per:
07 με τήρηση των διατάξεων των:
08 de acordo com o previsto em:
09 в соответствии с положениями:
10 under iagttagelse af bestemmelseme i:
11 enligt villkoren i:
12 gitt i henhold til bestemmelsene i:
13 noudattaen määräyksiä:
14 za dodržení ustanovení předpisu:
15 prema odredbama:
16 követi a(z):
17 zgodnie z postanowieniami Dyrektyw:
18 în urma prevederilor:
19 ob upoštevanju določb:
20 vastavalt nõuetele:
21 следвайки клаузите на:
22 laikantis nuostatų, pateikiamų:
23 ievērojot prasības, kas noteiktas:
24 održiavajúc ustanovenia:
25 bunun koşullarına uygun olarak:

Machinery 2006/42/EC ***
Electromagnetic Compatibility 2004/108/EC *
Pressure Equipment 97/23/EC **

01 Directives, as amended.
02 Direktiven, gemäß Änderung.
03 Directives, telles que modifiées.
04 Richtlijnen, zoals geamendeerd.
05 Directivas, según lo enmendado.
06 Direttive, come da modifica.
07 Οδηγιών, όπως έχουν τροποποιηθεί.
08 Directivas, conforme alteração em.
09 Директив со всеми поправками.
10 Direktiver, med senere ændringer.
11 Direktiv, med företagna ändringar.
12 Direktiver, med foretatte endringer.
13 Direktiivejä, sellaisina kuin ne ovat muutettuina.
14 v platném znění.
15 Smjernice, kako je izmijenjeno.
16 irányelv(ek) és módosításaik rendelkezéseit.
17 z późniejszymi poprawkami.
18 Directivelor, cu amendamentele respective.
19 Direktive z vsemi spremembami.
20 Direktiivid koos muudatustega.
21 Директиви, с техните изменения.
22 Direktyvose su papildymais.
23 Direktīvās un to papildinājumos.
24 Smernice, v platnom znení.
25 Değiştirilmiş halleriyle Yönetmelikler.

01 * as set out in <A> and judged positively by <B> according to the **Certificate** <C>.
** as set out in the Technical Construction File <D> and judged positively by <E> (Applied module <F>). <G>. Risk category <H>. Also refer to next page.
02 * wie in <A> aufgeführt und von <B> positiv beurteilt gemäß **Zertifikat** <C>.
** wie in der Technischen Konstruktionsakte <D> aufgeführt und von <E> (Angewandtes Modul <F>) positiv ausgezeichnet. <G>. Risikoart <H>. Siehe auch nächste Seite.
03 * tel que défini dans <A> et évalué positivement par <B> conformément au **Certificat** <C>.
** tel que stipulé dans le Fichier de Construction Technique <D> et jugé positivement par <E> (Module appliqué <F>). <G>. Catégorie de risque <H>. Se reporter également à la page suivante.
04 * zoals vermeld in <A> en positief beoordeeld door <B> overeenkomstig **Certificaat** <C>.
** zoals vermeld in het Technisch Constructiedossier <D> en in orde bevonden door <E> (Toegepaste module <F>). <G>. Risicocategorie <H>. Zie ook de volgende pagina.
05 * como se establece en <A> y es valorado positivamente por <B> de acuerdo con el **Certificado** <C>.
** tal como se expone en el Archivo de Construcción Técnica <D> y juzgado positivamento por <E> (Modulo aplicado <F>). <G>. Categoría de riesgo <H>. Consulte también la siguiente página.
06 * delineato nel <A> e giudicato positivamente da <B> secondo il **Certificato** <C>.
** delineato nel File Tecnico di Costruzione <D> e giudicato positivamente da <E> (Modulo <F> applicato). <G>. Categoria di rischio <H>. Fare riferimento anche alla pagina successiva.
07 * όπως καθορίζεται στο <A> και κρίνεται θετικά από το <B> σύμφωνα με το **Πιστοποιητικό** <C>.
** όπως προσδιορίζεται στο Αρχείο Τεχνικής Κατασκευής <D> και κρίνεται θετικά από το <E> (Χρησιμοποιούμενη υπομονάδα <F>). <G>. Κατηγορία επικινδυνότητας <H>. Ανατρέξτε επίσης στην επόμενη σελίδα.
08 * tal como estabelecido em <A> e com o parecer positivo de <B> de acordo com o **Certificado** <C>.
** tal como estabelecido no Ficheiro Técnico de Construção <D> e com o parecer positivo de <E> (Módulo aplicado <F>). <G>. Categoria de risco <H>. Consultar também a página seguinte.
09 * как указано в <A> и в соответствии с положительным решением <B> согласно **Свидетельству** <C>.
** как указано в Досье технического топкования <D> и в соответствии с положительным решением <E> (Прикладной модуль <F>). <G>. Категория риска <H>. Также смотрите следующую страницу.
10 * som anført i <A> og positivt vurderet af <B> i henhold til **Certifikat** <C>.
** som anført i den Tekniske Konstruktionsfil <D> og positivt vurderet af <E> (Anvendt modul <F>). <G>. Risikoklasse <H>. Se også næste side.
11 * enligt <A> och godkänts av <B> enligt **Certifikatet** <C>.
** i enlighet med den Tekniska Konstruktionsfilen <D> som positivt intygats av <E> (Fastsatt modul <F>). <G>. Riskkategori <H>. Se även nästa sida.
12 * som det fremkommer i <A> og gjennom positiv bedømmelse av <B> ifølge **Sertifikat** <C>.
** som det fremkommer i den Tekniske Konstruksjonsfilen <D> og gjennom positiv bedømmelse av <E> (Anvendt modul <F>). <G>. Risikokategori <H>. Se også neste side.
13 * jotka on esitetty asiakirjassa <A> ja jotka <B> on hyväksynyt **Sertifikaatin** <C> mukaisesti.
** jotka on esitetty Teknisessä Asiakirjassa <D> ja jotka <E> on hyväksynyt (Sovellettu moduli <F>). <G>. Vaaraluokka <H>. Katso myös seuraava sivu.
14 * jak bylo uvedeno v <A> a pozitivně zjištěno <B> v souladu s **osvědčením** <C>.
** jak bylo uvedeno v souboru technické konstrukce <D> a pozitivně zjištěno <E> (použitý modul <F>). <G>. Kategorie rizik <H>. Viz také následující strana.
15 * kako je izloženo u <A> i pozitivno ocijenjeno od strane <B> prema **Certifikatu** <C>.
** kako je izloženo u Datoteci o tehničkoj konstrukciji <D> i pozitivno ocijenjeno od strane <E> (Primijenjen modul <F>). <G>. Kategorija opasnosti <H>. Također pogledajte na slijedećoj stranici.
16 * a(z) <A> alapján, a(z) <B> igazolta a megfelelést, a(z) **<C> tanúsítvány** szerint.
** a(z) <D> műszaki konstrukciós dokumentáció alapján, a(z) <E> igazolta a megfelelést (alkalmazott modul: <F>). <G>. Veszélyességi kategória <H>. Lásd még a következő oldalon.
17 * zgodnie z dokumentacją <A>, pozytywną opinią <B> i **Świadectwem** <C>.
** zgodnie z archiwalną dokumentacją konstrukcyjną <D> i pozytywną opinią <E> (Zastosowany moduł <F>). <G>. Kategoria zagrożenia <H>. Patrz także następna strona.
18 * aşa cum este stabilit în <A> şi apreciat pozitiv de <B> în conformitate cu **Certificatul** <C>.
** conform celor stabilite în Dosarul tehnic de construcţie <D> şi apreciate pozitiv de <E> (Modul aplicat <F>). <G>. Categorie de risc <H>. Consultaţi de asemenea pagina următoare.
19 * kot je določeno v <A> in odobreno s strani <B> v skladu s **certifikatom** <C>.
** kot je določeno v tehnični mapi <D> in odobreno s strani <E> (Uporabljen modul <F>). <G>. Kategorija tveganja <H>. Glejte tudi na naslednji strani.
20 * nagu on näidatud dokumendis <A> ja heaks kiidetud <B> järgi vastavalt **sertifikaadile** <C>.
** nagu on näidatud tehnilises dokumentatsioonis <D> ja heaks kiidetud <E> järgi (lisamoodul <F>). <G>. Riskikategooria <H>. Vaadake ka järgmist lehekülge.
21 * както е изложено в <A> и оценено положително от <B> съгласно **Сертификата** <C>.
** както е заложено в Акта за техническа конструкция <D> и оценено положително от <E> (Приложен модул <F>). <G>. Категория риск <H>. Вижте също на следващата страница.
22 * kaip nustatyta <A> ir kaip teigiamai nuspręsta <B> pagal **Sertifikatą** <C>.
** kaip nurodyta Techninėje konstrukcijos byloje <D> ir patvirtinta <E> (taikomas modulis <F>). <G>. Rizikos kategorija <H>. Taip pat žiūrėkite ir kitą puslapį.
23 * kā norādīts <A> un atbilstoši <B> pozitīvajam vērtējumam saskaņā ar **sertifikātu** <C>.
** kā noteikts tehniskajā dokumentācijā <D>, atbilstoši <E> pozitīvajam lēmumam (piekritīgā sadaļa: <F>). <G>. Riska kategorija <H>. Skat. arī nākošo lappusi.
24 * ako bolo uvedené v <A> a pozitívne zistené <B> v súlade s **osvedčením** <C>.
** ako je to stanovené v Súbore technickej konštrukcie <D> a kladne posúdené <E> (Aplikovaný modul <F>). <G>. Kategória nebezpečia <H>. Viď tiež nasledovnú stranu.
25 * <A>'da belirtildiği gibi ve <C> **Sertifikasına** göre <B> tarafından olumlu olarak değerlendirildiği gibi.
** <D> Teknik Yapı Dosyasında belirtildiği gibi ve <E> tarafından olumlu olarak (Uygulanan modül <F>) değerlendirilmiştir. <G>. Risk kategorisi <H>. Ayrıca bir sonraki sayfaya bakın.

<A>	DAIKIN.TCF.030A3/03-2013
<B>	TÜV (NB1856)
<C>	12080901.T30
<D>	Daikin.TCFP.001
<E>	AIB Vinçotte (NB0026)
<F>	D1
<G>	—
<H>	II

2P329110-3C

01 *** Daikin Europe N.V. is authorised to compile the Technical Construction File.
02 *** Daikin Europe N.V. hat die Berechtigung die Technische Konstruktionsakte zusammenzustellen.
03 *** Daikin Europe N.V. est autorisé à compiler le Dossier de Construction Technique.
04 *** Daikin Europe N.V. is bevoegd om het Technisch Constructiedossier samen te stellen.
05 *** Daikin Europe N.V. está autorizado a compilar el Archivo de Construcción Técnica.
06 *** Daikin Europe N.V. è autorizzata a redigere il File Tecnico di Costruzione.
07 *** Η Daikin Europe N.V. είναι εξουσιοδοτημένη να συντάξει τον Τεχνικό φάκελο κατασκευής.
08 *** A Daikin Europe N.V. está autorizada a compilar a documentação técnica de fabrico.
09 *** Компания Daikin Europe N.V. уполномочена составить Комплект технической документации.
10 *** Daikin Europe N.V. er autoriseret til at udarbejde de tekniske konstruktionsdata.
11 *** Daikin Europe N.V. är bemyndigade att sammanställa den tekniska konstruktionsfilen.
12 *** Daikin Europe N.V. har tillatelse til å kompilere den Tekniske konstruksjonsfilen.
13 *** Daikin Europe N.V. on valtuutettu laatimaan Teknisen asiakirjan.
14 *** Společnost Daikin Europe N.V. má oprávnění ke kompilaci souboru technické konstrukce.
15 *** Daikin Europe N.V. je ovlašten za izradu Datoteke o tehničkoj konstrukciji.
16 *** A Daikin Europe N.V. jogosult a műszaki konstrukciós dokumentáció összeállítására.
17 *** Daikin Europe N.V. ma upoważnienie do zbierania i opracowywania dokumentacji konstrukcyjnej.
18 *** Daikin Europe N.V. este autorizat să compileze Dosarul tehnic de construcţie.
19 *** Daikin Europe N.V. je pooblaščen za sestavo datoteke s tehnično mapo.
20 *** Daikin Europe N.V. on volitatud koostama tehnilist dokumentatsiooni.
21 *** Daikin Europe N.V. е оторизирана да състави Акта за техническа конструкция.
22 *** Daikin Europe N.V. yra įgaliota sudaryti šį techninės konstrukcijos failą.
23 *** Daikin Europe N.V. ir autorizēts sastādīt tehnisko dokumentāciju.
24 *** Spoločnosť Daikin Europe N.V. je oprávnená vytvoriť súbor technickej konštrukcie.
25 *** Daikin Europe N.V. Teknik Yapı Dosyasını derlemeye yetkilidir.

CE - DECLARATION-OF-CONFORMITY
CE - KONFORMITÄTSERKLÄRUNG
CE - DECLARATION-DE-CONFORMITE
CE - CONFORMITEITSVERKLARING
CE - DECLARACION-DE-CONFORMIDAD
CE - DICHIARAZIONE-DI-CONFORMITA
CE - ΔΗΛΩΣΗ ΣΥΜΜΟΡΦΩΣΗΣ
CE - DECLARAÇÃO-DE-CONFORMIDADE
CE - ЗАЯВЛЕНИЕ-О-СООТВЕТСТВИИ
CE - OVERENSSTEMMELSESERKLÆRING
CE - FÖRSÄKRAN-OM-ÖVERENSTÄMMELSE
CE - ERKLÆRING OM-SAMSVAR
CE - ILMOITUS-YHDENMUKAISUUDESTA
CE - PROHLÁŠENÍ-O-SHODĚ
CE - IZJAVA-O-USKLAĐENOSTI
CE - MEGFELELŐSÉGI-NYILATKOZAT
CE - DEKLARACJA-ZGODNOŚCI
CE - DECLARAŢIE-DE-CONFORMITATE
CE - IZJAVA O SKLADNOSTI
CE - VASTAVUSDEKLARATSIOON
CE - ДЕКЛАРАЦИЯ-ЗА-СЪОТВЕТСТВИЕ
CE - ATITIKTIES-DEKLARACIJA
CE - ATBILSTĪBAS-DEKLARĀCIJA
CE - VYHLÁSENIE-ZHODY
CE - UYGUNLUK-BEYANI

01 (GB) continuation of previous page:
02 (D) Fortsetzung der vorherigen Seite:
03 (F) suite de la page précédente:
04 (NL) vervolg van vorige pagina:
05 (E) continuación de la página anterior:
06 (I) continua dalla pagina precedente:
07 (GR) συνέχεια από την προηγούμενη σελίδα:
08 (P) continuação da página anterior:
09 (RUS) продолжение предыдущей страницы:
10 (DK) fortsat fra forrige side:
11 (S) fortsättning från föregående sida:
12 (N) fortsettelse fra forrige side:
13 (FIN) jatkoa edellisellä sivulta:
14 (CZ) pokračování z předchozí strany:
15 (HR) nastavak s prethodne stranice:
16 (H) folytatás az előző oldalról:
17 (PL) ciąg dalszy z poprzedniej strony:
18 (RO) continuarea paginii anterioare:
19 (SLO) nadaljevanje s prejšnje strani:
20 (EST) eelmise leheküljе järg:
21 (BG) продължение от предходната страница:
22 (LT) ankstesnio puslapio tęsinys:
23 (LV) iepriekšējās lappuses turpinājums:
24 (SK) pokračovanie z predchádzajúcej strany:
25 (TR) önceki sayfadan devam:

01 Design Specifications of the models to which this declaration relates:
02 Konstruktionsdaten der Modelle auf die sich diese Erklärung bezieht:
03 Spécifications de conception des modèles auxquels se rapporte cette déclaration:
04 Ontwerpspecificaties van de modellen waarop deze verklaring betrekking heeft:
05 Especificaciones de diseño de los modelos a los cuales hace referencia esta declaración:
06 Specifiche di progetto dei modelli cui fa riferimento la presente dichiarazione:
07 Προδιαγραφές Σχεδιασμού των μοντέλων με τα οποία σχετίζεται η δήλωση:
08 Especificações de projecto dos modelos a que se aplica esta declaração:
09 Проектные характеристики моделей, к которым относится настоящее заявление:
10 Typespecifikationer for de modeller, som denne erklæring vedrører:
11 Designspecifikationer för de modeller som denna deklaration gäller:
12 Konstruksjonsspesifikasjoner for de modeller som berøres av denne deklarasjonen:
13 Tätä ilmoitusta koskevien mallien rakennemäärittely:
14 Specifikace designu modelů, ke kterým se vztahuje toto prohlášení:
15 Specifikacije dizajna za modele na koje se ova izjava odnosi:
16 A jelen nyilatkozat tárgyát képező modellek tervezési jellemzői:
17 Specyfikacje konstrukcyjne modeli, których dotyczy deklaracja:
18 Specificaţiile de proiectare ale modelelor la care se referă această declaraţie:
19 Specifikacije tehničnega načrta za modele, na katere se nanaša ta deklaracija:
20 Deklaratsiooni alla kuuluvate mudelite disainispetsifikatsioonid:
21 Проектни спецификации на моделите, за които се отнася декларацията:
22 Konstrukcinės specifikacijos modelių, kurie susiję su šia deklaracija:
23 To modeļu dizaina specifikācijas, uz kurām attiecas šī deklarācija:
24 Konštrukčné špecifikácie modelu, ktorého sa týka toto vyhlásenie:
25 Bu bildirinin ilgili olduğu modellerin Tasarım Özellikleri:

01 • Maximum allowable pressure (PS): **<K>** (bar)
• Minimum/maximum allowable temperature (TS*):
* TSmin: Minimum temperature at low pressure side: **<L>** (°C)
* TSmax: Saturated temperature corresponding with the maximum allowable pressure (PS): **<M>** (°C)
• Refrigerant: **<N>**
• Setting of pressure safety device: **<P>** (bar)
• Manufacturing number and manufacturing year: refer to model nameplate

02 • Maximal zulässiger Druck (PS): **<K>** (Bar)
• Minimal/maximal zulässige Temperatur (TS*):
* TSmin: Mindesttemperatur auf der Niederdruckseite: **<L>** (°C)
* TSmax: Sättigungstemperatur die dem maximal zulässigen Druck (PS) entspricht: **<M>** (°C)
• Kältemittel: **<N>**
• Einstellung der Druck-Schutzvorrichtung: **<P>** (Bar)
• Herstellungsnummer und Herstellungsjahr: siehe Typenschild des Modells

03 • Pression maximale admise (PS): **<K>** (bar)
• Température minimum/maximum admise (TS*):
* TSmin: température minimum côté basse pression: **<L>** (°C)
* TSmax: température saturée correspondant à la pression maximale admise (PS): **<M>** (°C)
• Réfrigérant: **<N>**
• Réglage du dispositif de sécurité de pression: **<P>** (bar)
• Numéro de fabrication et année de fabrication: se reporter à la plaquette signalétique du modèle

04 • Maximaal toelaatbare druk (PS): **<K>** (bar)
• Minimaal/maximaal toelaatbare temperatuur (TS*):
* TSmin: Minimumtemperatuur aan lagedrukzijde: **<L>** (°C)
* TSmax: Verzadigde temperatuur die overeenstemt met de maximaal toelaatbare druk (PS): **<M>** (°C)
• Koelmiddel: **<N>**
• Instelling van drukbeveiliging: **<P>** (bar)
• Fabricagenummer en fabricagejaar: zie naamplaat model

05 • Presión máxima admisible (PS): **<K>** (bar)
• Temperatura mínima/máxima admisible (TS*):
* TSmin: Temperatura mínima en el lado de baja presión: **<L>** (°C)
* TSmax: Temperatura saturada correspondiente a la presión máxima admisible (PS): **<M>** (°C)
• Refrigerante: **<N>**
• Ajuste del presostato de seguridad: **<P>** (bar)
• Número de fabricación y año de fabricación: consulte la placa de especificaciones técnicas del modelo

06 • Pressione massima consentita (PS): **<K>** (bar)
• Temperatura minima/massima consentita (TS*):
* TSmin: temperatura minima nel lato di bassa pressione: **<L>** (°C)
* TSmax: temperatura satura corrispondente alla pressione massima consentita (PS): **<M>** (°C)
• Refrigerante: **<N>**
• Impostazione del dispositivo di controllo della pressione: **<P>** (bar)
• Numero di serie e anno di produzione: fare riferimento alla targhetta del modello

07 • Μέγιστη επιτρεπόμενη πίεση (PS): **<K>** (bar)
• Ελάχιστη/μέγιστη επιτρεπόμενη θερμοκρασία (TS*):
* TSmin: Ελάχιστη θερμοκρασία για την πλευρά χαμηλής πίεσης: **<L>** (°C)
* TSmax: Κορεσμένη θερμοκρασία που αντιστοιχεί με τη μέγιστη επιτρεπόμενη πίεση (PS): **<M>** (°C)
• Ψυκτικό: **<N>**
• Ρύθμιση της διάταξης ασφάλειας πίεσης: **<P>** (bar)
• Αριθμός κατασκευής και έτος κατασκευής: ανατρέξτε στην πινακίδα αναγνώρισης του μοντέλου

08 • Pressão máxima permitida (PS): **<K>** (bar)
• Temperaturas mínima e máxima permitidas (TS*):
* TSmin: Temperatura mínima em baixa pressão: **<L>** (°C)
* TSmax: Temperatura de saturação correspondente à pressão máxima permitida (PS): **<M>** (°C)
• Refrigerante: **<N>**
• Regulação do dispositivo de segurança da pressão: **<P>** (bar)
• Número e ano de fabrico: consultar a placa de especificações da unidade

09 • Максимально допустимое давление (PS): **<K>** (бар)
• Минимально/Максимально допустимая температура (TS*):
* TSmin: Минимальная температура на стороне низкого давления: **<L>** (°C)
* TSmax: Температура кипения, соответствующая максимально допустимому давлению (PS): **<M>** (°C)
• Хладагент: **<N>**
• Настройка устройства защиты по давлению: **<P>** (бар)
• Заводской номер и год изготовления: смотрите паспортную табличку модели

10 • Maks. tilladt tryk (PS): **<K>** (bar)
• Min./maks. tilladte temperatur (TS*):
* TSmin: Min. temperatur på lavtrykssiden: **<L>** (°C)
* TSmax: Mættet temperatur svarende til maks. tilladte tryk (PS): **<M>** (°C)
• Kølemiddel: **<N>**
• Indstilling af tryksikringsudstyr: **<P>** (bar)
• Produktionsnummer og fremstillingsår: se modellens fabriksskilt

11 • Maximalt tillåtet tryck (PS): **<K>** (bar)
• Min/max tillåten temperatur (TS*):
* TSmin: Minimumtemperatur på lågtryckssidan: **<L>** (°C)
* TSmax: Mättnadstemperatur som motsvarar maximalt tillåtet tryck (PS): **<M>** (°C)
• Köldmedel: **<N>**
• Inställning för trycksäkerhetsenhet: **<P>** (bar)
• Tillverkningsnummer och tillverkningsår: se modellens namnplåt

12 • Maksimalt tillatt trykk (PS): **<K>** (bar)
• Minimalt/maksimalt tillatt temperatur (TS*):
* TSmin: Minimumstemperatur på lavtrykssiden: **<L>** (°C)
* TSmax: Metningstemperatur i samsvar med maksimalt tillatt trykk (PS): **<M>** (°C)
• Kjølemedium: **<N>**
• Innstilling av sikkerhetsanordning for trykk: **<P>** (bar)
• Produksjonsnummer og produksjonsår: se modellens merkeplate

13 • Suurin sallittu paine (PS): **<K>** (bar)
• Pienin/suurin sallittu lämpötila (TS*):
* TSmin: Alhaisin matalapainepuolen lämpötila: **<L>** (°C)
* TSmax: Suurinta sallittua painetta (PS) vastaava kyllästyslämpötila: **<M>** (°C)
• Kylmäaine: **<N>**
• Varmuuspainelaitteen asetus: **<P>** (bar)
• Valmistusnumero ja valmistusvuosi: katso mallin nimikilpi

14 • Maximální přípustný tlak (PS): **<K>** (bar)
• Minimální/maximální přípustná teplota (TS*):
* TSmin: Minimální teplota na nízkotlaké straně: **<L>** (°C)
* TSmax: Saturovaná teplota odpovídající maximálnímu přípustnému tlaku (PS): **<M>** (°C)
• Chladivo: **<N>**
• Nastavení bezpečnostního tlakového zařízení: **<P>** (bar)
• Výrobní číslo a rok výroby: viz typový štítek modelu

15 • Najveći dopušten tlak (PS): **<K>** (bar)
• Najniža/najviša dopuštena temperatura (TS*):
* TSmin: Najniža temperatura u području niskog tlaka: **<L>** (°C)
* TSmax: Standardna temperatura koja odgovara najvećem dopuštenom tlaku (PS): **<M>** (°C)
• Rashladno sredstvo: **<N>**
• Postavke sigumosne naprave za tlak: **<P>** (bar)
• Proizvodni broj i godina proizvodnje: pogledajte natpisnu pločicu modela

16 • Legnagyobb megengedhető nyomás (PS): **<K>** (bar)
• Legkisebb/legnagyobb megengedhető hőmérséklet (TS*):
* TSmin: Legkisebb megengedhető hőmérséklet a kis nyomású oldalon: **<L>** (°C)
* TSmax: A legnagyobb megengedhető nyomásnak (PS) megfelelő telítettségi hőmérséklet: **<M>** (°C)
• Hűtőközeg: **<N>**
• A túlnyomás-kapcsoló beállítása: **<P>** (bar)
• Gyártási szám és gyártási év: lásd a berendezés adattábláján

17 • Maksymalne dopuszczalne ciśnienie (PS): **<K>** (bar)
• Minimalna/maksymalna dopuszczalna temperatura (TS*):
* TSmin: Minimalna temperatura po stronie niskociśnieniowej: **<L>** (°C)
* TSmax: Temperatura nasycenia odpowiadająca maksymalnemu dopuszczalnemu ciśnieniu (PS): **<M>** (°C)
• Czynnik chłodniczy: **<N>**
• Nastawa ciśnieniowego urządzenia bezpieczeństwa: **<P>** (bar)
• Numer fabryczny oraz rok produkcji: patrz tabliczka znamionowa modelu

18 • Presiune maximă admisibilă (PS): **<K>** (bar)
• Temperatură minimă/maximă admisibilă (TS*):
* TSmin: Temperatură minimă pe partea de presiune joasă: **<L>** (°C)
* TSmax: Temperatură de saturaţie corespunzând presiunii maxime admisibile (PS): **<M>** (°C)
• Agent frigorific: **<N>**
• Reglarea dispozitivului de siguranţă pentru presiune: **<P>** (bar)
• Numărul de fabricaţie şi anul de fabricaţie: consultaţi placa de identificare a modelului

19 • Maksimalni dovoljeni tlak (PS): **<K>** (bar)
• Minimalna/maksimalna dovoljena temperatura (TS*):
* TSmin: Minimalna temperatura na nizkotlačni strani: **<L>** (°C)
* TSmax: Nasičena temperatura, ki ustreza maksimalnemu dovoljenemu tlaku (PS): **<M>** (°C)
• Hladivo: **<N>**
• Nastavljanje varnostne naprave za tlak: **<P>** (bar)
• Tovarniška številka in leto proizvodnje: glejte napisno ploščico

20 • Maksimaalne lubatud surve (PS): **<K>** (bar)
• Minimaalne/maksimaalne lubatud temperatuur (TS*):
* TSmin: Minimaalne temperatuur madalsurve küljel: **<L>** (°C)
* TSmax: Maksimaalsele lubatud survele (PS) vastav küllastunud temperatuur: **<M>** (°C)
• Jahutusaine: **<N>**
• Surve turvaseadme seadistus: **<P>** (bar)
• Tootmisnumber ja tootmisaasta: vaadake mudeli andmeplaati

21 • Максимално допустимо налягане (PS): **<K>** (bar)
• Минимално/максимално допустима температура (TS*):
* TSmin: Минимална температура от страната на ниското налягане: **<L>** (°C)
* TSmax: Температура на насищане, съответстваща на максимално допустимото налягане (PS): **<M>** (°C)
• Охладител: **<N>**
• Настройка на предпазното устройство за налягане: **<P>** (bar)
• Фабричен номер и година на производство: вижте табелката на модела

22 • Maksimalus leistinas slėgis (PS): **<K>** (bar)
• Minimali/maksimali leistina temperatūra (TS*):
* TSmin: Minimali temperatūra žemo slėgio pusėje: **<L>** (°C)
* TSmax: Prisotinta temperatūra, atitinkamti maksimalų leistiną slėgį (PS): **<M>** (°C)
• Šaldymo skystis: **<N>**
• Apsauginio slėgio prietaiso nustatymas: **<P>** (bar)
• Gaminio numeris ir pagaminimo metai: žiūrėkite modelio pavadinimo plokštelę

23 • Maksimālais pieļaujamais spiediens (PS): **<K>** (bar)
• Minimālā/maksimālā pieļaujamā temperatūra (TS*):
* TSmin: Minimālā temperatūra zemā spiediena pusē: **<L>** (°C)
* TSmax: Piesātinātā temperatūra saskaņā ar maksimālo pieļaujamo spiedienu (PS): **<M>** (°C)
• Dzesinātājs: **<N>**
• Spiediena drošības ierīces iestatīšana: **<P>** (bar)
• Izgatavošanas numurs un izgatavošanas gads: skat. modeļa izgatavotājuzņēmuma plāksnītie

24 • Maximálny povolený tlak (PS): **<K>** (bar)
• Minimálna/maximálna povolená teplota (TS*):
* TSmin: Minimálna teplota na nízkotlakovej strane: **<L>** (°C)
* TSmax: Nasýtená teplota korešpondujúca s maximálnym povoleným tlakom (PS): **<M>** (°C)
• Chladivo: **<N>**
• Nastavenie tlakového poistného zariadenia: **<P>** (bar)
• Výrobné číslo a rok výroby: nájdete na výrobnom štítku modelu

25 • İzin verilen maksimum basınç (PS): **<K>** (bar)
• İzin verilen minimum/maksimum sıcaklık (TS*):
* TSmin: Düşük basınç tarafındaki minimum sıcaklık: **<L>** (°C)
* TSmax: İzin verilen maksimum basınca (PS) karşı gelen doyma sıcaklığı: **<M>** (°C)
• Soğutucu: **<N>**
• Basınç emniyet düzeninin ayarı: **<P>** (bar)
• İmalat numarası ve imalat yılı: modelin ünite plakasına bakın

<K>	PS	**40**	**bar**
<L>	TSmin	**–30**	**°C**
<M>	TSmax	**63**	**°C**
<N>		**R410A**	
<P>		**40**	**bar**

01 Name and address of the Notified body that judged positively on compliance with the Pressure Equipment Directive: **<Q>**
02 Name und Adresse der benannten Stelle, die positiv unter Einhaltung der Druckanlagen-Richtlinie urteilte: **<Q>**
03 Nom et adresse de l'organisme notifié qui a évalué positivement la conformité à la directive sur l'équipement de pression: **<Q>**
04 Naam en adres van de aangemelde instantie die positief geoordeeld heeft over de conformiteit met de Richtlijn Drukapparatuur: **<Q>**
05 Nombre y dirección del Organismo Notificado que juzgó positivamente el cumplimiento con la Directiva en materia de Equipos de Presión: **<Q>**
06 Nome e indirizzo dell'Ente riconosciuto che ha riscontrato la conformità alla Direttiva sulle apparecchiature a pressione: **<Q>**
07 Όνομα και διεύθυνση του Κοινοποιημένου οργανισμού που απεφάνθη θετικά για τη συμμόρφωση προς την Οδηγία Εξοπλισμών υπό Πίεση: **<Q>**
08 Nome e morada do organismo notificado, que avaliou favoravelmente a conformidade com a directiva sobre equipamentos pressurizados: **<Q>**
09 Название и адрес органа технической экспертизы, принявшего положительное решение о соответствии Директиве об оборудовании под давлением: **<Q>**
10 Navn og adresse på bemyndiget organ, der har foretaget en positiv bedømmelse af, at udstyret lever op til kravene i PED (Direktiv for Trykbærende Udstyr): **<Q>**
11 Namn och adress för det anmälda organ som godkänt uppfyllandet av tryckutrustningsdirektivet: **<Q>**
12 Navn på og adresse til det autoriserte organet som positivt bedømte samsvar med direktivet for trykkutstyr (Pressure Equipment Directive): **<Q>**
13 Sen ilmoitetun elimen nimi ja osoite, joka teki myönteisen päätöksen painelaitedirektiivin noudattamisesta: **<Q>**
14 Název a adresa informovaného orgánu, který vydal pozitivní posouzení shody se směrnicí o tlakových zařízeních: **<Q>**
15 Naziv i adresa prijavljenog tijela koje je donijelo pozitivnu prosudbu o usklađenosti sa Smjernicom za tlačnu opremu: **<Q>**
16 A nyomástartó berendezésekre vonatkozó irányelvnek való megfelelőséget igazoló bejelentett szervezet neve és címe: **<Q>**
17 Nazwa i adres Jednostki notyfikowanej, która wydała pozytywną opinię dotyczącą spełnienia wymogów Dyrektywy dot. Urządzeń Ciśnieniowych: **<Q>**
18 Denumirea şi adresa organismului notificat care a apreciat pozitiv conformarea cu Directiva privind echipamentele sub presiune: **<Q>**
19 Ime in naslov organa za ugotavljanje skladnosti, ki je pozitivno ocenil združljivost z Direktivo o tlačni opremi: **<Q>**
20 Teavitatud organi, mis hindas Surveseadmete Direktiiviga ühilduvust positiivselt, nimi ja aadress: **<Q>**
21 Наименование и адрес на упълномощения орган, който се е произнесъл положително относно съвместимостта с Директивата за оборудване под налягане: **<Q>**
22 Atsakingos institucijos, kuri davė teigiamą sprendimą pagal slėginės įrangos direktyvą pavadinimas ir adresas: **<Q>**
23 Sertifikācijas institūcijas, kura ir devusi pozitīvu slēdzienu par atbilstību Spiediena iekārtu Direktīvai, nosaukums un adrese: **<Q>**
24 Názov a adresa certifikačného úradu, ktorý kladne posúdil zhodu so smernicou pre tlakové zariadenia: **<Q>**
25 Basınçlı Teçhizat Direktifine uygunluk hususunda olumlu olarak değerlendirilen Onaylanmış kuruluşun adı ve adresi: **<Q>**

<Q>	**AIB VINÇOTTE INTERNATIONAL N.V.** **Diamant Building, A. Reyerslaan 80** **B-1030 Brussels, Belgium**

2P329110-3C

DAIKIN

Jean-Pierre Beuselinck
Director
Ostend, 3rd of June 2013

DAIKIN EUROPE N.V.
Zandvoordestraat 300, B-8400 Oostende, Belgium

Installation manual

Contents

Page

Installation manual 1
1. Definitions 1
1.1. Meaning of warnings and symbols 1
1.2. Meaning of used terms 2
2. General safety precautions 2
3. Introduction 2
3.1. General information 2
3.2. Combination and options 3
3.3. Indoor capacity range 4
3.4. Scope of the manual 4
3.5. Model identification 4
4. Accessories 4
4.1. Accessories supplied with this unit 4
5. Overview of unit 6
5.1. Opening the unit 6
5.2. Main components in the unit 6
5.3. Main components in the electrical component box 7
6. Selecting an installation location 7
6.1. General precautions on installation 7
6.2. Weather related precautions 8
6.3. Selecting a location in cold climates 8
7. Dimensions and service space 9
7.1. Dimensions of outdoor unit 9
7.2. Service space 9
8. Inspecting, handling and unpacking the unit 10
8.1. Inspection 10
8.2. Handling 10
8.3. Unpacking 10
8.4. Installing the unit 10
8.5. Method for removing transportation stay 11
9. Refrigerant pipe size and allowable pipe length 11
9.1. General information 11
9.2. Selection of piping material 11
9.3. Selection of piping size 12
9.4. Selection of refrigerant branch kits 13
9.5. System piping (length) limitations 13
9.6. Multi system piping installation 15
10. Precautions on refrigerant piping 16
10.1. Caution for brazing 16
10.2. Connecting the refrigerant piping 17
10.3. Guidelines for handling stop valve 19
10.4. Leak test and vacuum drying 19
11. Pipe insulation 21
12. Electrical wiring work 21
12.1. Precautions on electrical wiring work 21
12.2. Internal wiring – Parts table 22
12.3. System overview of field wiring 23
12.4. Opening and closing the electrical component box 23
12.5. Requirements 24
12.6. Routing 24
12.7. Connection 27
13. Making field settings 28
13.1. Accessing the push buttons on the logic board 28
13.2. Operating the push buttons and DIP switches on the logic board 29
13.3. Connecting the PC configurator to the outdoor unit 30
14. Charging refrigerant 30
14.1. Precautions 30
14.2. Important information regarding the refrigerant used 31
14.3. Calculating the additional refrigerant charge 31
14.4. Method for adding refrigerant 32
15. Start-up and configuration 36
15.1. Checks before initial start up 36
15.2. Monitoring function and field settings 37
15.3. Energy saving and optimum operation 40
15.4. Test operation 43
15.5. Malfunction code list 44
16. Operation of the unit 46
17. Maintenance and service 46
17.1. Maintenance introduction 46
17.2. Service precautions 46
17.3. Service mode operation 47
18. Caution for refrigerant leaks 47
18.1. Introduction 47
18.2. Maximum concentration level 47
18.3. Procedure for checking maximum concentration 47
19. Disposal requirements 48
20. Unit specifications 48
20.1. General technical specifications 48
20.2. Electrical specifications 49
Operation manual 50

Thank you for purchasing this Daikin VRV IV system.

The original instructions are written in English. All other languages are translations of the original instructions.

CAREFULLY READ THESE INSTRUCTIONS BEFORE INSTALLATION. THEY WILL TELL YOU HOW TO INSTALL AND HOW TO CONFIGURE THE UNIT PROPERLY. KEEP THIS MANUAL IN A HANDY PLACE FOR FUTURE REFERENCE.

1. Definitions

1.1. Meaning of warnings and symbols

Warnings in this manual are classified according to their severity and probability of occurrence.

DANGER

Indicates an imminently hazardous situation which, if not avoided, will result in death or serious injury.

WARNING

Indicates a potentially hazardous situation which, if not avoided, could result in death or serious injury.

CAUTION

Indicates a potentially hazardous situation which, if not avoided, may result in minor or moderate injury. It may also be used to alert against unsafe practices.

NOTICE

Indicates situations that may result in equipment or property-damage accidents only.

INFORMATION

This symbol identifies useful tips or additional information.

Some types of danger are represented by special symbols:

Electric current.

Danger of burning and scalding.

1.2. Meaning of used terms

Installation manual:

Instruction manual specified for a certain product or application, explaining how to install, configure and maintain it.

Operation manual:

Instruction manual specified for a certain product or application, explaining how to operate it.

Maintenance instructions:

Instruction manual specified for a certain product or application, which explains (if relevant) how to install, configure, operate and/or maintain the product or application.

Dealer:

Sales distributor for products as per the subject of this manual.

Installer:

Technical skilled person who is qualified to install products as per the subject of this manual.

User:

Person who is owner of the product and/or operates the product.

Service company:

Qualified company which can perform or coordinate the required service to the unit.

Applicable legislation:

All international, European, national and local directives, laws, regulations and/or codes which are relevant and applicable for a certain product or domain.

Accessories:

Equipment which is delivered with the unit and which needs to be installed according to instructions in the documentation.

Optional equipment:

Equipment which can optionally be combined to the products as per the subject of this manual.

Field supply:

Equipment which needs to be installed according to instructions in this manual, but which are not supplied by Daikin.

2. General safety precautions

The precautions listed here are divided into the following four types. They all cover very important topics, so be sure to follow them carefully.

DANGER: ELECTRICAL SHOCK

Switch off all power supply before removing the electrical component box service panel or before making any connections or touching electrical parts.

Do not touch any switch with wet fingers. Touching a switch with wet fingers can cause electrical shock. Before touching electrical parts, turn off all applicable power supply.

To avoid electric shock, be sure to disconnect the power supply 1 minute or more before servicing the electrical parts. Even after 1 minute, always measure the voltage at the terminals of the main terminal, main circuit capacitors or electrical parts and, before touching, be sure that those voltages are 50 V DC or less.

When service panels are removed, live parts can easily be touched by accident. Never leave the unit unattended during installation or servicing when the service panel is removed.

DANGER: DO NOT TOUCH PIPING AND INTERNAL PARTS

Do not touch the refrigerant piping, water piping or internal parts during and immediately after operation. The piping and internal parts may be hot or cold depending on the working condition of the unit.

Your hand may suffer burns or frostbite if you touch the piping or internal parts. To avoid injury, give the piping and internal parts time to return to normal temperature or, if you must touch them, be sure to wear protective gloves.

Also, at least, following information shall be provided at an accessible place of the system:

- Instructions for shutting down the system in case of an emergency.
- Name and address of fire department, police and hospital.
- Name, address and day and night telephone numbers for obtaining service.

In Europe, EN 378 provides the necessary guidance for this logbook.

3. Introduction

3.1. General information

This installation manual concerns the VRV IV, full inverter driven, heat pump system for replacement purposes. Depending on the situation, the existing refrigerant piping of a previous installation or in some cases even indoor units can be reused.

Model line up:

- RXYQQ8~20=single unit model.
- RXYQQ22~42=multi unit model (consisting of 2 or 3 RXYQQ* modules).

These units are intended for outdoor installation and aimed for heat pump applications including air to air applications.

These units have (in single use) heating capacities ranging from 25 to 63 kW and cooling capacities rating from 22.4 to 56 kW. In multi combination the heating capacity can go up till 132 kW and in cooling till 118 kW.

The outdoor unit is designed to work in heating mode at ambient temperatures from –20°C to 21°C and in cooling mode at ambient temperatures from –5°C to 43°C.

NOTICE

Design of the system must not be done at temperatures below –15°C.

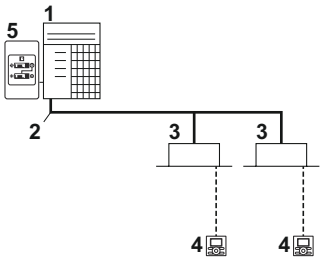

1 VRV IV replacement heat pump outdoor unit
2 Refrigerant piping
3 VRV direct expansion (DX) indoor unit
4 User interface (dedicated depending on indoor unit type)
5 Cool/Heat changeover remote control switch

INFORMATION

Not all combinations of indoor units are allowed, for guidance, see "3.2. Combination and options" on page 3.

3.2. Combination and options

The VRV IV replacement heat pump system can be combined with several types of indoor units and is intended for R410A use only.

For an overview which units are available you can consult the product catalogue for VRV IV.

NOTICE

To be sure your system setup (outdoor unit+indoor unit(s)) will work, you have to consult the latest technical engineering data for VRV IV replacement heat pump.

An overview is given indicating the allowed combinations of indoor units and outdoor units. Not all combinations are allowed. They are subject to rules mentioned in the technical engineering data.

3.2.1. Indoor unit combinations

In general following type of indoor units can be connected to a VRV IV replacement heat pump system. The list is non-exhaustive.

- VRV direct expansion (DX) indoor units for R410A.
- AHU (air to air applications): EKEXV-kit+EKEQ-box are required, depending on application.
- VRV direct expansion (DX) indoor units for non-R410A.

List of compatible (non-R410A) VRV DX indoor units: model series as in table below **ONLY**. Contact your dealer in order to apply the correct field settings on these indoor units.

Model series	Type
FXYBP_K7V1**9**	Conceiled ceiling
FXYSP_KA7V1**9**	
FXYMP_KV1**9**	
FXYCP_K7V1**9**	2-way blow ceiling mounted
FXYFP_KB7V1**9**	4-way blow ceiling mounted
FXYHP_KVE**9**	Ceiling suspended
FXYL(M)P_KV1**9**	Floorstanding
FXYKP_KV1**9**	Ceiling mounted corner cassette
FXYAP_KV1**9**	Wall mounted

Other non-R410A indoor units are **NOT** allowed.

INFORMATION

A combination of R410A VRV DX indoor units with non-R410A VRV DX indoor units will block the system. Such combinations cannot be used. Either all VRV DX indoor units are non-R410A type (as listed above) or R410A type.

3.2.2. Outdoor unit combinations

- Multi unit combinations can never contain other models than one of the multi modules (RXYQQ8~20).
- Standard combinations for VRV IV replacement heat pump system are as indicated in table below, where RXYQQ22~42 consists of several RXYQQ8~20 modules in the horsepower class as indicated.
- Other combinations than these here below are prohibited.

		8 HP	10 HP	12 HP	14 HP	16 HP	18 HP	20 HP
Heat pump	RXYQQ8*	1						
	RXYQQ10*		1					
	RXYQQ12*			1				
	RXYQQ14*				1			
	RXYQQ16*					1		
	RXYQQ18*						1	
	RXYQQ20*							1
Multi combination with 2 outdoor units	RXYQQ22*		1	1				
	RXYQQ24*	1				1		
	RXYQQ26*			1	1			
	RXYQQ28*			1		1		
	RXYQQ30*			1			1	
	RXYQQ32*					2		
	RXYQQ34*					1	1	
	RXYQQ36*					1		1
Multi combination with 3 outdoor units	RXYQQ38*	1	1					1
	RXYQQ40*		1	1			1	
	RXYQQ42*		1			2		

To install the outdoor unit, the following optional parts are also required.

1 Refrigerant branching kit.

Description	Model name
Refnet header	KHRQ22M29H
	KHRQ22M64H
	KHRQ22M75H
Refnet joint	KHRQ22M20T
	KHRQ22M29T9
	KHRQ22M64T
	KHRQ22M75T

For the selection of the optimal branching kit, please refer to "9.4. Selection of refrigerant branch kits" on page 13.

2 Outdoor unit multi connection piping kit.

Number of outdoor units connected	
2	3
BHFQ22P1007	BHFQ22P1517

3 In order to control the cooling or heating operation from a central location, the following option can be connected:
- Cool/heat change over switch: KRC19-26A.
- Cool/heat change over PCB: BRP2A81
- With optional fixing box for the switch: KJB111A.

4 To instruct specific operation with an external input coming from a central control the external control adaptor (DTA104A61/62) can be used. Instructions (group or individual) can be instructed for low noise operation and power consumption limitation operation

5 For VRV IV replacement heat pump system it is also possible to make several commissioning field settings through a personal computer interface. For this option EKPCCAB* is required which is a dedicated cable to communicate with the outdoor unit. The software for the user interface program can be downloaded from the Daikin extranet.

INFORMATION

Refer to the technical engineering data for the latest option names.

3.3. Indoor capacity range

Total capacity of indoor units needs to be within the specified range. The connection ratio (CR): 50%≤CR≤130%.

HP class of outdoor unit	50% minimum CR	100% nominal CR	130% maximum CR
8	100	200	260
10	125	250	325
12	150	300	390
14	175	350	455
16	200	400	520
18	225	450	585
20	250	500	650
22	275	550	715
24	300	600	780
26	325	650	845
28	350	700	910
30	375	750	975
32	400	800	1040
34	425	850	1105
36	450	900	1170
38	475	950	1235
40	500	1000	1300
42	525	1050	1365

NOTICE

When selecting the total capacity higher than mentioned in above table, cooling and heating capacity will drop. For additional information see technical engineering data.

3.4. Scope of the manual

This manual describes the procedures for handling, installing and connecting the VRV IV replacement heat pump outdoor units. This manual has been prepared to ensure adequate maintenance of the unit, and it will provide help in case problems occur.

INFORMATION

The installation of the indoor unit(s) is described in the indoor unit installation manual provided with the indoor units.

3.5. Model identification

Model name: R X Y Q Q

Code	Description R X Y Q Q 18 T7 Y1 B
R	Outdoor air cooled
X	Heat pump (no continuous heating)
Y	Pair module only[(a)]
Q	Refrigerant R410A
Q	Replacement functionality
18	Capacity index
T7	VRV IV series
Y1	Power supply: 3N~, 380-415 V, 50 Hz
B	European Market

(a) For RXYQQ, there is no restriction on use as multi module.

4. Accessories

4.1. Accessories supplied with this unit

See location 1 in the figure below for reference to where following accessories are supplied with the unit.

Item	Quantity
Installation manual and operation manual	1
Additional refrigerant charge label	1
Installation information sticker	1
Fluorinated greenhouse gases label	1
Multilingual fluorinated greenhouse gases label	1
Piping accessory bag	1

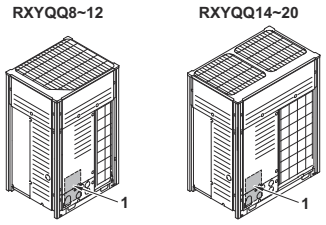

See location 1 in the figure above for reference to where following accessories are supplied with the unit.

Accessory pipes (mm)	8 HP		10 HP		12 HP	
	Øa	Øb	Øa	Øb	Øa	Øb
Gas pipe						
Front connection 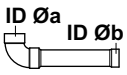	19.1		25.4	22.2	25.4	28.6
Bottom connection 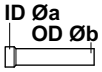	19.1		25.4	22.2	25.4	28.6
Liquid pipe						
Front connection 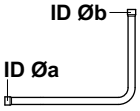	9.52		9.52		9.52	12.7
Bottom connection 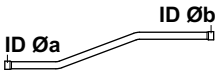	9.52		9.52		9.52	12.7

Accessory pipes (mm)	14 HP		16 HP		18 HP	
	Øa	Øb	Øa	Øb	Øa	Øb
Gas pipe						
Front connection 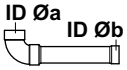	25.4	28.6	25.4	28.6	25.4	28.6
Bottom connection 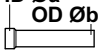	25.4	28.6	25.4	28.6	25.4	28.6
Liquid pipe						
Front connection 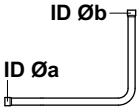	12.7					15.9
Bottom connection	12.7					15.9

Accessory pipes (mm)	20 HP	
	Øa	Øb
Gas pipe		
Front connection 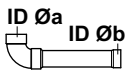	25.4	28.6
Bottom connection 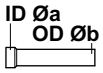	25.4	28.6
Liquid pipe		
Front connection 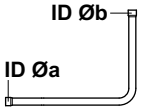	12.7	15.9
Bottom connection	12.7	15.9

5. Overview of unit

5.1. Opening the unit

To gain access to the unit, front plates need to be opened as follows:

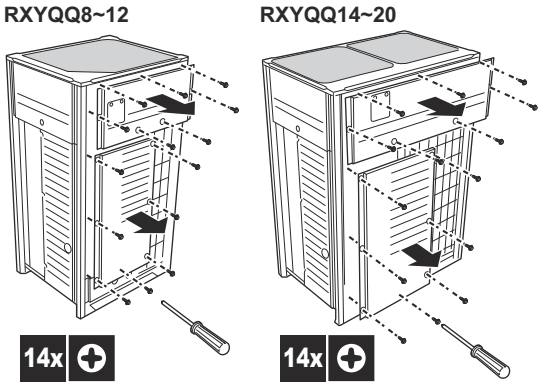

Once the front plates open, the electrical component box can be accessed by removing the electrical component box cover as follows.

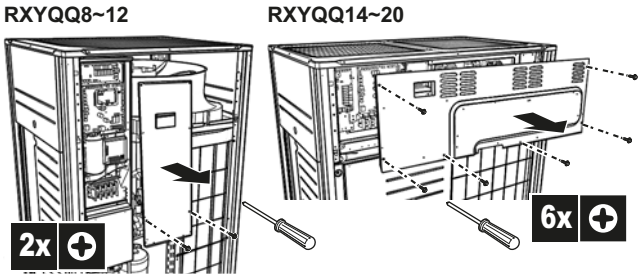

For service purposes, the push buttons on the main PCB need to be accessed. To access these push buttons, the electrical component box cover does not need to be opened. See "13. Making field settings" on page 28.

DANGER: Electrical shock

See "2. General safety precautions" on page 2.

DANGER: Do not touch piping and internal parts.

See "2. General safety precautions" on page 2.

5.2. Main components in the unit

For all the models a piping diagram and outlook drawing are available. Depending on the model type some components in the main component list may not be existing in the unit.

Main components (see figure 1, figure 2, figure 3, figure 4)

1. Compressor (M1C)
2. Compressor (M2C)
3. Heat exchanger
4. Fan
5. Fan motor (M1F, M2F)
6. Accumulator
7. Expansion valve, main (Y1E)
8. Expansion valve, subcool heat exchanger (Y2E)
9. Subcool heat exchanger
10. Oil separator
11. Solenoid valve, oil accumulator (Y2S)
12. Solenoid valve, oil1 (Y3S)
13. Solenoid valve, oil2 (Y4S)
14. 4-way valve, main (Y1S)
15. Electrical component box
16. Service port, refrigerant charge
17. Stop valve, liquid
18. Stop valve, gas

5.2.1. RXYQQ* (8~12 HP)

Piping diagram

See figure 1.

Outlook drawing

See figure 3.

5.2.2. RXYQQ* (14~20 HP)

Piping diagram

See figure 2.

Outlook drawing

See figure 4.

5.3. Main components in the electrical component box

RXYQQ8~12

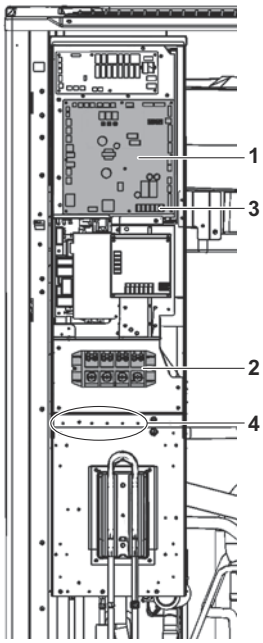

RXYQQ14~20

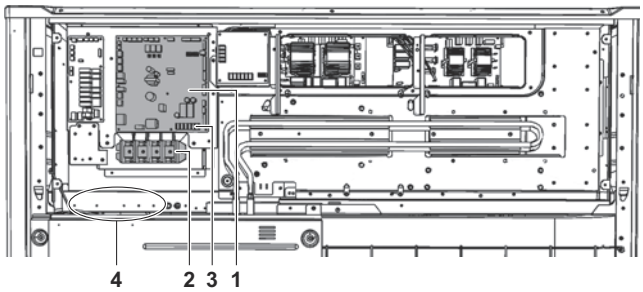

1 Main PCB.
2 Terminal block X1M: main terminal block which allows easy connection of field wiring for power supply.
3 Terminal X1M on main PCB: terminal block for transmission wiring.
4 Cable tie mountings: the cable tie mountings allow to fix the field wiring with cable ties to the electrical component box to ensure strain relief.

INFORMATION

For more details refer to the wiring diagram of the units. The wiring diagram is located on the inside of the electrical component box.

6. Selecting an installation location

WARNING

Be sure to provide for adequate measures in order to prevent that the unit is used as a shelter by small animals.

Small animals making contact with electrical parts can cause malfunctions, smoke or fire. Please instruct the customer to keep the area around the unit clean and clear.

This is a class A product. In a domestic environment this product may cause radio interference in which case the user may be required to take adequate measures.

CAUTION

Appliance not accessible to the general public, install it in a secured area, protected from easy access.

This appliance is intended to be used by expert or trained users in shops, in light industry and on farms, or for commercial use by lay persons.

6.1. General precautions on installation

Select an installation site that meets the following requirements:

- The foundation must be strong enough to support the weight of the unit.
- The floor is flat to prevent vibrations and noise generation and to have sufficient stability.
- The space around the unit is adequate for maintenance and servicing (refer to "7.2. Service space" on page 9).
- The space around the unit allows for sufficient air circulation.
- There is no danger of fire due to leakage of inflammable gas.
- The equipment is not intended for use in a potentially explosive atmosphere.
- Select the location of the unit in such a way that the sound generated by the unit does not disturb anyone, and the location is selected according the applicable legislation.
- All piping lengths and distances have been taken into consideration (refer to "9.5. System piping (length) limitations" on page 13).
- Take care that in the event of a water leak, water cannot cause any damage to the installation space and surroundings.
- When installing the unit in a small room, take measures in order to keep the refrigerant concentration from exceeding allowable safety limits in the event of a refrigerant leak, refer to "18. Caution for refrigerant leaks" on page 47.

CAUTION

Excessive refrigerant concentrations in a closed room can lead to oxygen deficiency.

NOTICE

The equipment described in this manual may cause electronic noise generated from radio-frequency energy. The equipment complies to specifications that are designed to provide reasonable protection against such interference. However, there is no guarantee that interference will not occur in a particular installation.

It is therefore recommended to install the equipment and electric wires keeping proper distances away from stereo equipment, personal computers, etc.

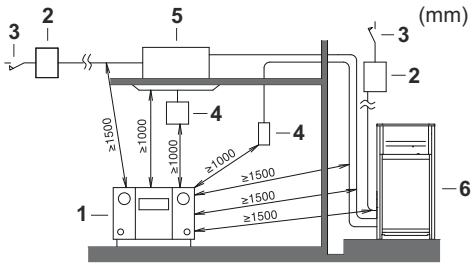

1 Personal computer or radio
2 Fuse
3 Earth leakage protector
4 User interface
5 Indoor unit
6 Outdoor unit

In places with weak reception, keep distances of 3 m or more to avoid electromagnetic disturbance of other equipment and use conduit tubes for power and transmission lines.

- The refrigerant R410A itself is nontoxic, non-flammable and is safe. If the refrigerant should leak however, its concentration may exceed the allowable limit depending on room size. Due to this, it could be necessary to take measures against leakage. Refer to "18. Caution for refrigerant leaks" on page 47.
- Do not install in the following locations:
  - Locations where sulphurous acids and other corrosive gases may be present in the atmosphere. Copper piping and soldered joints may corrode, causing refrigerant to leak.
  - Locations where a mineral oil mist, spray or vapour may be present in the atmosphere. Plastic parts may deteriorate and fall off or cause water leakage.
  - Locations where equipment that produces electromagnetic waves is found. The electromagnetic waves may cause the control system to malfunction, preventing normal operation.
  - Locations where flammable gases may leak, where thinner, gasoline and other volatile substances are handled, or where carbon dust and other incendiary substances are found in the atmosphere. Leaked gas may accumulate around the unit, causing an explosion.
- When installing, take strong winds, typhoons or earthquakes into account, improper installation may result in the unit turning over.

6.2. Weather related precautions

- Select a place where the rain can be avoided as much as possible.
- Be sure that the air inlet of the unit is not positioned towards the main wind direction. Frontal wind will disturb the operation of the unit. If necessary, use a screen to block the wind.
- Ensure that water cannot cause any damage to the location by adding water drains to the foundation and prevent water traps in the construction.
- Do not install the unit in areas where the air contains high levels of salt such as that near the ocean.

6.3. Selecting a location in cold climates

NOTICE

When operating the unit in a low outdoor ambient temperature, be sure to follow the instructions described below.

To prevent exposure to wind and snow, install a baffle plate on the air side of the outdoor unit:

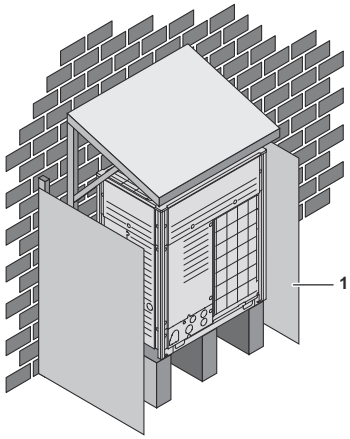

1 Baffle plate

In heavy snowfall areas it is very important to select an installation site where the snow will not affect the unit. If lateral snowfall is possible, make sure that the heat exchanger coil is not affected by the snow (if necessary construct a lateral canopy). Install the unit high enough from the ground to prevent burying in snow.

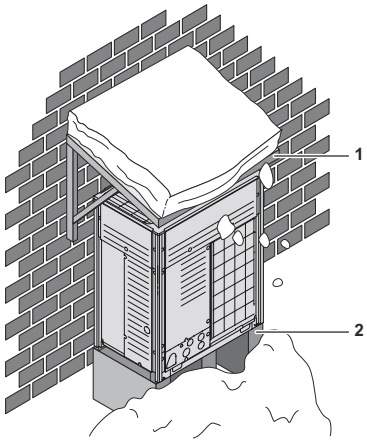

1 Construct a large canopy.
2 Construct a pedestal.

NOTICE

When operating the unit in a low outdoor ambient temperature with high humidity conditions, make sure to take precautions to keep the drainholes of the unit free by using proper equipment. For more information contact your local dealer.

7. Dimensions and service space

7.1. Dimensions of outdoor unit

RXYQQ8~12

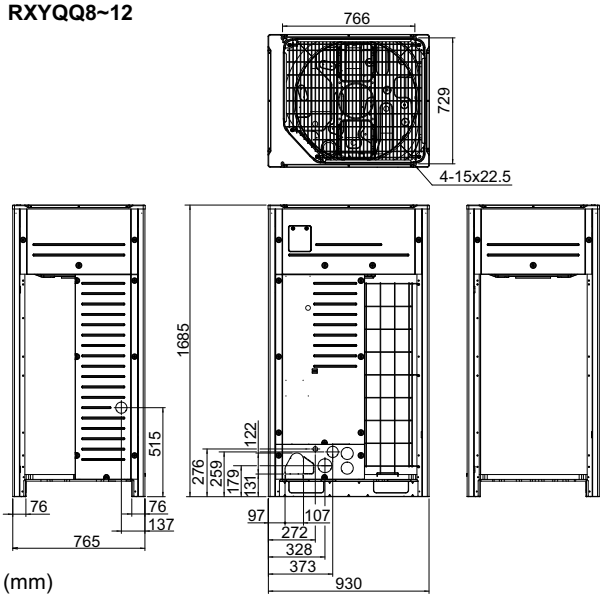

RXYQQ14~20

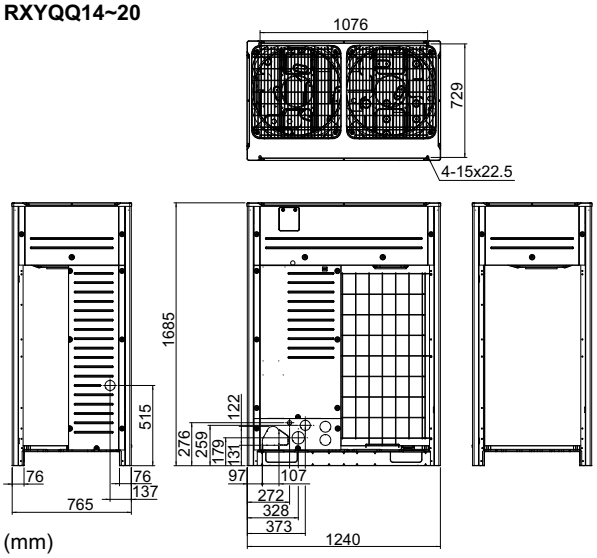

7.2. Service space

The space around the unit is adequate for servicing and the minimum space for air inlet and air outlet is available (refer to the figure below and choose one of the possibilities).

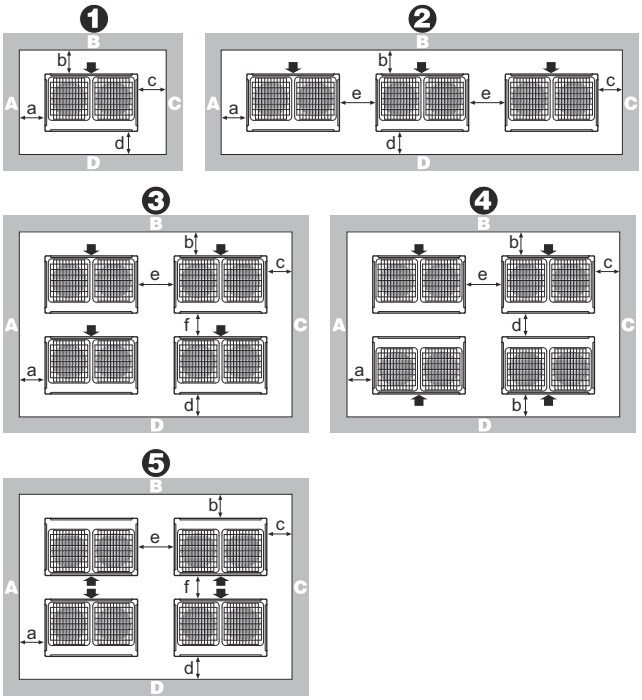

	A+B+C+D		A+B
❶	a≥10 mm b≥300 mm c≥10 mm d≥500 mm	a≥50 mm b≥100 mm c≥50 mm d≥500 mm	a≥200 mm b≥300 mm
❷	a≥10 mm b≥300 mm c≥10 mm d≥500 mm e≥20 mm	a≥50 mm b≥100 mm c≥50 mm d≥500 mm e≥100 mm	a≥200 mm b≥300 mm e≥400 mm
❸	a≥10 mm b≥300 mm c≥10 mm d≥500 mm e≥20 mm f≥600 mm	a≥50 mm b≥100 mm c≥50 mm d≥500 mm e≥100 mm f≥500 mm	
❹	a≥10 mm b≥300 mm c≥10 mm d≥500 mm e≥20 mm	a≥50 mm b≥100 mm c≥50 mm d≥500 mm e≥100 mm	
❺	a≥10 mm b≥500 mm c≥10 mm d≥500 mm e≥20 mm f≥900 mm	a≥50 mm b≥500 mm c≥50 mm d≥500 mm e≥100 mm f≥600 mm	

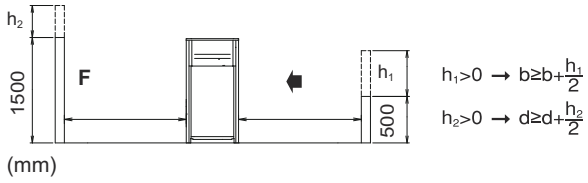

ABCD Sides along the installation site with obstacles
F Front side
➡ Suction side

- In case of an installation site where sides A+B+C+D have obstacles, the wall heights of sides A+C have no impact on service space dimensions. Refer to the figure above for impact of wall heights of sides B+D on service space dimensions.
- In case of an installation site where only the sides A+B have obstacles, the wall heights have no influence on any indicated service space dimensions.

- The installation space required on these drawings are for full load heating operation without considering possible ice accumulation.
  If the location of the installation is in a cold climate, then all dimensions above should be >500 mm to avoid accumulation of ice in between the outdoor units.

INFORMATION

The service space dimensions in above figure are based on cooling operation at 35°C ambient temperature (standard conditions).

INFORMATION

Further specifications can be found in the technical engineering data.

8. Inspecting, handling and unpacking the unit

8.1. Inspection

At delivery, the unit must be checked and any damage must be reported immediately to the carrier's claims agent.

8.2. Handling

1 When handling the unit, take into account the following:

Fragile, handle the unit with care.

Keep the unit upright in order to avoid compressor damage.

2 Choose on beforehand the path along which the unit is to be brought in.

3 Bring the unit as close as possible to its final installation position in its original package to prevent damage during transport.

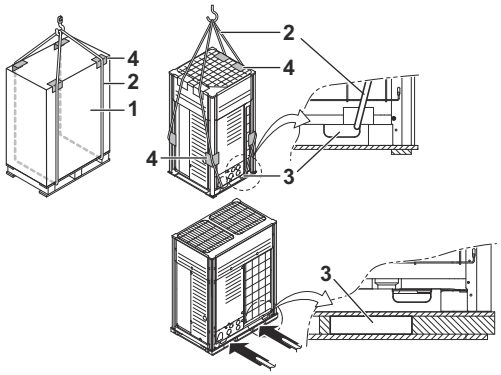

1 Packaging material
2 Belt sling
3 Opening
4 Protector

4 Lift the unit preferably with a crane and 2 belts of at least 8 m long as shown in the figure above.
  Always use protectors to prevent belt damage and pay attention to the position of the unit's centre of gravity.

NOTICE

Use a belt sling of ≤20 mm wide that adequately bears the weight of the unit.

A forklift can only be used for transport as long as the unit remains on its pallet as shown above.

8.3. Unpacking

CAUTION

To avoid injury, do not touch the air inlet or aluminium fins of the unit.

Relief the unit from its packing material:

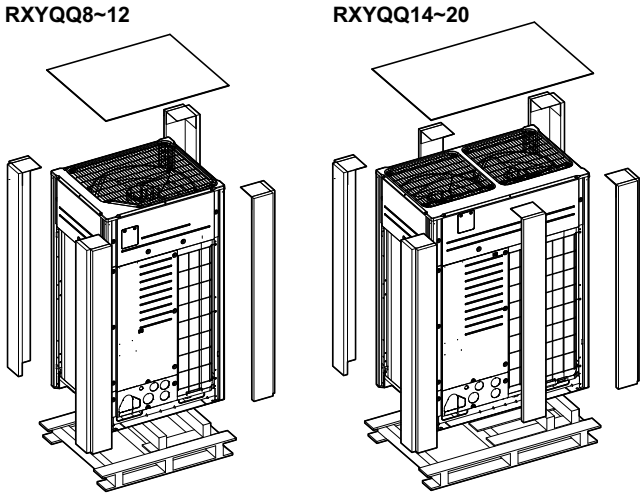

Take care not to damage the unit when removing the shrink foil with a cutter.

WARNING

Tear apart and throw away plastic packaging bags so that children will not play with them. Children playing with plastic bags face danger of death by suffocation.

1 Remove the 4 bolts fixing the unit to its pallet.

2 Make sure that all accessories as mentioned in "4.1. Accessories supplied with this unit" on page 4 are available in the unit.

8.4. Installing the unit

Make sure the unit is installed level on a sufficiently strong base to prevent vibration and noise.

NOTICE

When the installation height of the unit needs to be increased, do not use stands to only support the corners.

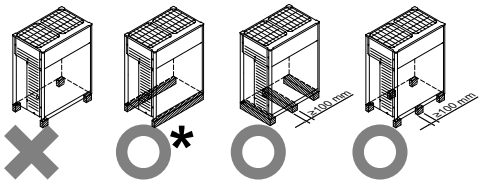

X Not allowed
O Allowed (*=preferred installation)

- The height of the foundation must at least be 150 mm from the floor. In heavy snowfall areas, this height should be increased, depending on the installation place and condition.
- The preferred installation is on a solid longitudinal foundation (steel beam frame or concrete). The foundation must be larger than the grey marked area.

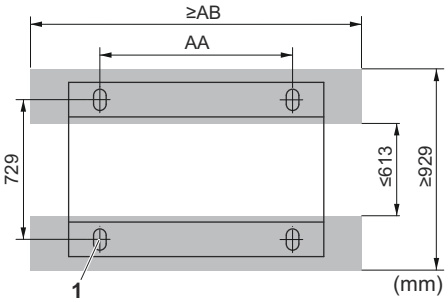

Minimum foundation

1 Anchor point (4×)

HP	AA	AB
8~12	766	992
14~20	1076	1302

- Fasten the unit in place using four foundation bolts M12. It is best to screw in the foundation bolts until their length remains 20 mm above the foundation surface.

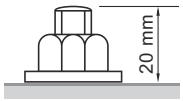

NOTICE

- Prepare a water drainage channel around the foundation to drain waste water from around the unit. During heating operation and when the outdoor temperatures are negative, the drained water from the outdoor unit will freeze up. If the water drainage is not taken care of, the area around the unit might be very slippery.
- When installed in a corrosive environment, use a nut with plastic washer (1) to protect the nut tightening part from rust.

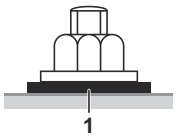

8.5. Method for removing transportation stay (only for RXYQQ14~20)

The yellow transportation stay installed over the compressor leg for protecting the unit during transport must be removed. Proceed as shown in the figure and procedure below.

1 Slightly loosen the fixing nut (A).

2 Remove the transportation stay (B) as shown in the figure below.

3 Tighten the fixing nut (A) again (12.3 N•m).

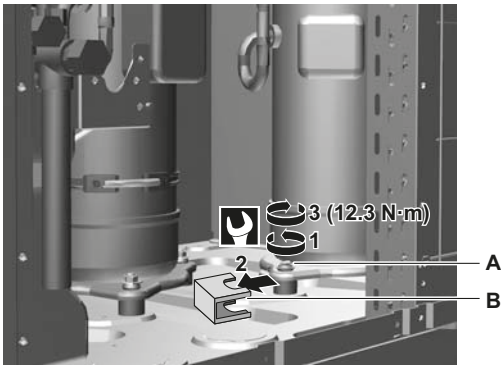

NOTICE

If the unit is operated with the transportation stay attached, abnormal vibration or noise may be generated.

9. Refrigerant pipe size and allowable pipe length

9.1. General information

NOTICE

The refrigerant R410A requires strict cautions for keeping the system clean, dry and tight.

- Clean and dry: foreign materials (including mineral oils or moisture) should be prevented from getting mixed into the system.
- Tight: R410A does not contain any chlorine, does not destroy the ozone layer, and does not reduce earth's protection against harmful ultraviolet radiation. R410A can contribute slightly to the greenhouse effect if it is released. Therefore we should take special attention to check the tightness of the installation.

NOTICE

When existing field piping is re-used, the design pressure of the piping has to be 33 bar (3.3 MPa) or higher.

INFORMATION

The RXYQQ unit will limit the pressure on the field piping to 33 bar. Inside the outdoor unit, the design pressure is 40 bar.

9.2. Selection of piping material

NOTICE

Piping and other pressure containing parts shall comply with the applicable legislation and shall be suitable for refrigerant. Use phosphoric acid deoxidised seamless copper for refrigerant.

NOTICE

Installation shall be done by a licensed installer, the choice of materials and installation shall conform completely with the applicable national and international codes.

In Europe, EN 378 is the applicable standard that shall be used.

- Foreign materials inside pipes (including oils for fabrication) must be ≤30 mg/10 m.
- Temper grade: use piping with temper grade in function of the pipe diameter as listed in table below.

Pipe Ø (mm)	Temper grade of piping material
≤15.9	O (annealed)
≥19.1	1/2H (half hard)

9.3. Selection of piping size

Determine the proper size referring to following tables and reference figure (only for indication).

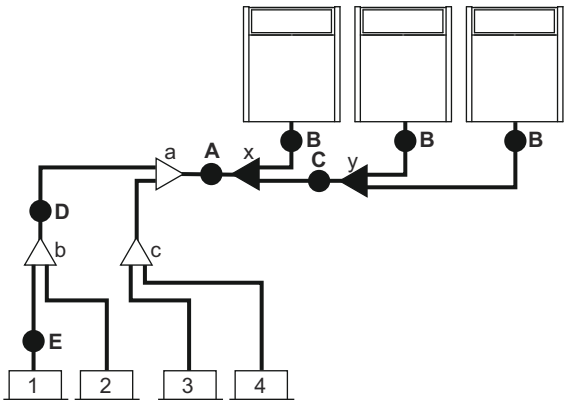

1~4 VRV DX indoor unit
a,b,c Indoor branch kit
x,y Outdoor multi connection kit

9.3.1. Piping between outdoor unit and (first) refrigerant branch kit: A, B, C

Choose from the following table in accordance with the outdoor unit total capacity type, connected downstream.

Outdoor unit capacity type (HP)	Piping outer diameter size (mm)			
	Gas		Liquid	
	Standard	Max.	Standard	Max.
8	19.1	28.6	9.5	15.9
10	22.2			
12~16	28.6	34.9	12.7	
18~22			15.9	19.1
24	34.9	41.3		
26~34			19.1	22.2
36~42	41.3	54.1		

9.3.2. Piping between refrigerant branch kits: D

Choose from the following table in accordance with the indoor unit total capacity type, connected downstream. Do not let the connection piping exceed the refrigerant piping size chosen by the general system model name.

Indoor unit capacity index	Piping outer diameter size (mm)			
	Gas		Liquid	
	Standard	Max.	Standard	Max.
<150	15.9	19.1	9.5	12.7
150≤x<200	19.1	25.4		
200≤x<290	22.2	28.6		15.9
290≤x<420	28.6[(a)]	34.9	12.7	
420≤x<640			15.9	19.1
640≤x<920	34.9	54.1	19.1	22.2
>920	41.3			

(a) Ø25.4 applicable in case of 290≤x<420, if available on the site.

Example:

Downstream capacity for E=capacity index of unit 1
Downstream capacity for D=capacity index of unit 1+capacity index of unit 2

9.3.3. Piping between refrigerant branch kit and indoor unit: E

Pipe size for direct connection to indoor unit must be the same as the connection size of the indoor unit.

Indoor unit capacity index	Piping outer diameter size (mm)			
	Gas pipe		Liquid pipe	
	Standard	Max.	Standard	Max.
15, 20, 25, 32, 40, 50	12.7	15.9	6.4	9.5
63, 80	15.9	19.1	9.5	12.7
100, 125		25.4		
200	19.1	28.6		
250	22.2			

■ When the equivalent pipe length between outdoor and indoor units is 90 m or more, the size of the main pipes (both gas side and liquid side) must be increased. Depending on the length of the piping, the capacity may drop, but even in such a case it is possible to increase the size of the main pipes.

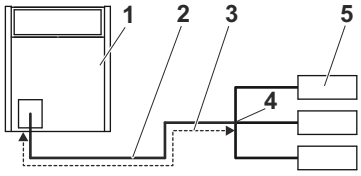

1 Outdoor unit
2 Main pipes
3 Increase
4 First refrigerant branch kit
5 Indoor unit

Size up		
HP Class	Gas side (mm)	Liquid size (mm)
8	19.1 → 22.2	9.5 → 12.7
10	22.2 → 25.4[(a)]	
12+14	28.6[(b)]	12.7 → 15.9
16	28.6 → 31.8[(a)]	
18~22	28.6 → 31.8[(a)]	15.9 → 19.1
24	34.9[(b)]	15.9 → 19.1
26~34	34.9 → 38.1[(a)]	19.1 → 22.2
36~42	41.3[(b)]	

(a) If size is NOT available, increase is NOT allowed.
(b) Increase is NOT allowed.

■ The pipe thickness of the refrigerant piping shall comply with the applicable legislation. The minimal pipe thickness for R410A piping must be in accordance with the table below.

Pipe Ø (mm)	Minimal thickness t (mm)
6.4	0.4
9.5	0.5
12.7	0.7
15.9	0.9
19.1	0.6[(a)]
22.2	0.6
28.6	0.8
31.8	0.9
34.9	1.0
38.1	1.1
41.3	

(a) If annealed temper grade is 1.

The refrigerant pipes and branches must meet the condition of design pressure 33 bar (3.3 MPa). If it is NOT possible to confirm this, use the refrigerant branch as mentioned in this chapter.
Confirm that the (pipe) thickness may NOT be less than the required minimum thickness.

- In case the required pipe sizes (inch sizes) are not available, it is also allowed to use other diameters (mm sizes), taken the following into account:
  - Select the pipe size nearest to the required size.
  - Use the suitable adapters for the change-over from inch to mm pipes (field supply).

  In this case, the additional refrigerant calculation has to be adjusted as mentioned in "14. Charging refrigerant" on page 30.

9.4. Selection of refrigerant branch kits

Refrigerant refnets

For piping example, refer to "9.3. Selection of piping size" on page 12.

- When using refnet joints at the first branch counted from the outdoor unit side, choose from the following table in accordance with the capacity of the outdoor unit (example: refnet joint a).

Outdoor unit capacity type (HP)	2 pipes
8-10	KHRQ22M29T9
12-22	KHRQ22M64T
24-42	KHRQ22M75T

- For refnets joints other than the first branch (example refnet joint b), select the proper branch kit model based on the total capacity index of all indoor units connected after the refrigerant branch.

Indoor unit capacity index	2 pipes
<200	KHRQ22M20T
200≤x<290	KHRQ22M29T9
290≤x<640	KHRQ22M64T
≥640	KHRQ22M75T

- Concerning refnet headers, choose from the following table in accordance with the total capacity of all the indoor units connected below the refnet header.

Indoor unit capacity index	2 pipes
<200	KHRQ22M29H
200≤x<290	KHRQ22M29H
290≤x<640	KHRQ22M64H[(a)]
≥640	KHRQ22M75H

(a) If the pipe size above the refnet header is Ø34.9 or more, KHRQ22M75H is required.

INFORMATION

Maximum 8 branches can be connected to a header.

- How to choose an outdoor multi connection piping kit (needed if the outdoor unit capacity type is 22 HP or more). Choose from the following table in accordance with the number of outdoor units.

Number of outdoor units	Branch kit name
2	BHFQ22P1007
3	BHFQ22P1517

NOTICE

Refrigerant branch kits can only be used with R410A.

9.5. System piping (length) limitations

9.5.1. Piping length restrictions

Make sure to perform the piping installation within the range of the maximum allowable pipe length, allowable level difference and allowable length after branching as indicated below.

Definitions

Actual piping length: pipe length between outdoor[(1)] and indoor units.

Equivalent piping length[(2)]: pipe length between outdoor[(1)] and indoor units.

Total piping length: total piping length from the outdoor[(1)] to all indoor units.

Difference in height between outdoor and indoor units: H1.

Difference in height between indoor and indoor units: H2.

Difference in height between outdoor and outdoor units: H3.

(1) If the system capacity is >20HP, re-read "the first outdoor branch as seen from the indoor unit".

(2) Assume equivalent piping length of refnet joint=0.5 m and refnet header=1 m (for calculation purposes of equivalent piping length, not for refrigerant charge calculations).

9.5.2. System containing VRV DX indoor units

System setup

	Branch with refnet joint	Branch with refnet joint and refnet header	Branch with refnet header
Single outdoor	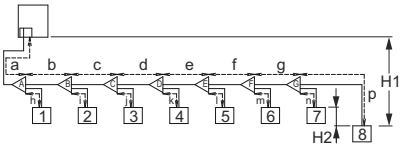 Example 1.1	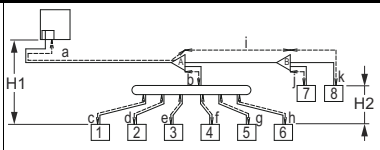 Example 1.2	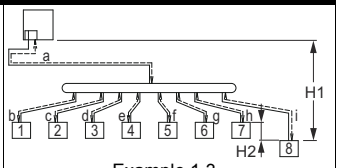 Example 1.3
Multi outdoor 1 Indoor unit A Refnet joint Refnet header Outdoor multi connection piping kit	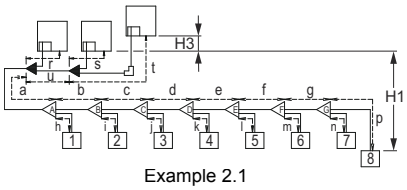 Example 2.1	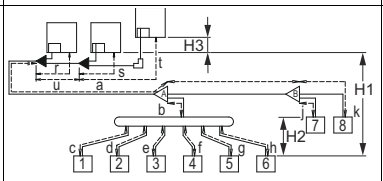	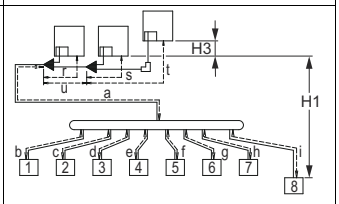

Example 3: with standard multi layout

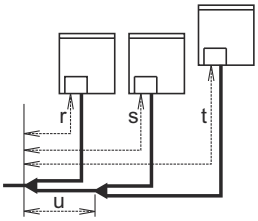

Maximum allowable length

■ Between outdoor and indoor units

Actual piping length	**120 m**	Example 1.1 unit 8: a+b+c+d+e+f+g+p≤120 m Example 2.1 unit 8: a+b+c+d+e+f+g+p≤120 m	Example 1.2 unit 6: a+b+h≤120 m unit 8: a+i+k≤120 m	Example 1.3 unit 8: a+i≤120 m
Equivalent length(2)	**150 m**	—	—	—
Total piping length	**300 m**	Example 1.1 a+b+c+d+e+f+g+h+i+j+k+l+m+n+p≤300 m Example 2.1 a+b+c+d+e+f+g+h+i+j+k+l+m+n+p≤300 m	—	—

■ Between outdoor branch and outdoor unit (only in case >20 HP)

Actual piping length	10 m	Example 3 r, s, t≤10 m; u≤5 m
Equivalent length	13 m	—

Maximum allowable height difference

H1	≤50 m (40 m) (if outdoor is located below indoor units)
H2	≤15 m
H3	≤5 m

Maximum allowable length after branch

The pipe length from the first refrigerant branch kit to the indoor unit ≤40 m.

Example 1.1: unit 8: b+c+d+e+f+g+p≤40 m

Example 1.2: unit 6: b+h≤40 m, unit 8: i+k≤40 m

Example 1.3: unit 8: i≤40 m

However, extension is possible if all below conditions are met. In this case limitation can be extended up to 90 m.

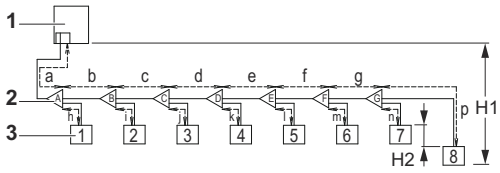

1 Outdoor units
2 Refnet joints (A~G)
3 Indoor unit (1~8)

a. The piping length between all indoor to the nearest branch kit is ≤40 m.
Example: h, l, j … p≤40 m

b. It is necessary to increase the pipe size of the gas and liquid piping if the pipe length between the first and the final branch kit is over 40 m.
If the increased pipe size is larger than the pipe size of the main pipe, then the pipe size of the main pipe has to be increased as well.

Increase the pipe size as follows:
9.5 → 12.7; 12.7 → 15.9; 15.9 → 19.1; 19.1 → 22.2; 22.2 → 25.4[(3)]; 28.6 → 31.8[(3)]; 34.9 → 38.1[(3)]
Example: unit 8: b+c+d+e+f+g+p≤90 m and b+c+d+e+f+g >40 m; increase the pipe size of b, c, d, e, f, g.

c. When the piping size is increased (step b), the piping length has to be counted as double (except for the main pipe and the pipes that are not increased in pipe size).
The total piping length has to be within limitations (see table above).
Example:
a+b*2+c*2+d*2+e*2+f*2+g*2+h+i+j+k+l+m+n+p≤300 m.

d. The piping length difference between the nearest indoor from first branch to the outdoor unit and farthest indoor to the outdoor unit is ≤40 m.
Example: The farthest indoor unit 8. The nearest indoor unit 1 → (a+b+c+d+e+f+g+p)–(a+h)≤40 m.

9.6. Multi system piping installation

■ Front connection
Remove the front plate knock out holes to connect (see figure below).

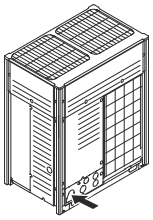

■ Bottom connection
Remove the knock out holes on the bottom frame and route the piping under the bottom frame (see figure below).

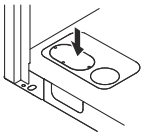

9.6.1. Precautions when connecting piping between outdoor units (multiple outdoor unit system)

■ To connect the piping between outdoor units, an optional multi connection piping kit BHFQ22P1007/1517 is always required. When installing the piping, follow the instructions in the installation manual that comes with the kit.

■ Only proceed with piping work after considering the limitations on installing listed here and in the chapter "10.2. Connecting the refrigerant piping" on page 17 always referring to the installation manual delivered with the kit.

9.6.2. Possible installation patterns and configurations

■ The piping between the outdoor units must be routed level or slightly upward to avoid the risk of oil retention into the piping.

Pattern 1

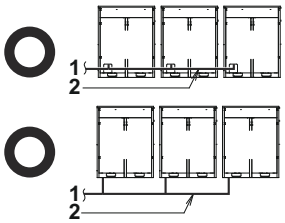

Pattern 2

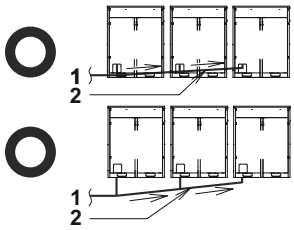

1 To indoor unit
2 Piping between outdoor units

Prohibited patterns: change to pattern 1 or 2.

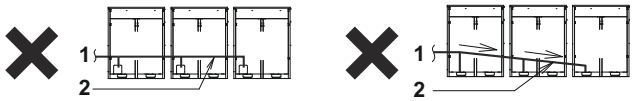

1 To indoor unit
2 Piping between outdoor units

■ To avoid the risk of oil retention to the outmost outdoor unit, always connect the stop valve and the piping between outdoor units as shown in the 4 correct possibilities of the figure below.

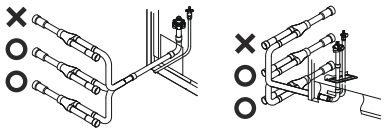

Prohibited patterns: change to pattern 1 or 2.

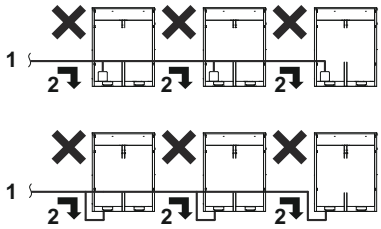

1 To indoor unit
2 Oil collects to the outmost outdoor unit

Change to configuration as in figures below

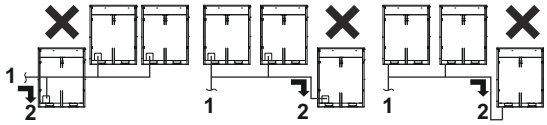

1 To indoor unit
2 Oil collects to the outmost outdoor unit when the system stops

Correct configuration

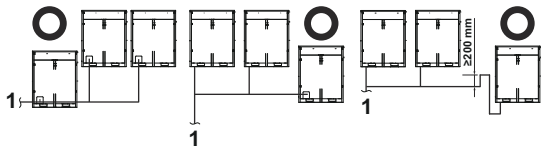

1 To indoor unit

■ If the piping length between the outdoor units exceeds 2 m, create a rise of 200 mm or more in the gas line within a length of 2 m from the kit.
If ≤2 m

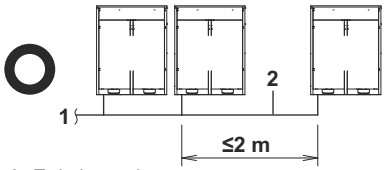

1 To indoor unit
2 Piping between outdoor units

If >2 m

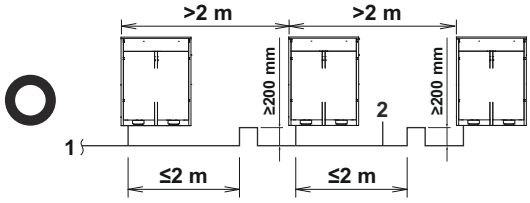

1 To indoor unit
2 Piping between outdoor units

(3) If available on the site. Otherwise it cannot be increased.

NOTICE

There are restrictions on the refrigerant pipe connection order between outdoor units during installation in case of a multiple outdoor unit system. Install according to following restrictions. The capacities of outdoor units A, B and C must fulfill the following restriction conditions: A≥B≥C.

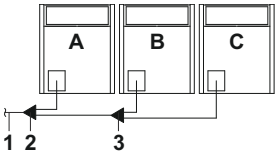

1 To indoor units
2 Outdoor unit multi connecting piping kit (first branch)
3 Outdoor unit multi connecting piping kit (second branch)

10. Precautions on refrigerant piping

- Do not allow anything other than the designated refrigerant to get mixed into the refrigerant cycle, such as air, nitrogen, etc. If any refrigerant gas leaks while working on the unit, ventilate the room thoroughly right away.
- When the design pressure for the existing field piping (gas and liquid piping) is at least 33 bar (3.3 MPa), then it is possible to use the existing piping (please read "9. Refrigerant pipe size and allowable pipe length" on page 11). Check also if the existing piping (including branch piping) is compatible with the unit in terms of materials and thickness and if the pipes and branch piping are not corroded.
  If the existing field piping does not comply with the conditions above, replace the existing field piping with field piping which meets the specified conditions.
- Check if there was no compressor malfunction or similar issues that could contribute to piping problems in the past. If there where such problems, check that the appropriate repairs where made, and if not, implement such repairs.
- Use R410A only when adding refrigerant
- Installation tools:
  Make sure to use installation tools (gauge manifold, charge hose, etc.) that are exclusively used for R410A installations to withstand the pressure and to prevent foreign materials (e.g., mineral oils and moisture) from mixing into the system.
- Vacuum pump:
  - Use a 2-stage vacuum pump with a non-return valve.
  - Make sure the pump oil does not flow oppositely into the system while the pump is not working.
  - Use a vacuum pump which can evacuate to –100.7 kPa (5 Torr, –755 mm Hg).

Protection against contamination when installing pipes

Take measures to prevent foreign materials like moisture and contamination from mixing into the system.

	Installation period	Protection method
	More than a month	Pinch the pipe
	Less than a month	Pinch or tape the pipe
	Regardless of the period	

Block all gaps in the holes for passing out piping and wiring using sealing material (field supply) (the capacity of the unit will drop and small animals may enter the machine).

Example: passing piping out through the front.

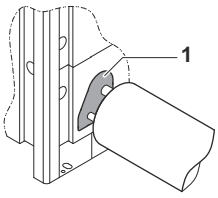

1 Close the areas marked with "▬". (When the piping is routed from the front panel.)

- Use clean pipes only.
- Hold the pipe end downwards when removing burrs.
- Cover the pipe end when inserting it through a wall so that no dust or dirt enters the pipe.

NOTICE

After all the piping has been connected, make sure there is no gas leak. Use nitrogen to perform a gas leak detection.

10.1. Caution for brazing

- Make sure to blow through with nitrogen when brazing. Blowing through with nitrogen prevents the creation of large quantities of oxidized film on the inside of the piping. An oxidized film adversely affects valves and compressors in the refrigerating system and prevents proper operation.
- The nitrogen pressure should be set to 0.02 MPa (i.e., just enough so it can be felt on the skin) with a pressure-reducing valve.

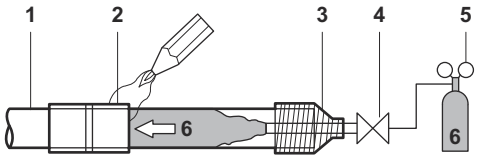

1 Refrigerant piping
2 Part to be brazed
3 Taping
4 Hands valve
5 Pressure-reducing valve
6 Nitrogen

Do not use anti-oxidants when brazing the pipe joints. Residue can clog pipes and break equipment:

- Do not use flux when brazing copper-to-copper refrigerant piping. Use phosphor copper brazing filler alloy (BCuP) which does not require flux.
- Flux has an extremely harmful influence on refrigerant piping systems. For instance, if chlorine based flux is used, it will cause pipe corrosion or, in particular, if the flux contains fluorine, it will deteriorate the refrigerant oil.

10.2. Connecting the refrigerant piping

NOTICE

Installation shall be done by an installer, the choice of materials and installation shall comply with the applicable legislation. In Europe, EN 378 is the applicable standard that shall be used.

Ensure that the field piping and connections are not subjected to stress.

10.2.1. Decide front or side (bottom) connection

Installation of refrigerant piping is possible as front connection or side connection (when taken out from the bottom) as shown in the figure below.

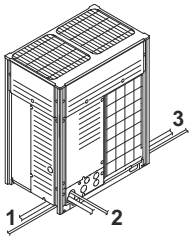

1 Left-side connection
2 Front connection
3 Right-side connection

- For side connections, the knockout hole on the bottom plate should be removed:

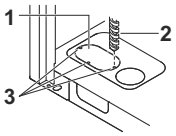

1 Large knockout hole
2 Drill
3 Points for drilling

NOTICE

Precautions when knocking out knockout holes:

- Be sure to avoid damaging the casing.
- After knocking out the knockout holes, we recommend you remove the burrs and paint the edges and areas around the edges using repair paint to prevent rusting.
- When passing electrical wiring through the knockout holes, wrap the wiring with protective tape to prevent damage as shown above.

10.2.2. Remove the pinched pipes

WARNING

Any gas or oil remaining inside the stop valve may blow off the pinched piping.

Failure to observe the instructions in procedure below properly may result in property damage or personal injury, which may be serious depending on the circumstances.

Use the following procedure to remove the pinched piping:

1 Remove the valve cover and make sure that the stop valves are fully closed.

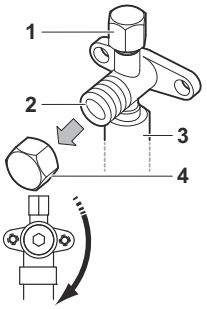

1 Service port and service port cover
2 Stop valve
3 Field piping connection
4 Stop valve cover

2 Connect the vacuuming/recovery unit to service ports of all stop valves.

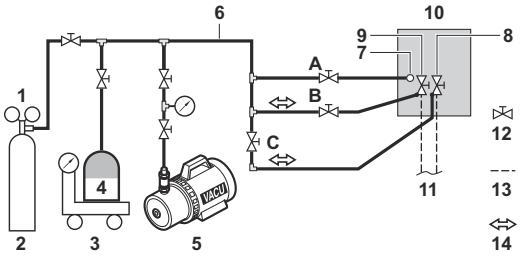

1 Gauge manifold
2 Nitrogen
3 Measuring instrument
4 Refrigerant R410A tank (siphon system)
5 Vacuum pump
6 Charge hose
7 Refrigerant charge port
8 Gas pipe stop valve
9 Liquid pipe stop valve
A Valve A
B Valve B
C Valve C
10 Outdoor unit
11 To indoor unit
12 Stop valve
13 Field piping
14 Gas flow

3 Recover gas and oil from the pinched piping by using a recovery unit.

CAUTION

Do not vent gases into the atmosphere.

4 When all gas and oil is recovered from the pinched piping, disconnect the charge hose and close the service ports.

5 In case the pinched piping lower part looks like detail A in the figure below, follow instructions as per procedure steps 7+8.
In case the pinched piping lower part looks like detail B in the figure below, follow instructions as per procedure steps 6+7+8.

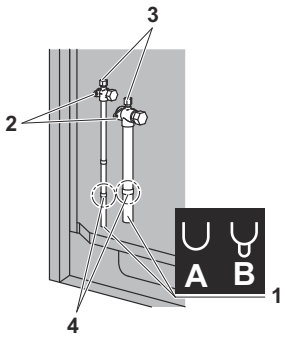

1 Pinched piping
2 Stop valve
3 Service port
4 Point of melting the brazing metal; cut pipe off just above this brazing or marking point

6 For stop valves, cut off the lower part of the smaller pinched piping with an appropriate tool (e.g., pipe cutter, a pair of nippers, …). Let the remaining oil drip out in case the recovery was not complete.

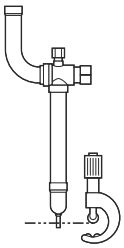

Wait until all oil is dripped out.

7 Cut the pinched piping off with a pipe cutter just above the brazing point or marking if there is no brazing point.

WARNING

Never remove the pinched piping by brazing.

Any gas or oil remaining inside the stop valve may blow off the pinched piping.

Failure to observe the instructions in procedure below properly may result in property damage or personal injury, which may be serious depending on the circumstances.

8 Wait until all oil is dripped out before continuing with the connection of the field piping in case the recovery was not complete.

10.2.3. Connecting refrigerant piping to the outdoor unit

INFORMATION

All local inter unit piping are field supplied except the accessory pipes.

NOTICE

Precautions when connecting field piping. Add brazing material as shown in the figure.

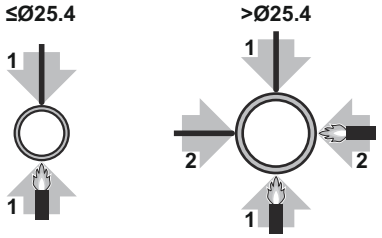

NOTICE

- Be sure to use the supplied accessory pipes when carrying out piping work in the field.
- Be sure that the field installed piping does not touch other pipes, the bottom panel or side panel. Especially for the bottom and side connection, be sure to protect the piping with suitable insulation, to prevent it from coming into contact with the casing.

Connection from the stop valves to the field piping can be done by using accessory pipes supplied as accessory.

NOTICE

Make sure that the onsite piping does not come in contact with other piping, the bottom frame or side panels of the unit.

The connections to the branch kits are the responsibility of the installer (field piping).

10.2.4. Branching the refrigerant piping

- For installation of the refrigerant branching kit, refer to the installation manual delivered with the kit.

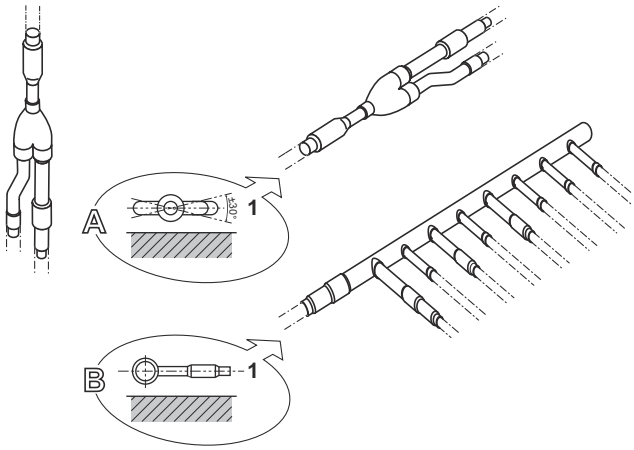

1 Horizontal surface

1 Mount the refnet joint so that it branches either horizontally or vertically.

2 Mount the refnet header so that it branches horizontally.

- Installation of the multi connection piping kit.

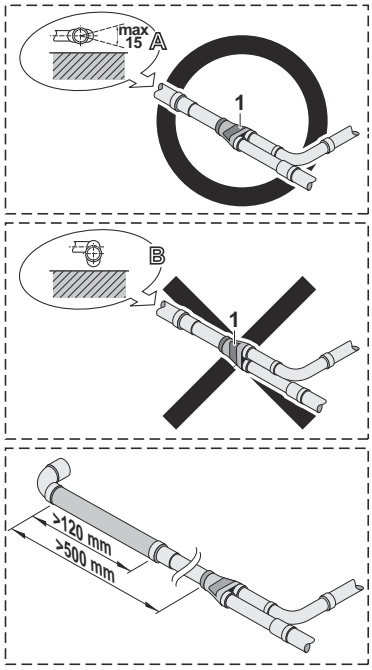

1 Install the joints horizontally, so that the caution label (1) attached to the joint comes to the top.
   - Do not tilt the joint more than 15° (see view A).
   - Do not install the joint vertically (see view B).

2 Make sure that the total length of the piping connected to the joint is absolute straight for more than 500 mm. Only if a straight field piping of more than 120 mm is connected, more than 500 mm of straight section can be ensured.

3 Improper installation may lead to malfunction of the outdoor unit.

10.3. Guidelines for handling stop valve

10.3.1. Cautions on handling the stop valve

- Make sure to keep both stop valves open during operation.
- The figure below shows the name of each part required in handling the stop valve.
- The stop valve is factory closed.

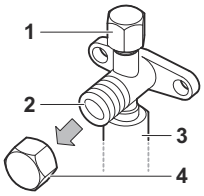

1 Service port and service port cover
2 Stop valve
3 Field piping connection
4 Stop valve cover

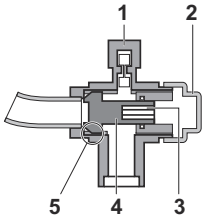

1 Service port
2 Cap
3 Hexagon hole
4 Shaft
5 Seal

10.3.2. How to use the stop valve

Opening the stop valve

1 Remove the valve cover.
2 Insert a hexagon wrench into the stop valve and turn the stop valve counterclockwise.
3 When the stop valve cannot be turned any further, stop turning. The valve is now open.

To fully open the Ø19.1 or Ø25.4 gas line stop valve, turn the hexagonal wrench until a torque between 27 and 33 N•m is achieved. Inadequate torque may cause leakage of refrigerant and breakage of the stop valve cap.

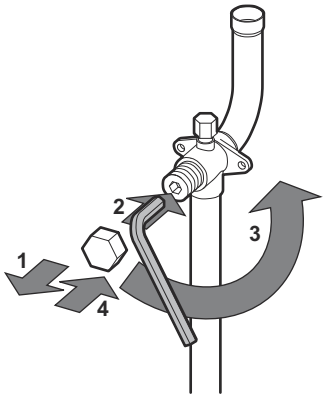

NOTICE

Pay attention that mentioned torque range is applicable for opening Ø19.1 and Ø25.4 gas line stop valves only.

Closing the stop valve

1 Remove the valve cover.
2 Insert a hexagon wrench into the stop valve and turn the stop valve clockwise.
3 When the stop valve cannot be turned any further, stop turning. The valve is now closed.

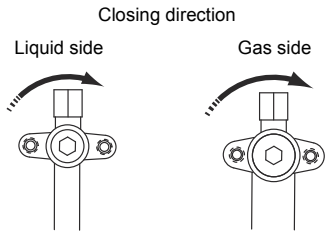

10.3.3. Cautions on handling the stop valve cover

- The stop valve cover is sealed where indicated by the arrow. Take care not to damage it.
- After handling the stop valve, make sure to tighten the stop valve cover securely. For the tightening torque, refer to the table below.
- Check for refrigerant leaks after tightening the stop valve cover.

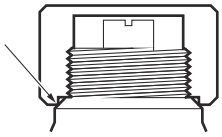

10.3.4. Cautions on handling the service port

- Always use a charge hose equipped with a valve depressor pin, since the service port is a Schrader type valve.
- After handling the service port, make sure to tighten the service port cover securely. For the tightening torque, refer to the table below.
- Check for refrigerant leaks after tightening the service port cover.

10.3.5. Tightening torques

Stop valve size (mm)	Tightening torque N•m (turn clockwise to close)			
	Shaft			
	Valve body	Hexagonal wrench	Cap (valve lid)	Service port
Ø9.5	5.4~6.6	4 mm	13.5~16.5	11.5~13.9
Ø12.7	8.1~9.9		18.0~22.0	
Ø15.9	13.5~16.5	6 mm	23.0~27.0	
Ø19.1	27.0~33.0	8 mm	22.5~27.5	
Ø25.4				

10.4. Leak test and vacuum drying

It is very important that all refrigerant piping work is done before the units (outdoor or indoor) are powered on.

When the units are powered on, the expansion valves will initialize. This means that they will close. Leak test and vacuum drying of field piping and indoor units is impossible when this happens.

Therefore, there will be explained 2 methods for initial installation, leak test and vacuum drying.

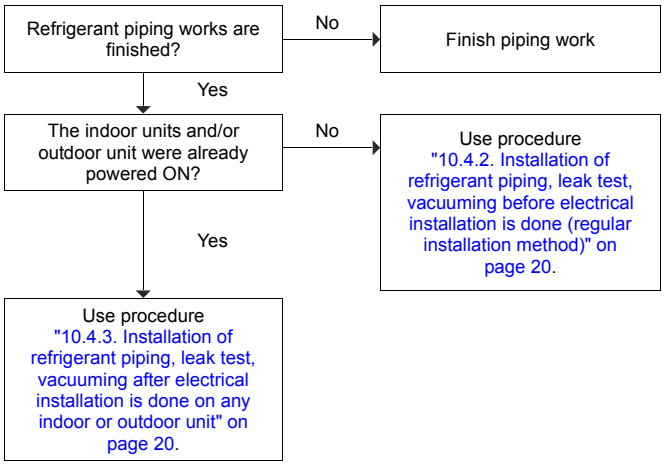

10.4.1. General guidelines

- Use a 2-stage vacuum pump with a non-return valve which can evacuate to a gauge pressure of –100.7 kPa (5 Torr absolute, –755 mm Hg).
- Connect the vacuum pump to the service port of all stop valves to increase efficiency (refer to "10.4.4. Setup" on page 20).

NOTICE

Do not purge the air with refrigerants. Use a vacuum pump to evacuate the installation.

10.4.2. Installation of refrigerant piping, leak test, vacuuming before electrical installation is done (regular installation method)

When all piping work is complete, it is necessary to:

- Check for any leakages in the refrigerant piping.
- Perform vacuum drying to remove all moisture, air or nitrogen in the refrigerant piping.

If there is a possibility of moisture being present in the refrigerant piping (for example, rainwater may have entered the piping), carry out the vacuum drying procedure below until all moisture has been removed.

All piping inside the unit has been factory tested for leaks.

Only field installed refrigerant piping needs to be checked. Therefore, make sure that all the outdoor unit stop valves are firmly closed before performing leak test or vacuum drying.

NOTICE

Make sure that all (field supplied) field piping valves are OPEN (not outdoor unit stop valves!) before you start leak test and vacuuming.

See "10.4.4. Setup" on page 20 and "10.4. Leak test and vacuum drying" on page 19.

10.4.3. Installation of refrigerant piping, leak test, vacuuming after electrical installation is done on any indoor or outdoor unit

Apply outdoor unit setting [2-21]=1 (refer to "15.2. Monitoring function and field settings" on page 37) before starting leak test and vacuuming. This setting will open field expansion valves to guarantee a R410A piping pathway.

NOTICE

- Make sure that all (field supplied) field piping valves are OPEN (not outdoor unit stop valves!) before you start leak test and vacuuming.
- Make sure that all indoor units connected to the outdoor unit are powered on.
- Wait until the outdoor unit has finished the initialisation to apply setting [2-21].

When all piping work is complete, it is necessary to:

- Check for any leakages in the refrigerant piping.
- Perform vacuum drying to remove all moisture, air or nitrogen in the refrigerant piping.

If there is a possibility of moisture being present in the refrigerant piping (for example, rainwater may have entered the piping), first carry out the vacuum drying procedure below until all moisture has been removed.

All piping inside the unit has been factory tested for leaks.

Only field installed refrigerant piping needs to be checked. Therefore, make sure that all the stop valves are firmly closed before performing leak test or vacuum drying.

See "10.4.4. Setup" on page 20 and "10.4. Leak test and vacuum drying" on page 19.

10.4.4. Setup

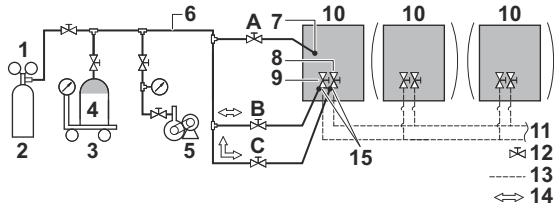

1 Pressure reducing valve
2 Nitrogen
3 Measuring instrument
4 Refrigerant R410A tank (siphon system)
5 Vacuum pump
6 Charge hose
7 Refrigerant charge port
8 Gas line stop valve
9 Liquid line stop valve
10 Outdoor unit
11 To indoor unit
12 Stop valve
13 Field piping
14 Gas flow
15 Stop valve service port
A Valve A
B Valve B
C Valve C

Which valves?	State of valves
State of the valves A, B, and C and the stop valve	Performing the airtightness test and vacuum drying (Valve A must always be shut. Otherwise the refrigerant in the unit will pour out.)
Valve A	Close
Valve B	Open
Valve C	Open
Liquid side stop valve	Close
Gas side stop valve	Close

NOTICE

The connections to the indoor units and all indoor units should also be leak and vacuum tested. Keep any possible (field supplied) field piping valves open as well.

Refer to the indoor unit installation manual for more details. Leak test and vacuum drying should be done before the power supply is set to the unit. If not, see also the flow chart earlier described in this chapter (see "10.4. Leak test and vacuum drying" on page 19).

10.4.5. Leak test

The leak test must satisfy the specifications of EN 378-2:

1 Vacuum leak test:

1.1 Evacuate the system from the liquid and gas piping to –100.7 kPa (5 Torr) for more than 2 hours.

1.2 Once reached, turn off the vacuum pump and check that the pressure does not rise for at least 1 minute.

1.3 Should the pressure rise, the system may either contain moisture (see vacuum drying below) or have leaks.

2 Pressure leak test:

2.1 Break the vacuum by pressurizing with nitrogen gas to a minimum gauge pressure of 0.2 MPa (2 bar). Never set the gauge pressure higher than the maximum operation pressure of the system, i.e. 3.3 MPa (33 bar).

2.2 Test for leaks by applying a bubble test solution to all piping connections.

2.3 Discharge all nitrogen gas.

NOTICE

Make sure to use a recommended bubble test solution from your wholesaler. Do not use soap water, which may cause cracking of flare nuts (soap water may contain salt, which absorbs moisture that will freeze when the piping gets cold), and/or lead to corrosion of flared joints (soap water may contain ammonia which causes a corrosive effect between the brass flare nut and the copper flare.

10.4.6. Vacuum drying

To remove all moisture from the system, proceed as follows:

1. Evacuate the system for at least 2 hours to a target vacuum of –100.7 kPa.
2. Check that, with the vacuum pump turned off, the target vacuum is maintained for at least 1 hour.
3. Should you fail to reach the target vacuum within 2 hours or maintain the vacuum for 1 hour, the system may contain too much moisture.
4. In that case, break the vacuum by pressurizing with nitrogen gas to a gauge pressure of 0.05 MPa (0.5 bar) and repeat steps 1 to 3 until all moisture has been removed.
5. The outdoor stop valves can now be opened, and/or additional refrigerant can be charged (see "14.4. Method for adding refrigerant" on page 32).

INFORMATION

After opening the stop valve, it is possible that the pressure in the refrigerant piping does not rise. This might be caused by e.g., the closed state of the expansion valve in the outdoor unit circuit, but does not present any problem for correct operation of the unit.

NOTICE

The connections to the indoor units and all indoor units should also be leak and vacuum tested. Keep, if existing, all (field supplied) field valves to the indoor units open as well.

Leak test and vacuum drying should be done before the power supply is set to the unit. If not, see "10.4. Leak test and vacuum drying" on page 19 for more information.

11. Pipe insulation

After finishing the leak test and vacuum drying, the piping must be insulated. Take into account the following points:

- Make sure to insulate the connection piping and refrigerant branch kits entirely.
- Be sure to insulate the liquid and gas piping (for all units).
- Use heat resistant polyethylene foam which can withstand a temperature of 70°C for liquid piping and polyethylene foam which can withstand a temperature of 120°C for gas piping.
- Reinforce the insulation on the refrigerant piping according to the installation environment.

Ambient temperature	Humidity	Minimum thickness
≤30°C	75% to 80% RH	15 mm
>30°C	≥80% RH	20 mm

Condensation might form on the surface of the insulation.

- If there is a possibility that condensation on the stop valve might drip down into the indoor unit through gaps in the insulation and piping because the outdoor unit is located higher than the indoor unit, this must be prevented by sealing up the connections. See below figure.

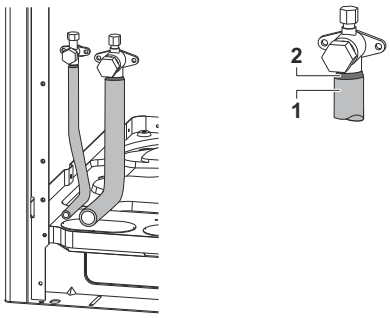

1 Insulation material
2 Caulking etc.

12. Electrical wiring work

12.1. Precautions on electrical wiring work

WARNING

Electrical installation. All field wiring and components must be installed by a licensed electrician and must comply with the applicable legislation.

NOTICE

Electrical wiring work recommendations. To persons in charge of electrical wiring work: Do not operate the unit until the refrigerant piping is complete. "10.4. Leak test and vacuum drying" on page 19. Running the unit before the piping is ready will break the compressor.

For the existing power supply and transmission wiring, check that the specifications match the requirements as described in this chapter and that other parts (especially terminals) do not appear to have deteriorated. Implement appropriate procedures (e.g., replacement) if required.

DANGER: Electrical shock

See "2. General safety precautions" on page 2.

WARNING

- A main switch or other means for disconnection, having a contact separation in all poles, must be incorporated in the fixed wiring in accordance with the applicable legislation.
- Use only copper wires.
- All field wiring must be carried out in accordance with the wiring diagram supplied with the unit and the instructions given below.
- Never squeeze bundled cables and be sure that it does not come in contact with the non-insulated piping and sharp edges. Be sure no external pressure is applied to the terminal connections.
- Power supply wires must be attached securely.
- If the power supply has a missing or wrong N-phase, equipment will break down.
- Be sure to establish an earth. Do not earth the unit to a utility pipe, surge absorber, or telephone earth. Incomplete earth may cause electrical shock.
- Be sure to install an earth leakage protector in accordance with the applicable legislation. Failure to do so may cause electric shock or fire.
- Be sure to use a dedicated power circuit, never use a power supply shared by another appliance.
- When installing the earth leakage protector be sure that it is compatible with the inverter (resistant to high frequency electric noise) to avoid unnecessary opening of the earth leakage protector.
- As this unit is equipped with an inverter, installing a phase advancing capacitor not only will deteriorate power factor improvement effect, but also may cause a capacitor abnormal heating accident due to high-frequency waves. Therefore, never install a phase advancing capacitor.
- Be sure to install the required fuses or circuit breakers.
- Do not operate until refrigerant piping work is completed. (If operated before completion of the piping work, the compressor may break down.)
- Never remove a thermistor, sensor, etc., when connecting power wiring and transmission wiring.
  (If operated without thermistor, sensor, etc., the compressor may break down.)
- The reversed phase protection detector of this product only functions when the product starts up. Consequently reversed phase detection is not performed during normal operation of the product.
- The reversed phase protection detector is designed to stop the product in the event of an abnormality when the product is started up.
- Replace two of the three phases (L1, L2, and L3) during reverse-phase protection abnormality.
- If there exists the possibility of reversed phase after a momentary black out and the power goes on and off while the product is operating, attach a reversed phase protection circuit locally. Running the product in reversed phase can break the compressor and other parts.

Point of attention regarding quality of the public electric power supply

This equipment complies with respectively:

- EN/IEC 61000-3-11(4) provided that the system impedance Z_{sys} is less than or equal to Z_{max}.
- EN/IEC 61000-3-12(5) provided that the short-circuit power S_{sc} is greater than or equal to the minimum S_{sc} value.

At the interface point between the user's supply and the public system. It is the responsibility of the installer or user of the equipment to ensure, by consultation with the distribution network operator if necessary, that the equipment is connected only to a supply with respectively:

- Z_{sys} less than or equal to Z_{max}.
- S_{sc} greater than or equal to the minimum S_{sc} value.

	$Z_{max}(\Omega)$	Minimum S_{sc} value (kVA)
RXYQQ8	—	1216
RXYQQ10	—	564
RXYQQ12	—	615
RXYQQ14	—	917
RXYQQ16	—	924
RXYQQ18	—	873
RXYQQ20	—	970
RXYQQ22	—	1179
RXYQQ24	—	2140
RXYQQ26	—	1532
RXYQQ28	—	1539
RXYQQ30	—	1488
RXYQQ32	—	1848
RXYQQ34	—	1797
RXYQQ36	—	1894
RXYQQ38	—	2750
RXYQQ40	—	2052
RXYQQ42	—	2412

INFORMATION

Multi units are standard combinations.

12.2. Internal wiring – Parts table

Refer to the wiring diagram sticker on the unit. The abbreviations used are listed below:

A1P.....Printed circuit board (main)
A2P/A5P.....Printed circuit board (noise filter)
A3P/A6P.....Printed circuit board (inv)
A4P/A7P.....Printed circuit board (fan)
BS1~BS3.....Push button switch (A1P) (mode, set, return)
C32,C66 .....Capacitor (A3P, A6P)
C47,C48 .....Capacitor
DS1,DS2 .....DIP switch (A1P)
E1HC, E2HC .....Crankcase heater
F1U,F2U.....Fuse (250 V, 3.15 A, T) (A1P)
F101U.....Fuse (A4P, A7P)
F400U.....Fuse (A2P, A5P)
F410U~F412U.....Fuse (A2P, A5P)
F601U.....Fuse (A6P)
HAP .....Pilot lamp (A1P) (service monitor - green)
K1M .....Magnetic contactor (A3P, A6P)
K1R .....Magnetic relay (A3P, A6P)
K3R .....Magnetic relay (Y3S) (A2P, A5P, A6P)

(4) European/International Technical Standard setting the limits for voltage changes, voltage fluctuations and flicker in public low-voltage supply systems for equipment with rated current ≤75 A.
(5) European/International Technical Standard setting the limits for harmonic currents produced by equipment connected to public low-voltage systems with input current >16 A and ≤75 A per phase.

K4R..... Magnetic relay (Y2S)
K5R..... Magnetic relay (Y4S)
K6R..... Magnetic relay (Y5S)
K7R..... Magnetic relay (E1HC)
K8R..... Magnetic relay (E2HC)
K10R..... Magnetic relay (option)
K11R..... Magnetic relay (Y1S)
L1R~L3R ..... Reactor
M1C, M2C ..... Motor (compressor)
M1F,M2F..... Motor (fan)
PS..... Switching power supply (A1P, A3P, A6P)
Q1LD ..... Leakage detection circuit (A1P)
Q1RP..... Phase reversal detection circuit (A1P)
R1 ..... Resistor
R2, R3 ..... Resistor (A3P, A6P)
R24 ..... Resistor (current sensor) (A4P, A7P)
R77 ..... Resistor (current sensor) (A3P, A6P)
R78 ..... Resistor (A3P, A6P)
R313 ..... Resistor (current sensor)
R865, R867 ..... Resistor
R1T..... Thermistor (air) (A1P)
R21T, R22T ..... Thermistor (discharge) (M1C, M2C, discharge)
R3T..... Thermistor (accumulator)
R4T..... Thermistor (heat exc. liq. pipe)
R5T..... Thermistor (subcool liq. pipe)
R6T..... Thermistor (heat exc. gas pipe)
R7T..... Thermistor (heat exc.de-icer)
R8T..... Thermistor (M2C body)
S1NPH..... Pressure sensor (high)
S1NPL ..... Pressure sensor (low)
S1PH~S4PH..... Pressure switch (high)
SE1~SE3..... 7-segment display
T1A ..... Current sensor
V1R..... Power module (A3P, A6P)
V1R..... Power module (A4P, A7P)
V2R..... Power module
X1A~X4A..... Connector (M2F, M1F)
X3A, X5A, X6A ..... Connector (check the residual charge)
X1M ..... Terminal strip (power supply)
X1M ..... Terminal strip (control) (A1P)
Y1E..... Electronic expansion valve (main)
Y2E..... Electronic expansion valve (injection)
Y1S..... Solenoid valve (main)
Y2S..... Solenoid valve (accumulator oil return)
Y3S..... Solenoid valve (oil 1)
Y4S..... Solenoid valve (oil 2)
Z1C~Z7C ..... Noise filter (ferrite core)
Z1F ..... Noise filter (with surge absorber)
L1,L2,L3..... Live
N ..... Neutral
..... Field wiring
..... Terminal strip
..... Connector
..... Terminal
..... Protective earth (screw)
BLK..... Black
BLU..... Blue
BRN ..... Brown
GRN..... Green
GRY..... Grey
ORG ..... Orange
PNK ..... Pink
RED ..... Red
WHT ..... White
YLW ..... Yellow

Connector for optional accessories:

X14A..... Connector (drain pan heater)
X37A..... Connector (power adapter)
X66A..... Connector (remote switching cool/heat selector)

INFORMATION

The wiring diagram on the outdoor unit is only for the outdoor unit. For the indoor unit or optional electrical components, refer to the wiring diagram of the indoor unit.

12.3. System overview of field wiring

Field wiring consists of power supply (always including earth) and indoor-outdoor communication (= transmission) wiring.

Examples:

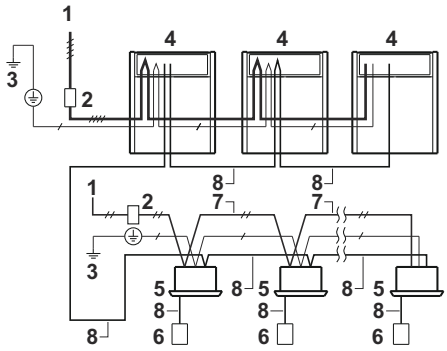

1 Field power supply (with earth leakage protector)
2 Main switch
3 Earth connection
4 Outdoor unit
5 Indoor unit
6 User interface
7 Power supply wiring (sheathed cable) (230 V)
8 Transmission wiring (sheathed cable) (16 V)
Power supply 3N~ 50 Hz
Power supply 1~ 50 Hz
Earth wiring

12.4. Opening and closing the electrical component box

CAUTION

- Do not apply excessive force when opening the electronic component box cover. Excessive force can deform the cover, resulting in entering of water to cause equipment failure.
- When closing the electrical component box cover, make sure that the sealing material on the lower back side of the cover is not caught and bend towards the inside.

RXYQQ8~12

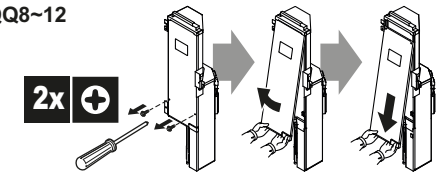

RXYQQ14~20

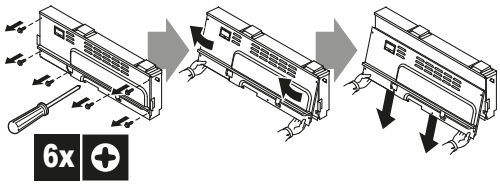

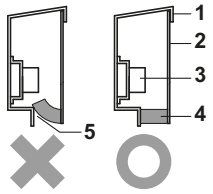

1 Electrical component box cover
2 Front side
3 Power supply terminal block
4 Sealing material
5 Moisture and dirt could enter

X Not allowed
O Allowed

12.5. Requirements

The power supply must be protected with the required safety devices, i.e. a main switch, a slow blow fuse on each phase and an earth leakage protector in accordance with the applicable legislation.

Selection and sizing of the wiring should be done in accordance with the applicable legislation based on the information mentioned in the table below.

	Minimum circuit ampere	Recommended fuses
RXYQQ8	16.1 A	20 A
RXYQQ10	22.0 A	25 A
RXYQQ12	24.0 A	32 A
RXYQQ14	27.0 A	32 A
RXYQQ16	31.0 A	40 A
RXYQQ18	35.0 A	40 A
RXYQQ20	39.0 A	50 A
RXYQQ22	46.0 A	63 A
RXYQQ24	46.0 A	63 A
RXYQQ26	51.0 A	63 A
RXYQQ28	55.0 A	63 A
RXYQQ30	59.0 A	80 A
RXYQQ32	62.0 A	80 A
RXYQQ34	66.0 A	80 A
RXYQQ36	70.0 A	80 A
RXYQQ38	76.0 A	100 A
RXYQQ40	81.0 A	100 A
RXYQQ42	84.0 A	100 A
For all models: Phase and frequency: 3N~ 50 Hz Voltage: 380-415 V Transmission line section: 0.75~1.25 mm^2, maximum length is 1000 m.		

INFORMATION

Multi units are standard combinations.

If the total transmission wiring exceeds these limits, it may result in communication error.

NOTICE

When using residual current operated circuit breakers, be sure to use a high-speed type 300 mA rated residual operating current.

12.6. Routing

It is important to keep the power supply and the transmission wiring separated from each other. In order to avoid any electrical interference the distance between both wiring should always be at least 25 mm.

12.6.1. Transmission wiring routing

The transmission wiring outside the unit should be wrapped and routed together with the field piping.

Field piping can be routed from front or bottom of the unit (going left or right). Refer to "10.2. Connecting the refrigerant piping" on page 17.

Rules for transmission wiring routing

- Be sure to follow the limits below. If the unit-to-unit cables are beyond these limits, it may result in malfunction of transmission:
  - Maximum wiring length: 1000 m.
  - Total wiring length: 2000 m.
  - Maximum inter unit wiring length between outdoor units: 30 m.
  - Transmission wiring to cool/heat selector: 500 m.
  - Maximum number of branches: 16.
- Maximum number of independent interconnectable systems: 10.
- Up to 16 branches are possible for unit-to-unit cabling. No branching is allowed after branching (see figure below).

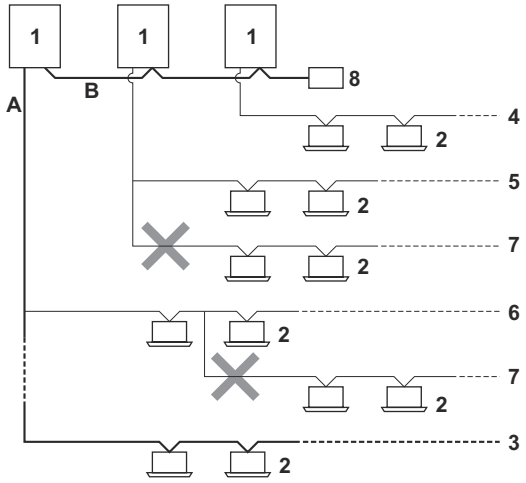

1 Outdoor unit
2 Indoor unit
3 Main line
4 Branch line 1
5 Branch line 2
6 Branch line 3
7 No branch is allowed after branch
8 Central user interface (etc...)
A Transmission wiring between outdoor unit and indoor unit(s)
B Transmission wiring between outdoor units

- Never connect the power supply to transmission wiring terminal block. Otherwise the entire system may break down.
- Never connect 400 V to the terminal block of the transmission wiring. Doing so will break the entire system:
  - The wiring from the indoor units must be connected to the F1/F2 (In-Out) terminals on the PC board in the outdoor unit.
  - After installing the transmission wires inside the unit, wrap them along with the on-site refrigerant pipes using finishing tape, as shown in figure below.

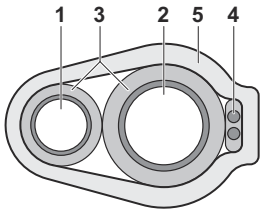

1 Liquid pipe
2 Gas pipe
3 Insulator
4 Transmission wiring (F1/F2)
5 Finishing tape

For the above wiring, always use vinyl cords with 0.75 to 1.25 mm^2 sheath or cables (2-core wires). (3-core wire cables are allowable for the cooler/heater changeover user interface only.)

NOTICE

- Be sure to keep the power line and transmission line apart from each other. Transmission wiring and power supply wiring may cross, but may not run parallel.
- Transmission wiring and power supply wiring may not touch internal piping (except INV PCB cooling pipe) in order to avoid wire damage due to high temperature piping.
- Firmly close the lid and arrange the electrical wires so as to prevent the lid or other parts from coming loose.

Transmission wiring routing to the unit and inside the unit. Transmission wiring can be routed through the front side only:

- Fix transmission wire with tie wrap to low voltage wiring. See figures below, item 6.
- Fix transmission wire with tie wrap to heat exchanger fixing plate (through oblong hole). See figures below, item 2.
- Possible transmission wire entrance hole (close hole to avoid bugs/dirt from entering). See figures below, item 4.
- Possible transmission wire entrance hole (close hole to avoid bugs/dirt from entering). Fix transmission wiring to pipe insulation with tie wraps. See figures below, item 5.
- Inside the electronic component box, the transmission wire should be fixed on several locations with tie wraps to low voltage wiring. See figures below, items 2 and 6.

RXYQQ8~12

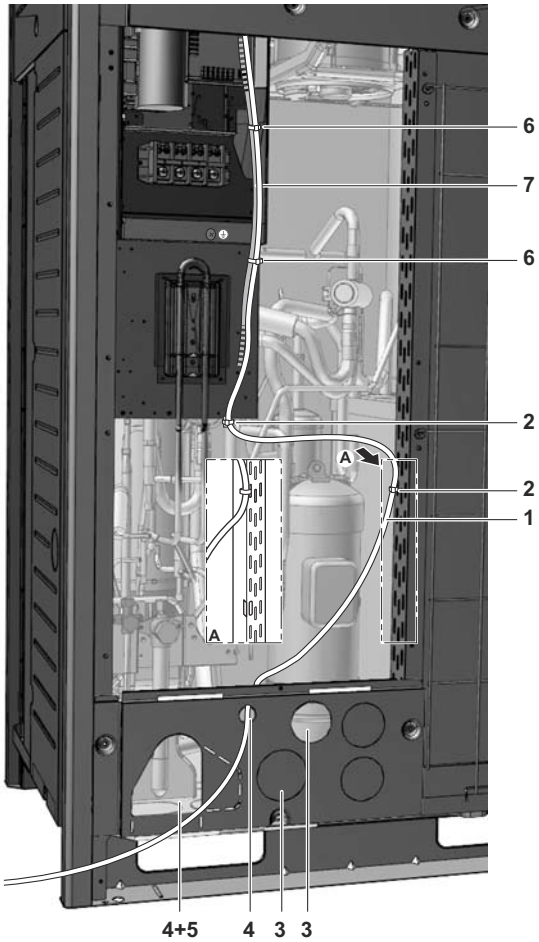

RXYQQ14~20

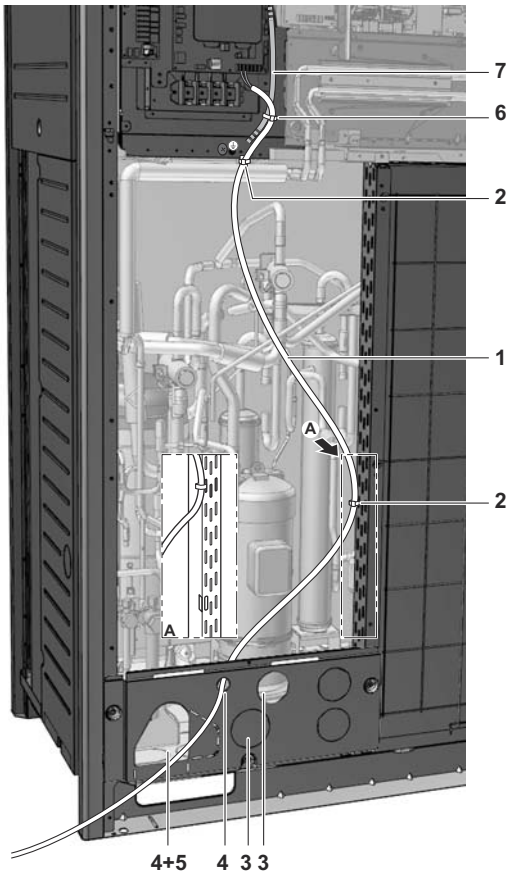

1 Transmission wiring
2 Fix wiring with tie wrap
3 Possible power supply wire entrance hole(6)
4 Possible transmission wire entrance hole(6)
5 Possible transmission wire entrance hole.(6) Fix wiring to pipe insulation with tie wraps
6 Inside the electronic component box, the wiring should be fixed on several locations with tie wraps to the factory mounted low voltage wiring.
7 Factory mounted low voltage wiring

12.6.2. Power supply wiring routing

Power supply wire routing to the unit and inside the unit. The power supply wiring can be routed from the front and left side.

- Left side. The metal conduit hole on the left (D) can be opened as follows:

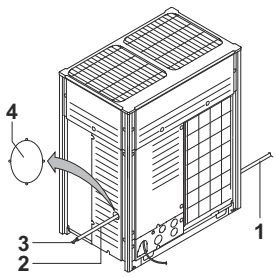

1 Power supply inside a conduit
2 Conduit
3 Power supply wire
4 Knockout hole

(6) Knockout hole has to be removed. Close the hole to avoid small animals or dirt from entering.

- Front side. In order to route the power supply from the front side, the available knockout holes (C) can be used:
  - Fix the power supply cable to the foreseen wire clips with a tie wrap. See figures below, item 2.
  - Fix the power supply cable to the heat exchanger fixing plate (through oblong hole). See figures below, item 2.
  - Front plate: possible power supply wire entrance hole (close hole to avoid bugs/dirt from entering). See figures below, item 3.
  - Side plate: possible power supply wire entrance hole (close hole to avoid bugs/dirt from entering). Use conduit. See figures below, item 4.

RXYQQ8~12

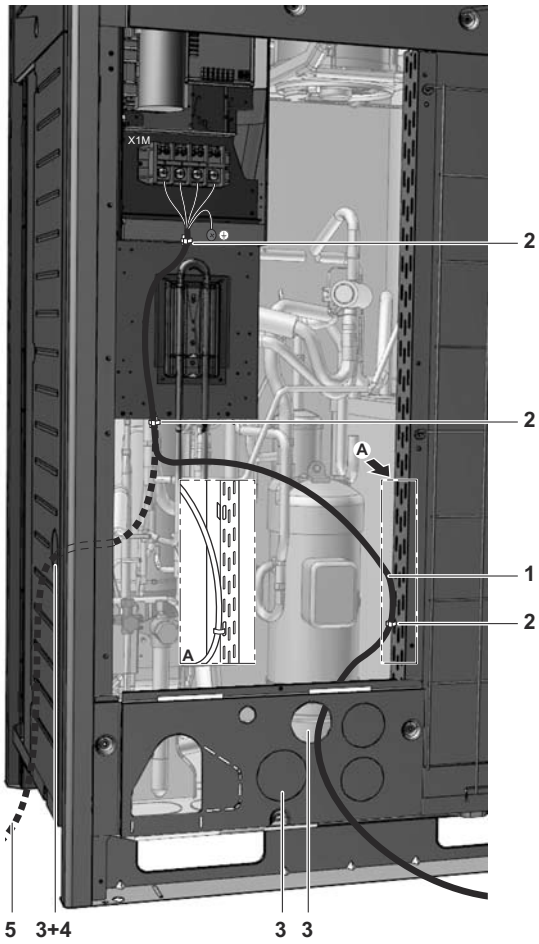

RXYQQ14~20

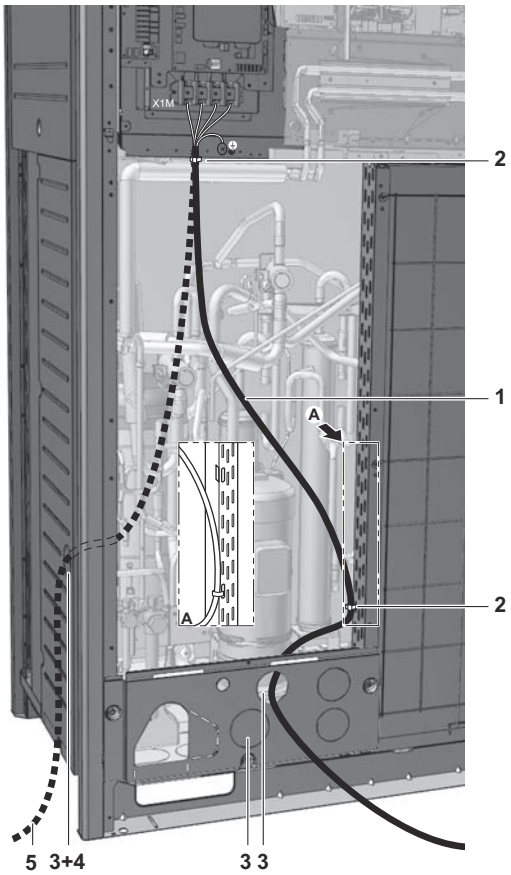

1 Power supply wire
2 Fix wiring with tie wrap
3+4 Possible power supply wire entrance hole(7)
5 Alternative power supply routing

12.6.3. Precautions when knocking out knockout holes

- To punch a knockout hole, hit on it with a hammer.
- After knocking out the holes, we recommend removing any burrs and paint the edges and areas around the holes using repair paint to prevent rusting.
- When passing electrical wiring through the knockout holes. prevent damage to the wires by wrapping the wiring with protective tape, putting the wires through field supplied protective wire conduits at that location, or install suitable field supplied wire nipples or rubber bushings into the knockout holes.

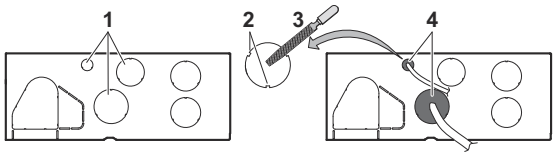

1 Knockout hole
2 Burr
3 Remove burrs
4 If there are any possibilities that small animals enter the system through the knockout holes, plug the holes with packing materials (to be prepared on-site)

(7) Knockout hole has to be removed. Close the hole to avoid small animals or dirt from entering.

12.7. Connection

This chapter gives an explanation how to route and connect the wiring within the unit.

12.7.1. Connection of transmission wiring to the system

In case of single outdoor unit installation

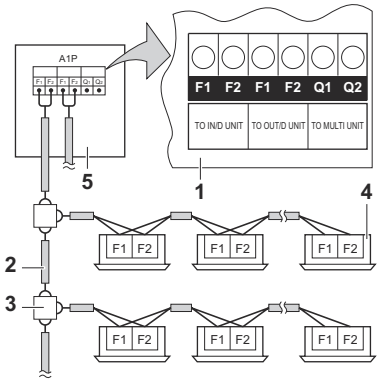

1 Outdoor unit PCB board (A1P)
2 Use the conductor of sheathed wire (2 wire) (no polarity)
3 Terminal board (field supply)
4 Indoor unit
5 Outdoor unit

In case of multi outdoor unit installation

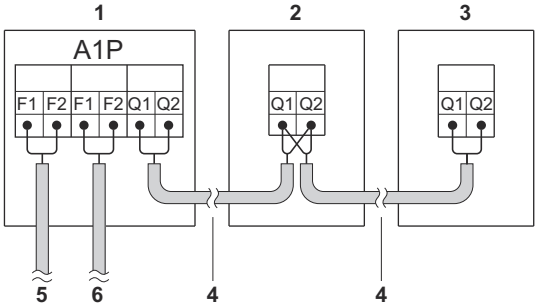

1 Unit A (master unit)
2 Unit B (slave unit)
3 Unit C (slave unit)
4 Inter unit transmission wiring (Q1/Q2)
5 Outdoor-indoor unit transmission (F1/F2)
6 Outdoor-other system transmission (F1/F2)

- The interconnecting wiring between the outdoor units in the same piping system must be connected to the Q1/Q2 (Out Multi) (4) terminals. Connecting the wires to the F1/F2 terminals results in system malfunction.
- The wiring for the other systems must be connected to the F1/F2 (Out-Out) (6) terminals of the PCB board in the outdoor unit to which the interconnecting wiring for the indoor units is connected.
- The base unit is the outdoor unit to which the interconnecting wiring for the indoor units is connected.

12.7.2. Connection of wiring to terminals

Transmission wiring in outdoor unit

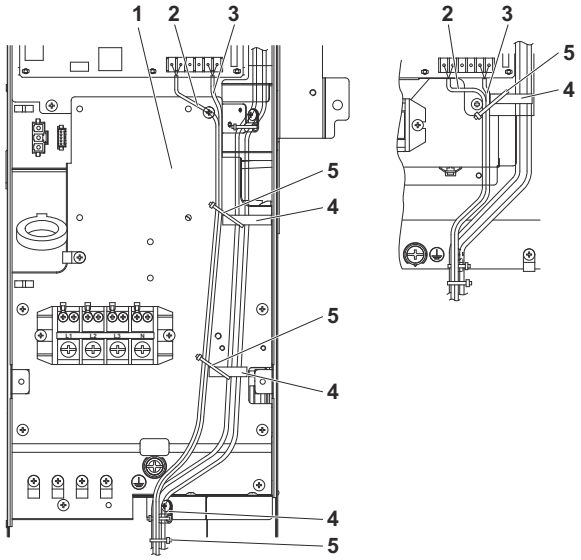

1 Fix to the indicated plastic brackets using field supplied clamping material
2 Wiring between the units (indoor-outdoor) (F1/F2 left)
3 Internal transmission wiring (Q1/Q2)
4 Plastic bracket
5 Field supplied clamps

Care should be taken for connecting the wires to the terminal block.

See the table below for the tightening torque of the transmission wiring terminals.

Screw size	Tightening torque (N•m)
M3.5 (A1P)	0.80~0.96

- Never connect the power supply to transmission wiring terminal block. Otherwise the entire system may break down.
- Be careful about polarity of the transmission wiring.

Power supply

The power supply must be clamped to the plastic bracket using field supplied clamp material.

The green and yellow striped wire must be used for earthing only (refer to the figure below).

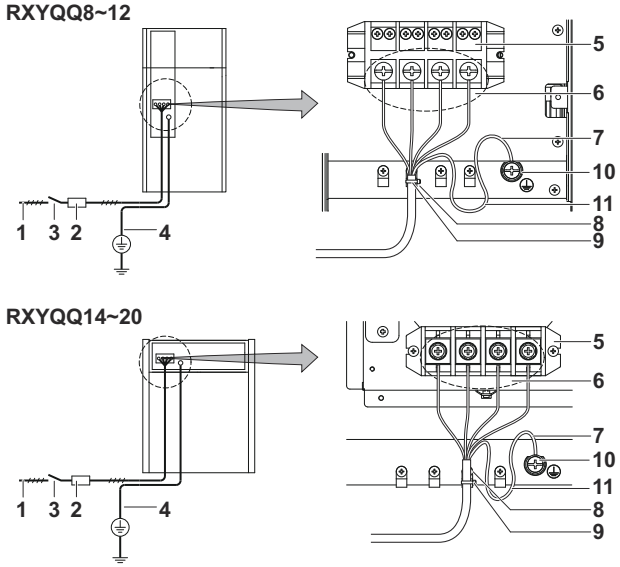

1 Power supply (380~415 V - 3N~ 50Hz)
2 Fuse
3 Earth leakage protector
4 Earth wire
5 Power supply terminal block
6 Connect each power wire: RED to L1, WHT to L2, BLK to L3 and BLU to N

7 Earth wire (GRN/YLW)
8 Clamp the power supply to the plastic bracket using a field supplied clamp to prevent external force being applied to the terminal.
9 Clamp (field supplied)
10 Cup washer
11 When connecting the earth wire, it is recommended to perform curling.

INFORMATION

Installation and routing in case the cool/heat selector is used: refer to installation manual of the cool/heat selector.

NOTICE

- When routing earth wires, secure clearance of 25 mm or more away from compressor lead wires. Failure to observe this instruction properly may adversely affect correct operation of other units connected to the same earth.
- When connecting the power supply, the earth connection must be made before the current-carrying connections are established. When disconnecting the power supply, the current-carrying connections must be separated before the earth connection is. The length of the conductors between the power supply stress relief and the terminal block itself must be as such that the current-carrying wires are tautened before the earth wire is in case the power supply is pulled loose from the stress relief.

NOTICE

Precautions when laying power wiring:

- Do not connect wiring of different thicknesses to the power terminal block (slack in the power wiring may cause abnormal heat).
- When connecting wiring which is the same thickness, do as shown in the figure below.

- For wiring, use the designated power wire and connect firmly, then secure to prevent outside pressure being exerted on the terminal board.
- Use an appropriate screwdriver for tightening the terminal screws. A screwdriver with a small head will damage the head and make proper tightening impossible.
- Over-tightening the terminal screws may break them.
- See the table below for tightening torque for the terminal screws.

Tightening torque (N•m)	
M8 (Power terminal block)	5.5~7.3
M8 (Ground)	
M3 (Inter-unit wiring terminal block)	0.8~0.97

NOTICE

Recommendations when connecting the earth wire

Wire it so that it comes through the cut out section of the cup washer. (An improper earth connection may prevent a good earthing from being achieved.)

Connecting the power supply to multiple outdoor units

To connect the power supply for multiple outdoor units to each other, ring tongues have to be used. No bare cable can be used.

The ring washer which is standard provided should be removed in that case.

Attaching both cables to the power supply terminal should be done as indicated.

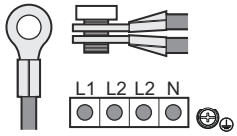

13. Making field settings

To continue the configuration of the VRV IV replacement heat pump system, it is required to give some input to the logic board of the unit. This chapter will describe how manual input is possible by operating the push buttons/DIP switches on the logic board and reading the feedback from the 7 segment displays.

For VRV IV replacement heat pump system it is alternatively possible to make several commissioning field settings through a personal computer interface (for this, option EKPCCAB* is required). The installer can prepare the configuration (off-site) on PC and afterwards upload the configuration to the system. How to connect the cable is described in "13.3. Connecting the PC configurator to the outdoor unit" on page 30.

The contents of the actual settings is discussed and explained in "15.2. Monitoring function and field settings" on page 37.

13.1. Accessing the push buttons on the logic board

It is not required to open the complete electronic component box to access the push buttons on the logic board and read out the 7 segment display(s).

To access you can remove the front inspection cover of the front plate (see figure). Now you can open the inspection cover of the electrical component box front plate (see figure). You can see the three push buttons and the three 7 segment displays and DIP switches.

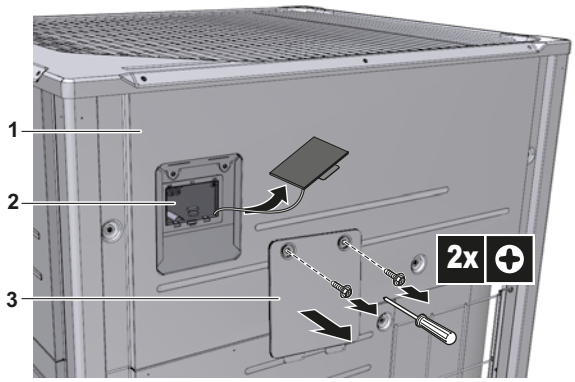

1 Service cover
2 Main PCB with 3 seven segment display and 3 push buttons
3 Electrical component box service cover

Operate the switches and push buttons with an insulated stick (such as a closed ball-point pen) to avoid touching of live parts.

Make sure to re-attach the inspection cover into the electronic component box cover and to close the front plate's inspection cover after the job is finished. During operation of the unit the front plate of the unit should be attached. Settings are still possible to be made through the inspection opening.

Location of the segment displays, buttons and DIP switches:

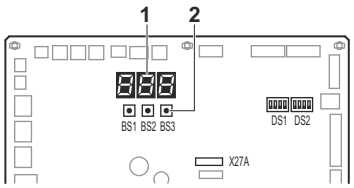

BS1 MODE for changing the set mode
BS2 SET for field setting
BS3 RETURN for field setting
DS1, DS2 DIP switches
1 7 segment displays (3x)
2 Push buttons

Segment display indications:

Off
Blinking
On

NOTICE

Make sure that all outside panels, except for the service cover on the electrical component box, are closed while working.

Close the lid of the electrical component box firmly before turning on the power.

13.2. Operating the push buttons and DIP switches on the logic board

13.2.1. Operating the push buttons

By operating the push buttons it is possible to:

- Perform special actions (automatic refrigerant charge, testrun, etc).
- Perform field settings (demand operation, low noise, etc).

Below procedure explains how to operate the push buttons to reach the required mode in the menu, select the correct setting and modify the value of the setting. This procedure can be used any time special settings and regular field setting are discussed in this manual (see "15.2. Monitoring function and field settings" on page 37).

Setting definition: [A-B]=C; A=mode; B=setting; C=setting value. A, B and C are numerical values for field settings. Parameter C has to be defined. It can be a chosen from a set (0, 1, 2, 3, 4, 5, …) or regarded as an ON/OFF (1 or 0) depending on the contents. This is informed when the field setting is explained (see "15.2. Monitoring function and field settings" on page 37).

INFORMATION

During special operation (e.g., automatic refrigerant charging, test run, etc.) or when an malfunction happened, information will contain letters and numerical values.

Functions of the push button switches which are located on the outdoor PCB (A1P)

Turn on the power supply of the outdoor unit and all indoor units. When the communication between indoor units and outdoor unit(s) is established and normal, the segment indication state will be as below (default situation when shipped from factory).

When turning on the power supply: flashing as indicated. First checks on power supply are executed (1~2 min).

When no trouble occurs: lighted as indicated (8~10 min).

Ready for operation: blank display indication as indicated.

When above situation cannot be confirmed after 12 min, the malfunction code can be checked on the indoor unit user interface and the outdoor unit segment display. Solve the malfunction code accordingly. The communication wiring should be checked at first.

INFORMATION

Be sure to turn the power on at least 6 hours before operation in order to have power running to the crank case heater.

Accessing modes

BS1 is used to change the mode you want to access.

- **Access mode 1**
  Push BS1 one time. Segment indication changes to:

- **Access mode 2**
  Push BS1 for at least 5 seconds. Segment indication changes to:

INFORMATION

If you get confused in the middle of the process, push BS1. Then it returns to idle situation (no indication on segment displays: blank, refer to "Functions of the push button switches which are located on the outdoor PCB (A1P)" on page 29).

Mode 1

Mode 1 is used to set basic settings and to monitor the status of the unit ("15.2. Monitoring function and field settings" on page 37).

- Changing and access the setting in mode 1:
  Once mode 1 is selected (push BS1 1 time), you can select the wanted setting. It is done by pushing BS2. Accessing the selected setting's value is done by pushing BS3 1 time.
- To quit and return to the initial status, press BS1.

Example:

Checking the content of parameter [1-10] (to know how many indoor units are connected to the system).

[A-B]=C in this case defined as: A=1; B=10; C=the value we want to know/monitor:

- Make sure the segment indication is as during normal operation (default situation when shipped from factory).
- Push BS1 1 time; result segment display:

  Result: mode 1 is accessed.
- Push BS2 10 times; result segment display:

  Result: mode 1 setting 10 is addressed.
- Push BS3 1 time; the value which is returned (depending on the actual field situation), is the amount of indoor units which are connected to the system.
  Result: mode 1 setting 10 is addressed and selected, return value is monitored information
- To leave the monitoring function, push BS1 1 time, you will return to the default situation when shipped from factory.

Mode 2

Mode 2 is used to set field settings of the outdoor unit and system.

- Changing and access the setting in mode 2:
  Once mode 2 is selected (push BS1 for more than 5 seconds), you can select the wanted setting. It is done by pushing BS2. Accessing the selected setting's value is done by pushing BS3 1 time.
- To quit and return to the initial status, press BS1.
- Changing the value of the selected setting in mode 2:
  - Once mode 2 is selected (push BS1 for more than 5 seconds) you can select the wanted setting. It is done by pushing BS2.
  - Accessing the selected setting's value is done by pushing BS3 1 time.
  - Now BS2 is used to select the required value of the selected setting.
  - When the required value is selected, you can define the change of value by pushing BS3 1 time.
  - Press BS3 again to start operation according to the chosen value.

Example:

Checking the content of parameter [2-18] (to define the high static pressure setting of the outdoor unit's fan).

[A-B]=C in this case defined as: A=2; B=10; C=the value we want to know/change

- Make sure the segment indication is as during normal operation (default situation when shipped from factory).
- Push BS1 for over 5 seconds; result segment display:

  Result: mode 2 is accessed.
- Push BS2 18 times; result segment display:

  Result: mode 2 setting 18 is addressed.
- Push BS3 1 time; the value which is returned (depending on the actual field situation), is the status of the setting. In the case of [2-18], default value is "0", which means the function is not active.
  Result: mode 2 setting 18 is addressed and selected, return value is the current setting situation.
- To change the value of the setting, push BS2 till the required value appears on the segment indication. When achieved, define the setting value by pushing BS3 1 time. To start operation according to the chosen setting, confirm again by pushing BS3.
- To leave the monitoring function, push BS1 2 times, you will return to the default situation when shipped from factory.

13.2.2. Operating the DIP switches

By operating the DIP switches it is possible to:

	What to do with DIP switch DS1
1	COOL/HEAT selector (refer to the manual of the cool/heat selector switch) OFF=not installed=factory setting
2-4	NOT USED DO NOT CHANGE THE FACTORY SETTING
	What to do with DIP switch DS2
1-4	NOT USED DO NOT CHANGE THE FACTORY SETTING

13.3. Connecting the PC configurator to the outdoor unit

Connection of the optional PC configurator cable to the outdoor unit has to be done on A1P. Connect the EKPCCAB* cable to the 5-pin blue connector X27A.

CAUTION

Works executed on the outdoor unit are best done under dry weather conditions to avoid water ingress.

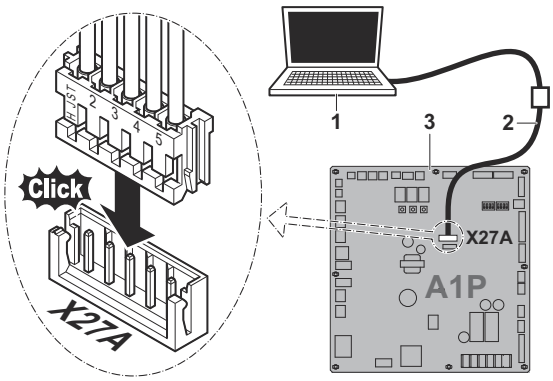

1 PC
2 Cable (EKPCCAB*)
3 Outdoor unit main PCB

14. Charging refrigerant

14.1. Precautions

NOTICE

- Refrigerant cannot be charged until field wiring has been completed.
- Refrigerant may only be charged after performing the leak test and the vacuum drying.
- When charging a system, care shall be taken that its maximum permissible charge is never exceeded, in view of the danger of liquid hammer.
- Charging with an unsuitable substance may cause explosions and accidents, so always ensure that the appropriate refrigerant R410A is charged.
- Refrigerant containers shall be opened slowly.
- Always use protective gloves and protect your eyes when charging refrigerant.
- When the refrigerant system is to be opened, refrigerant must be treated according to the applicable legislation.

DANGER: Electrical shock

See "2. General safety precautions" on page 2.

- To avoid compressor breakdown. Do not charge the refrigerant more than the specified amount.
- This outdoor unit is factory charged with refrigerant and depending on pipe sizes and pipe lengths some systems require additional charging of refrigerant. See "14.3. Calculating the additional refrigerant charge" on page 31.
- In case re-charge is required, refer to the nameplate of the unit. It states the type of refrigerant and necessary amount.

14.2. Important information regarding the refrigerant used

This product contains fluorinated greenhouse gases. Do not vent gases into the atmosphere.

Refrigerant type: R410A

GWP[(1)] value: 2087.5

[(1)] GWP=global warming potential

Please fill in with indelible ink:

- ① the factory refrigerant charge of the product,
- ② the additional refrigerant amount charged in the field and,
- ①+② the total refrigerant charge

on the fluorinated greenhouse gases label supplied with the product. The filled out label must be adhered on the inside of the product and in the proximity of the product charging port (e.g., on the inside of the service cover).

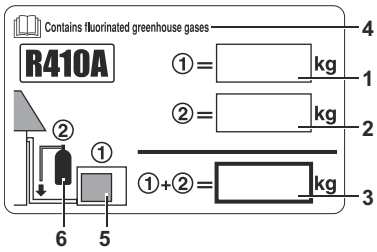

1 Factory refrigerant charge of the product: see unit name plate
2 Additional refrigerant amount charged in the field
3 Total refrigerant charge
4 Contains fluorinated greenhouse gases
5 Outdoor unit
6 Refrigerant cylinder and manifold for charging

INFORMATION

National implementation of EU regulation on certain fluorinated greenhouse gases may require to provide the appropriate official national language on the unit. Therefore, an additional multilingual fluorinated greenhouse gases label is supplied with the unit.

Sticking instructions are illustrated on the backside of that label.

14.3. Calculating the additional refrigerant charge

NOTICE

The refrigerant charge of the system must be less than 100 kg. This means that in case the calculated total refrigerant charge is equal to or more than 95 kg you must divide your multiple outdoor system into smaller independent systems, each containing less than 95 kg refrigerant charge. For factory charge, refer to the unit name plate.

14.3.1. How to calculate the additional refrigerant to be charged

Additional refrigerant to be charged=R (kg). R should be rounded off in units of 0.1 kg.

R=[(X_1 x **Ø22.2**) x 0.37+(X_2 x **Ø19.1**) x 0.26+(X_3 x **Ø15.9**) x 0.18+(X_4 x **Ø12.7**) x 0.12+(X_5 x **Ø9.5**) x 0.059+(X_6 x **Ø6.4**) x 0.022]+A

$X_{1...6}$ =Total length (m) of liquid piping size at **Øa**

A parameter (kg)	Total indoor unit capacity CR[(a)]	HP 8	HP 10+12	HP 14+16	HP 18+20
Piping length≤30 m	50%≤CR≤105%	0			0.5
	105%<CR≤130%	0.5			1
Piping length>30 m	50%≤CR≤70%	0			0.5
	70%<CR≤85%	0.3	0.5		1.0
	85%<CR≤105%	0.7	1		1.5
	105%<CR≤130%	1.2	1.5		2.0

(a) CR=Connection ratio.

INFORMATION

- When using multi models, add the sum of individual HP modules.
- Piping length is considered the distance from the outdoor unit to the farthest indoor unit.

When using metric piping, please take into account following table concerning the weight factor to be allocated. It should be substituted in the formula for R.

Inch piping size (Ø) (mm)	Weight factor	Metric piping size (Ø) (mm)	Weight factor
6.4	0.022	6	0.018
9.52	0.059	10	0.065
12.7	0.12	12	0.097
15.9	0.18	15	0.16
		16	0.18
19.1	0.26	18	0.24
22.2	0.37	22	0.35

When selecting indoor unit, following table with connection ratio (CR) limitation has to be respected: 50%≤CR≤130%. More detailed information can be found in technical engineering data.

14.4. Method for adding refrigerant

INFORMATION

If it is not possible to determine exact piping lengths of the existing field piping, it is difficult to calculate the additional refrigerant charge exactly as explained above. In such a case, make an estimation based on the known lengths and diameters by using the formula as in "14.3.1. How to calculate the additional refrigerant to be charged" on page 31 and add the additional refrigerant charge by using the automatic refrigerant charge function (in cooling mode) ONLY. The unit will provide feedback as explained in this chapter, when the required refrigerant charge is reached or not.

Make sure that the automatic refrigerant charge (in cooling mode) ambient temperature conditions are fulfilled. See also the information table in "A. Adding refrigerant by using the automatic charging function" on page 35.

14.4.1. Flow chart

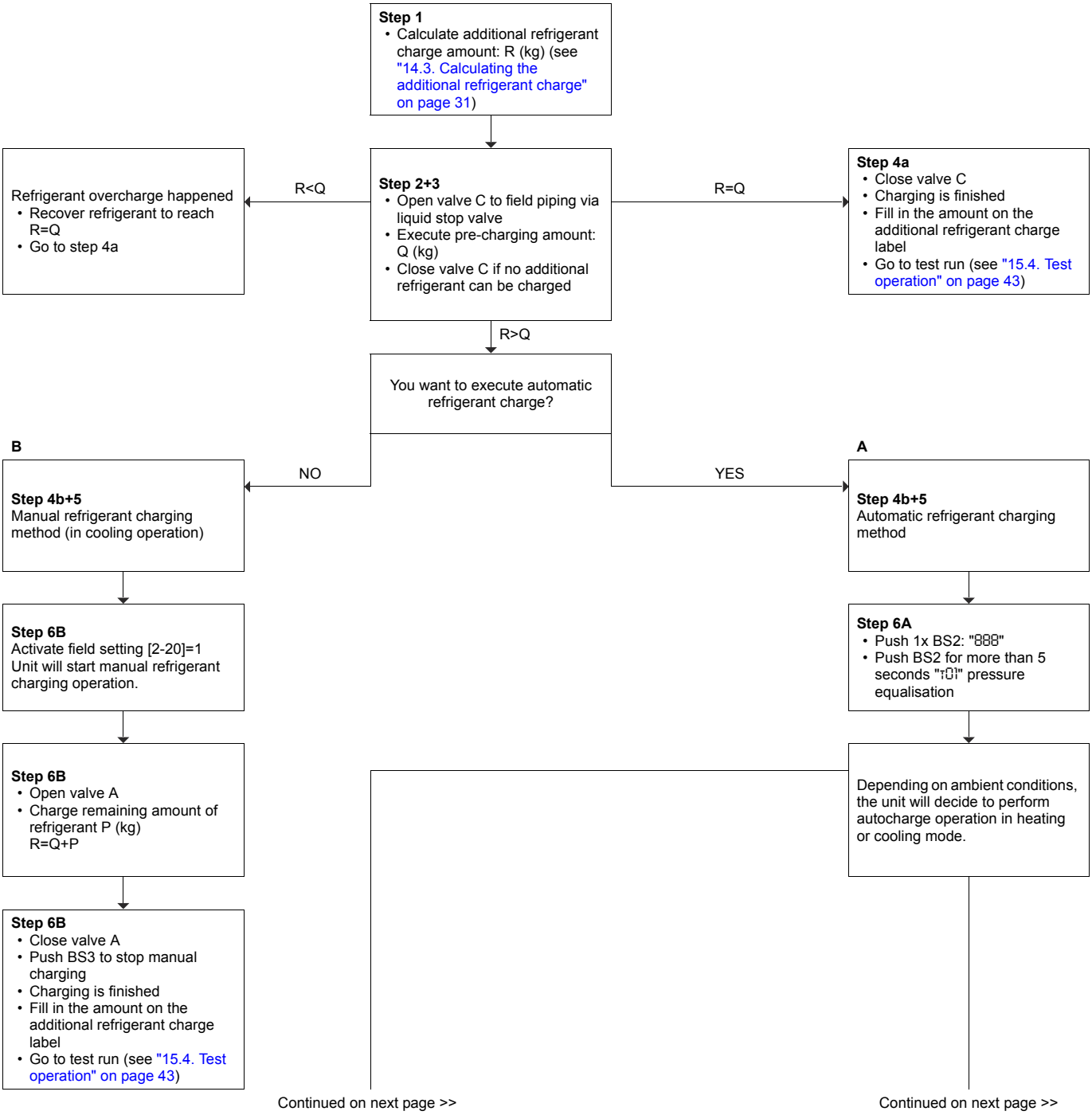

<< Continuation of previous page

Heating charging
("t22" startup control)
("t23" waiting for stable heating)

"t23" is flashing
- Push BS2 within 5 minutes
- Open valve A

Display show "t23" and low pressure value with an interval of 1 second.
- Add additional refrigerant amount P (kg)
- Close valve A
- Push BS3 to stop operation
- Ending code "t26" will appear

- Push BS2
- T_A check will be performed

- "t0X" will appear
- Push BS1
- Charging is finished
- Fill in the amount on the additional refrigerant charge label
- Go to test run (see "15.4. Test operation" on page 43)

Following codes appear: "E-2" (indoor temperature out of range) and "E-3" (outdoor temperature out of range)
- Push BS1 to leave program
- Charging is finished
- Fill in the amount on the additional refrigerant charge label
- Go to test run (see "15.4. Test operation" on page 43)

<< Continuation of previous page

Cooling charging
("t02" startup control)
("t03" waiting for stable cooling)

"t03" is flashing
- Push BS2 within 5 minutes
- Open valve A

Display show "t03" and low pressure value with an interval of 1 second.
Refrigerant will be charged automatically.
"PE"=charging nearly finished
"P9"=charging finished

OR

P (kg) was added during autocharge
R=Q+P

- Close valve A
- Push BS1 to leave program
- Charging is finished
- Fill in the amount on the additional refrigerant charge label
- Go to test run (see "15.4. Test operation" on page 43)

During grey conditions

If following codes appear: "E-2" (indoor temperature out of range) and "E-3" (outdoor temperature out of range)

In this case, perform automatic charging procedure again.

See figure "Location of valves" on page 34; for more information refer to the text in this chapter.

Be sure to charge the specified amount of refrigerant in liquid state. Since this refrigerant is a mixed refrigerant, adding it in gas form may cause the refrigerant composition to change, preventing normal operation.

■ Before charging, check whether the refrigerant cylinder is equipped with a siphon tube or not.

Charge the liquid refrigerant with the cylinder in upright position.

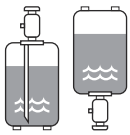

Charge the liquid refrigerant with the cylinder in upside-down position.

■ Be sure to use tools exclusively for R410A to ensure required pressure resistance and to prevent foreign materials from mixing into the system.

NOTICE

Charging with an unsuitable substance may cause explosions and accidents, so always make sure that the appropriate refrigerant (R410A) is charged. Refrigerant containers must be opened slowly.

CAUTION

- When charging a system, charging over the permissible quantity can cause liquid hammer.
- Always use protective gloves and protect your eyes when charging refrigerant.
- When the refrigerant charging procedure is done or when pausing, close the valve of the refrigerant tank immediately. If the tank is left with the valve open, the amount of refrigerant which is properly charged may get off point. More refrigerant may be charged by any remaining pressure after the unit has stopped.

NOTICE

- If the power of some units is turned off, the charging procedure cannot be finished properly.
- In case of a multiple outdoor system, turn on the power of all outdoor units.
- Make sure to turn ON the power 6 hours before starting the operation. This is necessary to warm the crankcase by the electric heater.
- If operation is performed within 12 minutes after the indoor and outdoor units are turned on, the compressor will not operate before the communication is established in a correct way between outdoor unit(s) and indoor units.
- Before starting charging procedures, check if the segment display indication of the outdoor unit A1P PCB is as normal (see "Functions of the push button switches which are located on the outdoor PCB (A1P)" on page 29). If a malfunction code is present, see "15.5. Malfunction code list" on page 44.
- Make sure all connected indoor units are recognised (see "15.2. Monitoring function and field settings" on page 37).
- Close the front panel before any refrigerant charge operation is executed. Without the front panel attached the unit cannot judge correctly whether it is operating properly or not.

NOTICE

In case of maintenance and the system (outdoor unit+field piping+indoor units) does not contain any refrigerant any more (e.g., after refrigerant reclaim operation), the unit has to be charged with its original amount of refrigerant (refer to the nameplate on the unit) by pre-charging before the automatic charging function can be started.

14.4.2. Charging method

As explained during vacuum drying method, once vacuum drying is finished, additional refrigerant charging can start.

There are two methods to charge additional refrigerant. Use the selected method following the described procedure below.

- Adding refrigerant by using the automatic refrigerant charging function.
  See "A. Adding refrigerant by using the automatic charging function" on page 35. This method uses an automated method for charging refrigerant.
- Adding refrigerant by using the manual refrigerant charging function.
  See "B. Adding refrigerant by using the manual charging function" on page 36. This method uses a manual method for charging refrigerant.

A flow chart is available which gives an overview of the possibilities and actions to be taken (see "14.4.1. Flow chart" on page 32).

To speed up the process of pre-charging refrigerant for large systems, it is recommended to first charge a portion of the refrigerant before performing automatic or manual charging. This step is included in below procedure. This step can be skipped, charging will take longer in such a case.

Follow the steps as described below and take into account whether you want to use the automatic charge function or not.

1. Calculate the additional amount of refrigerant to be added using the formula mentioned in "14.3. Calculating the additional refrigerant charge" on page 31.
2. The first 10 kg of additional refrigerant can be charged without outdoor unit operation.
   If the additional refrigerant amount is smaller than 10 kg, perform the pre-charging procedure as explained in step 3 and 4a below.
   If the additional refrigerant charge is larger than 10 kg, perform step 3 till the end of the procedure.
3. Pre-charging can be done without compressor running by connecting the refrigerant bottle only to the liquid stop valve service port (open valve C). Make sure that the stop valves are closed (valve A and B+liquid line stop valve+gas line stop valve+equalizer line stop valve).

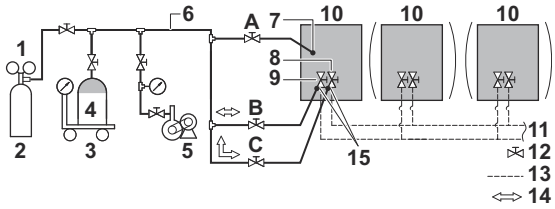

1	Pressure reducing valve
2	Nitrogen
3	Measuring instrument
4	Refrigerant R410A tank (siphon system)
5	Vacuum pump
6	Charge hose
7	Refrigerant charge port
8	Gas line stop valve
9	Liquid line stop valve
10	Outdoor unit
11	To indoor unit
12	Stop valve
13	Field piping
14	Gas flow
15	Stop valve service port
A	Valve A
B	Valve B
C	Valve C

4. a) If the calculated additional refrigerant amount is reached by above pre-charging procedure, close valve C.
   b) If the total amount of refrigerant could not be charged by pre-charging, then close valve C and go to step 5. Follow step 6 depending on the chosen charging method.

INFORMATION

If the total additional refrigerant amount was reached in step 4 (by pre-charging only), record the amount of refrigerant that was added on the additional refrigerant charge label provided with the unit and attach it on the back side of the front panel.

Perform the test procedure as described in "15.4. Test operation" on page 43.

5. After pre-charging, perform the refrigerant charge operation as shown below and charge the remaining refrigerant of the additional charging amount through valve A.
   Open the liquid and gas side stop valves. Valves A, B and C must remain closed!

INFORMATION

For a multi outdoor unit system, it is not required to connect all charge ports to a refrigerant tank.

The refrigerant will be charged with ±22 kg in 1 hour time at an outdoor temperature of 30°C DB or with ±6 kg at an outdoor temperature of 0°C DB.

If you need to speed up in case of a multiple outdoor system, connect the refrigerant tanks to each outdoor unit.

NOTICE

- The refrigerant charging port is connected to the piping inside the unit. The unit's internal piping is already factory charged with refrigerant, so be careful when connecting the charge hose.
- After adding the refrigerant, do not forget to close the lid of the refrigerant charging port. The tightening torque for the lid is 11.5 to 13.9 N•m.
- In order to ensure uniform refrigerant distribution, it may take the compressor ±10 minutes to start up after the unit has started operation. This is not a malfunction.

A. Adding refrigerant by using the automatic charging function

INFORMATION

The automatic refrigerant charging has limits as described below. Out of these limits, the system cannot operate the automatic refrigerant charging:

- Outdoor temperature: 0°C DB~43°C DB.
- Indoor temperature: 10°C DB~32°C DB.
- Total indoor unit capacity: ≥80%.

6A The remaining additional refrigerant charge can be charged by operating the outdoor unit by means of the automatic refrigerant charge operation mode.
Depending on the ambient limitation conditions (see above), the unit will automatically decide which operation mode will be used to fulfill the automatic refrigerant charge: cooling or heating. If above conditions are fulfilled, cooling operation will be selected. If not, heating.

Procedure

- Idle (default) screen is shown.
- Push BS2 once, indication "888".
- Push BS2 for more than 5 seconds, wait while the unit is preparing for operation. Segment display indication: "t01" (pressure control is executed):
  - In case heating operation is started: indication "t22" till "t23" will be displayed (start up control; waiting stable heating operation).
  - In case cooling operation is started: indication "t02" till "t03" will be displayed (start up control; waiting stable cooling operation).
- When "t23" or "t03" starts flashing (ready for charging), push BS2 within 5 minutes. Open valve A. If BS2 is not pushed within 5 minutes, a malfunction code will appear:
  - heating operation: "t26" will be flashing. Push BS2 to restart the procedure.
  - cooling operation: malfunction code "P2" will appear. Push BS1 to abort and restart the procedure.

Heating (middle segment indicates "2")
Charging will continue, the segment indication intermittently shows the current low pressure value and the status indication "t23".
When the remaining additional refrigerant amount is charged, close valve A immediately and push BS3 to stop charging operation.
After BS3 is pushed, the ending code "t26" will appear. When BS2 is pushed, the unit will check whether the ambient conditions are favourable to execute the test run.

- if "t01", "t02", or "t03" appears, push BS1 to finish the automatic charging function procedure. The ambient conditions are favourable to execute the test run.
- if the unit indicates "E-2", or "E-3", the ambient conditions are NOT favourable to execute the test run. Push BS1 to finish the automatic charging procedure.

INFORMATION

In case a malfunction code occurred during this automatic charging procedure, the unit will stop and indicate "t26" flashing. Push BS2 to restart the procedure.

Cooling (middle segment indicates "0")
Automatic charging will continue, the segment indication shows the current low pressure value and the status indication "t03" intermittent.
If the segment indication/user interface of indoor unit shows "PE" code, charging is almost finished. When the unit stops operating, close valve A immediately and check whether the segment indication/user interface of indoor unit shows "P9". This indicates the automatic charging in cooling program was finished successfully.

INFORMATION

When the charging amount is little, the "PE" code may not be displayed, but instead the "P9" code will be displayed immediately.

When the required (calculated) additional refrigerant amount is already charged before "PE" or "P9" indication appears, close valve A and wait till "P9" is displayed.

If during the cooling operation for the automatic refrigerant charge the ambient conditions go beyond the allowable for this operation mode, the unit will indicate on the segment display the de "E-2" in case indoor temperature is out of range or "E-3" in case the outdoor temperature is out of range. In this case, when the additional refrigerant charging was not finished, step 6A. has to be repeated.

INFORMATION

- When a malfunction is detected during the procedure (e.g, in case of closed stop valve), a malfunction code will be displayed. In that case, refer to "15.5. Malfunction code list" on page 44 and solve the malfunction accordingly. Resetting the malfunction can be done by pushing BS1. The procedure can be restarted from 6A).
- Aborting the automatic refrigerant charge is possible by pushing BS1. The unit will stop and return to idle condition.

Perform the test procedure as described in "15.4. Test operation" on page 43.

B. Adding refrigerant by using the manual charging function

6B The remaining additional refrigerant charge can be charged by operating the outdoor unit by means of the manual refrigerant charge operation mode:

- Turn on the power of the indoor units and outdoor unit.
- Take all the precautions mentioned in "start-up and configuration" into account.
- Activate outdoor unit setting [2-20]=1 to start manual refrigerant charge mode. Refer to page 38 for details.
  Result: The unit will start operation. Valve A can be opened. Charging of remaining additional refrigerant can be done. When the remaining calculated additional refrigerant amount is added, close valve A and push BS3 to stop the manual refrigerant charging procedure.

INFORMATION

The manual refrigerant charge operation will automatically stop within 30 minutes. If charging is not completed after 30 minutes, perform the additional refrigerant charging operation again.

Perform the test procedure as described in "15.4. Test operation" on page 43.

INFORMATION

- When a malfunction is detected during the procedure (e.g., in case of closed stop valve), a malfunction code will be displayed. In that case, refer to "15.5. Malfunction code list" on page 44 and solve the malfunction accordingly. Resetting the malfunction can be done by pushing BS3. The procedure can be restarted from 6B).
- Aborting the manual refrigerant charge is possible by pushing BS3. The unit will stop and return to idle condition.

Information which may occur during additional refrigerant charging procedures:

P8: Indoor unit freeze up prevention
Action: Close valve A immediately. Reset malfunction by pushing BS1. Retry auto charge procedure.

P2: Abnormal low pressure drop
Action: Close valve A immediately. Reset malfunction by pushing BS1. Check following items before retry auto charge procedure:

- Check if the gas side stop valve is opened correctly.
- Check if the valve of the refrigerant cylinder is opened.
- Check if the air inlet and outlet of the indoor units are not obstructed.

E-2: Indoor temperature is out of range.

E-3: Outdoor temperature is out of range.

Other malfunction code: close valve A immediately. Confirm the malfunction code and take corresponding action, "15.5. Malfunction code list" on page 44.

14.4.3. Checks after adding refrigerant

- Are the stop valves for liquid and gas open?
- Is the amount of refrigerant, that has been added, recorded on the refrigerant charge label?

NOTICE

Make sure to open all stop valves after (pre-) charging the refrigerant.

Operating with the stop valves closed will damage the compressor.

15. Start-up and configuration

INFORMATION

It is important that all information in this chapter is read sequentially by the installer and that the system is configured as applicable.

DANGER: Electrical shock

See "2. General safety precautions" on page 2.

15.1. Checks before initial start up

After the installation of the unit, first check the following items. Once all below checks are fulfilled, the unit must be closed, only then can the unit be powered up.

1 Installation
Check that the unit is properly installed, to avoid abnormal noises and vibrations when starting up the unit.

2 Field wiring
Be sure that the field wiring has been carried out according to the instructions described in the chapter "12. Electrical wiring work" on page 21, according to the wiring diagrams and according to the applicable legislation.

3 Power supply voltage
Check the power supply voltage on the local supply panel. The voltage must correspond to the voltage on the identification label of the unit.

4 Earth wiring
Be sure that the earth wires have been connected properly and that the earth terminals are tightened.

5 Insulation test of the main power circuit
Using a megatester for 500 V, check that the insulation resistance of 2 MΩ or more is attained by applying a voltage of 500 V DC between power terminals and earth. Never use the megatester for the transmission wiring.

6 Fuses, circuit breakers, or protection devices
Check that the fuses, circuit breakers, or the locally installed protection devices are of the size and type specified in the chapter "12. Electrical wiring work" on page 21. Be sure that neither a fuse nor a protection device has been bypassed.

7 Internal wiring
Visually check the electrical component box and the inside of the unit on loose connections or damaged electrical components.

8 Pipe size and pipe insulation
Be sure that correct pipe sizes are installed and that the insulation work is properly executed.

9 Stop valves
Be sure that the stop valves are open on both liquid and gas side.

10 Damaged equipment
Check the inside of the unit on damaged components or squeezed pipes.

11 Refrigerant leak
Check the inside of the unit on refrigerant leakage. If there is a refrigerant leak, try to repair the leak. If the repair is unsuccessful, call your local dealer. Do not touch any refrigerant which has leaked out from refrigerant piping connections. This may result in frostbite.

12 Oil leak
Check the compressor for oil leakage. If there is an oil leak, try to repair the leak. If the repairing is unsuccessful, call your local dealer.

13 Air inlet/outlet
Check that the air inlet and outlet of the unit is not obstructed by paper sheets, cardboard, or any other material.

14 Additional refrigerant charge
The amount of refrigerant to be added to the unit shall be written on the included "Added refrigerant" plate and attached to the rear side of the front cover.

15 Installation date and field setting
Be sure to keep record of the installation date on the sticker on the rear of the upper front panel according to EN60335-2-40 and keep record of the contents of the field setting(s).

15.2. Monitoring function and field settings

The operation of the outdoor unit can further be defined by changing some field settings. Next to making field settings it is also possible to confirm the current operation parameters of the unit.

Below relevant Monitoring mode (mode 1) and Field setting mode (mode 2) settings are explained in detail. How to access them, how to change the value of the settings and how to confirm them is explained in "13. Making field settings" on page 28. In that chapter, an example is given on how to make a setting. It is advised to check this procedure before accessing, checking and changing below settings.

Once the default situation of the segment indication is confirmed (see "13. Making field settings" on page 28), the mode 1 and mode 2 can be accessed.

Making settings is done via the master outdoor unit.

15.2.1. Mode 1

Mode 1 can be used to monitor the current situation of the outdoor unit. Some field setting contents can be monitored as well.

Below the settings in mode 1 are explained.

[1-0]= shows whether the unit you check is a master, slave 1 or slave 2 unit

- No indication=undefined situation
- 0=outdoor unit is master unit
- 1=outdoor unit is slave 1 unit
- 2=outdoor unit is slave 2 unit

Master, slave 1 and slave 2 indications are relevant in multiple outdoor unit system configurations. The allocation of which outdoor unit is master, slave 1 or slave 2 are decided by the unit's logic.
The master unit should be used to input field settings in mode 2.

[1-1]= shows the status of low noise operation

- 1=unit is currently operating under low noise restrictions
- 0=unit is currently not operating under low noise restrictions

Low noise operation reduces the sound generated by the unit compared to nominal operating conditions.

Low noise operation can be set in mode 2. There are two methods to activate low noise operation of the outdoor unit system.

The first method is to enable an automatic low noise operation during night time by field setting. The unit will operate at the selected low noise level during the selected time frames.

The second method is to enable low noise operation based on an external input. For this operation an optional accessory is required.

[1-2]= shows the status of power consumption limitation operation

- 1=unit is currently operating under power consumption limitation
- 0=unit is currently not operating under power consumption limitation

Power consumption limitation reduces the power consumption of the unit compared to nominal operating conditions.

Power consumption limitation can be set in mode 2. There are two methods to activate power consumption limitation of the outdoor unit system.

The first method is to enable a forced power consumption limitation by field setting. The unit will always operate at the selected power consumption limitation.

The second method is to enable power consumption limitation based on an external input. For this operation an optional accessory is required.

[1-5]= shows the current T_e target parameter position

Refer to "15.3. Energy saving and optimum operation" on page 40 for more details about the contents of this value

[1-6]= shows the current T_c target parameter position

Refer to "15.3. Energy saving and optimum operation" on page 40 for more details about the contents of this value

[1-10]= shows the total number of connected indoor units

It can be convenient to check if the total number of indoor units which are installed match the total number of indoor units which are recognized by the system. In case there is a mismatch, it is advised to check the communication wiring path between outdoor and indoor units (F1/F2 communication line).

[1-13]= shows the total number of connected outdoor units (in case of multiple outdoor system).

It can be convenient to check if the total number of outdoor units which are installed matches the total number of outdoor units which are recognized by the system. In case there is a mismatch, it is advised to check the communication wiring path between outdoor and outdoor units (Q1/Q2 communication line).

[1-17]= shows the latest malfunction code.

[1-18]= shows the 2nd last malfunction code.

[1-19]= shows the 3rd last malfunction code.

When the latest malfunction codes were reset by accident on an indoor unit user interface, they can be checked again through this monitoring settings. For the content or reason behind the malfunction code see "15.5. Malfunction code list" on page 44, where most relevant malfunction codes are explained. Detailed information about malfunction codes can be consulted in the service manual of this unit.

[1-40]= shows the current cooling comfort setting. See "15.3. Energy saving and optimum operation" on page 40 for more details about this setting.

[1-41]= shows the current heating comfort setting. See "15.3. Energy saving and optimum operation" on page 40 for more details about this setting.

15.2.2. Mode 2

Mode 2 is used to change the field settings of the system. Consulting the current field setting value and changing the current field setting value is possible.

In general, normal operation can be resumed without special intervention after changing field settings.

Some field settings are used for special operation (e.g., 1 time operation, recovery/vacuuming setting, manual adding refrigerant setting, etc.). In such a case, it is required to abort the special operation before normal operation can restart. It will be indicated in below explanations.

[2-0]= Cool/Heat selection setting

Cool/Heat selection setting is used in case the optional Cool/Heat selector (KRC19-26A and BRP2A81) is used. Depending on the outdoor unit setup (single outdoor unit setup or multi outdoor unit setup), the correct setting should be chosen. More details on how to use the Cool/Heat selector option can be found in the manual of the Cool/Heat selector.

Default value=0.

- 0=Each individual outdoor unit can select Cool/Heat operation (by Cool/Heat selector if installed), or by defining master indoor user interface (see "6.4. Setting the master user interface" on page 55).
- 1=Master unit decides Cool/Heat operation when outdoor units are connected in multiple system combination[(a)]
- 2=Slave unit for Cool/Heat operation when outdoor units are connected in multiple system combination[(a)]

Change [2-0]=0, 1 or 2 in function of required functionality.

[2-8]= T_e target temperature during cooling operation

Default value=0

Value [2-8]	T_e target
0	Auto (default)
2	6
3	7
4	8
5	9
6	10
7	11

Change [2-8]=0, 2~7 in function of required operation method during cooling.

For more information and advice about the impact of these settings, see "15.3. Energy saving and optimum operation" on page 40.

[2-9]= T_c target temperature during heating operation

Default value=0

Value [2-9]	T_c target
0	Auto (default)
1	41
3	43
6	46

Change [2-9]=0, 1, 3 or 6 in function of required operation method during heating.

For more information and advice about the impact of these settings, see "15.3. Energy saving and optimum operation" on page 40.

[2-12]= Enable the low noise function and/or power consumption limitation via external control adaptor (DTA104A61/62)

If the system needs to be running under low noise operation or under power consumption limitation conditions when an external signal is sent to the unit, this setting should be changed. This setting will only be effective when the optional external control adaptor (DTA104A61/62) is installed.

Default value=0.

To activate this function change [2-12]=1.

[2-18]= Fan high static pressure setting

In order to increase the static pressure the outdoor unit fan is delivering, this setting should be activated. For details about this setting, see technical specifications.

Default value=0.

To activate this function change [2-18]=1.

[2-20]= Manual additional refrigerant charge

In order to add the additional refrigerant charge amount in a manual way (without automatic refrigerant charging functionality), following setting should be applied. Further instructions regarding the different ways to charge additional refrigerant into your system can be found in chapter "14.4. Method for adding refrigerant" on page 32.

Default value=0.

To activate this function change [2-20]=1.

To stop the manual additional refrigerant charge operation (when the required additional refrigerant amount is charged), push BS3. If this function was not aborted by pushing BS3, the unit will stop its operation after 30 minutes. If 30 minutes was not sufficient to add the needed refrigerant amount, the function can be reactivated by changing the field setting again.

[2-21]= Refrigerant recovery/vacuuming mode

In order to achieve a free pathway to reclaim refrigerant out of the system or to remove residual substances or to vacuum the system it is necessary to apply a setting which will open required valves in the refrigerant circuit so the reclaim of refrigerant or vacuuming process can be done properly.

Default value=0.

To activate function change [2-21]=1.

To stop the refrigerant recovery/vacuuming mode, push BS3. If BS3 is not pushed, the system will remain in refrigerant recovery/vacuuming mode.

[2-22]= Automatic low noise setting and level during night time

By changing this setting, you activate the automatic low noise operation function of the unit and define the level of operation. Depending on the chosen level, the noise level will be lowered (3: Level 3<2: Level2<1: Level1). The start and stop moments for this function are defined under setting [2-26] and [2-27].

Default value=0.

To activate function change [2-22]=1, 2 or 3.

[2-25]= Low noise operation level via the external control adaptor

If the system needs to be running under low noise operation conditions when an external signal is sent to the unit, this setting defines the level of low noise that will be applied (3: Level 3<2: Level 2<1: Level 1).

This setting will only be effective when the optional external control adaptor (DTA104A61/62) is installed and the setting [2-12] was activated.

Default value=2.

To activate function change [2-25]=1, 2 or 3.

[2-26]= Low noise operation start time

Change [2-26]=1, 2 or 3 in function of required timing.

Default value=2.

Value [2-26]	Start time automatic low noise operation (approximately)
1	20h00
2	22h00 (default)
3	24h00

This setting is used in conjunction with setting [2-22].

[2-27]= Low noise operation stop time

Default value=3.

Value [2-27]	Stop time automatic low noise operation (approximately)
1	6h00
2	7h00
3	8h00 (default)

This setting is used in conjunction with setting [2-22].

[2-30]= Power consumption limitation level (step 1) via the external control adaptor (DTA104A61/62).

If the system needs to be running under power consumption limitation conditions when an external signal is sent to the unit, this setting defines the level power consumption limitation that will be applied for step1. The level is according to the table.

Default value=3.

Change [2-30]=1, 2, 3, 4, 5, 6, 7 or 8 in function of required limitation.

Value [2-30]	Power consumption limitation (approximately)
1	60%
2	65%
3	70% (default)
4	75%
5	80%
6	85%
7	90%
8	95%

[2-31]= Power consumption limitation level (step 2) via the external control adaptor (DTA104A61/62).

If the system needs to be running under power consumption limitation conditions when an external signal is sent to the unit, this setting defines the level power consumption limitation that will be applied for step2. The level is according to the table.

Default value=1.

Change [2-31]=1, 2 or 3 in function of required limitation.

Value [2-31]	Power consumption limitation (approximately)
1	40% (default)
2	50%
3	55%

[2-32]= Forced, all time, power consumption limitation operation (no external control adaptor is required to perform power consumption limitation).

If the system always needs to be running under power consumption limitation conditions, this setting activates and defines the level power consumption limitation that will be applied continuously. The level is according to the table.

Default value=0 (OFF).

Value [2-32]	Restriction reference
0	Function not active (default)
1	Follows [2-30] setting
2	Follows [2-31] setting

Change [2-32]=0, 1 or 2 in function of required limitation.

[2-73]= When the system is using non-R410A VRV DX indoor units, the system needs to get the proper input according to the table below.

Default value=0

Value [2-73]	Indoor unit type which can be used
0	R410A VRV DX indoor units
1	non-R410A VRV DX units

Remark:

- A combination of R410A and non-R410A VRV DX indoor units cannot be used.
- The list of compatible non-R410A indoor units is restricted to the models mentioned in "3.2.1. Indoor unit combinations" on page 3.

[2-81]= Cooling comfort setting.

Default value=1

Value [2-81]	Cooling comfort setting
0	Eco
1	Mild (default)
2	Quick
3	Powerful

Change [2-81]=0, 1, 2 or 3 in function of required limitation.

This setting is used in conjunction with setting [2-8].

For more information and advice about the impact of these settings, see "15.3. Energy saving and optimum operation" on page 40.

[2-82]= Heating comfort setting.

Default value=1

Value [2-82]	Heating comfort setting
0	Eco
1	Mild (default)
2	Quick
3	Powerful

Change [2-82]=0, 1, 2 or 3 in function of required limitation.

This setting is used in conjunction with setting [2-9].

For more information and advice about the impact of these settings, see "15.3. Energy saving and optimum operation" on page 40.

(a) It is necessary to use the optional external control adaptor for outdoor unit (DTA104A61/62). See the instruction delivered with the adaptor for further details.

15.3. Energy saving and optimum operation

This VRV IV replacement heat pump system is equipped with advanced energy saving functionality. Depending on the priority, emphasises can be put on energy saving or comfort level. Several parameters can be selected, resulting in the optimal balance between energy consumption and comfort for the particular application.

Several patterns are available and explained below. Modify the parameters to the needs of your building and to realize the best balance between energy consumption and comfort.

15.3.1. Three main operation methods are available:

- **Basic**
  The refrigerant temperature is fixed independent from the situation. It corresponds to the standard operation which is known and can be expected from/under previous VRV systems:
  - To activate this operation method under cooling operation: change field setting [2-8]=2.
  - To activate this operation method under heating operation: change field setting [2-9]=6.
- **Automatic**
  The refrigerant temperature is set depending on the outdoor ambient conditions. As such adjusting the refrigerant temperature to match the required load (which is also related to the outdoor ambient conditions).
  E.g., when your system is operating in cooling, you do not need as much cooling under low outdoor ambient temperatures (e.g., 25°C) as under high outdoor ambient temperatures (e.g., 35°C). Using this idea, the system automatically starts increasing its refrigerant temperature, automatically reducing the delivered capacity and increasing the system's efficiency.
  - To activate this operation method under cooling operation: change field setting [2-8]=0 (default).

  E.g., when your system is operating in heating, you do not need as much heating under high outdoor ambient temperatures (e.g., 15°C) as under low outdoor ambient temperatures (e.g., –5°C). Using this idea, the system automatically starts decreasing its refrigerant temperature, automatically reducing the delivered capacity and increasing the system's efficiency.
  - To activate this operation method under heating operation: change field setting [2-9]=0 (default).
- **Hi-sensible/economic (cooling/heating)**
  The refrigerant temperature is set higher/lower (cooling/heating) compared to basic operation. The focus under high sensible mode is comfort feeling for the customer.
  The selection method of indoor units is important and has to be considered as the available capacity is not the same as under basic operation. For details concerning to Hi-sensible applications, please contact your dealer.
  - To activate this setting under cooling operation: change field setting [2-8] to the appropriate value, matching the requirements of the pre-designed system containing a high sensible solution.

Value [2-8]	T_e target
3	7
4	8
5	9
6	10
7	11

  - To activate this setting under heating operation: change field setting [2-9] to the appropriate value, matching the requirements of the pre-designed system containing a high sensible solution.

Value [2-9]	T_e target
1	41
3	43

15.3.2. Several comfort settings are available

For each of above modes a comfort level can be selected. The comfort level is related to the timing and the effort (energy consumption) which is put in achieving a certain room temperature by temporarily changing the refrigerant temperature to different values in order to achieve requested conditions more quickly.

- **Powerful**
  Overshoot (during heating operation) or undershoot (during cooling operation) is allowed compared to the requested refrigerant temperature, in order to achieve the required room temperature very fast. The overshoot is allowed from the start up moment.
  In case of cooling operation the evaporating temperature is allowed to go down to 3°C on temporary base depending on the situation.
  In case of heating operation the condense temperature is allowed to go up to 49°C on temporary base depending on the situation.
  When the request from the indoor units becomes more moderate, the system will eventually go to the steady state condition which is defined by the operation method above.
  - To activate the powerful comfort setting under cooling operation, change field setting [2-81]=3.
    This setting is used in conjunction with setting [2-8].
  - To activate the powerful comfort setting under heating operation, change field setting [2-82]=3.
    This setting is used in conjunction with setting [2-9].

- **Quick**

  Overshoot (during heating operation) or undershoot (during cooling operation) is allowed compared to the requested refrigerant temperature, in order to achieve the required room temperature very fast. The overshoot is allowed from the start up moment.

  In case of cooling operation the evaporating temperature is allowed to go down to 6°C on temporary base depending on the situation.

  In case of heating operation the condense temperature is allowed to go up to 46°C on temporary base depending on the situation.

  When the request from the indoor units becomes more moderate, the system will eventually go to the steady state condition which is defined by the operation method above.

  - To activate the quick comfort setting under cooling operation, change field setting [2-81]=2.

    This setting is used in conjunction with setting [2-8].
  - To activate the quick comfort setting under heating operation, change field setting [2-82]=2.

    This setting is used in conjunction with setting [2-9].

- **Mild**

  Overshoot (during heating operation) or undershoot (during cooling operation) is allowed compared to the requested refrigerant temperature, in order to achieve the required room temperature very fast. The overshoot is not allowed from the start up moment. The start up occurs under the condition which is defined by the operation mode above.

  In case of cooling operation the evaporating temperature is allowed to go down to 6°C on temporary base depending on the situation.

  In case of heating operation the condense temperature is allowed to go up to 46°C on temporary base depending on the situation.

  When the request from the indoor units becomes more moderate, the system will eventually go to the steady state condition which is defined by the operation method above.

  The start up condition is different from the powerful and quick comfort setting.

  - To activate the mild comfort setting under cooling operation, change field setting [2-81]=1.

    This setting is used in conjunction with setting [2-8].
  - To activate the mild comfort setting under heating operation, change field setting [2-82]=1.

    This setting is used in conjunction with setting [2-9].

- **Eco**

  The original refrigerant temperature target, which is defined by the operation method (see above) is kept without any correction, unless for protection control.

  - To activate the mild comfort setting under cooling operation, change field setting [2-81]=0.

    This setting is used in conjunction with setting [2-8].
  - To activate the mild comfort setting under heating operation, change field setting [2-82]=0.

    This setting is used in conjunction with setting [2-9].

Example: Automatic mode during cooling

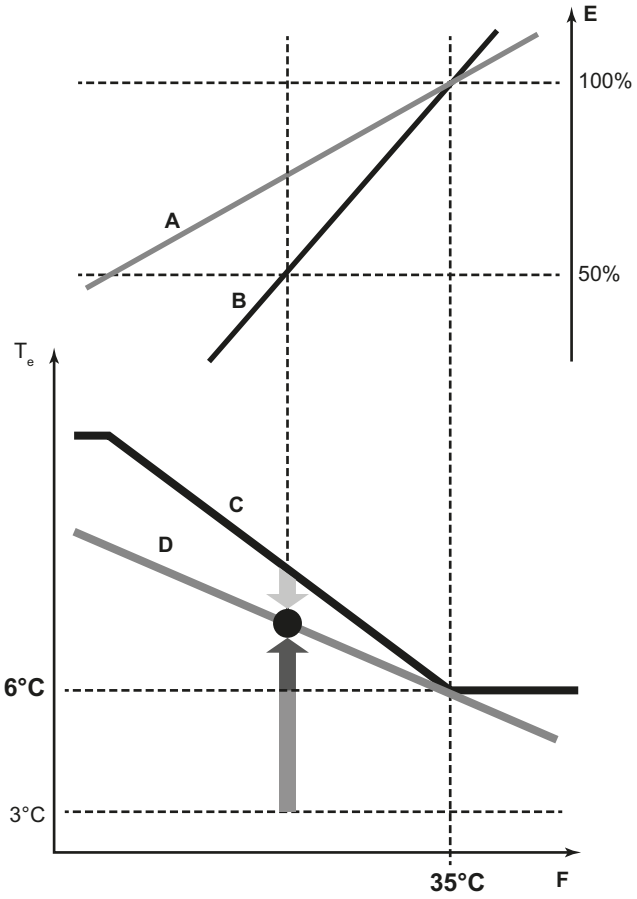

- **A** Actual load curve
- **B** Virtual load curve (initial capacity automatic mode)
- **C** Virtual target value (initial evaporation temperature value automatic mode)
- **D** Required evaporation temperature value
- **E** Load factor
- **F** Outside air temperature
- T_e Evaporating temperature
- Quick
- Powerful
- Mild

Room temperature evolution:

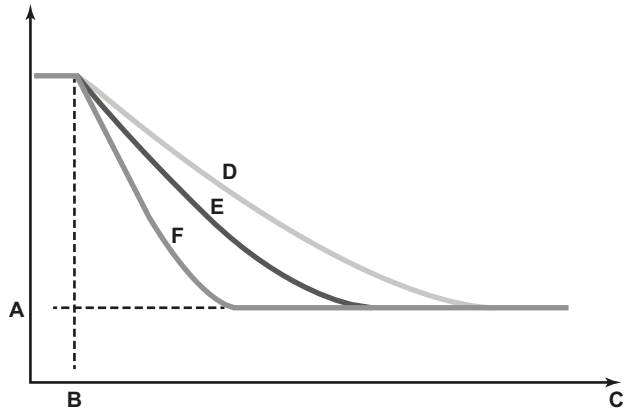

- **A** Indoor unit set temperature
- **B** Operation start
- **C** Operating time
- **D** Mild
- **E** Quick
- **F** Powerful

Example: Automatic mode during heating

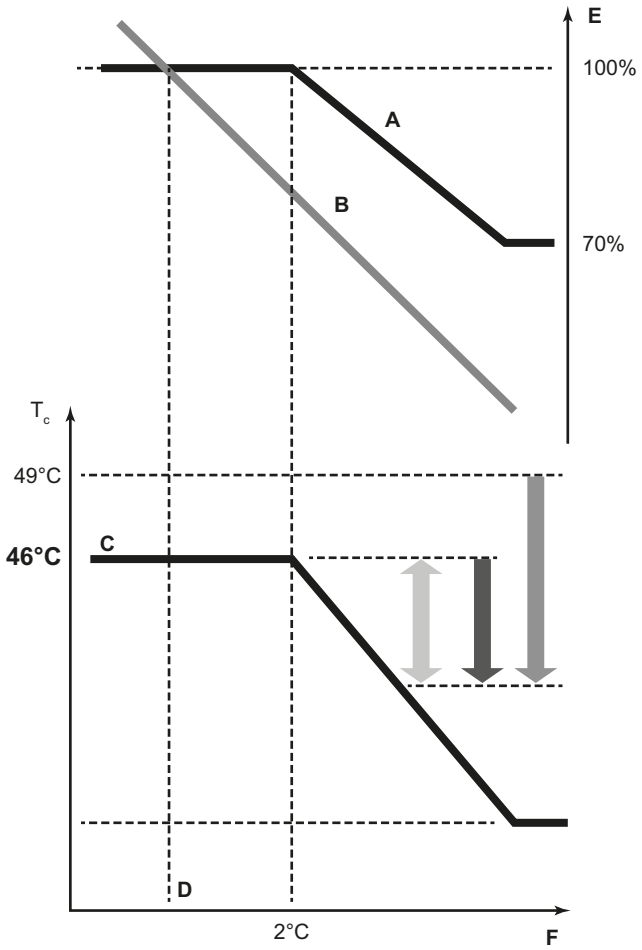

- **A** Virtual load curve (default automatic mode peak capacity)
- **B** Load curve
- **C** Virtual target value (initial condensation temperature value automatic mode)
- **D** Design temperature
- **E** Load factor
- **F** Outside air temperature
- T_c Condensing temperature
- Quick
- Powerful
- Mild

Room temperature evolution:

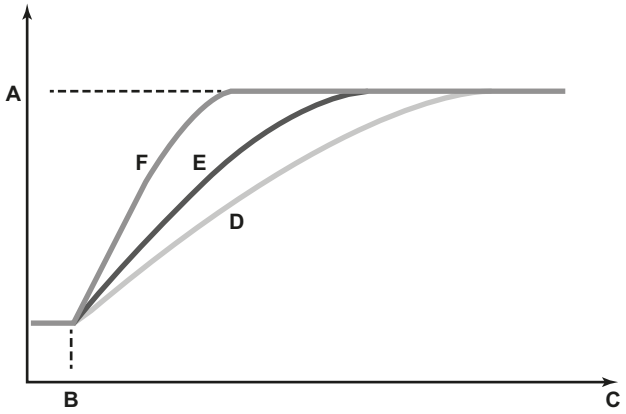

- **A** Indoor unit set temperature
- **B** Operation start
- **C** Operating time
- **D** Mild
- **E** Quick
- **F** Powerful

No matter which control is selected, variations on the behaviour of the system are still possible due to protection controls to keep the unit operating under reliable conditions. The intentional target, however, is fixed and will be used to obtain the best balance between energy consumption and comfort, depending on the application type.

15.4. Test operation

After installation and once the field settings are defined, the installer is obliged to verify correct operation. Therefore a test run must be performed according to the procedures described below.

15.4.1. Precautions before starting test operation

During test operation, the outdoor unit and the indoor units will start up:

- Make sure that the preparations of all indoor units are finished (field piping, electrical wiring, air purge, ...). See installation manual of the indoor units for details.

CAUTION

Do not insert fingers, rods or other objects into the air inlet or outlet. When the fan is rotating at high speed, it will cause injury.

CAUTION

Do not perform the test operation while working on the indoor units.

When performing the test operation, not only the outdoor unit, but the connected indoor unit will operate as well. Working on an indoor unit while performing a test operation is dangerous.

CAUTION

- During tests never pressurize the appliances with a pressure higher than the maximum allowable pressure (as indicated on the nameplate of the unit).
- If refrigerant gas leaks, ventilate the area immediately. Toxic gas may be produced if refrigerant gas comes into contact with fire.
- Never directly touch any accidental leaking refrigerant. This could result in severe wounds caused by frostbite.
- Test run is possible for ambient temperatures between –20°C and 35°C.

DANGER: Do not touch piping and internal parts.

See "2. General safety precautions" on page 2.

DANGER: Electrical shock

See "2. General safety precautions" on page 2.

- Provide a logbook and machine card.
  In accordance with the applicable legislation, it may be necessary to provide a logbook with the equipment containing at least: info on maintenance, repair work, results of tests, stand-by periods, …

INFORMATION

Note that during the first running period of the unit, required power input may be higher. This phenomenon originates from the compressor that requires a 50 hour run elapse before reaching smooth operation and stable power consumption. Reason is that the scroll is made out of iron and that it takes some time to smooth the surfaces that make contact.

NOTICE

To protect the compressor, be sure to turn on the power supply 6 hours before starting operation.

15.4.2. Test operation

The procedure below describes the test operation of the complete system. This operation checks and judges following items:

- Check of wrong wiring (communication check with indoor units).
- Check of the stop valves opening.
- Judgement of piping length.

On top of this system test operation, indoor units operation should also be checked separately.

- Make sure to carry out the system test operation after the first installation. Otherwise, the malfunction code U3 will be displayed on the user interface and normal operation or individual indoor unit test run cannot be carried out.
- Abnormalities on indoor units cannot be checked for each unit separately. After the test operation is finished, check the indoor units one by one by performing a normal operation using the user interface. Refer to the indoor unit installation manual for more details concerning the individual test run.

INFORMATION

- It may take 10 minutes to achieve a uniform refrigerant state before the compressor starts.
- During the test operation, the refrigerant running sound or the magnetic sound of a solenoid valve may become loud and the display indication may change. These are not malfunctions.

Procedure

1. Close all front panels in order to not let it be the cause of misjudgement (except the electrical component box inspection opening service cover).
2. Make sure all field settings you want are set; see "15.2. Monitoring function and field settings" on page 37.
3. Turn ON the power to the outdoor unit and the connected indoor units.

NOTICE

Be sure to turn on the power 6 hours before operation in order to have power running to the crankcase heater and to protect the compressor.

4. Make sure the default (idle) situation is existing; see "13.2. Operating the push buttons and DIP switches on the logic board" on page 29. Push BS2 for 5 seconds or more. The unit will start test operation.
   - The test operation is automatically carried out, the outdoor unit display will indicate "T01" and the indication "Test operation" and "Under centralized control" will display on the user interface of indoor units.
     Steps during the automatic system test run procedure:
     - "T01": control before start up (pressure equalization)
     - "T02": cooling start up control
     - "T03": cooling stable condition
     - "T04": communication check
     - "T05": stop valve check
     - "T06": pipe length check
     - "T07": refrigerant amount check
     - "T09": pump down operation
     - "T10": unit stop
   - During the test operation, it is not possible to stop the unit operation from a user interface. To abort the operation, press BS3. The unit will stop after ±30 seconds.

5 Check the test operation results on the outdoor unit segment display.
- Normal completion: no indication on the segment display (idle)
- Abnormal completion: indication of malfunction code on the segment display
  Refer to "15.4.3. Correcting after abnormal completion of the test operation" on page 44 to take actions for correcting the abnormality. When the test operation is fully completed, normal operation will be possible after 5 minutes.

15.4.3. Correcting after abnormal completion of the test operation

The test operation is only completed if there is no malfunction code displayed on the user interface or outdoor unit segment display. In case of a displayed malfunction code, perform correcting actions as explained in the malfunction code table. Carry out the test operation again and confirm that the abnormality is properly corrected.

INFORMATION

Refer to the installation manual of the indoor unit for other detailed malfunction codes related to indoor units.

15.5. Malfunction code list

In case of a displayed malfunction code, perform correcting actions as explained in the malfunction code table.

After correcting the abnormality, press BS3 to reset the malfunction code and retry operation.

The malfunction code which is displayed on the outdoor unit will indicate a main malfunction code and a sub code. The sub code indicates more detailed information about the malfunction code. The malfunction code will be displayed intermittent.

Example:

Main code	Sub code
E3-	001

With an interval of 1 second, the display will switch between main code and sub code.

Below table gives an overview of the malfunction codes which may appear.

Malfunction code			
Main code	Sub code Master/slave 1/slave 2	Contents	Solution
E3	01/03/05	High pressure switch was activated (S1PH, S2PH, S3PH, S4PH) - A1P (X3A; X4A; X2A)	Check stop valve situation or abnormalities in (field) piping or airflow over air cooled coil.
	02/04/06	• Refrigerant overcharge • Stop valve closed	• Check refrigerant amount+recharge unit • Open stop valves
	13/14/15	Stop valve closed (liquid)	Open liquid stop valve
	18	• Refrigerant overcharge • Stop valve closed	• Check refrigerant amount+recharge unit • Open stop valves
E4	01/02/03	Low pressure malfunction: • Stop valve closed • Refrigerant shortage • Indoor unit malfunction	• Open stop valves • Check refrigerant amount+recharge unit • Check the user interface's display or • Transmission wiring between the outdoor unit and the indoor unit
E9	01/05/08	Electronic expansion valve malfunction (subcool) (Y2E) - A1P (X21A)	Check connection on PCB or actuator
	04/07/10	Electronic expansion valve malfunction (main) (Y1E) - A1P (X23A)	Check connection on PCB or actuator
F3	01/03/05	Discharge temperature too high (R21T/R22T): • Stop valve closed • Refrigerant shortage	• Open stop valves • Check refrigerant amount+recharge unit
	20/21/22	Compressor casing temperature too high (R8T): • Stop valve closed • Refrigerant shortage	• Open stop valves • Check refrigerant amount+recharge unit
F6	02	• Refrigerant overcharge • Stop valve closed	• Check refrigerant amount+recharge unit • Open stop valves
H9	01/02/03	Ambient temperature sensor malfunction (R1T) - A1P (X18A)	Check connection on PCB or actuator
J3	16/22/28	Discharge temperature sensor malfunction (R21T): open circuit - A1P (X29A)	Check connection on PCB or actuator
	17/23/29	Discharge temperature sensor malfunction (R21T): short circuit - A1P (X29A)	Check connection on PCB or actuator
	18/24/30	Discharge temperature sensor malfunction (R22T): open circuit - A1P (X29A)	Check connection on PCB or actuator
	19/25/31	Discharge temperature sensor malfunction (R22T): short circuit - A1P (X29A)	Check connection on PCB or actuator
	47/49/51	Compressor casing temperature sensor malfunction (R8T): open circuit - A1P (X29A)	Check connection on PCB or actuator
	48/50/52	Compressor casing temperature sensor malfunction (R8T): short circuit - A1P (X29A)	Check connection on PCB or actuator
J5	01/03/05	Suction temperature sensor malfunction (R3T) - A1P (X30A)	Check connection on PCB or actuator
J6	01/02/03	De-icing temperature sensor malfunction (R7T) - A1P (X30A)	Check connection on PCB or actuator
J7	06/07/08	Liquid temperature sensor (after subcool HE) malfunction (R5T) - A1P (X30A)	Check connection on PCB or actuator
J8	01/02/03	Liquid temperature sensor (coil) malfunction (R4T) - A1P (X30A)	Check connection on PCB or actuator
J9	01/02/03	Gas temperature sensor (after subcool HE) malfunction (R6T) - A1P (X30A)	Check connection on PCB or actuator

Malfunction code			
Main code	Sub code Master/slave 1/slave 2	Contents	Solution
JA	06/08/10	High pressure sensor malfunction (S1NPH): open circuit - A1P (X32A)	Check connection on PCB or actuator
	07/09/11	High pressure sensor malfunction (S1NPH): short circuit - A1P (X32A)	Check connection on PCB or actuator
JC	06/08/10	Low pressure sensor malfunction (S1NPL): open circuit - A1P (X31A)	Check connection on PCB or actuator
	07/09/11	Low pressure sensor malfunction (S1NPL): short circuit - A1P (X31A)	Check connection on PCB or actuator
LC	14	Transmission outdoor unit - inverter: INV1 transmission trouble - A1P (X20A, X28A, X40A)	Check connection
	19	Transmission outdoor unit - inverter: FAN1 transmission trouble - A1P (X20A, X28A, X40A)	Check connection
	24	Transmission outdoor unit - inverter: FAN2 transmission trouble - A1P (X20A, X28A, X40A)	Check connection
	30	Transmission outdoor unit - inverter: INV2 transmission trouble - A1P (X20A, X28A, X40A)	Check connection
P1	01/02/03	INV1 unbalanced power supply voltage	Check if power supply is within range
	07/08/09	INV2 unbalanced power supply voltage	Check if power supply is within range
U1	01/05/07	Reversed power supply phase malfunction	Correct phase order
	04/06/08	Reversed power supply phase malfunction	Correct phase order
U2	01/08/11	INV1 voltage power shortage	Check if power supply is within range
	02/09/12	INV1 power phase loss	Check if power supply is within range
	22/25/28	INV2 voltage power shortage	Check if power supply is within range
	23/26/29	INV2 power phase loss	Check if power supply is within range
U3	03	Malfunction code: System test run not yet executed (system operation not possible)	Execute system test run
U4	01	Faulty wiring to Q1/Q2 or indoor - outdoor	Check (Q1/Q2) wiring
	03	Faulty wiring to Q1/Q2 or indoor - outdoor	Check (Q1/Q2) wiring
	04	System test run abnormal ending	Execute test run again
U7	01	Warning: faulty wiring to Q1/Q2	Check Q1/Q2 wiring
	02	Malfunction code: faulty wiring to Q1/Q2	Check Q1/Q2 wiring
	11	• Too many indoor units are connected to F1/F2 line • Bad wiring between outdoor and indoor units	Check indoor unit amount and total capacity connected
U9	01	System mismatch. Wrong type of indoor units combined (R410A, R407C). Indoor unit malfunction.	Check if other indoor units have malfunction and confirm indoor unit mix is allowed.
UA	18	Connection malfunction over indoor units or type mismatch (R410A, R407C).	Check if other indoor units have malfunction and confirm indoor unit mix is allowed.
	31	Wrong unit combination (multi system)	Check if unit types are compatible
	49	Wrong unit combination (multi system)	Check if unit types are compatible
UH	01	Auto address malfunction (inconsistency)	Check if transmission wired unit amount matches with powered unit amount (by monitor mode) or wait till initialisation is finished.
UF	01	Auto address malfunction (inconsistency)	Check if transmission wired unit amount matches with powered unit amount (by monitor mode) or wait till initialisation is finished.
	05	Stop valve closed or wrong (during system test run)	Open stop valves

INFORMATION

References can be found on the wiring diagram.

Information code			
Main code		Contents	Solution
Auto charging related			
P2		Unusual low pressure on suction line	Close valve A immediately. Push BS3 to reset. Check following items before retrying autocharge procedure: • Check if the gas side stop valve is opened correctly. • Check if the valve of the refrigerant cylinder is opened. • Check if the air inlet and outlet of the indoor unit are not obstructed.
P8		Freeze-up prevention indoor unit	Close valve A immediately. Push BS3 to reset. Retry autocharge procedure.
PE		Automatic charging nearly finished	Prepare for autocharge stopping
P9		Automatic charging finished	Finish autocharge mode

16. Operation of the unit

Once the unit is installed and test operation of outdoor unit and indoor units is finished, the operation of the system can start.

For operating the indoor unit, the user interface of the indoor unit should be switched ON. Refer to the indoor unit operation manual for more details.

17. Maintenance and service

17.1. Maintenance introduction

In order to ensure optimal operation of the unit, a number of checks and inspections should be carried out on the unit at regular intervals, preferably yearly.

This maintenance shall be carried out by the installer or service agent.

17.2. Service precautions

DANGER: Electrical shock

See "2. General safety precautions" on page 2.

CAUTION

When performing service to inverter equipment:

1. Do not open the electrical component box cover for 10 minutes after the power supply is turned off.
2. Measure the voltage between terminals on the terminal block for power supply with a tester and confirm that the power supply is shut off.
   In addition, measure points as shown in the figure below, with a tester and confirm that the voltage of the capacitor in the main circuit is less than 50 V DC.

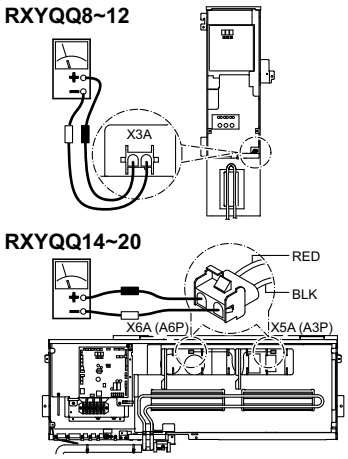

3. To prevent damaging the PC-board, touch a non-coated metal part to eliminate static electricity before pulling out or plugging in connectors.
4. Pull out junction connectors X1A, X2A (X3A, X4A) for the fan motors in the outdoor unit before starting service operation on the inverter equipment. Be careful not to touch the live parts.
   (If a fan rotates due to strong wind, it may store electricity in the capacitor or in the main circuit and cause electric shock.)
5. After the service is finished, plug the junction connector back in. Otherwise the malfunction code E7 will be displayed on the user interface or on the outdoor unit segment display and normal operation will not be performed.

For details refer to the wiring diagram labelled on the back of the electrical component box cover.

Pay attention to the fan. It is dangerous to inspect the unit while the fan is running. Make sure to turn off the main switch and to remove the fuses from the control circuit located in the outdoor unit.

NOTICE

Play it safe. For protection of the PCB, touch the switch box casing by hand in order to eliminate static electricity from your body before performing service.

17.3. Service mode operation

Refrigerant recovery operation/vacuuming operation is possible by applying setting [2-21]. Refer to "13.2. Operating the push buttons and DIP switches on the logic board" on page 29 for details how to set mode 2.

When vacuuming/recovery mode is used, check very carefully what should be vacuumed/recovered before starting. See installation manual of the indoor unit for more information about vacuuming and recovery.

17.3.1. Vacuuming method

1 When the unit is at standstill, set the unit in [2-21]=1.

2 When confirmed, the indoor and outdoor unit expansion valves will fully open.
At that moment the segment display indication=T.01 and the user interface of all indoor units indicate TEST (test operation) and (external control) and the operation will be prohibited.

3 Evacuate the system with a vacuum pump.

4 Press BS3 to stop vacuuming mode.

17.3.2. Refrigerant recovery operation method

This should be done by a refrigerant reclaimer. Follow the same procedure as for vacuuming method.

18. Caution for refrigerant leaks

18.1. Introduction

The installer and system specialist shall secure safety against leakage according to local regulations or standards. The following standards may be applicable if local regulations are not available.

This system uses R410A as refrigerant. R410A itself is an entirely safe non-toxic, non-combustible refrigerant. Nevertheless care must be taken to ensure that air conditioning facilities are installed in a room which is sufficiently large. This assures that the maximum concentration level of refrigerant gas is not exceeded, in the unlikely event of major leak in the system and this in accordance to the local applicable regulations and standards.

18.2. Maximum concentration level

The maximum charge of refrigerant and the calculation of the maximum concentration of refrigerant is directly related to the humanly occupied space in to which it could leak.

The unit of measurement of the concentration is kg/m^3 (the weight in kg of the refrigerant gas in 1 m^3 volume of the occupied space).

Compliance to the local applicable regulations and standards for the maximum allowable concentration level is required.

According to the appropriate European Standard, the maximum allowed concentration level of refrigerant to a humanly space for R410A is limited to 0.44 kg/m^3.

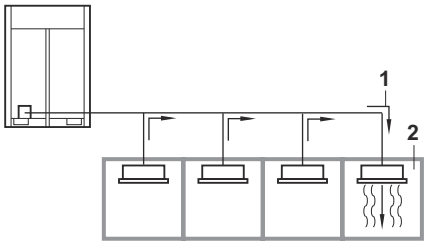

1 Direction of the refrigerant flow
2 Room where refrigerant leak has occurred (outflow of all the refrigerant from the system)

Pay special attention to places, such as basements etc., where refrigerant can stay, since refrigerant is heavier than air.

18.3. Procedure for checking maximum concentration

Check the maximum concentration level in accordance with steps 1 to 4 below and take whatever action is necessary to comply.

1 Calculate the amount of refrigerant (kg) charged to each system separately.

Amount of refrigerant in a single unit system (amount of refrigerant with which the system is charged before leaving the factory) + Additional charging amount (amount of refrigerant added locally in accordance with the length or diameter of the refrigerant piping) = Total amount of refrigerant (kg) in the system

NOTICE

Where a single refrigerant facility is divided into 2 entirely independent refrigerant systems, use the amount of refrigerant with which each separate system is charged.

2 Calculate the volume of the room (m^3) where the indoor unit is installed.
In a case such as the following, calculate the volume of (A), (B) as a single room or as the smallest room.

A Where there are no smaller room divisions:

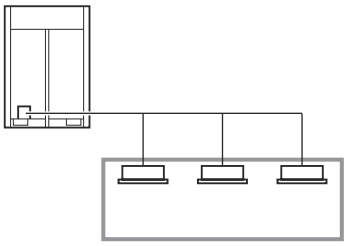

B Where there is a room division, but there is an opening between the rooms sufficiently large to permit a free flow of air back and forth.

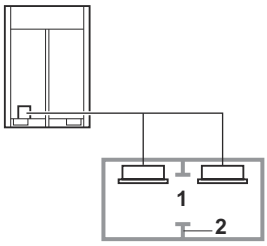

1 Opening between the rooms
2 Partition
(Where there is an opening without a door or where there are openings above and below the door which are each equivalent in size to 0.15% or more of the floor area.)

3 Calculating the refrigerant density using the results of the calculations in steps 1 and 2 above.

$$\frac{\text{Total volume of refrigerant in the refrigerant system}}{\text{Size (m}^3\text{) of smallest room in which there is an indoor unit installed}} \leq \text{Maximum concentration level (kg/m}^3\text{)}$$

If the result of the above calculation exceeds the maximum concentration level, a ventilation opening to the adjacent room shall be made.

4 Calculate the refrigerant density taking the volume of the room where the indoor unit is installed and the adjacent room.
Install ventilation openings in the door of adjacent rooms until the refrigerant density is smaller than the maximum concentration level.

19. Disposal requirements

Dismantling of the unit, treatment of the refrigerant, of oil and of other parts must be done in accordance with relevant local and national legislation.

20. Unit specifications

INFORMATION

For technical and electrical details of multi unit combinations, see technical engineering data.

20.1. General technical specifications

		RXYQQ8	RXYQQ10	RXYQQ12	RXYQQ14
Casing material		Painted galvanised steel			
Dimensions h x w x d	(mm)	1685x930x765			1685x1240 x765
Weight		187	194		305
Operation range					
• cooling (min./max.)	(°C)	–5/43			
• heating (min./max.)	(°C)	–20/21			
Cooling[a]					
• capacity	(kW)	22.4	28.0	33.5	40.0
• EER		4.30	3.84	3.73	3.64
Heating[b]					
• capacity	(kW)	25.0	31.5	37.5	45.0
• COP		4.54	4.27	4.12	4.02
PED					
• category		2			
• Most critical part		Accumulator			
• PS*V	(bar*l)	325			415
Maximum number of indoor units connected[c]		64			
Heat exchanger					
• type		cross fin			
• treatment		anti corrosion			
Fan					
• type		propeller			
• quantity		1			2
• air flow rate[d]	(m^3/min)	162	175	185	223
• motor		1			2
• model		brushless DC			
• output/pcs	(W)	750			
Compressor					
• quantity		1			2
• model		inverter			
• type		hermetically sealed scroll compressor			
• crankcase heater	(W)	33			
Sound level (nominal)[e]					
• sound power[f]	(dBA)	78	79	81	
• sound pressure[g]	(dBA)	58		61	
Refrigerant					
• type		R410A			
• charge (factory)	(kg)	5.9	6	6.3	10.3
Refrigerant oil		Synthetic (ether) oil			
Safety devices		• High pressure switch • Fan driver overload protector • Inverter overload protector • PC board fuse			

(a) Nominal cooling capacities are based on indoor temperature 27°C DB and 19°C WB, outdoor temperature 35°C DB, equivalent refrigerant piping: 5 m, level difference: 0 m.
(b) Nominal cooling capacities are based on indoor temperature 20°C DB, outdoor temperature 7°C DB and 6°C WB, equivalent refrigerant piping: 5 m, level difference: 0 m.
(c) Actual number of units depends on the connection ratio restriction for the system (50%≤CR≤130%).
(d) Nominal at 230 V.
(e) Sound values are measured in a semi-anechoic room.
(f) Sound power level is an absolute value that a sound generates.
(g) Sound pressure level is a relative value depending on the distance and acoustic environment. For more details, refer to sound level drawings in the technical data book.

		RXYQQ16	RXYQQ18	RXYQQ20
Casing material		Painted galvanised steel		
Dimensions h x w x d	(mm)	1685x1240x765		
Weight		305	314	
Operation range				
• cooling (min./max.)	(°C)	–5/43		
• heating (min./max.)	(°C)	–20/21		
Cooling[a]				
• capacity	(kW)	45.0	50.0	56.0
• EER		3.46	3.40	3.03
Heating[b]				
• capacity	(kW)	50.0	56.0	63.0
• COP		3.91	3.89	3.71
PED				
• category		2		
• Most critical part		Accumulator		
• PS*V	(bar*l)	415	492.5	
Maximum number of indoor units connected[c]		64		
Heat exchanger				
• type		cross fin		
• treatment		anti corrosion		
Fan				
• type		propeller		
• quantity		2		
• air flow rate[d]	(m^3/min)	260	251	261
• motor		2		
• model		brushless DC		
• output/pcs	(W)	750		
Compressor				
• quantity		2		
• model		inverter		
• type		hermetically sealed scroll compressor		
• crankcase heater	(W)	33		
Sound level (nominal)[e]				
• sound power[f]	(dBA)	86		88
• sound pressure[g]	(dBA)	64	65	66
Refrigerant				
• type		R410A		
• charge (factory)		10.4	11.7	11.8
Refrigerant oil		Synthetic (ether) oil		
Safety devices		• High pressure switch • Fan driver overload protector • Inverter overload protector • PC board fuse		

20.2. Electrical specifications

		RXYQQ8	RXYQQ10	RXYQQ12	RXYQQ14
Power supply					
• name		Y1			
• phase		3N~			
• frequency	(Hz)	50			
• Voltage	(V)	380-415			
Current					
• nominal running current (RLA)[a]	(A)	7.2	10.2	12.7	15.4
• starting current (MSC)[b]	(A)	≤MCA			
• minimum circuit amps (MCA)[c]	(A)	16.1	22.0	24.0	27.0
• Maximum fuse amps (MFA)[d]	(A)	20	25	32	
• Total overcurrent amps (TOCA)[e]	(A)	17.3	24.6		35.4
• Full load amps (FLA)[f]	(A)	1.2	1.3	1.5	1.8
Voltage range	(V)	380-415 ±10%			
Wiring connections					
• for power supply		5G			
• for connection to indoor unit		2 (F1/F2)			
Power supply intake		both indoor and outdoor unit			

(a) RLA is based on indoor unit temperature 27°C DB and 19°C WB, outdoor temperature 35°C DB.
(b) MSC=the maximum current during startup of the compressor. VRV IV uses only inverter compressors. MCA must be used to select the correct field wiring size. The MCA can be regarded as the maximum running current.
(c) MCA must be used to select the correct field wiring size. The MCA can be regarded as the maximum running current.
(d) MFA is used to select the circuit breaker and the ground fault circuit interrupter (earth leakage circuit breaker).
(e) TOCA means the total value of each OC set.
(f) FLA=nominal running current fan
Voltage range: units are suitable for use on electrical systems where voltage supplied to unit terminal is not below or above listed range limits.
Maximum allowable voltage range variation between phases is 2%.

		RXYQQ16	RXYQQ18	RXYQQ20
Power supply				
• name		Y1		
• phase		3N~		
• frequency	(Hz)	50		
• Voltage	(V)	380-415		
Current				
• nominal running current (RLA)[a]	(A)	18.0	20.8	26.9
• starting current (MSC)[b]	(A)	≤MCA		
• minimum circuit amps (MCA)[c]	(A)	31.0	35.0	39.0
• Maximum fuse amps (MFA)[d]	(A)	40		50
• Total overcurrent amps (TOCA)[e]	(A)	35.7	42.7	
• Full load amps (FLA)[f]	(A)	2.6		
Voltage range	(V)	380-415 ±10%		
Wiring connections				
• for power supply		5G		
• for connection to indoor unit		2 (F1/F2)		
Power supply intake		both indoor and outdoor unit		

Operation manual

Contents

Page

1. Definitions 50
   1.1. Meaning of warnings and symbols 50
   1.2. Meaning of used terms 50
2. Introduction 51
   2.1. General information 51
   2.2. System layout 53
3. Before operation 53
4. User interface 53
5. Operation range 53
6. Operation procedure 53
   6.1. Cooling, heating, fan only, and automatic operation 53
   6.2. Program dry operation 54
   6.3. Adjusting the air flow direction 54
   6.4. Setting the master user interface 55
   6.5. Precautions for group control system or two user interface control system 55
7. Energy saving and optimum operation 55
8. Maintenance 56
   8.1. Maintenance after a long stop period (e.g., at the beginning of the season) 56
   8.2. Maintenance before a long stop period (e.g., at the end of the season) 56
9. Symptoms that are not air conditioner troubles 56
10. Troubleshooting 58
11. After-sales service and warranty 58
   11.1. Warranty period 58
   11.2. After-sales service 58
   11.3. Shortening of "maintenance cycle" and "replacement cycle" needs to be considered in following situations 59
   11.4. Malfunction codes 59

Thank you for purchasing this Daikin VRV IV replacement system.

The original instructions are written in English. All other languages are translations of the original instructions.

CAREFULLY READ THESE INSTRUCTIONS BEFORE OPERATING THE UNIT. THEY WILL TELL YOU HOW TO USE THE UNIT PROPERLY. KEEP THIS MANUAL IN A HANDY PLACE FOR FUTURE REFERENCE.

This appliance is not intended for use by persons, including children, with reduced physical, sensory or mental capabilities, or lack of experience and knowledge, unless they have been given supervision or instruction concerning use of the appliance by a person responsible for their safety. Children shall be supervised to ensure that they do not play with the appliance.

WARNING

- This unit contains electrical and hot parts.
- Before operating the unit, be sure the installation has been carried out correctly by an installer. If you feel unsure about operation, contact your installer for advice and information.

1. Definitions

1.1. Meaning of warnings and symbols

Warnings in this manual are classified according to their severity and probability of occurrence.

DANGER

Indicates an imminently hazardous situation which, if not avoided, will result in death or serious injury.

WARNING

Indicates a potentially hazardous situation which, if not avoided, could result in death or serious injury.

CAUTION

Indicates a potentially hazardous situation which, if not avoided, may result in minor or moderate injury. It may also be used to alert against unsafe practices.

NOTICE

Indicates situations that may result in equipment or property-damage accidents only.

INFORMATION

This symbol identifies useful tips or additional information.

Some types of danger are represented by special symbols:

Electric current.

Danger of burning and scalding.

1.2. Meaning of used terms

Installation manual:

Instruction manual specified for a certain product or application, explaining how to install, configure and maintain it.

Operation manual:

Instruction manual specified for a certain product or application, explaining how to operate it.

Maintenance instructions:

Instruction manual specified for a certain product or application, which explains (if relevant) how to install, configure, operate and/or maintain the product or application.

Dealer:

Sales distributor for products as per the subject of this manual.

Installer:

Technical skilled person who is qualified to install products as per the subject of this manual.

User:

Person who is owner of the product and/or operates the product.

Service company:

Qualified company which can perform or coordinate the required service to the unit.

Applicable legislation:

All international, European, national and local directives, laws, regulations and/or codes which are relevant and applicable for a certain product or domain.

Accessories:

Equipment which is delivered with the unit and which needs to be installed according to instructions in the documentation.

Optional equipment:

Equipment which can optionally be combined to the products as per the subject of this manual.

Field supply:

Equipment which needs to be installed according to instructions in this manual, but which are not supplied by Daikin.

2. Introduction

2.1. General information

The indoor unit part of VRV IV replacement heat pump system can be used for heating/cooling applications. The type of indoor unit which can be used depends on the outdoor units series.

NOTICE

For future modifications or expansions of your system:

A full overview of allowable combinations (for future system extensions) is available in technical engineering data and should be consulted. Contact your installer to receive more information and professional advice.

In general following type of indoor units can be connected to a VRV IV replacement heat pump system (not exhaustive list, depending on outdoor unit model and indoor unit model combinations):

- VRV direct expansion (DX) indoor units for R410A.
- AHU (air to air applications): EKEXV-kit+EKEQ-box are required, depending on application.
- VRV direct expansion (DX) indoor units for non-R410A.
  See "3.2.1. Indoor unit combinations" on page 3.

Airhandling unit connection in pair to VRV IV replacement heat pump outdoor unit is supported.

Airhandling unit connection in multi to VRV IV replacement heat pump outdoor unit is supported, even combined with VRV direct expansion indoor unit(s).

For more specifications, see technical engineering data.

WARNING

- If you detect any abnormality such as smell of fire, turn off the power supply and call your dealer for instructions.
- Do not place objects in direct proximity of the outdoor unit and do not let leaves and other debris accumulate around the unit. Leaves are a hotbed for small animals which can enter the unit. Once in the unit, such animals can cause malfunctions, smoke or fire when making contact with electrical parts.
- Ask your dealer for improvement, repair, and maintenance. Incomplete improvement, repair, and maintenance may result in a water leakage, electric shock and fire.
- Do not insert fingers, rods or other objects into the air inlet or outlet. When the fan is rotating at high speed, it will cause injury.
- Never let the indoor unit or the user interface get wet. It may cause an electric shock or a fire.
- Never use a flammable spray such as hair spray, lacquer or paint near the unit. It may cause a fire.
- Never touch the air outlet or the horizontal blades while the swing flap is in operation. Fingers may become caught or the unit may break down.
- Never replace a fuse with a fuse of a wrong ampere ratings or other wires when a fuse blows out. Use of wire or copper wire may cause the unit to break down or cause a fire.
- To prevent refrigerant leak, contact your dealer. When the system is installed and runs in a small room, it is required to keep the concentration of the refrigerant, if by any chance coming out, below the limit. Otherwise, oxygen in the room may be affected, resulting in a serious accident.
- The refrigerant in the air conditioner is safe and normally does not leak. If the refrigerant leaks in the room, contact with a fire of a burner, a heater or a cooker may result in a harmful gas.
  Turn off any combustible heating devices, ventilate the room and contact the dealer where you purchased the unit.
  Do not use the air conditioner until a service person confirms that the portion where the refrigerant leaks is repaired.
- Improper installation or attachment of equipment or accessories could result in electric shock, short circuit, leaks, fire or other damage to the equipment.
- Be sure to use only accessories and spare parts made by Daikin which are specifically designed for use with the equipment and have them installed by a professional.
- Ask your dealer to move and reinstall the air conditioner. Incomplete installation may result in a water leakage, electric shock, and fire.
- Do not place a flammable spray bottle near the air conditioner and do not use sprays. Doing so may result in a fire.
- Before cleaning, be sure to stop the operation, turn the breaker off or pull out the supply cord. Otherwise, an electric shock and injury may result.
- Do not operate the air conditioner with wet hands. An electric shock may result.
- Do not place appliances which produce open fire in places exposed to the air flow from the unit or under the indoor unit. It may cause incomplete combustion or deformation of the unit due to the heat.
- Do not wash the air conditioner with water. Electric shock or fire may result.

WARNING

- Do not install the air conditioner at any place where flammable gas may leak out. If the gas leaks out and stays around the air conditioner, a fire may break out.
- In order to avoid electric shock or fire, make sure that an earth leak detector is installed.
- Be sure the air conditioner is electrically earthed. In order to avoid electric shock, make sure that the unit is grounded and that the earth wire is not connected to gas or water pipe, lightning conductor or telephone earth wire.
- Do not place a flower vase or anything containing water on the unit. Water may enter the unit, causing an electric shock or fire.
- Avoid placing the controller in a spot which can be splashed with water. Water entering the machine may cause an electric leak or may damage the internal electronic parts.

CAUTION

- It is not good for your health to expose your body to the air flow for a long time.
- In order to avoid injury, do not remove the fan guard of the outdoor unit.
- To avoid oxygen deficiency, ventilate the room sufficiently if equipment with burner is used together with the air conditioner.
- Do not allow anyone to climb on the outdoor unit or avoid placing any object on it. Falling or tumbling may result in injury.
- Never expose little children, plants or animals directly to the air flow.
- Do not let children play on and around the outdoor unit. If they touch the unit carelessly, it may result in injury.
- Never touch the internal parts of the controller.
  Do not remove the front panel. Some parts inside are dangerous to touch and appliance problems may happen. For checking and adjusting the internal parts, contact your dealer.
- Do not touch the heat exchanger fins. These fins are sharp and could result in cutting injuries.

NOTICE

- Never put any objects into the air inlet or outlet. Objects touching the fan at high operating speed can be dangerous.
- Never press the button of the user interface with a hard, pointed object. The user interface may be damaged.
- Never pull or twist the electric wire of the user interface. It may cause the unit to malfunction.
- Never inspect or service the unit by yourself. Ask a qualified service person to perform this work.
- Do not use the air conditioner for other purposes. In order to avoid any quality deterioration, do not use the unit for cooling precision instruments, food, plants, animals or works of art.
- After a long use, check the unit stand and fitting for damage. If damaged, the unit may fall and result in injury.
- Do not place items which might be damaged by moisture under the indoor unit. Condensation may form if the humidity is above 80%, if the drain outlet is blocked or the filter is polluted.
- Arrange the drain hose to ensure smooth drainage. Incomplete drainage may cause wetting of the building, furniture etc.
- Do not place the controller exposed to direct sunlight. The LCD display may get discoloured, failing to display the data.
- Do not wipe the controller operation panel with benzine, thinner, chemical dust cloth, etc. The panel may get discoloured or the coating peeled off. If it is heavily dirty, soak a cloth in water-diluted neutral detergent, squeeze it well and wipe the panel clean. Wipe it with another dry cloth.
- Do not operate the air conditioner when using a room fumigation-type insecticide. This could cause the chemicals to become deposited in the unit, which could endanger the health of those who are hypersensitive to chemicals.

2.2. System layout

Your VRV IV replacement heat pump series outdoor unit can be as follows:

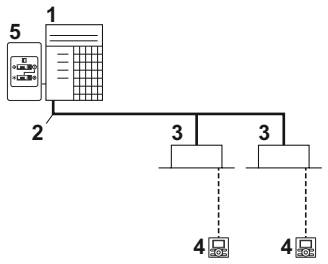

1 VRV IV replacement heat pump outdoor unit
2 Refrigerant piping
3 VRV direct expansion (DX) indoor unit
4 User interface (dedicated depending on indoor unit type)
5 Cool/Heat changeover remote control switch

3. Before operation

This operation manual is for the following systems with standard control. Before initiating operation, contact your dealer for the operation that corresponds to your system type and mark. If your installation has a customized control system, ask your dealer for the operation that corresponds to your system.

Operation modes (depending on indoor unit type):

- Heating and cooling (air to air).
- Fan only operation (air to air).

Dedicated functions exist depending on the type of indoor unit, refer to dedicated installation/operation manual for more information.

4. User interface

This operation manual will give a non-exhaustive overview of the main functions of the system.

Detailed information on required actions to achieve certain functions can be found in the dedicated installation and operation manual of the indoor unit.

Refer to the operation manual of the installed user interface.

5. Operation range

Use the system in the following temperature and humidity ranges for safe and effective operation.

	❄	☀
Outdoor temperature	–5~43°C DB	–20~21°C DB –20~15.5°C WB
Indoor temperature	21~32°C DB 14~25°C WB	15~27°C DB
Indoor humidity	≤80%[(a)]	

(a) To avoid condensation and water dripping out of the unit.
If the temperature or the humidity is beyond these conditions, safety devices may be put in action and the air conditioner may not operate.

Above operation range is only valid in case direct expansion indoor units are connected to the VRV IV system.

6. Operation procedure

- Operation procedure varies according to the combination of outdoor unit and user interface.
- To protect the unit, turn on the main power switch 6 hours before operation.
- If the main power supply is turned off during operation, operation will restart automatically after the power turns back on again.

6.1. Cooling, heating, fan only, and automatic operation

- Changeover cannot be made with a user interface whose display shows "change-over under centralized control" (refer to installation and operation manual of the user interface).
- When the display "change-over under centralized control" flashes, refer to "6.4. Setting the master user interface" on page 55.
- The fan may keep on running for about 1 minute after the heating operation stops.
- The air flow rate may adjust itself depending on the room temperature or the fan may stop immediately. This is not a malfunction.

6.1.1. For systems without cool/heat changeover remote control switch

1 Press the operation mode selector button on the user interface several times and select the operation mode of your choice.
❄ Cooling operation
☀ Heating operation
Fan only operation

2 Press the ON/OFF button on the user interface.
The operation lamp lights up and the system starts operating.

6.1.2. For systems with cool/heat changeover remote control switch

Overview of the changeover remote control switch

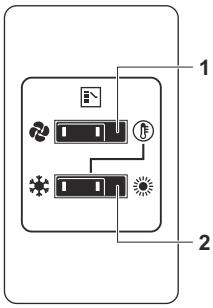

1 FAN ONLY/AIR CONDITIONING SELECTOR SWITCH
Set the switch to for fan only operation or to for heating or cooling operation.
2 COOL/HEAT CHANGEOVER SWITCH
Set the switch to ❄ for cooling or to ☀ for heating.

Operating the changeover remote control switch

1 Select operation mode with the cool/heat changeover switch as follows:

Cooling operation ❄ | Heating operation ☀ | Fan only operation

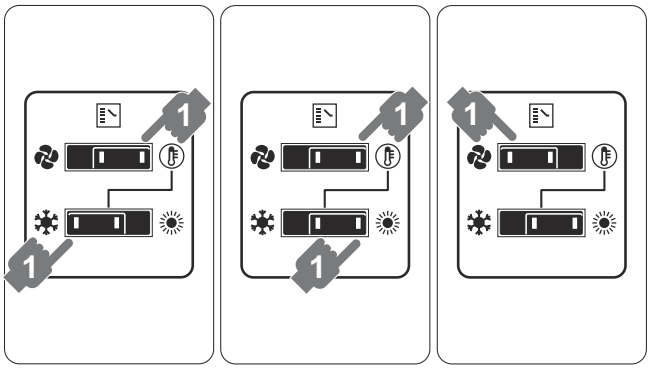

2 Press the ON/OFF button on the user interface.
The operation lamp lights up and the system starts operating.

Adjustment

For programming temperature, fan speed and air flow direction refer to the operation manual of the user interface.

Stopping the system

3 Press the ON/OFF button on the user interface once again. The operation lamp goes out and the system stops operating.

NOTICE

Do not turn off power immediately after the unit stops, but wait for at least 5 minutes.

6.1.3. Explanation of heating operation

It may take longer to reach the set temperature for general heating operation than for cooling operation.

The following operation is performed in order to prevent the heating capacity from dropping or cold air from blowing.

Defrost operation

- In heating operation, freezing of the outdoor unit's air cooled coil increases over time, restricting the energy transfer to the outdoor unit's coil. Heating capability decreases and the system needs to go into defrost operation to be able to deliver enough heat to the indoor units: the indoor unit will stop fan operation, the refrigerant cycle will reverse and energy from inside the building will be used to defrost the outdoor unit coil.
- The indoor unit will indicate defrost operation on the displays .

Hot start

- In order to prevent cold air from blowing out of an indoor unit at the start of heating operation, the indoor fan is automatically stopped. The display of the user interface shows . It may take some time before the fan starts. This is not a malfunction.

INFORMATION

- The heating capacity drops when the outside temperature falls. If this happens, use another heating device together with the unit. (When using together with appliances that produce open fire, ventilate the room constantly).
  Do not place appliances that produce open fire in places exposed to the air flow from the unit or under the unit.
- It takes some time to heat up the room from the time the unit is started since the unit uses a hot-air circulating system to heat the entire room.
- If the hot air rises to the ceiling, leaving the area above the floor cold, we recommend that you use the circulator (the indoor fan for circulating air). Contact your dealer for details.

6.2. Program dry operation

- The function of this program is to decrease the humidity in your room with minimal temperature decrease (minimal room cooling).
- The micro computer automatically determines temperature and fan speed (cannot be set by the user interface).
- The system does not go into operation if the room temperature is low (<20°C).

6.2.1. For systems without cool/heat changeover remote control switch

Starting the system

1 Press the operation mode selector button on the user interface several times and select (program dry operation).

2 Press the ON/OFF button of the user interface. The operation lamp lights up and the system starts operating.

3 Press the air flow direction adjust button (only for Double-flow, Multi-flow, Corner, Ceiling-suspended and Wall-mounted). Refer to "6.3. Adjusting the air flow direction" on page 54 for details.

Stopping the system

4 Press the ON/OFF button of the user interface once again. The operation lamp goes out and the system stops operating.

NOTICE

Do not turn off power immediately after the unit stops, but wait for at least 5 minutes.

6.2.2. For systems with cool/heat changeover remote control switch

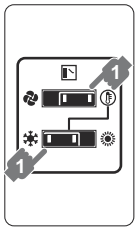

Starting the system

1 Select cooling operation mode with the cool/heat changeover remote control switch.

2 Press the operation mode selector button on the user interface several times and select (program dry operation).

3 Press the ON/OFF button of the user interface. The operation lamp lights up and the system starts operating.

4 Press the air flow direction adjust button (only for Double-flow, Multi-flow, Corner, Ceiling-suspended and Wall-mounted). Refer to "6.3. Adjusting the air flow direction" on page 54 for details.

Stopping the system

5 Press the ON/OFF button of the user interface once again. The operation lamp goes out and the system stops operating.

NOTICE

Do not turn off power immediately after the unit stops, but wait for at least 5 minutes.

6.3. Adjusting the air flow direction

Refer to the operation manual of the user interface.

6.3.1. Movement of the air flow flap

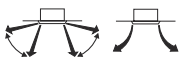

Double flow+multi-flow units

Corner units

Ceiling suspended units

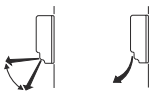

Wall-mounted units

For the following conditions, a micro computer controls the air flow direction which may be different from the display.

COOLING	HEATING
• When the room temperature is lower than the set temperature.	• When starting operation. • When the room temperature is higher than the set temperature. • At defrost operation.
• When operating continuously at horizontal air flow direction. • When continuous operation with downward air flow is performed at the time of cooling with a ceiling-suspended or a wall-mounted unit, the micro computer may control the flow direction, and then the user interface indication will also change.	

The air flow direction can be adjusted in one of the following ways:

- The air flow flap itself adjusts its position.
- The air flow direction can be fixed by the user.
- Automatic and desired position .

NOTICE

- The movable limit of the flap is changeable. Contact your dealer for details. (only for double-flow, multiflow, corner, ceiling-suspended and wall-mounted).
- Avoid operating in the horizontal direction . It may cause dew or dust to settle on the ceiling or flap.

6.4. Setting the master user interface

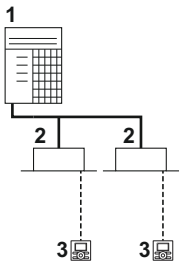

1 VRV heat pump outdoor unit
2 VRV direct expansion (DX) indoor unit
3 User interface (dedicated depending on indoor unit type)

When the system is installed as shown in the figure above, it is necessary to designate one of the user interfaces as the master user interface.

The displays of slave user interfaces show (change-over under centralized control) and slave user interfaces automatically follow the operation mode directed by the master user interface.

Only the master user interface can select heating or cooling mode.

6.4.1. How to designate the master user interface

1 Press the operation mode selector button of the current master user interface for 4 seconds. In case this procedure was not yet performed, the procedure can be executed on the first user interface operated.
The display showing (change-over under centralized control) of all slave user interfaces connected to the same outdoor unit flashes.

2 Press the operation mode selector button of the controller that you wish to designate as the master user interface. Then designation is completed. This user interface is designated as the master user interface and the display showing (change-over under centralized control) vanishes. The displays of other user interfaces show (change-over under centralized control).

6.5. Precautions for group control system or two user interface control system

This system provides two other control systems beside individual control system (one user interface controls one indoor unit). Confirm the following if your unit is of the following control system type:

- **Group control system**
  One user interface controls up to 16 indoor units. All indoor units are equally set.
- **Two user interface control system**
  Two user interfaces control one indoor unit (in case of group control system, one group of indoor units). The unit is individually operated.

NOTICE

Contact your dealer in case of changing the combination or setting of group control and two user interface control systems.

7. Energy saving and optimum operation

Observe the following precautions to ensure the system operates properly.

- Adjust the air outlet properly and avoid direct air flow to room inhabitants.
- Adjust the room temperature properly for a comfortable environment. Avoid excessive heating or cooling.
- Prevent direct sunlight from entering a room during cooling operation by using curtains or blinds.
- Ventilate often.
  Extended use requires special attention to ventilation.
- Keep doors and windows closed. If the doors and windows remain open, air will flow out of your room causing a decrease in the cooling or heating effect.
- Be careful not to cool or heat too much. To save energy, keep the temperature setting at a moderate level.
- Never place objects near the air inlet or the air outlet of the unit. It may cause deterioration in the effect or stop the operation.
- Turn off the main power supply switch to the unit when the unit is not used for longer periods of time. If the switch is on, it consumes electricity.
  Before restarting the unit, turn on the main power supply switch 6 hours before operation to ensure smooth running. (Refer to "Maintenance" in the indoor unit manual.)
- When the display shows (time to clean the air filter), ask a qualified service person to clean the filters. (Refer to "Maintenance" in the indoor unit manual.)
- Keep the indoor unit and user interface at least 1 m away from televisions, radios, stereos, and other similar equipment. Failing to do so may cause static or distorted pictures.
- Do not place items under the indoor unit, they may be damaged by water.
- Condensation may form if the humidity is above 80% or if the drain outlet gets blocked.

Your system is equipped with advanced energy saving functionality. Depending on the priority emphasises can be put on energy saving or comfort level. Several parameters can be selected, resulting in the optimal balance between energy consumption and comfort for your particular application.

Several patterns are available and roughly explained below. Contact your installer or dealer for advice or to modify the parameters to the needs of your building.

Detailed information is given for the installer in the installation manual. He can help you to realize the best balance between energy consumption and comfort.

Three main operation methods are available:

- **Basic**

The refrigerant temperature is fixed independent from the situation. It corresponds to the standard operation which is known and can be expected from/under previous VRV systems.

- **Automatic**

The refrigerant temperature is set depending on the outdoor ambient conditions. As such adjusting the refrigerant temperature to match the required load.

E.g., when your system is operating in cooling, you do not need as much cooling under low outdoor temperatures (e.g., 25°C) as under high outdoor temperatures (e.g., 35°C). Using this idea, the system automatically starts increasing its refrigerant temperature, automatically reducing the delivered capacity and increasing the system's efficiency.

- **Hi-sensible**

The refrigerant temperature is set higher (cooling) compared to basic operation. The focus under high sensible mode is comfort feeling for the customer.

The selection method of indoor units is important and has to be considered as the available capacity is not the same as under basic operation. For details concerning to Hi-sensible applications, please contact your installer.

Available comfort settings

For each of above modes a comfort level can be selected. It is related to the timing and the effort (energy consumption) which is put in achieving a certain room temperature by temporarily changing the refrigerant temperature to different values:

- Powerful
- Quick
- Mild
- Eco

8. Maintenance

CAUTION

Pay attention to the fan.

It is dangerous to inspect the unit while the fan is running.

Be sure to turn off the main switch before executing any maintenance task.

8.1. Maintenance after a long stop period (e.g., at the beginning of the season)

- Check and remove everything that might be blocking inlet and outlet vents of indoor units and outdoor units.
- Clean air filters and casings of indoor units(8). Refer to the operation manual supplied with the indoor units for details on how to proceed and make sure to install cleaned air filters back in the same position.
- Turn on the power at least 6 hours before operating the unit in order to ensure smoother operation. As soon as the power is turned on, the user interface display appears.

8.2. Maintenance before a long stop period (e.g., at the end of the season)

- Let the indoor units run in fan only operation for about half a day in order to dry the interior of the units. Refer to "6.1. Cooling, heating, fan only, and automatic operation" on page 53 for details on fan only operation.
- Turn off the power. The user interface display disappears.
- Clean air filters and casings of indoor units(8). Refer to the operation manual supplied with the indoor units for details on how to proceed and make sure to install cleaned air filters back in the same position.

9. Symptoms that are not air conditioner troubles

Following symptoms are not air conditioner troubles:

Symptom 1: The system does not operate

- The air conditioner does not start immediately after the ON/OFF button on the user interface is pressed. If the operation lamp lights, the system is in normal condition. To prevent overloading of the compressor motor, the air conditioner starts 5 minutes after it is turned ON again in case it was turned OFF just before. The same starting delay occurs after the operation mode selector button was used.
- If "Under Centralized Control" is displayed on the user interface, pressing the operation button causes the display to blink for a few seconds. The blinking display indicates that the user interface cannot be used.
- The system does not start immediately after the power supply is turned on. Wait one minute until the micro computer is prepared for operation.

Symptom 2: Cool/Heat cannot be changed over

- When the display shows (change-over under centralized control), it shows that this is a slave user interface.
- When the cool/heat changeover remote control switch is installed and the display shows (change-over under centralized control), this is because cool/heat changeover is controlled by the cool/ heat changeover remote control switch. Ask your dealer where the remote control switch is installed.

(8) Contact your installer or maintenance person to clean air filters and casings of the indoor unit. Maintenance tips and procedures for cleaning are provided in the installation/operation manuals of dedicated indoor units.

Symptom 3: Fan operation is possible, but cooling and heating do not work

- Immediately after the power is turned on. The micro computer is getting ready to operate and is performing a communication check with all indoor units. Please wait 12 minutes (max.) till this process is finished.

Symptom 4: The fan strength does not correspond to the setting

- The fan speed does not change even if the fan speed adjustment button in pressed. During heating operation, when the room temperature reaches the set temperature, the outdoor unit goes off and the indoor unit changes to whisper fan speed. This is to prevent cold air blowing directly on occupants of the room. The fan speed will not change, even when another indoor unit is in heating operation, if the button is pressed.

Symptom 5: The fan direction does not correspond to the setting

- The fan direction does not correspond with the user interface display. The fan direction does not swing. This is because the unit is being controlled by the micro computer.

Symptom 6: White mist comes out of a unit

Symptom 6.1: Indoor unit

- When humidity is high during cooling operation
  If the interior of an indoor unit is extremely contaminated, the temperature distribution inside a room becomes uneven. It is necessary to clean the interior of the indoor unit. Ask your dealer for details on cleaning the unit. This operation requires a qualified service person.
- Immediately after the cooling operation stops and if the room temperature and humidity are low. This is because warm refrigerant gas flows back into the indoor unit and generates steam.

Symptom 6.2: Indoor unit, outdoor unit

- When the system is changed over to heating operation after defrost operation. Moisture generated by defrost becomes steam and is exhausted.

Symptom 7: The user interface display reads "U4" or "U5" and stops, but then restarts after a few minutes

- This is because the user interface is intercepting noise from electric appliances other than the air conditioner. The noise prevents communication between the units, causing them to stop. Operation automatically restarts when the noise ceases.

Symptom 8: Noise of air conditioners

Symptom 8.1: Indoor unit

- A "zeen" sound is heard immediately after the power supply is turned on.
  The electronic expansion valve inside an indoor unit starts working and makes the noise. Its volume will reduce in about one minute.
- A continuous low "shah" sound is heard when the system is in cooling operation or at a stop.
  When the drain pump (optional accessories) is in operation, this noise is heard.
- A "pishi-pishi" squeaking sound is heard when the system stops after heating operation.
  Expansion and contraction of plastic parts caused by temperature change make this noise.
- A low "sah", "choro-choro" sound is heard while the indoor unit is stopped.
  When another indoor unit is in operation, this noise is heard. In order to prevent oil and refrigerant from remaining in the system, a small amount of refrigerant is kept flowing.

Symptom 8.2: Indoor unit, outdoor unit

- A continuous low hissing sound is heard when the system is in cooling or defrost operation. This is the sound of refrigerant gas flowing through both indoor and outdoor units.
- A hissing sound which is heard at the start or immediately after stopping operation or defrost operation. This is the noise of refrigerant caused by flow stop or flow change.

Symptom 8.3: Outdoor unit

- When the tone of operating noise changes.
  This noise is caused by the change of frequency.

Symptom 9: Dust comes out of the unit

- When the unit is used for the first time in a long time.
  This is because dust has gotten into the unit.

Symptom 10: The units can give off odours

- The unit can absorb the smell of rooms, furniture, cigarettes, etc., and then emit it again.

Symptom 11: The outdoor unit fan does not spin

- During operation.
  The speed of the fan is controlled in order to optimise product operation.

Symptom 12: The display shows "88"

- This is the case immediately after the main power supply switch is turned on and means that the user interface is in normal condition. This continues for one minute.

Symptom 13: The compressor in the outdoor unit does not stop after a short heating operation

- This is to prevent refrigerant from remaining in the compressor. The unit will stop after 5 to 10 minutes.

Symptom 14: The inside of an outdoor unit is warm even when the unit has stopped

- This is because the crankcase heater is warming the compressor so that the compressor can start smoothly.

Symptom 15: Hot air can be felt when the indoor unit is stopped

- Several different indoor units are being run on the same system. When another unit is running, some refrigerant will still flow through the unit.

10. Troubleshooting

If one of the following malfunctions occur, take the measures shown below and contact your dealer.

WARNING

Stop operation and shut off the power if anything unusual occurs (burning smells etc.).

Leaving the unit running under such circumstances may cause breakage, electric shock or fire. Contact your dealer.

The system must be repaired by a qualified service person:

- If a safety device such as a fuse, a breaker or an earth leakage breaker frequently actuates or the ON/OFF switch does not properly work.
  Measure: Turn off the main power switch.
- If water leaks from the unit.
  Measure: Stop the operation.
- The operation switch does not work well.
  Measure: Turn off the power.
- If the user interface display indicates the unit number, the operation lamp flashes and the malfunction code appears.
  Measure: Notify your installer and report the malfunction code.

If the system does not properly operate except for the above mentioned cases and none of the above mentioned malfunctions is evident, investigate the system according to the following procedures.

1 If the system does not operate at all:
   - Check if there is no power failure.
     Wait until power is restored. If power failure occurs during operation, the system automatically restarts immediately after the power supply is recovered.
   - Check if no fuse has blown or breaker has worked.
     Change the fuse or reset the breaker if necessary.

2 If the system goes into fan only operation, but as soon as it goes into heating or cooling operation, the system stops:
   Check if air inlet or outlet of outdoor or indoor unit is not blocked by obstacles. Remove any obstacle and make it well-ventilated.
   Check if the user interface display shows (time to clean the air filter). (Refer to "17. Maintenance and service" on page 46 and "Maintenance" in the indoor unit manual.)

3 The system operates but cooling or heating is insufficient:
   - Check if air inlet or outlet of outdoor or indoor unit is not blocked by obstacles.
   - Remove any obstacle and make it well-ventilated.
   - Check if the air filter is not clogged (refer to "Maintenance" in the indoor unit manual).
   - Check the temperature setting.
   - Check the fan speed setting on your user interface.
   - Check for open doors or windows. Shut doors and windows to prevent wind from coming in.
   - Check if there are too many occupants in the room during cooling operation. Check if the heat source of the room is excessive.
   - Check if direct sunlight enters the room. Use curtains or blinds.
   - Check if the air flow angle is proper.

If after checking all above items, it is impossible to fix the problem yourself, contact your installer and state the symptoms, the complete model name of the air conditioner (with manufacturing number if possible) and the installation date (possibly listed on the warranty card).

11. After-sales service and warranty

11.1. Warranty period

- This product includes a warranty card that was filled in by the dealer at the time of installation. The completed card has to be checked by the customer and stored carefully.
- If repairs to the air conditioner are necessary within the warranty period, contact your dealer and keep the warranty card at hand.

11.2. After-sales service

11.2.1. Recommendations for maintenance and inspection

Since dust collects when using the unit for several years, performance of the unit will deteriorate to some extent. As taking apart and cleaning interiors of units requires technical expertise and in order to ensure the best possible maintenance of your units, we recommend to enter into a maintenance and inspection contract on top of normal maintenance activities. Our network of dealers has access to a permanent stock of essential components in order to keep your air conditioner in operation as long as possible. Contact your dealer for more information.

When asking your dealer for an intervention, always state:

- The complete model name of the air conditioner.
- The manufacturing number (stated on the nameplate of the unit).
- The installation date.
- The symptoms or malfunction, and details of the defect.

WARNING

- Do not modify, disassemble, remove, reinstall or repair the unit yourself as incorrect dismantling or installation may cause an electric shock or fire. Contact your dealer.
- In case of accidental refrigerant leaks, make sure there are no naked flames. The refrigerant itself is entirely safe, non-toxic and non-combustible, but it will generate toxic gas when it accidentally leaks into a room where combustible air from fan heaters, gas cookers, etc. is present. Always have qualified service personnel confirm that the point of leakage has been repaired or corrected before resuming operation.

11.2.2. Recommended inspection and maintenance cycles

Be aware that the mentioned maintenance and replacement cycles do not relate to the warranty period of the components.

Table 1: "Inspection Cycle" and "Maintenance Cycle" list

Table 1 assumes the following conditions of use:

- Normal use without frequent starting and stopping of the unit. Depending on the model, we recommend not starting and stopping the machine more than 6 times/hour.
- Operation of the unit is assumed to be 10 hours/day and 2,500 hours/year.

Table 1

Component	Inspection cycle	Maintenance cycle (replacements and/or repairs)
Electric motor	1 year	20,000 hours
PCB		25,000 hours
Heat exchanger		5 years
Sensor (thermistor, etc.)		5 years
User interface and switches		25,000 hours
Drain pan		8 years
Expansion valve		20,000 hours
Solenoid valve		20,000 hours

NOTICE

1 Table 1 indicates main components. Refer to your maintenance and inspection contract for more details.

2 Table 1 indicates recommended intervals of maintenance cycles. However, in order to keep the unit operational as long as possible, maintenance work may be required sooner. Recommended intervals can be used for appropriate maintenance design in terms of budgeting maintenance and inspection fees. Depending on the content of the maintenance and inspection contract, inspection and maintenance cycles may in reality be shorter than listed.

11.3. Shortening of "maintenance cycle" and "replacement cycle" needs to be considered in following situations

The unit is used in locations where:

- Heat and humidity fluctuate out of the ordinary.
- Power fluctuation is high (voltage, frequency, wave distortion, etc.) (the unit cannot be used if power fluctuation is outside the allowable range).
- Bumps and vibrations are frequent.
- Dust, salt, harmful gas or oil mist such as sulphurous acid and hydrogen sulfide may be present in the air.
- The machine is started and stopped frequently or operation time is long (sites with 24 hour air-conditioning).

Recommended replacement cycle of wear parts

Table 2: "Replacement Cycle" list

Component	Inspection cycle	Maintenance cycle (replacements and/or repairs)
Air filter	1 year	5 years
High efficiency filter		1 year
Fuse		10 years
Crankcase heater		8 years

NOTICE

- Table 2: "Replacement Cycle" list indicates main components. Refer to your maintenance and inspection contract for more details.
- Table 2: "Replacement Cycle" list indicates recommended intervals of replacement cycles. However, in order to keep the unit operational as long as possible, maintenance work may be required sooner. Recommended intervals can be used for appropriate maintenance design in terms of budgeting maintenance and inspection fees. Contact your dealer for details.

INFORMATION

Damage due to taking apart or cleaning interiors of units by anyone other than our authorised dealers may not be included in the warranty.

Moving and discarding the unit

- Contact your dealer for removing and reinstalling the total unit. Moving units requires technical expertise.
- This unit uses hydrofluorocarbon. Contact your dealer when discarding this unit. It is required by law to collect, transport and discard the refrigerant in accordance with the "hydrofluorocarbon collection and destruction" regulations.

11.4. Malfunction codes

In case a malfunction code appears on the indoor unit user interface display, contact your installer and inform the malfunction code, the unit type, and serial number (you can find this information on the nameplate of the unit).

For your reference, a list with malfunction codes is provided. You can, depending on the level of the malfunction code, reset the code by pushing the ON/OFF button. If not, ask your installer for advice.

Malfunction code	
Main code	Contents
A0	External protection device was activated
A1	EEPROM failure (indoor)
A3	Drain system malfunction (indoor)
A6	Fan motor malfunction (indoor)
A7	Swing flap motor malfunction (indoor)
A9	Expansion valve malfunction (indoor)
AF	Drain malfunction (indoor unit)
AH	Filter dust chamber malfunction (indoor)
AJ	Capacity setting malfunction (indoor)
C1	Transmission malfunction between main PCB and sub PCB (indoor)
C4	Heat exchanger thermistor malfunction (indoor; liquid)
C5	Heat exchanger thermistor malfunction (indoor; gas)
C9	Suction air thermistor malfunction (indoor)
CA	Discharge air thermistor malfunction (indoor)
CE	Movement detector or floor temperature sensor malfunction (indoor)
CJ	User interface thermistor malfunction (indoor)
E1	PCB malfunction (outdoor)
E2	Current leakage detector was activated (outdoor)
E3	High pressure switch was activated
E4	Low pressure malfunction (outdoor)
E5	Compressor lock detection (outdoor)
E7	Fan motor malfunction (outdoor)
E9	Electronic expansion valve malfunction (outdoor)
F3	Discharge temperature malfunction (outdoor)
F4	Abnormal suction temperature (outdoor)
F6	Refrigerant overcharge detection
H3	High pressure switch malfunction
H4	Low pressure switch malfunction
H7	Fan motor trouble (outdoor)
H9	Ambient temperature sensor malfunction (outdoor)
J1	Pressure sensor malfunction
J2	Current sensor malfunction
J3	Discharge temperature sensor malfunction (outdoor)
J4	Heat exchanger gas temperature sensor malfunction (outdoor)
J5	Suction temperature sensor malfunction (outdoor)
J6	De-icing temperature sensor malfunction (outdoor)
J7	Liquid temperature sensor (after subcool HE) malfunction (outdoor)
J8	Liquid temperature sensor (coil) malfunction (outdoor)
J9	Gas temperature sensor (after subcool HE) malfunction (outdoor)
JA	High pressure sensor malfunction (S1NPH)
JC	Low pressure sensor malfunction (S1NPL)
L1	INV PCB abnormal
L4	Fin temperature abnormal
L5	Inverter PCB faulty
L8	Compressor over current detected
L9	Compressor lock (startup)

Malfunction code	
Main code	Contents
LC	Transmission outdoor unit - inverter: INV transmission trouble
P1	INV unbalanced power supply voltage
P2	Autocharge operation related
P4	Fin thermistor malfunction
P8	Autocharge operation related
P9	Autocharge operation related
PE	Autocharge operation related
PJ	Capacity setting malfunction (outdoor)
U0	Abnormal low pressure drop, faulty expansion valve
U1	Reversed power supply phase malfunction
U2	INV voltage power shortage
U3	System test run not yet executed
U4	Faulty wiring indoor/outdoor
U5	Abnormal user interface - indoor communication
U7	Faulty wiring to outdoor/outdoor
U8	Abnormal main-sub user interface communication
U9	System mismatch. Wrong type of indoor units combined. Indoor unit malfunction.
UA	Connection malfunction over indoor units or type mismatch
UC	Centralized address duplication
UE	Malfunction in communication centralized control device - indoor unit
UF	Auto address malfunction (inconsistency)
UH	Auto address malfunction (inconsistency)

12. Important information regarding the refrigerant used

This product contains fluorinated greenhouse gases. Do not vent gases into the atmosphere.

Refrigerant type: R410A

GWP[1] value: 2087.5

[1] GWP=global warming potential

Periodical inspections for refrigerant leaks may be required depending on European or local legislation. Please contact your local dealer for more information.

EAC

4P345099-1 C 00000002

Copyright 2013 Daikin

DAIKIN EUROPE N.V.

Zandvoordestraat 300, B-8400 Oostende, Belgium

4P345099-1C 2015.02