OH14-01

Option Handbook
VRV System

Part 1 Introduction 5

1. Introduction 6

Part 2 Control Systems 15

1. Remote Controller (Wireless Type) 18
2. Remote Controller (Wired Type) 210
3. Navigation Remote Controller (Wired Remote Controller) 215
4. Wired Remote Controller with Weekly Schedule Timer 231
5. Simplified Remote Controller 238
6. Remote Controller for Hotel Use 242
7. Adaptor for Wiring 247
8. Wiring Adaptor for Electrical Appendices (1) (2) 259
9. Remote Sensor (For Indoor Temperature) 281
10. Installation Box for Adaptor PCB 283
11. External Control Adaptor for Outdoor Unit 305
12. Adaptor for Multi Tenant 314
13. External Control Adaptor for Cooling / Heating 318
14. Remote Controller Box with Key 322
15. Residential Central Remote Controller 324
16. Central Remote Controller 335
17. Electrical Box with Earth Terminal 366
18. Unified ON/OFF Controller 368
19. Noise Filter (For Electromagnetic Interface Use only) 376
20. Schedule Timer 379
21. Interface Adaptor for SkyAir Series 397
22. Central Control Adaptor Kit 399
23. Wiring Adaptor for Other Air-Conditioner 403
24. DIII-NET Expander Adaptor 407
25. intelligent Touch Controller 412
26. intelligent Touch Manager 452
27. Di Unit 477
28. Dio Unit 480
29. Interface for use in BACnet® 482
30. Optional DIII Board 488
31. Optional Di Board 491
32. Interface for use in LonWorks® 494
33. Home Automation Interface Adaptor 501
34. Unification Adaptor for Computerized Control 507

Part 3 Indoor Units 513

1. FXFQ-S — Ceiling Mounted Cassette (Round Flow with Sensing) Type 516
2. FXF(Q) — Ceiling Mounted Cassette (Round/Multi Flow) Type 526
3. FXZQ — Ceiling Mounted Cassette (Compact Multi Flow) Type 593
4. FXUQ-A — 4-Way Flow Ceiling Suspended Type 605

5. FXC (Q) — Ceiling Mounted Cassette (Double Flow) Type.....608
6. FXK (Q) — Ceiling Mounted Cassette Corner Type 616
7. FXD(Q) — Slim Ceiling Mounted Duct Type.....642
8. FXYD — Ceiling Mounted Low Silhouette Duct Type 643
9. FXS(YQ) / FXYB — Ceiling Mounted Built-in Type.....644
10. FXM(Q) — Ceiling Mounted Duct Type,
Outdoor Air-Processing Unit 679
11. FXH(Q) — Ceiling Mounted Suspended Type 703
12. FXA (Q) — Wall Mounted Type 712
13. FXL (Q) / FXN (Q) —
Floor Standing Type / Concealed Floor Standing Type 722
14. FXVQ — Floor Standing Duct Type 723

Part 4 Outdoor Units (including BS units) 731

1. Cool / Heat Selector 733
2. Fixing Box 734
3. REFNET Header 735
4. REFNET Joint 745
5. Outdoor Unit Multi Connection Piping Kit.....759
6. Pipe Size Reducer 803
7. Auxiliary Pipe Kit 805
8. Closed Pipe Kit.....806
9. Central Drain Pan Kit 807
10. Central Drain Plug.....812
11. Wire Fixture for Preventing Overturning.....813
12. Fixture for Preventing Overturning 815
13. Refrigerant Pipe Filter Kit 816
14. Digital Pressure Gauge 819
15. Strainer Kit 821

Part 5 Index 823

Part 1
Introduction

1. Introduction 6
1.1 Control Systems 6
1.2 Indoor Units 10
1.3 Outdoor Units 14

1. Introduction

This Option Handbook includes the following accessories.

1.1 Control Systems

		Page	56	37	161	18	79	79	100	120	138	185	56	37	161	18	79	79	100	120	138	185	210	215	231	238
VRV II	Outdoor Air Processing Unit	FXM-MFV1	I	I	I	I	I	I	I	I	I	I	I	I	I	I	I	I	I	I	I	I	○	I	I	I
VRV II	Concealed Floor Standing	FXL-LVE FXN-LVE	I	I	I	I	I	○	I	I	I	I	I	I	I	I	I	○	I	I	I	I	○	○	○	○
VRV II	Floor Standing	FXA-LVE	I	I	I	I	I	I	I	I	○	I	I	I	I	I	I	I	I		○	I	○	○	○	I
VRV II	Ceiling Suspended	FXH-LVE	I	I	I	I	I	I	I	○	I	I	I	I	I	I	I	I	I	○	I	I	○	○	○	I
VRV II	Ceiling Mounted Duct	FXM-LVE	I	I	I	I	I	○	I	I	I	I	I	I	I	I	I	○	I	I	I	I	○	○	○	○
VRV II	Ceiling Mounted Built–in with Rear Suction	FXYB-KV1	I	I	I	I	I	○	I	I	I	I	I	I	I	I	I	○	I	I	I	I	○	○	○	○
VRV II	Ceiling Mounted Built–in	FXS-LVE	I	I	I	I	I	○	I	I	I	I	I	I	I	I	I	○	I	I	I	I	○	○	○	○
VRV II	Ceiling Mounted Duct <Low Silhouette>	FXYD-KAVE	I	I	I	I	I	○	I	I	I	I	I	I	I	I	I	○	I	I	I	I	○	○	○	○
VRV II	Slim Ceiling Mounted Duct	FXD-PVE(T) FXD-MVE(T)	I	I	I	I	I	○	I	I	I	I	I	I	I	I	I	○	I	I	I	I	○	○	○	○
VRV II	Ceiling Mounted Cassette Corner	FXK-LVE	I	I	I	I	○	I	I	I	I	I	I	I	I	I	○	I	I	I	I	I	○	○	○	I
VRV II	Ceiling Mounted Cassette <Double Flow>	FXC-LVE	I	I	I	○	I	I	I	I	I	I	I	I	I	○	I	I	I	I	I	I	○	○	○	I
VRV II	Ceiling Mounted Cassette <Multi Flow>	FXF-LVE	I	○	I	I	I	I	I	I	I	I	I	○	I	I	I	I	I	I	I	I	○	○	○	I
VRV III / VRV IV	Centralized Bs Units	BSV4Q-P BSV6Q-P	I	I	I	I	I	I	I	I	I	I	I	I	I	I	I	I	I	I	I	I	I	I	I	I
VRV III / VRV IV	BS Units	BSVQ-PV1	I	I	I	I	I	I	I	I	I	I	I	I	I	I	I	I	I	I	I	I	I	I	I	I
VRV III / VRV IV	Outdoor Air Processing Unit	FXMQ-MFV1	I	I	I	I	I	I	I	I	I	I	I	I	I	I	I	I	I	I	I	I	○	○	○	I
VRV III / VRV IV	Ceiling Concealed (Duct)	FXDYQ-M(A)	I	I	I	I	I	○	I	I	I	I	I	I	I	I	I	○	I	I	I	I	○	○	○	○
VRV III / VRV IV	Ceiling Mounted Built–in	FXSYQ-M	I	I	I	I	I	○	I	I	I	I	I	I	I	I	I	○	I	I	I	I	○	○	○	○
VRV III / VRV IV	Floor Standing	FXVQ-MY1(6)	I	I	I	I	I	I	I	I	I	I	I	I	I	I	I	I	I	I	I	I	○	○	○	I
VRV III / VRV IV	Floor Standing / Concealed Floor Standing	FXLQ-MAVE FXNQ-MAVE	I	I	I	I	I	○	I	I	I	I	I	I	I	I	I	○	I	I	I	I	○	○	○	○
VRV III / VRV IV	Wall Mounted	FXAQ-PVE	I	I	I	I	I	I	I	I	○	I	I	I	I	I	I	I	I	I	○	I	○	○	○	I
VRV III / VRV IV	Ceiling Suspended	FXHQ-MAVE	I	I	I	I	I	I	I	○	I	I	I	I	I	I	I	I	I	○	I	I	○	○	○	I
VRV III / VRV IV	Ceiling Mounted Duct	FXMQ-MAVE	I	I	I	I	I	○	I	I	I	I	I	I	I	I	I	○	I	I	I	I	○	○	○	○
VRV III / VRV IV	Ceiling Mounted Duct	FXMQ-PVE	I	I	I	I	I	I	○	I	I	I	I	I	I	I	I	I	○	I	I	I	○	○	○	○
VRV III / VRV IV	Slim Ceiling Mounted Duct	FXDQ-PBVE(T) FXDQ-NBVE(T)	I	I	I	I	I	I	○	I	I	I	I	I	I	I	I	I	○	I	I	I	○	○	○	○
VRV III / VRV IV	Ceiling Mounted Cassette Corner	FXKQ-MAVE	I	I	I	I	○	I	I	I	I	I	I	I	I	I	○	I	I	I	I	I	○	○	○	I
VRV III / VRV IV	Ceiling Mounted Cassette <Double Flow>	FXCQ-MVE	I	I	I	○	I	I	I	I	I	I	I	I	I	○	I	I	I	I	I	I	○	○	○	I
VRV III / VRV IV	Ceiling Suspended Cassette	FXUQ-AVEB	I	I	I	I	I	I	I	I	I	○	I	I	I	I	I	I	I	I	I	○	○	○	○	I
VRV III / VRV IV	Ceiling Mounted Cassette <Compact Multi Flow>	FXZQ-MVE	I	I	○	I	I	I	I	I	I	I	I	I	○	I	I	I	I	I	I	I	○	○	○	I
VRV III / VRV IV	Ceiling Mounted Cassette <Round Flow>	FXFQ-LUV1	○	I	I	I	I	I	I	I	I	I	○	I	I	I	I	I	I	I	I	I	○	○	○	I
VRV III / VRV IV	Ceiling Mounted Cassette <Round Flow>	FXFQ-PVE	○	I	I	I	I	I	I	I	I	I	○	I	I	I	I	I	I	I	I	I	○	○	○	I
VRV III / VRV IV	Ceiling Mounted Cassette <Round Flow with Sensing>	FXFQ-SVM	○	I	I	I	I	I	I	I	I	I	○	I	I	I	I	I	I	I	I	I	○	○	○	I
			BRC7F635F	BRC7E65	BRC7E531W	BRC7C67	BRC4C63	BRC4C64	BRC4C66	BRC7EA66	BRC7EA619	BRC7CB59	BRC7F634F	BRC7E61W	BRC7E530W	BRC7C62	BRC4C61	BRC4C62	BRC4C65	BRC7EA63W	BRC7EA618	BRC7CB58	BRC1C62	BRC1E62	BRC1D61	BRC2C51
			Remote Controller (Wireless Type) C/O										Remote Controller (Wireless Type) H/P										Remote Controller (Wired Type)	Navigation Remote Controller (Wired Type)	Wired Remote Controller with Weekly Schedule Timer	Simplified Remote Controller

		Page	242	250	250	250	250	247	252	254	257	259	259	259	270	270	270	270	281	281	283	292	287	294	295	294	297	301	299	303
VRV II	Outdoor Air Processing Unit	FXM-MFV1	I	I	I	I	I	○	I	I	I	I	○	I	○	I	I	I	I	I	I	I	I	I	I	I	I	I	I	I
	Concealed Floor Standing	FXL-LVE FXN-LVE	○	I	I	I	I	○	I	I	I	I	○	I	○	I	I	I	○	I	I	I	I	I	I	I	I	I	I	I
	Floor Standing	FXA-LVE	I	I	I	I	I	I	I	I	I	I	○	I	○	I	I	I	○	I	I	I	I	I	I	I	I	I	○	I
	Ceiling Suspended	FXH-LVE	I	○	I	I	I	I	I	I	I	I	I	○	I	○	I	I	○	I	I	I	I	I	I	I	I	○	I	I
	Ceiling Mounted Duct	FXM-LVE	○	I	I	I	I	○	I	I	I	I	○	I	○	I	I	I	○	I	I	I	I	I	I	I	I	I	I	I
	Ceiling Mounted Built–in with Rear Suction	FXYB-KV1	○	I	I	I	I	○	I	I	I	I	○	I	○	I	I	I	○	I	I	I	I	I	I	I	I	I	I	I
	Ceiling Mounted Built–in	FXS-LVE	○	I	I	I	I	○	I	I	I	I	○	I	○	I	I	I	○	I	I	I	I	I	I	○	I	I	I	I
	Ceiling Mounted Duct <Low Silhouette>	FXYD-KAVE	○	I	I	I	I	○	I	I	I	I	○	I	○	I	I	I	○	I	I	I	I	I	○	I	I	I	I	I
	Slim Ceiling Mounted Duct	FXD-PVE(T) FXD-MVE(T)	○	I	○	I	I	I	I	I	I	○	I	I	I	I	I	○	○	I	I	I	○	I	I	I	I	I	I	I
	Ceiling Mounted Cassette Corner	FXK-LVE	I	I	I	I	I	○	I	I	I	I	○	I	○	I	I	I	○	I	I	I	I	I	I	I	I	I	I	I
	Ceiling Mounted Cassette <Double Flow>	FXC-LVE	I	I	I	I	I	○	I	I	I	I	○	I	○	I	I	I	○	I	I	I	I	○	I	I	I	I	I	I
	Ceiling Mounted Cassette <Multi Flow>	FXF-LVE	I	I	I	I	○	I	I	I	I	I	I	○	I	I	○	I	I	I	I	○	I	I	I	I	I	I	I	I
VRV III / *VRV* IV	Centralized Bs Units	BSV4Q-P BSV6Q-P	I	I	I	I	I	I	I	I	I	I	I	I	I	I	I	I	I	I	I	I	I	I	I	I	I	I	I	I
	BS Units	BSVQ-PV1	I	I	I	I	I	I	I	I	I	I	I	I	I	I	I	I	I	I	I	I	I	I	I	I	I	I	I	I
	Outdoor Air Processing Unit	FXMQ-MFV1	I	I	I	I	I	○	I	I	I	I	○	I	○	I	I	I	I	I	I	I	I	I	I	I	I	I	I	I
	Ceiling Concealed (Duct)	FXDYQ-M(A)	○	I	I	I	I	○	I	I	I	I	○	I	○	I	I	I	○	I	I	I	I	I	I	I	I	I	I	I
	Ceiling Mounted Built–in	FXSYQ-M	○	I	I	I	I	○	I	I	I	I	○	I	○	I	I	I	○	I	I	I	I	I	I	○	I	I	I	I
	Floor Standing	FXVQ-MY1(6)	I	I	I	I	I	I	I	I	○	I	I	○	I	I	I	I	○	I	I	I	I	I	I	I	I	I	I	I
	Floor Standing / Concealed Floor Standing	FXLQ-MAVE FXNQ-MAVE	○	I	I	I	I	○	I	I	I	I	○	I	○	I	I	I	○	I	I	I	I	I	I	I	I	I	I	I
	Wall Mounted	FXAQ-PVE	I	I	I	I	I	I	I	I	I	I	○	I	○	I	I	I	○	I	I	I	I	I	I	I	I	I	○	I
	Ceiling Suspended	FXHQ-MAVE	I	○	I	I	I	I	I	I	I	I	I	○	I	○	I	I	○	I	I	I	I	I	I	I	I	○	I	I
	Ceiling Mounted Duct	FXMQ-MAVE	○	I	I	I	I	○	I	I	I	I	○	I	○	I	I	I	○	I	I	I	I	I	I	I	I	I	I	I
		FXMQ-PVE	○	I	I	I	I	I	I	○	I	I	○	I	○	I	I	I	I	○	I	I	I	I	I	I	○	I	I	I
	Slim Ceiling Mounted Duct	FXDQ-PBVE(T) FXDQ-NBVE(T)	○	I	○	I	I	I	I	I	I	○	I	I	I	I	I	○	○	I	I	I	○	I	I	I	I	I	I	I
	Ceiling Mounted Cassette Corner	FXKQ-MAVE	I	I	I	I	I	○	I	I	I	I	○	I	○	I	I	I	○	I	I	I	I	I	I	I	I	I	I	I
	Ceiling Mounted Cassette <Double Flow>	FXCQ-MVE	I	I	I	I	I	○	I	I	I	I	○	I	○	I	I	I	○	I	I	I	I	○	I	I	I	I	I	I
	Ceiling Suspended Cassette	FXUQ-AVEB	I	I	I	I	I	I	I	I	I	I	I	I	I	I	○	I	I	○	I	I	I	I	I	I	I	I	I	○
	Ceiling Mounted Cassette <Compact Multi Flow>	FXZQ-MVE	I	I	I	○	I	I	I	I	I	I	I	○	I	I	○	I	○	I	I	I	○	I	I	I	I	I	I	I
	Ceiling Mounted Cassette <Round Flow>	FXFQ-LUV1	I	I	I	I	I	I	○	I	I	I	I	○	I	I	○	I	I	○	○	I	I	I	I	I	I	I	I	I
	Ceiling Mounted Cassette <Round Flow>	FXFQ-PVE	I	I	I	I	I	I	○	I	I	I	I	○	I	I	○	I	I	○	○	I	I	I	I	I	I	I	I	I
	Ceiling Mounted Cassette <Round Flow with Sensing>	FXFQ-SVM	I	I	I	I	I	I	○	I	I	I	I	○	I	I	○	I	I	○	○	I	I	I	I	I	I	I	I	I
			BRC3A61	KRP1BA54	KRP1B56	KRP1BA57	KRP1BA59	KRP1B61	KRP1C63	KRP1C64	KRP1C67	KRP2A53	KRP2A61	KRP2A62	KRP4AA51	KRP4AA52	KRP4AA53	KRP4A54	KRCS01-1B	KRCS01-4B	KRP1H98	KRP1DA98	KRP1BA101	KRP1B96	KRP1B100	KRP4A91	KRP4A96	KRP1CA93	KRP4AA93	KRP1BA97
			Remote Controller for Hotel Use	Adaptor for Wiring								Wiring Adaptor for Electrical Appendices (1)			Wiring Adaptor for Electrical Appendices (2)				Remote Sensor (For Indoor Temperature)		Installation box for adaptor PCB									

	Page		305	305	305	314	318	322	324	335	366	366	366	368	376	379	397	399	403	407
VRV II	Outdoor Air Processing Unit	FXM-MFV1	I	I	I	I	I	I	I	○	I	I	I	○	I	○	I	I	I	I
	Concealed Floor Standing	FXL-LVE FXN-LVE	I	○	I	I	I	I	○	○	○	○	○	○	○	○	I	I	I	○
	Floor Standing	FXA-LVE	I	○	I	I	I	I	○	○	○	○	○	○	○	○	I	I	I	○
	Ceiling Suspended	FXH-LVE	I	I	○	I	I	I	○	○	○	○	○	○	○	○	I	I	I	○
	Ceiling Mounted Duct	FXM-LVE	I	○	I	I	I	I	○	○	○	○	○	○	○	○	I	I	I	○
	Ceiling Mounted Built–in with Rear Suction	FXYB-KV1	I	○	I	I	I	I	○	○	○	○	○	○	○	○	I	I	I	○
	Ceiling Mounted Built–in	FXS-LVE	I	○	I	I	I	I	○	○	○	○	○	○	○	○	I	I	I	○
	Ceiling Mounted Duct <Low Silhouette>	FXYD-KAVE	I	○	I	I	I	I	○	○	○	○	○	○	○	○	I	I	I	○
	Slim Ceiling Mounted Duct	FXD-PVE(T) FXD-MVE(T)	○	I	I	I	I	I	○	○	○	○	○	○	○	○	I	I	I	○
	Ceiling Mounted Cassette Corner	FXK-LVE	I	○	I	I	I	I	○	○	○	○	○	○	○	○	I	I	I	○
	Ceiling Mounted Cassette <Double Flow>	FXC-LVE	I	○	I	I	I	I	○	○	○	○	○	○	○	○	I	I	I	○
	Ceiling Mounted Cassette <Multi Flow>	FXF-LVE	I	I	○	I	I	I	○	○	○	○	○	○	○	○	I	I	I	○
VRV III / *VRV* IV	Centralized Bs Units	BSV4Q-P BSV6Q-P	I	I	I	○	I	I	I	I	I	I	I	I	I	I	I	I	I	I
	BS Units	BSVQ-PV1	I	I	I	○	I	I	I	I	I	I	I	I	I	I	I	I	I	I
	Outdoor Air Processing Unit	FXMQ-MFV1	I	○	I	I	I	I	I	○	○	○	I	○	○	○	I	I	I	I
	Ceiling Concealed (Duct)	FXDYQ-M(A)	I	○	I	I	I	I	○	○	○	○	○	○	○	○	I	I	I	○
	Ceiling Mounted Built–in	FXSYQ-M	I	○	I	I	I	I	○	○	○	○	○	○	○	○	I	I	I	○
	Floor Standing	FXVQ-MY1(6)	I	I	○	I	○	○	○	○	○	○	○	○	○	○	I	I	I	○
	Floor Standing / Concealed Floor Standing	FXLQ-MAVE FXNQ-MAVE	I	○	I	I	I	I	○	○	○	○	○	○	○	○	I	I	I	○
	Wall Mounted	FXAQ-PVE	I	○	I	○	I	I	○	○	○	○	○	○	○	○	I	I	I	○
	Ceiling Suspended	FXHQ-MAVE	I	I	○	I	I	I	○	○	○	○	○	○	○	○	I	I	I	○
	Ceiling Mounted Duct	FXMQ-MAVE	I	○	I	I	I	I	○	○	○	○	○	○	○	○	I	I	I	○
		FXMQ-PVE	I	○	I	○	I	I	○	○	○	○	○	○	○	○	I	I	I	○
	Slim Ceiling Mounted Duct	FXDQ-PBVE(T) FXDQ-NBVE(T)	○	I	I	I	I	I	○	○	○	○	○	○	○	○	I	I	I	○
	Ceiling Mounted Cassette Corner	FXKQ-MAVE	I	○	I	I	I	I	○	○	○	○	○	○	○	○	I	I	I	○
	Ceiling Mounted Cassette <Double Flow>	FXCQ-MVE	I	○	I	I	I	I	○	○	○	○	○	○	○	○	I	I	I	○
	Ceiling Suspended Cassette	FXUQ-AVEB	I	I	I	I	I	I	○	○	○	○	○	○	○	○	I	I	I	○
	Ceiling Mounted Cassette <Compact Multi Flow>	FXZQ-MVE	I	I	○	I	I	I	○	○	○	○	○	○	○	○	I	I	I	○
	Ceiling Mounted Cassette <Round Flow>	FXFQ-LUV1	I	I	○	○	I	I	○	○	○	○	○	○	○	○	I	I	I	○
	Ceiling Mounted Cassette <Round Flow>	FXFQ-PVE	I	I	○	○	I	I	○	○	○	○	○	○	○	○	I	I	I	○
	Ceiling Mounted Cassette <Round Flow with Sensing>	FXFQ-SVM	I	I	○	○	I	I	○	○	○	○	○	○	○	○	I	I	I	○
			DTA104A53	DTA104A61	DTA104A62	DTA114A61	KRP6A1	KRCB37-1	DCS303A51	DCS302CA61	KJB212AA	KJB311AA	KJB411A	DCS301BA61	KEK26-1A	DST301BA61	DTA112BA51	DTA107A55	DTA103A51	DTA109A51
			External Control Adaptor for Outdoor Unit			Adaptor for Multi Tenant	External Control Adaptor for Cooling/Heating	Remote Controller Box with Key	Residential Central Remote Controller	Central Remote Controller	Electrical Box with Earth Terminal			Unified ON/OFF Controller	Noise Filter (For Electromagnetic Interface Use only)	Schedule Timer	Interface Adaptor for SkyAir Series	Central control adaptor kit	Wiring Adaptor for Other Air-Conditioner	DIII-NET Expander Adaptor

	Page		411	412	448	465	466	467	–	477	480	482	488	491	494	501	507
VRV II	Outdoor Air Processing Unit	FXM-MFV1	–	–	–	–	–	–	–	–	–	–	–	–	–	–	–
	Concealed Floor Standing	FXL-LVE FXN-LVE	○	○	○	○	○	○	○	○	○	○	○	○	○	–	○
	Floor Standing	FXA-LVE	○	○	○	○	○	○	○	○	○	○	○	○	○	–	○
	Ceiling Suspended	FXH-LVE	○	○	○	○	○	○	○	○	○	○	○	○	○	–	○
	Ceiling Mounted Duct	FXM-LVE	○	○	○	○	○	○	○	○	○	○	○	○	○	–	○
	Ceiling Mounted Built–in with Rear Suction	FXYB-KV1	○	○	○	○	○	○	○	○	○	○	○	○	○	–	○
	Ceiling Mounted Built–in	FXS-LVE	○	○	○	○	○	○	○	○	○	○	○	○	○	–	○
	Ceiling Mounted Duct <Low Silhouette>	FXYD-KAVE	○	○	○	○	○	○	○	○	○	○	○	○	○	–	○
	Slim Ceiling Mounted Duct	FXD-PVE(T) FXD-MVE(T)	○	○	○	○	○	○	○	○	○	○	○	○	○	–	○
	Ceiling Mounted Cassette Corner	FXK-LVE	○	○	○	○	○	○	○	○	○	○	○	○	○	–	○
	Ceiling Mounted Cassette <Double Flow>	FXC-LVE	○	○	○	○	○	○	○	○	○	○	○	○	○	–	○
	Ceiling Mounted Cassette <Multi Flow>	FXF-LVE	○	○	○	○	○	○	○	○	○	○	○	○	○	–	○
VRV III / *VRV* IV	Centralized Bs Units	BSV4Q-P BSV6Q-P	–	–	–	–	–	–	–	–	–	–	–	–	–	–	–
	BS Units	BSVQ-PV1	–	–	–	–	–	–	–	–	–	–	–	–	–	–	–
	Outdoor Air Processing Unit	FXMQ-MFV1	–	–	–	–	–	–	–	–	–	–	–	–	–	–	–
	Ceiling Concealed (Duct)	FXDYQ-M(A)	○	○	○	○	○	○	○	○	○	○	○	○	○	○	○
	Ceiling Mounted Built–in	FXSYQ-M	○	○	○	○	○	○	○	○	○	○	○	○	○	○	○
	Floor Standing	FXVQ-MY1(6)	○	○	○	○	○	○	○	○	○	○	○	○	○	○	○
	Floor Standing / Concealed Floor Standing	FXLQ-MAVE FXNQ-MAVE	○	○	○	○	○	○	○	○	○	○	○	○	○	○	○
	Wall Mounted	FXAQ-PVE	○	○	○	○	○	○	○	○	○	○	○	○	○	○	○
	Ceiling Suspended	FXHQ-MAVE	○	○	○	○	○	○	○	○	○	○	○	○	○	○	○
	Ceiling Mounted Duct	FXMQ-MAVE	○	○	○	○	○	○	○	○	○	○	○	○	○	○	○
		FXMQ-PVE	○	○	○	○	○	○	○	○	○	○	○	○	○	○	○
	Slim Ceiling Mounted Duct	FXDQ-PBVE(T) FXDQ-NBVE(T)	○	○	○	○	○	○	○	○	○	○	○	○	○	○	○
	Ceiling Mounted Cassette Corner	FXKQ-MAVE	○	○	○	○	○	○	○	○	○	○	○	○	○	○	○
	Ceiling Mounted Cassette <Double Flow>	FXCQ-MVE	○	○	○	○	○	○	○	○	○	○	○	○	○	○	○
	Ceiling Suspended Cassette	FXUQ-AVEB	○	○	○	○	○	○	○	○	○	○	○	○	○	○	○
	Ceiling Mounted Cassette <Compact Multi Flow>	FXZQ-MVE	○	○	○	○	○	○	○	○	○	○	○	○	○	○	○
	Ceiling Mounted Cassette <Round Flow>	FXFQ-LUV1	○	○	○	○	○	○	○	○	○	○	○	○	○	○	○
	Ceiling Mounted Cassette <Round Flow>	FXFQ-PVE	○	○	○	○	○	○	○	○	○	○	○	○	○	○	○
	Ceiling Mounted Cassette <Round Flow with Sensing>	FXFQ-SVM	○	○	○	○	○	○	○	○	○	○	○	○	○	○	○
			KRP4A92	DCS601C51	DCS601A52	DCM601A51	DCM601A52	DCM002A51	DCM008A51	DEC101A51	DEC102A51	DMS502B51	DAM411B51	DAM412B51	DMS504B51	DTA116A51	DCS302A52
			Mounting Plate for DIII-NET Expander Adaptor	intelligent Touch Controller		intelligent Touch Manager				Di Unit	Dio Unit	Interface for use in BACnet®	Optional DIII Board	Optional Di Board	Interface for Use in LonWorks®	Home Automation Interface Adaptor	Unification Adaptor for Computerized Control

1.2 Indoor Units

		Page	516	526	530	593	608	616	643	644	605	648	648	534	538	596	606	522	541	541	599	620	544	524	544	549	549	553	556	602	727	727	559
VRV II	Outdoor Air Processing Unit	FXM-MFV1	I	I	I	I	I	I	I	I	I	I	I	I	I	I	I	I	I	I	I	I	I	I	I	I	I	I	I	I	I	I	I
	Concealed Floor Standing	FXL-LVE FXN-LVE	I	I	I	I	I	I	I	I	I	I	I	I	I	I	I	I	I	I	I	I	I	I	I	I	I	I	I	I	I	I	I
	Floor Standing	FXA-LVE	I	I	I	I	I	I	I	I	I	I	I	I	I	I	I	I	I	I	I	I	I	I	I	I	I	I	I	I	I	I	I
	Ceiling Suspended	FXH-LVE	I	I	I	I	I	I	I	I	I	I	I	I	I	I	I	I	I	I	I	I	I	I	I	I	I	I	I	I	I	I	I
	Ceiling Mounted Duct	FXM-LVE	I	I	I	I	I	I	I	I	I	I	I	I	I	I	I	I	I	I	I	I	I	I	I	I	I	I	I	I	I	I	I
	Ceiling Mounted Built–in with Rear Suction	FXYB-KV1	I	I	I	I	I	I	I	I	I	○	○	I	I	I	I	I	I	I	I	I	I	I	I	I	I	I	I	I	I	I	I
	Ceiling Mounted Built–in	FXS-LVE	I	I	I	I	I	I	I	○	I	○	○	I	I	I	I	I	I	I	I	I	I	I	I	I	I	I	I	I	I	I	I
	Ceiling Mounted Duct <Low Silhouette>	FXYD-KAVE	I	I	I	I	I	I	○	I	I	I	I	I	I	I	I	I	I	I	I	I	I	I	I	I	I	I	I	I	I	I	I
	Slim Ceiling Mounted Duct	FXD-PVE(T) FXD-MVE(T)	I	I	I	I	I	I	I	I	I	I	I	I	I	I	I	I	I	I	I	I	I	I	I	I	I	I	I	I	I	I	I
	Ceiling Mounted Cassette Corner	FXK-LVE	I	I	I	I	I	○	I	I	I	I	I	I	I	I	I	I	I	I	I	○	I	I	I	I	I	I	I	I	I	I	I
	Ceiling Mounted Cassette <Double Flow>	FXC-LVE	I	I	I	I	○	I	I	I	I	I	I	I	I	I	I	I	I	I	I	I	I	I	I	I	I	I	I	I	I	I	I
	Ceiling Mounted Cassette <Multi Flow>	FXF-LVE	I	I	○	I	I	I	I	I	I	I	I	I	○	I	I	I	I	○	I	I	I	I	I	○	○	I	○	I	I	I	○
VRV III / *VRV* IV	Outdoor Air Processing Unit	FXMQ-MFV1	I	I	I	I	I	I	I	I	I	I	I	I	I	I	I	I	I	I	I	I	I	I	I	I	I	I	I	I	I	I	I
	Ceiling Concealed (Duct)	FXDYQ-M(A)	I	I	I	I	I	I	I	I	I	I	I	I	I	I	I	I	I	I	I	I	I	I	I	I	I	I	I	I	I	I	I
	Ceiling Mounted Built–in	FXSYQ-M	I	I	I	I	I	I	I	○	I	○	○	I	I	I	I	I	I	I	I	I	I	I	I	I	I	I	I	I	I	I	I
	Floor Standing	FXVQ-MY1(6)	I	I	I	I	I	I	I	I	I	I	I	I	I	I	I	I	I	I	I	I	I	I	I	I	I	I	I	I	○	○	I
	Floor Standing / Concealed Floor Standing	FXLQ-MAVE FXNQ-MAVE	I	I	I	I	I	I	I	I	I	I	I	I	I	I	I	I	I	I	I	I	I	I	I	I	I	I	I	I	I	I	I
	Wall Mounted	FXAQ-PVE	I	I	I	I	I	I	I	I	I	I	I	I	I	I	I	I	I	I	I	I	I	I	I	I	I	I	I	I	I	I	I
	Ceiling Suspended	FXHQ-MAVE	I	I	I	I	I	I	I	I	I	I	I	I	I	I	I	I	I	I	I	I	I	I	I	I	I	I	I	I	I	I	I
	Ceiling Mounted Duct	FXMQ-MAVE	I	I	I	I	I	I	I	I	I	I	I	I	I	I	I	I	I	I	I	I	I	I	I	I	I	I	I	I	I	I	I
		FXMQ-PVE	I	I	I	I	I	I	I	I	I	○	○	I	I	I	I	I	I	I	I	I	I	I	I	I	I	I	I	I	I	I	I
	Slim Ceiling Mounted Duct	FXDQ-PBVE(T) FXDQ-NBVE(T)	I	I	I	I	I	I	I	I	I	I	I	I	I	I	I	I	I	I	I	I	I	I	I	I	I	I	I	I	I	I	I
	Ceiling Mounted Cassette Corner	FXKQ-MAVE	I	I	I	I	I	○	I	I	I	I	I	I	I	I	I	I	I	I	I	○	I	I	I	I	I	I	I	I	I	I	I
	Ceiling Mounted Cassette <Double Flow>	FXCQ-MVE	I	I	I	I	○	I	I	I	I	I	I	I	I	I	I	I	I	I	I	I	I	I	I	I	I	I	I	I	I	I	I
	Ceiling Suspended Cassette	FXUQ-AVEB	I	I	I	I	I	I	I	I	○	I	I	I	I	I	○	I	I	I	I	I	I	I	I	I	I	I	I	I	I	I	I
	Ceiling Mounted Cassette <Compact Multi Flow>	FXZQ-MVE	I	I	I	○	I	I	I	I	I	I	I	I	I	○	I	I	I	I	○	I	I	I	I	I	I	I	I	○	I	I	I
	Ceiling Mounted Cassette <Round Flow>	FXFQ-LUV1	I	○	I	I	I	I	I	I	I	I	I	○	I	I	I	I	○	I	I	I	○	I	○	I	I	○	I	I	I	I	○
	Ceiling Mounted Cassette <Round Flow>	FXFQ-PVE	I	○	I	I	I	I	I	I	I	I	I	○	I	I	I	I	○	I	I	I	○	I	○	I	I	○	I	I	I	I	○
	Ceiling Mounted Cassette <Round Flow with Sensing>	FXFQ-SVM	○	I	I	I	I	I	I	I	I	I	I	I	I	I	I	○	○	I	I	I	I	○	○	I	I	○	I	I	I	I	I
			BYCQ125B-W1	BYCP125K-W1	BYCP125D-W1	BYFQ60B8W1	BYBC32-125G-W1	BYK45/71FJW1	KDGF19A45/71	BYBS32-125DJW1	KDBTP49B140	KTBJ25K36W	KTB25KA56-160W	KDBH55K160F	KDBH55D160W	KDBH44BA60	KDBHP49B140	KDBHQ55B140	KDBP55H160FA	KDBP55H160WA	KDBQ44BA60A	KPBJ52F56/80W	KDDP55B160	KDDQ55B140	KDDP55B160K	KDD55DA160	KDD55DA160K	KDDP55X160	KDDJ55XA160	KDDQ44XA60	KD106D10	KDFJ906A560	KKSJ55KA160
			Decoration panel									Service access panel		Sealing material of air discharge outlet					Panel spacer				Fresh air intake kit (Chamber type)					Fresh air intake kit (Direct installation type)			Fresh air intake kit		Chamber connection kit

			Page	560	562	642	651	662	564	564	567	567	611	611	667	667	667	667	679	679	680	680	680	680	680	680	726	726	570	570	571	574	614	668	668	682	688	688	685
VRV II	Outdoor Air Processing Unit	FXM-MFV1		I	I	I	I	I	I	I	I	I	I	I	I	I	I	I	I	I	○	○	○	○	I	I	I	I	I	I	I	I	I	I	I	I	I	○	○	I
VRV II	Concealed Floor Standing	FXL-LVE FXN-LVE		I	I	I	I	I	I	I	I	I	I	I	I	I	I	I	I	I	I	I	I	I	I	I	I	I	I	I	I	I	I	I	I	I	I	I	I	I
VRV II	Floor Standing	FXA-LVE		I	I	I	I	I	I	I	I	I	I	I	I	I	I	I	I	I	I	I	I	I	I	I	I	I	I	I	I	I	I	I	I	I	I	I	I	I
VRV II	Ceiling Suspended	FXH-LVE		I	I	I	I	I	I	I	I	I	I	I	I	I	I	I	I	I	I	I	I	I	I	I	I	I	I	I	I	I	I	I	I	I	I	I	I	I
VRV II	Ceiling Mounted Duct	FXM-LVE		I	I	I	I	I	I	I	I	I	I	I	I	I	I	I	I	I	I	○*2	I	○*2	○*1	○*1	I	I	I	I	I	I	I	I	I	I	I	○*2	○*1
VRV II	Ceiling Mounted Built–in with Rear Suction	FXYB-KV1		I	I	I	○	○	I	I	I	I	I	I	I	I	I	I	I	I	I	I	I	I	I	I	I	I	I	I	I	I	I	I	I	I	I	I	I	I
VRV II	Ceiling Mounted Built–in	FXS-LVE		I	I	I	○	○	I	I	I	I	I	I	○	○	○	○	I	I	I	I	I	I	I	I	I	I	I	I	I	I	I	I	○	○	I	I	I	I
VRV II	Ceiling Mounted Duct <Low Silhouette>	FXYD-KAVE		I	I	I	I	I	I	I	I	I	I	I	I	I	I	I	I	I	I	I	I	I	I	I	I	I	I	I	I	I	I	I	I	I	I	I	I	I
VRV II	Slim Ceiling Mounted Duct	FXD-PVE(T) FXD-MVE(T)		I	I	○	I	I	I	I	I	I	I	I	I	I	I	I	I	I	I	I	I	I	I	I	I	I	I	I	I	I	I	I	I	I	I	I	I	I
VRV II	Ceiling Mounted Cassette Corner	FXK-LVE		I	I	I	I	I	I	I	I	I	I	I	I	I	I	I	I	I	I	I	I	I	I	I	I	I	I	I	I	I	I	I	I	I	I	I	I	I
VRV II	Ceiling Mounted Cassette <Double Flow>	FXC-LVE		I	I	I	I	I	I	I	I	I	○	○	I	I	I	I	I	I	I	I	I	I	I	I	I	I	I	I	I	I	○	I	I	I	I	I	I	I
VRV II	Ceiling Mounted Cassette <Multi Flow>	FXF-LVE		I	○	I	I	I	I	I	○	○	I	I	I	I	I	I	I	I	I	I	I	I	I	I	I	I	○	○	I	○	I	I	I	I	I	I	I	I
VRV III / *VRV* IV	Outdoor Air Processing Unit	FXMQ-MFV1		I	I	I	I	I	I	I	I	I	I	I	I	I	I	I	I	I	○	○	○	○	I	I	I	I	I	I	I	I	I	I	I	I	I	○	○	I
VRV III / *VRV* IV	Ceiling Concealed (Duct)	FXDYQ-M(A)		I	I	I	I	I	I	I	I	I	I	I	I	I	I	I	I	I	I	I	I	I	I	I	I	I	I	I	I	I	I	I	I	I	I	I	I	I
VRV III / *VRV* IV	Ceiling Mounted Built–in	FXSYQ-M		I	I	I	I	I	I	I	I	I	I	I	○	○	○	○	I	I	I	I	I	I	I	I	I	I	I	I	I	I	I	○	○	I	I	I	I
VRV III / *VRV* IV	Floor Standing	FXVQ-MY1(6)		I	I	I	I	I	I	I	I	I	I	I	I	I	I	I	I	I	I	I	I	I	I	I	○	○	I	I	I	I	I	I	I	I	I	I	I	I
VRV III / *VRV* IV	Floor Standing / Concealed Floor Standing	FXLQ-MAVE FXNQ-MAVE		I	I	I	I	I	I	I	I	I	I	I	I	I	I	I	I	I	I	I	I	I	I	I	I	I	I	I	I	I	I	I	I	I	I	I	I	I
VRV III / *VRV* IV	Wall Mounted	FXAQ-PVE		I	I	I	I	I	I	I	I	I	I	I	I	I	I	I	I	I	I	I	I	I	I	I	I	I	I	I	I	I	I	I	I	I	I	I	I	I
VRV III / *VRV* IV	Ceiling Suspended	FXHQ-MAVE		I	I	I	I	I	I	I	I	I	I	I	I	I	I	I	I	I	I	I	I	I	I	I	I	I	I	I	I	I	I	I	I	I	I	I	I	I
VRV III / *VRV* IV	Ceiling Mounted Duct	FXMQ-MAVE		I	I	I	I	I	I	I	I	I	I	I	I	I	I	I	I	I	I	○	I	○	I	I	I	I	I	I	I	I	I	I	I	I	I	I	○	I
VRV III / *VRV* IV	Ceiling Mounted Duct	FXMQ-PVE		I	I	I	I	I	I	I	I	I	I	I	I	I	I	I	○	○	I	I	I	I	I	I	I	I	I	I	I	I	I	I	I	○	I	I	I	I
VRV III / *VRV* IV	Slim Ceiling Mounted Duct	FXDQ-PBVE(T) FXDQ-NBVE(T)		I	I	○	I	I	I	I	I	I	I	I	I	I	I	I	I	I	I	I	I	I	I	I	I	I	I	I	I	I	I	I	I	I	I	I	I	I
VRV III / *VRV* IV	Ceiling Mounted Cassette Corner	FXKQ-MAVE		I	I	I	I	I	I	I	I	I	I	I	I	I	I	I	I	I	I	I	I	I	I	I	I	I	I	I	I	I	I	I	I	I	I	I	I	I
VRV III / *VRV* IV	Ceiling Mounted Cassette <Double Flow>	FXCQ-MVE		I	I	I	I	I	I	I	I	I	○	○	I	I	I	I	I	I	I	I	I	I	I	I	I	I	I	I	I	I	○	I	I	I	I	I	I	I
VRV III / *VRV* IV	Ceiling Suspended Cassette	FXUQ-AVEB		I	I	I	I	I	I	I	I	I	I	I	I	I	I	I	I	I	I	I	I	I	I	I	I	I	I	I	I	I	I	I	I	I	I	I	I	I
VRV III / *VRV* IV	Ceiling Mounted Cassette <Compact Multi Flow>	FXZQ-MVE		I	I	I	I	I	I	I	I	I	I	I	I	I	I	I	I	I	I	I	I	I	I	I	I	I	I	I	I	I	I	I	I	I	I	I	I	I
VRV III / *VRV* IV	Ceiling Mounted Cassette <Round Flow>	FXFQ-LUV1		○	I	I	I	I	○	○	I	I	I	I	I	I	I	I	I	I	I	I	I	I	I	I	I	I	○	○	○	I	I	I	I	I	I	I	I	I
VRV III / *VRV* IV	Ceiling Mounted Cassette <Round Flow>	FXFQ-PVE		○	I	I	I	I	○	○	I	I	I	I	I	I	I	I	I	I	I	I	I	I	I	I	I	I	○	○	○	I	I	I	I	I	I	I	I	I
VRV III / *VRV* IV	Ceiling Mounted Cassette <Round Flow with Sensing>	FXFQ-SVM		○	I	I	I	I	○	○	I	I	I	I	I	I	I	I	I	I	I	I	I	I	I	I	I	I	○	○	○	I	I	I	I	I	I	I	I	I
				KDTP55K80/160	KDT-55DA80/160	KDT25N32-63	KNM25K32-125V1	KEA25K32-125VE	KAFP556B80/160	KAFP557B80/160	KAF556DA80/160	KAF557DA80/160	KAFJ532G36-160	KAFJ533G36-160	KAFJ252L36	KAFJ253L36	KAF252LA56-160	KAF253LA56-160	KAF372AA36-160	KAF373AA36-160	KAFJ372L140	KAFJ372L280	KAFJ373L140	KAFJ373L280	KAFP372A80/160	KAFP373A80/160	KAF-92A140-560	KAF-93A140-560	KAFP552B80/160	KAFP553B80/160	KDDFP55B160	KDDF55DA160	KDDFJ53G36-160	KAJ25L36D	KAJ25LA56-160D	KDDF37AA36-160	KDJ3705L140	KDJ3705L280	KDDFP37A80/160
	Insulation kit for high humidity																																						
	Natural evaporating pan type humidifier																																						
	Auxiliary electric heater																																						
	High-efficiency filter																																						
	Replacement high-efficiency filter																																						
	Filter chamber (Forbottom suction)																																						

*1. FXM40-125LVE
*2. FXM200/250LVE

		VRV III / VRV IV																		VRV II												Page
		Ceiling Mounted Cassette <Round Flow with Sensing>	Ceiling Mounted Cassette <Round Flow>	Ceiling Mounted Cassette <Round Flow>	Ceiling Mounted Cassette <Compact Multi Flow>	Ceiling Suspended Cassette	Ceiling Mounted Cassette <Double Flow>	Ceiling Mounted Cassette Corner	Slim Ceiling Mounted Duct	Ceiling Mounted Duct	Ceiling Suspended	Wall Mounted	Floor Standing / Concealed Floor Standing	Floor Standing	Ceiling Mounted Built–in	Ceiling Concealed (Duct)	Outdoor Air Processing Unit	Ceiling Mounted Cassette <Multi Flow>	Ceiling Mounted Cassette <Double Flow>	Ceiling Mounted Cassette Corner	Slim Ceiling Mounted Duct	Ceiling Mounted Duct <Low Silhouette>	Ceiling Mounted Built–in	Ceiling Mounted Built–in with Rear Suction	Ceiling Mounted Duct	Ceiling Suspended	Floor Standing	Concealed Floor Standing	Outdoor Air Processing Unit		
		FXFQ-SVM	FXFQ-PVE	FXFQ-LUV1	FXZQ-MVE	FXUQ-AVEB	FXCQ-MVE	FXKQ-MAVE	FXDQ-PBVE(T) FXDQ-NBVE(T)	FXMQ-PVE	FXMQ-MAVE	FXHQ-MAVE	FXAQ-PVE	FXLQ-MAVE FXNQ-MAVE	FXVQ-MY1(6)	FXSYQ-M	FXDYQ-M(A)	FXMQ-MFV1	FXF-LVE	FXC-LVE	FXK-LVE	FXD-PVE(T) FXD-MVE(T)	FXYD-KAVE	FXS-LVE	FXYB-KV1	FXM-LVE	FXH-LVE	FXA-LVE	FXL-LVE FXN-LVE	FXM-MFV1	
Filter chamber (For rear suction)	KAJ25L36B	–	–	–	–	–	–	–	–	–	–	–	–	–	–	–	–	–	–	–	–	–	–	○	–	–	–	–	–	–	669
	KAJ25LA56-160B	–	–	–	–	–	–	–	–	–	–	–	–	–	–	–	–	–	–	–	–	–	–	○	–	–	–	–	–	–	669
Filter chamber (For high efficiency filter)	KDDF-92A140-560	–	–	–	–	–	–	–	–	–	–	–	–	–	○	–	–	–	–	–	–	–	–	–	–	–	–	–	–	–	724
	KDDF-93A140-560	–	–	–	–	–	–	–	–	–	–	–	–	–	○	–	–	–	–	–	–	–	–	–	–	–	–	–	–	–	724
Replacement long-life filter	KAFP551K160	○	○	○	–	○	–	–	–	–	–	–	–	–	–	–	–	–	–	–	–	–	–	–	–	–	–	–	–	–	577
	KAF551CA160	–	–	–	–	–	–	–	–	–	–	–	–	–	–	–	–	–	○	–	–	–	–	–	–	–	–	–	–	–	578
	KAF-91A140-560	–	–	–	–	–	–	–	–	–	–	–	–	–	○	–	–	–	–	–	–	–	–	–	–	–	–	–	–	–	725
	KAFQ441BA60	–	–	–	○	–	–	–	–	–	–	–	–	–	–	–	–	–	–	–	–	–	–	–	–	–	–	–	–	–	604
	KAFJ531G36-160	–	–	–	–	–	○	–	–	–	–	–	–	–	–	–	–	–	–	○	–	–	–	–	–	–	–	–	–	–	615
	KAFJ521F56/80	–	–	–	–	–	–	○	–	–	–	–	–	–	–	–	–	–	–	–	○	–	–	–	–	–	–	–	–	–	625
	KAFJ261M450/560	–	–	–	–	–	–	–	–	–	–	–	–	–	○	–	–	–	–	–	–	–	–	–	–	–	–	–	–	–	723
	KAFJ261L140-280	–	–	–	–	–	–	–	–	–	–	–	–	–	○	–	–	–	–	–	–	–	–	–	–	–	–	–	–	–	723
	KAFJ251K36-160	–	–	–	–	–	–	–	–	–	–	–	–	–	–	○	–	–	–	–	–	–	–	○	–	–	–	–	–	–	673
	KAF371AA36-160	–	–	–	–	–	–	–	–	○	–	–	–	–	–	–	–	–	–	–	–	–	–	–	–	–	–	–	–	–	690
	KAFJ371L140	–	–	–	–	–	–	–	–	–	–	–	–	–	–	–	–	○	–	–	–	–	–	–	–	–	–	–	–	○	691
	KAFJ371L280	–	–	–	–	–	–	–	–	–	○	–	–	–	–	–	–	○	–	–	–	–	–	–	–	○*2	–	–	–	○	691
	KAFP371A80/160	–	–	–	–	–	–	–	–	–	–	–	–	–	–	–	–	–	–	–	–	–	–	–	–	○*1	–	–	–	–	691
	KAF501DA56-112	–	–	–	–	–	–	–	–	–	–	○	–	–	–	–	–	–	–	–	–	–	–	–	–	–	○	–	–	–	703
	KAFJ361K28-71	–	–	–	–	–	–	–	–	–	–	–	–	○	–	–	–	–	–	–	–	–	–	–	–	–	–	–	○	–	722
Replacement long-life filter chamber kit	KAF375AA36-160	–	–	–	–	–	–	–	–	○	–	–	–	–	–	–	–	–	–	–	–	–	–	–	–	–	–	–	–	–	692
Ultra long-life filter	KAFSJ9A400/560	–	–	–	–	–	–	–	–	–	–	–	–	–	○	–	–	–	–	–	–	–	–	–	–	–	–	–	–	–	723
	KAFP55B160	○	○	○	–	–	–	–	–	–	–	–	–	–	–	–	–	–	–	–	–	–	–	–	–	–	–	–	–	–	579
	KAF55DA160	–	–	–	–	–	–	–	–	–	–	–	–	–	–	–	–	–	○	–	–	–	–	–	–	–	–	–	–	–	582
Replacement ultra long-life filter	KAFP55H160H	○	○	○	–	–	–	–	–	–	–	–	–	–	–	–	–	–	–	–	–	–	–	–	–	–	–	–	–	–	585
	KAF55KA160H	–	–	–	–	–	–	–	–	–	–	–	–	–	–	–	–	–	○	–	–	–	–			–	–	–	–	–	586
Branch duct chamber	KDJP55B80/160	○	○	○	–	–	–	–	–	–	–	–	–	–	–	–	–	–	–	–	–	–	–	–	–	–	–	–	–	–	587
	KDP55DA80/160	–	–	–	–	–	–	–	–	–	–	–	–	–	–	–	–	–	○	–	–	–	–	–	–	–	–	–	–	–	590
Air discharge blind panel	KDBJ52F56/80W	–	–	–	–	–	–	○	–	–	–	–	–	–	–	–	–	–	–	–	○	–	–	–	–	–	–	–	–	–	626
Suction grill	KDGF-9A140-560	–	–	–	–	–	–	–	–	–	–	–	–	–	○	–	–	–	–	–	–	–	–	–	–	–	–	–	–	–	725
Air discharge grill	K-HV7/9AW	–	–	–	–	–	–	○	–	–	–	–	–	–	–	–	–	–	–	–	○	–	–	–	–	–	–	–	–	–	633
Discharge grill for plenum side	KD101A10/20	–	–	–	–	–	–	–	–	–	–	–	–	–	○	–	–	–	–	–	–	–	–	–	–	–	–	–	–	–	728
Flexible duct (with shutter)	KFDJ52FA56/80	–	–	–	–	–	–	○	–	–	–	–	–	–	–	–	–	–	–	–	○	–	–	–	–	–	–	–	–	–	634
Air suction canvas	KSA-25K36	–	–	–	–	–	–	–	–	–	–	–	–	–	–	○	–	–	–	–	–	–	–	○	–	–	–	–	–	–	674
	KSA-25KA56-160	–	–	–	–	–	–	–	–	–	–	–	–	–	–	○	–	–	–	–	–	–	–	○	–	–	–	–	–	–	674

*1. FXM40-125LVE
*2. FXM200/250LVE

		Page	675	675	724	676	677	727	726	726	695	698	704	709	712	710	711	728	729	729	729
VRV II	Outdoor Air Processing Unit	FXM-MFV1	I	I	I	I	I	I	I	I	I	I	I	I	I	I	I	I	I	I	I
	Concealed Floor Standing	FXL-LVE FXN-LVE	I	I	I	I	I	I	I	I	I	I	I	I	I	I	I	I	I	I	I
	Floor Standing	FXA-LVE	I	I	I	I	I	I	I	I	I	I	I	I	○	I	I	I	I	I	I
	Ceiling Suspended	FXH-LVE	I	I	I	I	I	I	I	I	I	I	I	○	I	I	○	I	I	I	I
	Ceiling Mounted Duct	FXM-LVE	I	I	I	I	I	I	I	I	○*2	○*1	I	I	I	I	I	I	I	I	I
	Ceiling Mounted Built–in with Rear Suction	FXYB-KV1	I	I	I	I	○	I	I	I	I	I	I	I	I	I	I	I	I	I	I
	Ceiling Mounted Built–in	FXS-LVE	○	○	I	○	○	I	I	I	I	I	I	I	I	I	I	I	I	I	I
	Ceiling Mounted Duct <Low Silhouette>	FXYD-KAVE	I	I	I	I	I	I	I	I	I	I	I	I	I	I	I	I	I	I	I
	Slim Ceiling Mounted Duct	FXD-PVE(T) FXD-MVE(T)	I	I	I	I	I	I	I	I	I	I	I	I	I	I	I	I	I	I	I
	Ceiling Mounted Cassette Corner	FXK-LVE	I	I	I	I	I	I	I	I	I	I	I	I	I	I	I	I	I	I	I
	Ceiling Mounted Cassette <Double Flow>	FXC-LVE	I	I	I	I	I	I	I	I	I	I	I	I	I	I	I	I	I	I	I
	Ceiling Mounted Cassette <Multi Flow>	FXF-LVE	I	I	I	I	I	I	I	I	I	I	I	I	I	I	I	I	I	I	I
VRV III / *VRV* IV	Outdoor Air Processing Unit	FXMQ-MFV1	I	I	I	I	I	I	I	I	○	I	I	I	I	I	I	I	I	I	I
	Ceiling Concealed (Duct)	FXDYQ-M(A)	I	I	I	I	I	I	I	I	I	I	I	I	I	I	I	I	I	I	I
	Ceiling Mounted Built–in	FXSYQ-M	○	○	I	I	I	I	I	I	I	I	I	I	I	I	I	I	I	I	I
	Floor Standing	FXVQ-MY1(6)	I	I	○	I	I	○	○	○	I	I	I	I	I	I	I	○	○	○	○
	Floor Standing / Concealed Floor Standing	FXLQ-MAVE FXNQ-MAVE	I	I	I	I	I	I	I	I	I	I	I	I	I	I	I	I	I	I	I
	Wall Mounted	FXAQ-PVE	I	I	I	I	I	I	I	I	I	I	I	I	○	I	I	I	I	I	I
	Ceiling Suspended	FXHQ-MAVE	I	I	I	I	I	I	I	I	I	I	○	I	I	○	I	I	I	I	I
	Ceiling Mounted Duct	FXMQ-MAVE	I	I	I	I	I	I	I	I	○	I	I	I	I	I	I	I	I	I	I
		FXMQ-PVE	I	I	I	I	○	I	I	I	I	I	I	I	I	I	I	I	I	I	I
	Slim Ceiling Mounted Duct	FXDQ-PBVE(T) FXDQ-NBVE(T)	I	I	I	I	I	I	I	I	I	I	I	I	I	I	I	I	I	I	I
	Ceiling Mounted Cassette Corner	FXKQ-MAVE	I	I	I	I	I	I	I	I	I	I	I	I	I	I	I	I	I	I	I
	Ceiling Mounted Cassette <Double Flow>	FXCQ-MVE	I	I	I	I	I	I	I	I	I	I	I	I	I	I	I	I	I	I	I
	Ceiling Suspended Cassette	FXUQ-AVEB	I	I	I	I	I	I	I	I	I	I	I	I	I	I	I	I	I	I	I
	Ceiling Mounted Cassette <Compact Multi Flow>	FXZQ-MVE	I	I	I	I	I	I	I	I	I	I	I	I	I	I	I	I	I	I	I
	Ceiling Mounted Cassette <Round Flow>	FXFQ-LUV1	I	I	I	I	I	I	I	I	I	I	I	I	I	I	I	I	I	I	I
	Ceiling Mounted Cassette <Round Flow>	FXFQ-PVE	I	I	I	I	I	I	I	I	I	I	I	I	I	I	I	I	I	I	I
	Ceiling Mounted Cassette <Round Flow with Sensing>	FXFQ-SVM	I	I	I	I	I	I	I	I	I	I	I	I	I	I	I	I	I	I	I
			KBBJ25K36	KBBJ25KA56-160	KD-9A140-560	KDJ2507K36-160	KDAJ25K36-140A	KPP5-10JA	KPCJ140/400A	KPC5-15J(A)	KDU30L250VE	KDU-30L125VE	KDU50N60/125VE	KDU50B50-125VE	K-KDU572EVE	KHFP5MA63/160	KHFJ5F50-160	KDFJ905A140-560	K-ABSG1406-1410A	KKWJ9A140/400	KWF1G5-15(P)
			Screening door		Front suction base flange	Air suction flange	Air discharge adaptor	Pulley for plenum chamber	Plenum chamber		Drain pump kit					L-type piping kit (for upward direction)		Rear suction kit	Vibration isolating frame	Wood base	

*1. FXM40-125LVE
*2. FXM200/250LVE

1.3 Outdoor Units

		BS unit	*VRV* IV			*VRV* III							*VRV* II				Page
		BSV4/6Q-P	RXYQ-T	RXQ-T	RHXYQ-A	RXYQ-P(A)	RXQ-PA	RSXQ-P	REYQ-P	RQYQ-P	RXYMQ-P,M RXMQ-P	RWEYQ-P	RXY-M	RX-M	RXYM-M	RXM-M	
Cool/Heat Selector	KRC19-26A	○	○	–	–	○	–	–	–	○	○	○	○	–	○	–	733
Fixing Box	KJB111A	–	–	–	–	○	–	–	–	○	○	○	○	–	○	–	734
RFENET Header	KHRJ26K11H/17H/18H/37H/40H	–	–	–	–	–	–	–	–	–	–	–	○	○	○*1	○*1	735
	KHRP26M22H/33H/72H/73H	–	○	○	–	○	○	○*10	–	○	○*2	○	–	–	–	–	739
	KHRP25M33H/72H/73H	–	–	–	–	–	–	–	○	○	–	○	–	–	–	–	742
REFNET Joint	KHRJ26K11T/17T/18T/37T/40T/75T	–	–	–	–	–	–	–	–	–	–	–	○	○	○*3	○*3	745
	KHRP26A22T/33T/72T/73T	–	○	○	○	○	○	○*11	–	○	○*4	○	–	–	–	–	753
	KHRP25A22T/33T/72T/73T	–	–	–	–	–	–	–	○*5	○	–	○	–	–	–	–	756
Outdoor Unit Multi Connection Piping Kit	BHF22M90/135	–	–	–	–	–	–	–	–	–	–	–	○	○	–	–	759
	BHFP22P100/151	–	○	○	○	○	○	–	–	○	–	–	–	–	–	–	762
	BHFP26P90/136	–	–	–	–	–	–	–	○	–	–	–	–	–	–	–	768
	BHFP22MA56/84, BHFP26MA56/84	–	–	–	–	–	–	–	–	–	–	○	–	–	–	–	780
	BHFP22P36/54C	–	–	–	–	–	–	–	–	○	–	–	–	–	–	–	787
	BHFP26P36/63/84C	–	–	–	–	–	–	–	–	○	–	–	–	–	–	–	791·795·799
Pipe Size Reducer	KHRP26M73TP/73HP	–	○	○	○*14	○	○	–	–	○	–	–	–	–	–	–	803
	KHRJ26K40TP/40HP/75TP/76TP	–	–	–	–	–	–	–	–	–	–	–	○	○	–	–	804
Auxiliary pipe set	KHFP22B8P/10P/12P/16P/18P	–	–	–	–	–	–	○	–	–	–	–	–	–	–	–	805
Closed Pipe Kit	KHFP26A100C	○	–	–	–	–	–	–	–	–	–	–	–	–	–	–	806
Central Drain Pan Kit	KWC26B160(E)/280(E)/450(E)	–	–	–	–	–	–	–	–	–	–	–	○	○	–	–	807
	KWC25C450, KWC26C160(E)/280(E)/450(E)	–	–	–	–	○*6	○*7	○*12	○*8	○*12	–	–	–	–	–	–	809
Central Drain Plug	KKPJ5F180	–	–	–	–	–	–	–	–	–	○	–	–	–	○	○	812
Wire Fixture for Preventing Overturning	K-KYZP15C	–	–	–	–	–	–	–	–	–	○	–	–	–	○	○	813
Fixture for Preventing Overturning	KPT-60B160	–	–	–	–	–	–	–	–	–	○	–	–	–	○	○	815
Refrigerant Pipe Filter Kit	BHF26A450F	–	–	–	–	–	○	–	–	–	–	–	–	○	–	–	816
Digital Pressure Gauge	BHGP26A1(E)	–	–	–	–	○	○*9	○*9	○*9	○*9	–	–	–	–	–	–	819
Strainer Kit	BWU26A15/20	–	–	–	–	–	–	–	–	–	–	○*13	–	–	–	–	821

*1 KHRJ26K11H/18H
*2 KHRP26M22H/33H
*3 KHRJ26K11T/17T
*4 KHRP26A22T
*5 KHRP25A22T/33T
*6 KWC26C160(E)/280(E)/450(E)
*7 KWC26C160/280/450
*8 KWC25C450, KWC26C280/450
*9 BHGP26A1
*10 KHRP26M22H/33H/72H
*11 KHRP26A22T/33T/72T
*12 KWC26C280/450
*13 Accessory exclusively for Y1 models. Contained in the product package for TL and YL models.
*14 KHRP26M73TP

Part 2
Control Systems

1. Remote Controller (Wireless Type) 18
   1.1 BRC7C62 / BRC7C67 (for FXC(Q)) 18
   1.2 BRC7E61W / BRC7E65 (for FXF) 37
   1.3 BRC7F634F / BRC7F635F (for FXFQ-P) 56
   1.4 BRC4C61 / BRC4C62 / BRC4C63 / BRC4C64 (for FXK(Q), FXD, FXDYQ, FXS, FXSYQ, FXM, FXMQ-M(A), FXL(Q), FXN(Q), FXYD, FXYB) 79
   1.5 BRC4C65 / BRC4C66 (for FXDQ and FXMQ-P) 100
   1.6 BRC7EA63W / BRC7EA66 (for FXH(Q)) 120
   1.7 BRC7EA618 / BRC7EA619 (for FXA(Q)) 138
   1.8 BRC7E530W / BRC7E531W (for FXZQ) 161
   1.9 BRC7CB58 / BRC7CB59 (for FXUQ-A) 185
2. Remote Controller (Wired Type) 210
   2.1 BRC1C62 210
3. Navigation Remote Controller (Wired Remote Controller) 215
   3.1 BRC1E62 215
4. Wired Remote Controller with Weekly Schedule Timer 231
   4.1 BRC1D61 231
5. Simplified Remote Controller 238
   5.1 BRC2C51 238
6. Remote Controller for Hotel Use 242
   6.1 BRC3A61 242
7. Adaptor for Wiring 247
   7.1 KRP1B61 247
   7.2 KRP1BA54 / KRP1B56 / KRP1BA57 / KRP1BA59 250
   7.3 KRP1C63 252
   7.4 KRP1C64 254
   7.5 KRP1C67 257
8. Wiring Adaptor for Electrical Appendices (1) (2) 259
   8.1 KRP2A61 / KRP2A62 / KRP2A53 259
   8.2 KRP4AA51 / KRP4AA52 / KRP4AA53 / KRP4A54 270
9. Remote Sensor (For Indoor Temperature) 281
   9.1 KRCS01-1B / KRCS01-4B 281
10. Installation Box for Adaptor PCB 283
   10.1 KRP1H98 283
   10.2 KRP1BA101 287
   10.3 KRP1DA98 292
   10.4 KRP1B96 / KRP4A91 294
   10.5 KRP1B100 295
   10.6 KRP4A96 297
   10.7 KRP4AA93 299
   10.8 KRP1CA93 301
   10.9 KRP1BA97 303
11. External Control Adaptor for Outdoor Unit 305
   11.1 DTA104A61 / DTA104A62 / DTA104A53 305

12. Adaptor for Multi Tenant 314
12.1 DTA114A61 314
13. External Control Adaptor for Cooling / Heating 318
13.1 KRP6A1 318
14. Remote Controller Box with Key 322
14.1 KRCB37-1 322
15. Residential Central Remote Controller 324
15.1 DCS303A51 324
16. Central Remote Controller 335
16.1 DCS302CA61 335
17. Electrical Box with Earth Terminal 366
17.1 KJB212AA / KJB311AA / KJB411A 366
18. Unified ON/OFF Controller 368
18.1 DCS301BA61 368
19. Noise Filter (For Electromagnetic Interface Use only) 376
19.1 KEK26-1A 376
20. Schedule Timer 379
20.1 DST301BA61 379
21. Interface Adaptor for SkyAir Series 397
21.1 DTA112BA51 397
22. Central Control Adaptor Kit 399
22.1 DTA107A55 399
23. Wiring Adaptor for Other Air-Conditioner 403
23.1 DTA103A51 403
24. DIII-NET Expander Adaptor 407
24.1 DTA109A51 407
24.2 KRP4A92 411
25. intelligent Touch Controller 412
25.1 DCS601C51 412
26. intelligent Touch Manager 452
26.1 Features 452
26.2 Troubleshooting 460
26.3 Scalability 461
26.4 Specifications 462
26.5 Functions 463
26.6 Wiring Example for intelligent Touch Manager <DCM601A51> 465
26.7 Installation 474
27. Di Unit 477
27.1 DEC101A51 477
28. Dio Unit 480
28.1 DEC102A51 480
29. Interface for use in BACnet® 482
29.1 DMS502B51 482
30. Optional DIII Board 488
30.1 DAM411B51 488
31. Optional Di Board 491
31.1 DAM412B51 491
32. Interface for use in LONWORKS® 494
32.1 DMS504B51 494
33. Home Automation Interface Adaptor 501
33.1 DTA116A51 501

34. Unification Adaptor for Computerized Control.....507
34.1 DCS302A52.....507

1. Remote Controller (Wireless Type)

1.1 BRC7C62 / BRC7C67 (for FXC(Q))

1.1.1 Dimensions

Unit (mm)

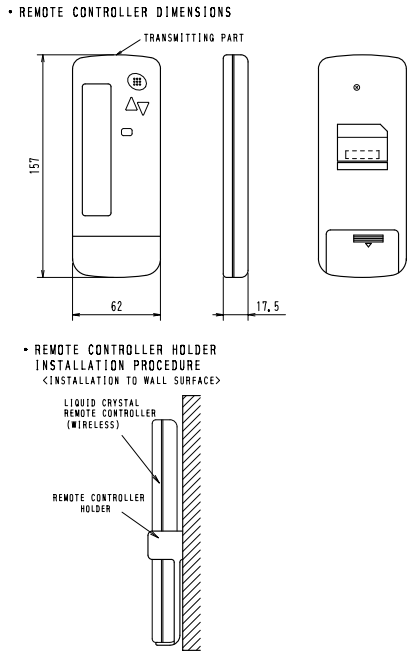

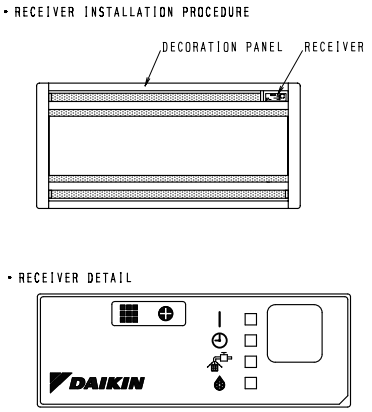

• WIRELESS REMOTE CONTROLLER KIT FOR EACH DECORATION PANEL

WIRELESS REMOTE CONTOROLLER KIT	DECORATON PANEL	
BRC7C62 BRC7C67	BYBC32GJW1	BYBC32G-W1
	BYBC50GJW1	BYBC50G-W1
	BYBC63GJW1	BYBC63G-W1
	BYBC125GJW1	BYBC125G-W1

C: 3D007588A

1.1.2 Operation Manual

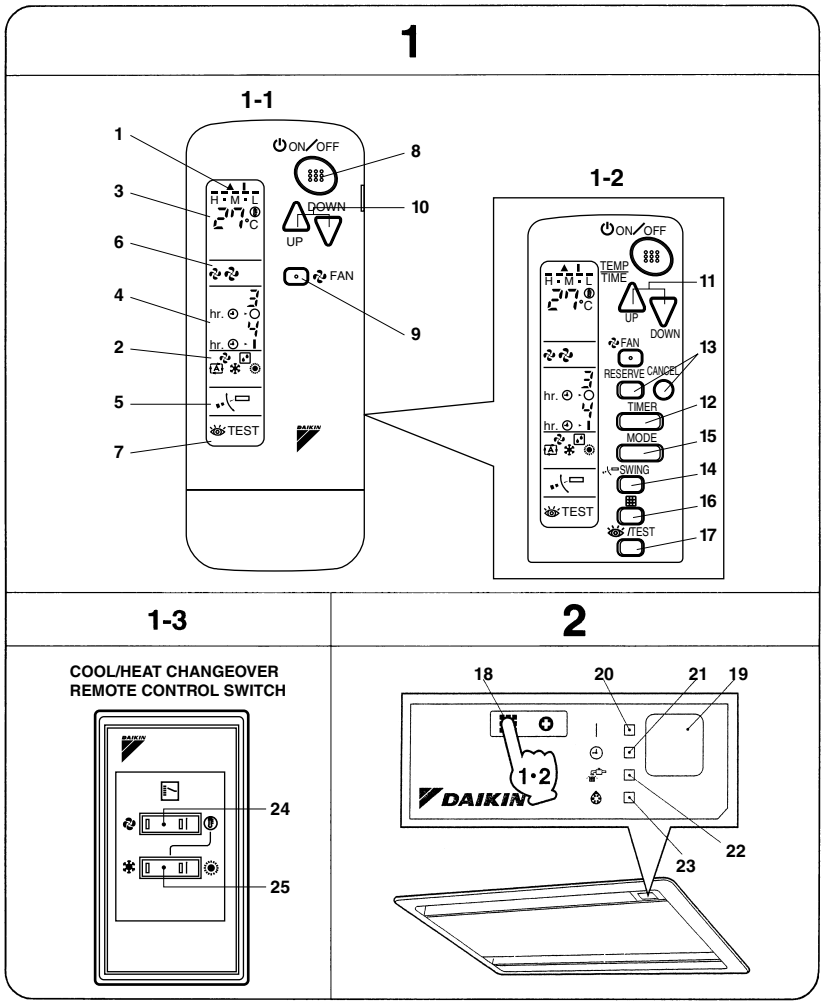

3P107422-22S

3

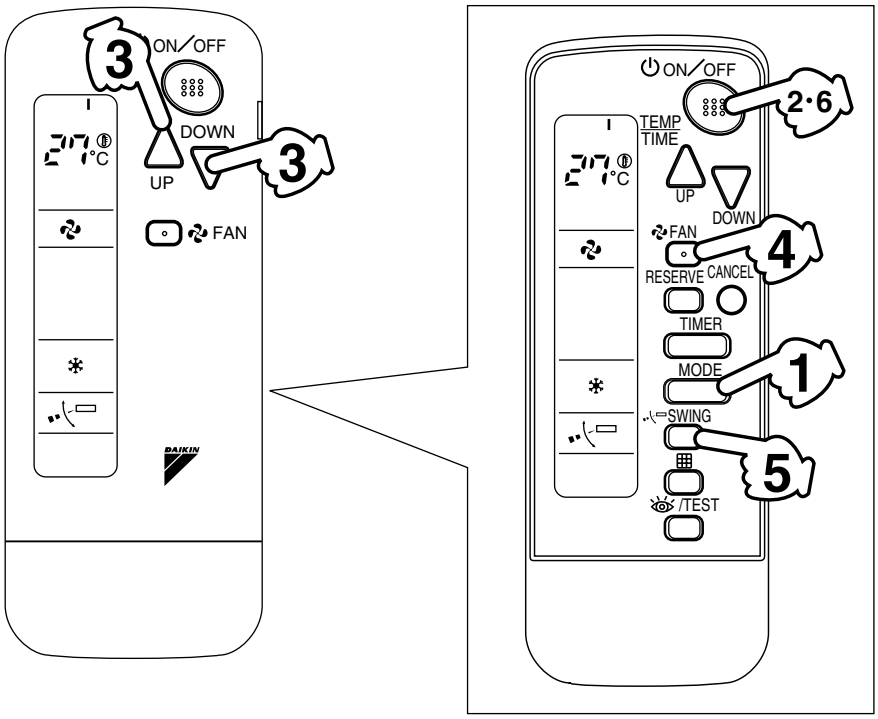

4

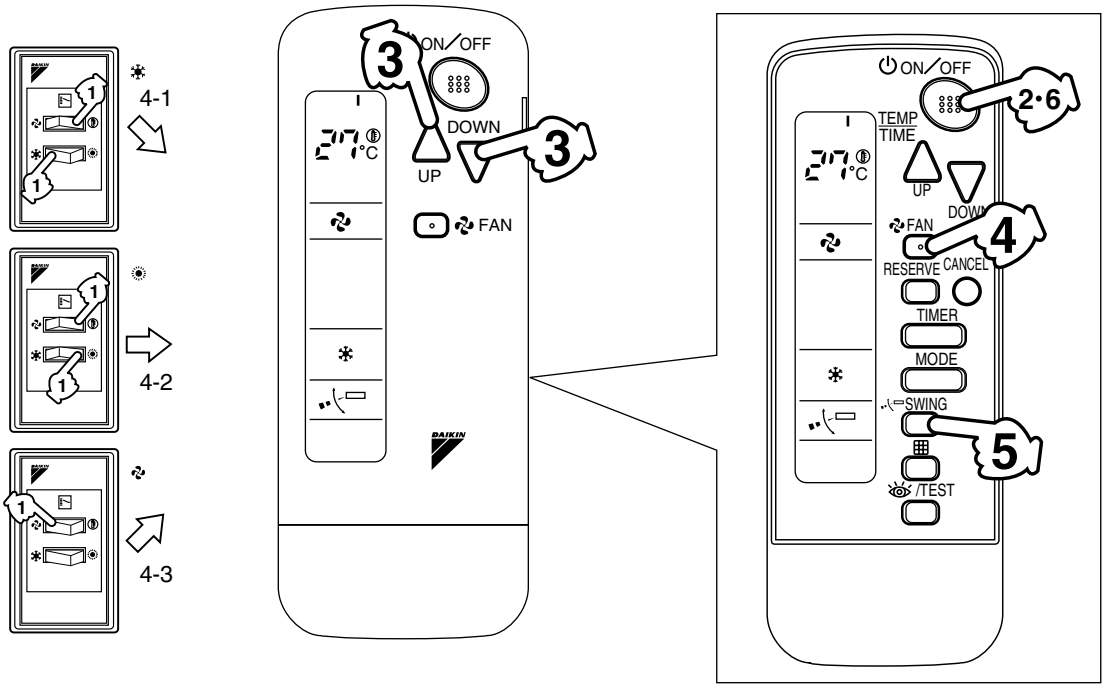

3P107422-22S

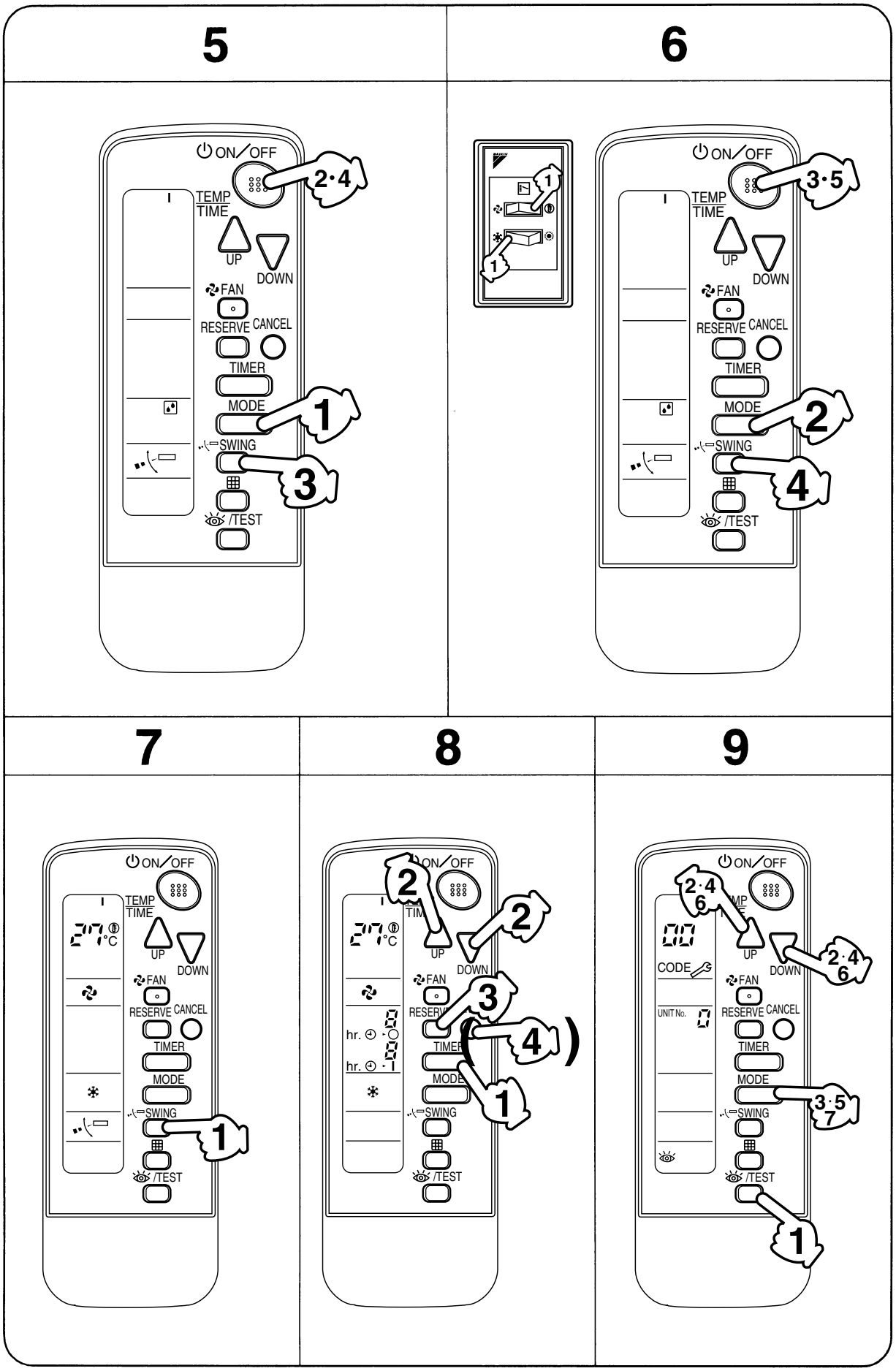

3P107422-22S

2. NAMES AND FUNCTIONS OF THE OPERATING SECTION (Fig. 1, 2)

1	**DISPLAY " ▲ " (SIGNAL TRANSMISSION)**
	This lights up when a signal is being transmitted.
2	**DISPLAY " " " " " " " " " " (OPERATION MODE)**
	This display shows the current OPERATION MODE. For straight cooling type, " " (Auto) and " " (Heating) are not installed.
3	**DISPLAY " " (SET TEMPERATURE)**
	This display shows the set temperature.
4	**DISPLAY " " (PROGRAMMED TIME)**
	This display shows PROGRAMMED TIME of the system start or stop.
5	**DISPLAY " " (AIR FLOW FLAP)**
	Refer to Note 1.
6	**DISPLAY " " " " (FAN SPEED)**
	The display shows the set fan speed.
7	**DISPLAY " TEST " (INSPECTION/TEST OPERATION)**
	When the INSPECTION/TEST OPERATION BUTTON is pressed, the display shows the system mode is in.
8	**ON/OFF BUTTON**
	Press the button and the system will start. Press the button again and the system will stop.
9	**FAN SPEED CONTROL BUTTON**
	Press this button to select the fan speed, HIGH or LOW, of your choice.
10	**TEMPERATURE SETTING BUTTON**
	Use this button for SETTING TEMPERATURE (Operates with the front cover of the remote controller closed.)
11	**PROGRAMMING TIMER BUTTON**
	Use this button for programming "START and/or STOP" time. (Operates with the front cover of the remote controller opened.)
12	**TIMER MODE START/STOP BUTTON**
	Refer to Note 2.
13	**TIMER RESERVE/CANCEL BUTTON**
	Refer to Note 3.
14	**AIR FLOW DIRECTION ADJUST BUTTON**
	Refer to Note 4.
15	**OPERATION MODE SELECTOR BUTTON**
	Press this button to select OPERATION MODE.
16	**FILTER SIGN RESET BUTTON**
	Refer to the section of MAINTENANCE in the operation manual attached to the indoor unit.
17	**INSPECTION/TEST OPERATION BUTTON**
	This button is used only by qualified service persons for maintenance purposes.
18	**EMERGENCY OPERATION SWITCH**
	This switch is readily used if the remote controller does not work.
19	**RECEIVER**
	This receives the signals from the remote controller.
20	**OPERATING INDICATOR LAMP (Red)**
	This lamp stays lit while the air conditioner runs. It flashes when the unit is in trouble.
21	**TIMER INDICATOR LAMP (Green)**
	This lamp stays lit while the timer is set.
22	**AIR FILTER CLEANING TIME INDICATOR LAMP (Red)**
	Lights up when it is time to clean the air filter.
23	**DEFROST LAMP (Orange)**
	Lights up when the defrosting operation has started. (For straight cooling type this lamp does not turn on.)

3P107422-22S

Note 1 : page 26, Note 2 : page 26, Note 3 : page 26, Note 4 : page 26

24	**FAN/AIR CONDITIONING SELECTOR SWITCH**
	Set the switch to " " (FAN) for FAN and " " (A/C) for HEAT or COOL.
25	**COOL/HEAT CHANGEOVER SWITCH**
	Set the switch to " " (COOL) for COOL and " " (HEAT) for HEAT.

NOTES

- For the sake of explanation, all indications are shown on the display in Figure 1 contrary to actual running situations.
- Fig. 1-2 shows the remote controller with the front cover opened.
- Fig. 1-3 shows this remote controller can be used in conjunction with the one provided with the *VRV* system.
- If the air filter cleaning time indicator lamp lights up, clean the air filter as explained in the operation manual provided with the indoor unit.
  After cleaning and reinstalling the air filter, press the filter sign reset button on the remote controller. The air filter cleaning time indicator lamp on the receiver will go out.

3. HANDLING FOR WIRELESS REMOTE CONTROLLER

Precautions in handling remote controller

Direct the transmitting part of the remote controller to the receiving part of the air conditioner.

If something blocks the transmitting and receiving path of the indoor unit and the remote controller as curtains, it will not operate.

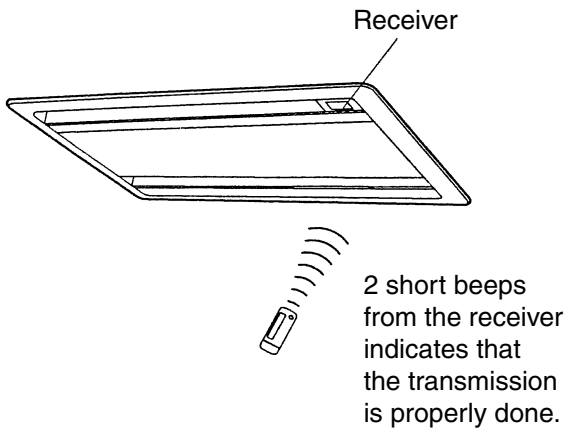

Transmitting distance is approximately 7 m.

Do not drop or get it wet.

It may be damaged.

Never press the button of the remote controller with a hard, pointed object.

The remote controller may be damaged.

Installation site

- It is possible that signals will not be received in rooms that have electronic fluorescent lighting. Please consult with the salesman before buying new fluorescent lights.
- If the remote controller operated some other electrical apparatus, move that machine away or consult your dealer.

3P107422-22S

Placing the remote controller in the remote controller holder
Install the remote controller holder to a wall or a pillar with the attached screw. (Make sure it transmits)

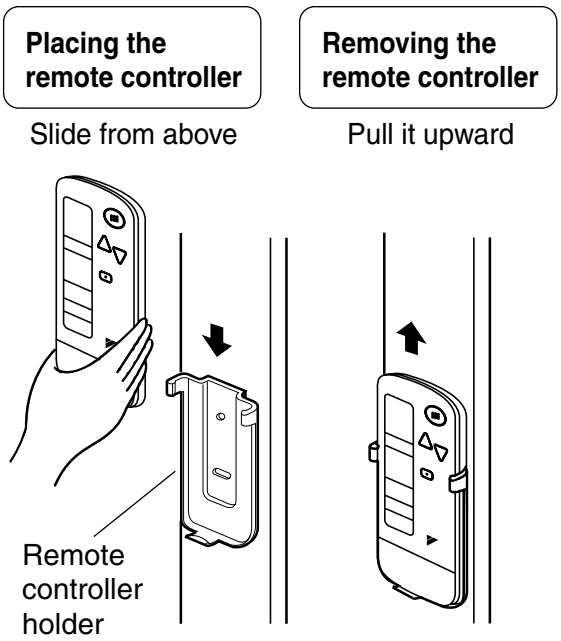

How to put the dry batteries

(1) Remove the back cover of the remote controller to the direction pointed by the arrow mark.

(2) Put in batteries.
Use two dry cell batteries (AAA.LR03 (alkaline)). Put dry batteries correctly to fit their (+) and (–).

(3) Close the cover

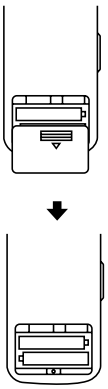

— When to change batteries
Under normal use, batteries last about a year. However, change them whenever the indoor unit doesn't respond or responds slowly to commands, or if the display becomes dark.

[CAUTIONS]

- Replace all batteries at the same time, do not use new and old batteries intermixed.
- In case the remote controller is not used for a long time, take out all batteries in order to prevent liquid leak of the battery.

IN THE CASE OF CENTRALIZED CONTROL SYSTEM
If the indoor unit is under centralized control, it is necessary to switch the remote controller's setting.
In this case, contact your DAIKIN dealer.

4. OPERATION PROCEDURE

- Operating procedure varies with heat pump type and straight cooling type. Contact your Daikin dealer to confirm your system type.
- To protect the unit, turn on the main power switch 6 hours before operation.
- If the main power supply is turned off during operation, operation will restart automatically after the power turns back on again.

COOLING, HEATING, AUTOMATIC AND FAN OPERATION (Fig. 3, 4)

- AUTOMATIC OPERATION can be selected only by Heat recovery system.
- Cooling only system give selection of FAN or COOLING OPERATION only.

⟨⟨FOR SYSTEMS WITHOUT COOL/HEAT CHANGEOVER REMOTE CONTROL SWITCH (Fig. 3)⟩⟩

1 Press OPERATION MODE SELECTOR button several times and select the OPERATION MODE of your choice as follows.

- COOLING OPERATION ..... " ❄ "
- HEATING OPERATION ..... " ☀ "
- AUTOMATIC OPERATION ..... " A "
- FAN OPERATION..... " ✿ "

3P107422-22S

On AUTOMATIC OPERATION

In this operation mode, COOL/HEAT changeover is automatically conducted at a present indoor temperature.

2 Press ON/OFF button.

OPERATION lamp lights up and the system starts OPERATION.

《FOR SYSTEMS WITH COOL/HEAT CHANGEOVER REMOTE CONTROL SWITCH (Fig. 4)》

1 Select OPERATION MODE with the COOL/HEAT CHANGEOVER REMOTE CONTROL SWITCH as follows.

■ COOING OPERATION .....
Refer to fig. 4-1 (,)

■ HEATING OPERATION .....
Refer to fig. 4-2 (,)

■ FAN OPERATION .....
Refer to fig. 4-3 ( )

2 Press ON/OFF button.

OPERATION lamp lights up and the system starts OPERATION.

ADJUSTMENT

For programming TEMPERATURE and FAN SPEED and AIR FLOW DIRECTION, follow the procedure shown below.

3 Press TEMPERATURE SETTING button and program the setting temperature.

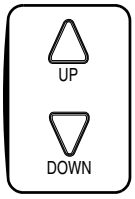

Each time this button is pressed, setting temperature rises 1°C.

Each time this button is pressed, setting temperature lowers 1°C.

In case of automatic operation

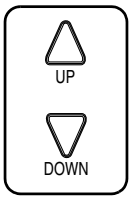

Each time this button is pressed, setting temperature shifts to “H” side.

Each time this button is pressed, setting temperature shifts to “L” side.

[°C]

	H	•	M	•	L
Setting temperature	25	23	22	21	19

Note:

- The setting is impossible for fan operation.

4 Press FAN SPEED CONTROL button.

High or Low fan speed can be selected.

5 Press AIR FLOW DIRECTION button.

Refer to “ADJUSTING THE AIR FLOW DIRECTION” (Note) for details.

STOPPING THE SYSTEM

6 Press ON/OFF button once again.

OPERATION lamp goes off, and the system stops OPERATION.

NOTE

- Do not turn OFF power immediately after the unit stops. Then, wait no less than 5 minutes. Water is leaking or there is something else wrong with the unit.

[EXPLANATION OF HEATING OPERATION]

DEFROST OPERATION

- As the frost on the coil of an outdoor unit increase, heating effect decreases and the system goes into DEFROST OPERATION.
- The fan operation stops and the DEFROST lamp of the indoor unit goes on. After 6 to 8 minutes (maximum 10 minutes) of DEFROST OPERATION, the system returns to HEATING OPERATION.

Heating capacity & Outdoor air temperature

- Heating capacity drops as outdoor air temperature lowers. If feeling cold, use another heater at the same time as this air conditioner.

Note : page 26

3P107422-22S

- Hot air is circulated to warm the room. It will take some time from when the air conditioner is first started until the entire room becomes warm. The internal fan automatically turns at low speed until the air conditioner reaches a certain temperature on the inside. In this situation, all you can do is wait.
- If hot air accumulates on the ceiling and feet are left feeling cold, it is recommended to use a circulator. For details, contact the place of purchase.

PROGRAM DRY OPERATION (Fig. 5, 6)

- The function of this program is to decrease the humidity in your room with the minimum temperature decrease.
- Micro computer automatically determines TEMPERATURE and FAN SPEED.
- This system does not go into operation if the room temperature is below 16°C.

⟨⟨FOR SYSTEMS WITHOUT COOL/HEAT CHANGEOVER REMOTE CONTROL SWITCH (Fig. 5)⟩⟩

1 Press OPERATION MODE SELECTOR button several times and select "" (PROGRAM DRY OPERATION).

2 Press ON/OFF button.

OPERATION lamp lights up and system starts OPERATION.

ADJUSTMENT

3 Press AIR FLOW DIRECTION ADJUST button.

Refer to "ADJUSTING THE AIR FLOW DIRECTION" (Note) for details.

STOPPING THE SYSTEM

4 Press ON/OFF button again.

OPERATION lamp goes off, and the system stops OPERATION.

NOTE

- Do not turn OFF power immediately after the unit stops. Then, wait no less than 5 minutes. Water is leaking or there is something else wrong with the unit.

⟨⟨FOR SYSTEMS WITH COOL/HEAT CHANGEOVER REMOTE CONTROL SWITCH (Fig. 6)⟩⟩

1 Select COOLING OPERATION MODE with the COOL/HEAT CHANGEOVER REMOTE CONTROL SWITCH.

2 Press OPERATION MODE SELECTOR button several times and select PROGRAM DRY "".

3 Press ON/OFF button.

OPERATION lamp lights up and the system starts.

4 Press AIR FLOW DIRECTION ADJUST button.

Refer to "ADJUSTING THE AIR FLOW DIRECTION" (Note) for details.

STOPPING THE SYSTEM

5 Press ON/OFF button once again.

OPERATION lamp goes off, and the system stops OPERATION.

NOTE

- Do not turn OFF power immediately after the unit stops. Then, wait no less than 5 minutes. Water is leaking or there is something else wrong with the unit.

Note : page 26

3P107422-22S

ADJUSTING THE AIR FLOW DIRECTION (Fig. 7)

Press the AIR FLOW DIRECTION ADJUST button to adjust up/down air flow angle.

1 Press the AIR FLOW DIRECTION ADJUST button to select the air direction as shown below.

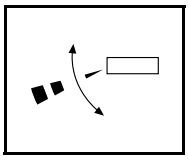

DISPLAY appears and the air flow direction continuously varies. (Automatic swing setting)

Press AIR FLOW DIRECTION ADJUST button to select the air direction of your choice.

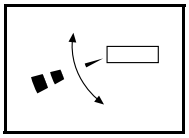

DISPLAY vanishes and the desired air flow direction is fixed. (Fixed air flow setting)

- The movable limit of the blade is changeable. Contact your Daikin dealer for details.

MOVEMENT OF THE AIR FLOW FLAP

For the following conditions, micro computer controls the air flow direction so it may be different from the display.

Operation mode	Cooling	Heating
Operation conditions	• When room temperature is lower than the set temperature	• When room temperature is higher than the set temperature • At defrost operation
	• When operating continuously at horizontal air flow direction	

Operation mode includes automatic operation.

PROGRAM TIMER OPERATION (Fig. 8)

- The timer is operated by the following two ways.
  Programming the stop time (◷ ▸◯)
  ....The system stops operating after the time setting has elapsed.
  Programming the start time (◷ ▸ |)
  .... The system starts operating after the time setting has elapsed.
- The timer can be programmed for a maximum of 72 hours.
- The start and the stop time can simultaneously be programmed.

1 Press the TIMER MODE START/STOP button several times and select the mode on the display.

The display flashes.
For setting the timer stop.....“◷ ▸◯”
For setting the timer start .....“◷ ▸ | ”

2 Press the PROGRAMMING TIMER button and set the time for stopping or starting the system.

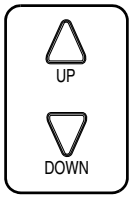

When this button is pressed, the time advances by 1 hour.

When this button is pressed, the time goes backward by 1 hour.

3 Press RESERVE button.

The timer setting procedure ends.
The display or changes from flashing light to a constant light.

NOTE

- When setting the timer Off and On at the same time, repeat the above procedure from 1 to 3 once again.

3P107422-22S

For example.

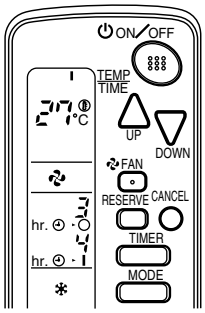

When the timer is programmed to stop the system after 3 hours and start the system after 4 hours, the system will stop after 3 hours and then 1 hour later the system will start.

- After the timer is programmed, the display shows the remaining time.
- Press the TIMER OFF button to cancel programming. The display vanishes. (☞4)

HOW TO SET MASTER REMOTE CONTROLLER (For *VRV* system)

- When the system is installed as shown below, it is necessary to designate the master remote controller.

⟨⟨For Heat pump system⟩⟩

When one outdoor unit is connected with several indoor units.

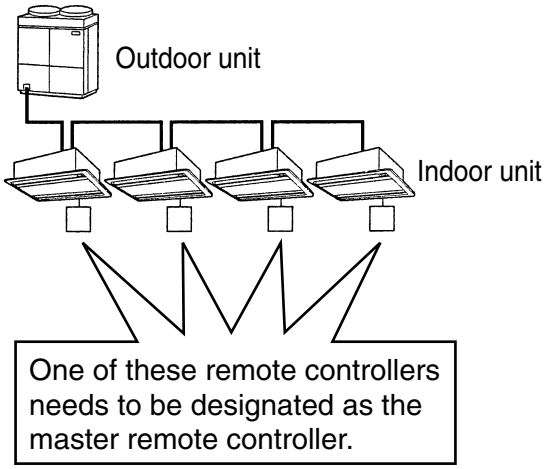

⟨⟨For Heat recovery system⟩⟩

When one BS unit is connected with several indoor units.

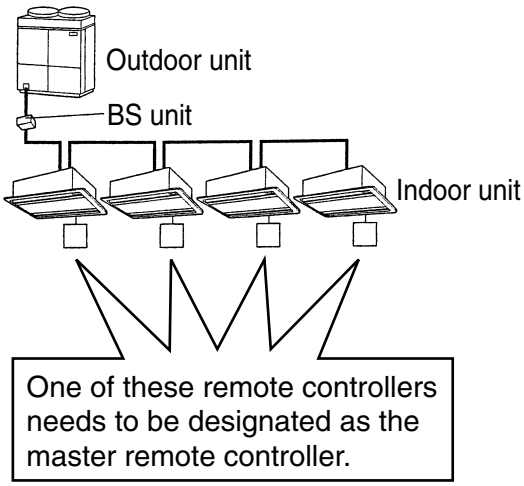

- Only the master remote controller can select HEATING, COOLING or AUTOMATIC (only Heat recovery system) OPERATION.

When the indoor unit with master remote controller is set to “COOL”, you can switch over operation mode between “FAN”, “DRY” and “COOL”.
When the indoor unit with master remote controller is set to “HEAT”, you can switch over operation mode between “FAN” and “HEAT”.
When the indoor unit with master remote controller is set to “FAN”, you cannot switch operation mode.
When attempting settings than that consented above, a “peep” is emitted as a warning.
Only with Heat recovery system, you can set the indoor unit to AUTOMATIC. Attempting to do so, a “peep” will be emitted as a warning.

3P107422-22S

How to designate the master remote controller

1 Continuously press the OPERATION MODE SELECTOR button for 4 seconds.

The displays showing "⊖" of all slave indoor unit connected to the same outdoor unit or BS unit flash.

2 Press the OPERATION MODE SELECTOR button to the indoor unit that you wish to designate as the master remote controller. Then designation is completed. This indoor unit is designated as the master remote controller and the display showing "⊖" vanishes.

- To change settings, repeat steps 1 and 2.

EMERGENCY OPERATION

When the remote controller does not work due to battery failure or the absence thereof, use this switch which is located beside the discharge grille on the main unit. When the remote controller does not work, but the battery low indicator on it is not lit, contact your dealer.

[START]

1 Press the EMERGENCY OPERATION switch.

The machine runs in the previous mode. The system operates with the previously set air flow rate.

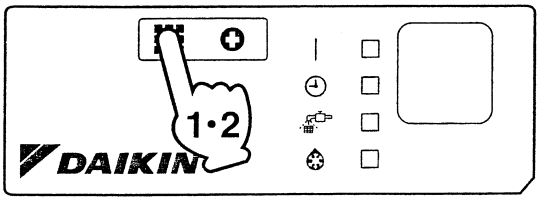

[STOP]

2 Press the EMERGENCY OPERATION switch again.

PRECAUTIONS FOR GROUP CONTROL SYSTEM OR TWO REMOTE CONTROLLER CONTROL SYSTEM

This system provides two other control systems beside individual control (one remote controller controls one indoor unit) system. Confirm the following if your unit is of the following control system type.

- **Group control system**
  One remote controller controls up to 16 indoor units.
  All indoor units are equally set.
- **Two remote controller control system**
  Two remote controllers control one indoor unit. (In case of group control system, one group of indoor units)
  The unit follows individual operation.

NOTES

- Cannot have two remote controllers control system with only wireless remote controllers. (It will be a two remote controller control system having one wired and one wireless remote controllers.)
- Under two remote controller control system, wireless remote controller cannot control timer operation.
- Only the operating indicator lamp out of 3 other lamps on the indoor unit display functions.

NOTE

Contact your Daikin dealer in case of changing the combination or setting of group control and two remote controller control systems.

3P107422-22S

5. NOT MALFUNCTION OF THE AIR CONDITIONER

The following symptoms do not indicate air conditioner malfunction

I. THE SYSTEM DOES NOT OPERATE

- **The system does not restart immediately after the ON/OFF button is pressed.**
  If the OPERATION lamp lights, the system is in normal condition. It does not restart immediately because a safety device operates to prevent overload of the system. After 3 minutes, the system will turn on again automatically.
- **The system does not restart immediately when TEMPERATURE SETTING button is returned to the former position after pushing the button.**
  It does not restart immediately because a safety device operates to prevent overload of the system. After 3 minutes, the system will turn on again automatically.
- **If the reception beep is rapidly repeated 3 times (It sounds only twice when operating normally.)**
  Control is set to the optional controller for centralized control.
- **If the defrost lamp on the indoor unit's display is lit when heating is started.**
  This indication is to warn against cold air being blown from the unit. There is nothing wrong with the equipment.

6. HOW TO DIAGNOSE TROUBLE SPOTS (Fig. 9)

I. EMERGENCY STOP

When the air conditioner stops in emergency, the run lamp on the indoor unit starts blinking. Take the following steps yourself to read the malfunction code that appears on the display. Contact your dealer with this code. It will help pinpoint the cause of the trouble, speeding up the repair.

1 Press the INSPECTION/TEST button to select the inspection mode " 0 ".

" 0 " appears on display and blinks. "UNIT" lights up.

2 Press PROGRAMMING TIMER BUTTON and change the unit number.

Press to change the unit number until the indoor unit beeps and perform the following operation according to the number of beeps.

Number of beeps

3 short beeps .....Perform all steps from 3 to 6 .

1 short beep .....Perform 3 and 6 steps.

1 long beep .....Normal state

3 Press OPERATION MODE SELECTOR BUTTON.

" 0 " on the left-hand of the malfunction code blinks.

4 Press PROGRAMMING TIMER BUTTON and change the malfunction code.

Press until the indoor unit beeps twice.

5 Press OPERATION MODE SELECTOR BUTTON.

" 0 " on the right-hand of the malfunction code blinks.

6 Press PROGRAMMING TIMER BUTTON and change the malfunction code.

Press until the indoor unit makes a long beep.

The malfunction code is fixed when the indoor unit makes a long beep.

7 Reset of the display.

Press OPERATION MODE SELECTOR BUTTON to get the display back to the normal state.

3P107422-22S

II. IN CASE BESIDES EMERGENCY STOP

1. The unit does not operate at all.

- Check if the receiver is exposed of sunlight or strong light. Keep receiver away from light.
- Check if there are batteries in the remote controller. Place the batteries.
- Check if the indoor unit number and wireless remote controller number are equal.

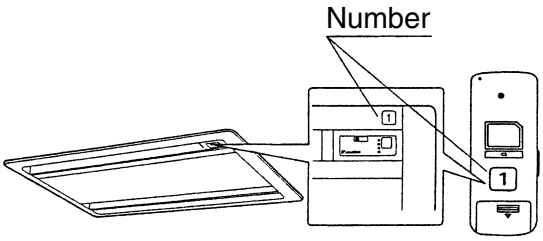

Operate the indoor unit with the remote controller of the same number.
Signal transmitted from a remote controller of a different number cannot be accepted. (If the number is not mentioned, it is considered as “1”)

2. The system operates but it does not sufficiently cool or heat.

- If the set temperature is not proper.
- If the FAN SPEED is set to LOW SPEED.
- If the air flow angle is not proper.

Contact the place of purchase in the following case.

⚠ WARNING

When you detect a burning odor, shut OFF power immediately and contact the place of purchase. Using the equipment in anything but proper working condition can result in equipment damage, electric shock and/or fire.

[Trouble]

The RUN lamp of the indoor unit is flashing and the unit does not work at all.

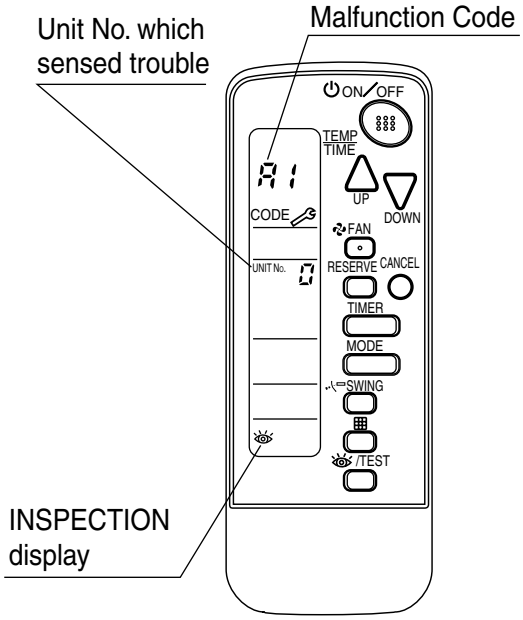

[Remedial action]

Check the malfunction code (A1 ~ UF) on the remote control and contact the place of purchase. (See Note)

Disposal requirements

Batteries supplied with the remote controller are marked with this symbol.
This means that the batteries shall not be mixed with unsorted household waste.
If a chemical symbol is printed beneath the symbol, this chemical symbol means that the battery contains a heavy metal above a certain concentration. Possible chemical symbols are:

■ Pb: lead (>0.004%)

Waste batteries must be treated at a specialized treatment facility for re-use.
By ensuring waste batteries are disposed of correctly, you will help to prevent potential negative consequences for the environment and human health.

Note : page 29

3P107422-22S

1.1.3 Installation Manual

SAFETY CONSIDERATIONS

Please read this "SAFETY CONSIDERATIONS" carefully before installing air conditioning equipment and be sure to install it correctly. After completing the installation, make sure at start up operation that the unit operates properly. Please instruct the customer how to operate the unit and keep maintenance.
Meaning of caution symbols

⚠ **CAUTION** ..... If the caution is not observed, it may cause injury or damage to equipment.
NOTE ..... These instructions will ensure proper use of the equipment.

⚠ CAUTION

- Refer also to the installation manual attached to the indoor unit and the installation manual attached to the decoration panel.
- Confirm that following conditions are satisfied prior to installation.
  * Ensure that noting interrupts the operation of the wireless remote controller. (Ensure that there is neither a source of light nor fluorescent lamp near the receiver. Also, ensure that the receiver is not exposed of direct sun light.)
  * Ensure that the operaiton display lamp and other indicators are easy to see.
- The installation position of this kit is 1 position of the decoration panel. Therefore, confirm that its position is set so that the single form the wireless remote controller can be easily transmitted and its display can be easily seen.

BEFORE INSTALLATION

ACCESSORIES

Check if the following accessories are included with your unit.

Name	Shape	Quantity	Name	Shape	Quantity	Name	Shape	Quantity
Receiver ass'y		1 set	Unit No. label	1 2 3 1 2 3 1 2 3	1 pc.	Plastic clamp		1 pc.
			Dry cell battery LR03 (AM4)		2 pcs.	Plastic clamp installation screw	M4 × 8	1 pc.
Wireless remote controller		1 pc.	Transmission PC board		1 pc.	Clamp		1 pc.
			Wire harness		1 pc.	Sealing pad		1 pc.
Remote controller holder		1 pc.	PCB support		4 pcs.	Operation manual		1 pc.
			Screw for installing remote controller holder	ϕ3.5 × 16ℓ	2 pcs.			

NOTE TO THE INSTALLER

Be sure to instruct the customer how to properly operate the system showing him/her the attached operation manual.

3PA59585-16N

REMOTE CONTROLLER INSTALLATION

〈Installing wireless remote controller〉

- Do not throw the remote controller or impose large shocks. Also, do not store where it may be exposed to moistture or direct sunlight.
- When operating, point the transmitting part of the remote controller in the direction of the receiver.
- The direct transmitting distance of the remote controller is approximately 7 meters.
- The signal cannot be transmitted if something such as curtains blocks the receiver and the remote controller.

- **Installing to a wall or a pillar**
  Slide the remote controller into the remote controller holder from the top.

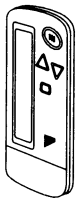

Fix the remote controller holder with the screws.

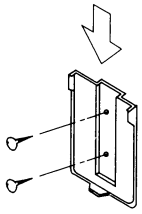

- **How to insert the batteries**
  ① Open the back cover of the remote controller by sliding it in the direction of the arrow.

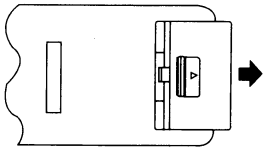

② Insert the attached dry cell batteries. Properly insert, set the batteries by matching the (+) and (−) polarity marks as indicated. Then close the cover as before.

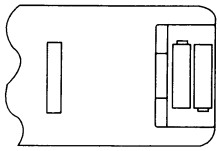

RECEIVER INSTALLATION

(1) Preparations before installation

Install this kit after electric wiring the indoor unit.

① Remove the suction grille, air filter, partition plate and decorative side panel (right-hand). referring to the installation manual provided with the indoor unit.

② Remove the steel wire and electric parts box lid, referring to the installation manual provided with the indoor unit.

(2) Determination of address and MAIN/SUB remote controller.

If setting multiple wireless remote controllers to operate in one room, perform address setting for the receiver and the wireless remote controller. (This is needed too for individual remote control in the group control mode, for the group control mode, see the installation manual provided with the indoor unit.) If setting multiple wired remote controllers in one room, change the MAIN/SUB switch of the receiver.

SETTING PROCEDURE

① **Setting the receiver**

Referring to the table below, set the wireless address switch (SS2) on the transmission PC board.

Unit No.	No.1 (Factory setting)	No.2	No.3
Wireless address switch (SS2)	1 2 3	1 2 3	1 2 3

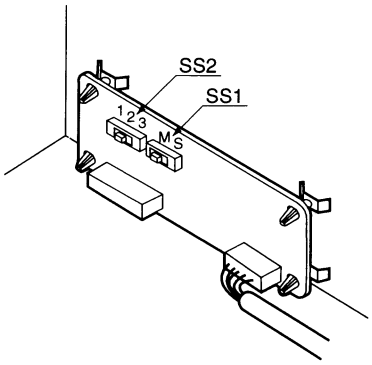

When using both a wired and a wireless remote controller for 1 indoor unit, the wired controller should be set to MAIN. Therefore, set the MAIN/SUB switch (SS1) of the receiver to SUB.

	MAIN (Factory setting)	SUB
MAIN/ SUB switch (SS1)	M S	M S

3PA59585-16N

② **Setting the address of wireless remote controller (It is factory set to "1")**

〈Setting from the remote controller〉

① Hold down the [⊞] button and the [/TEST] button for at least 4 seconds to get the Field Set mode. (Indicated in the display area in the figure at right).

② Press the [FAN] button and select a multiple setting (A/b). Each time the button is pressed the display switches between "A" and "b".

③ Press the "△ UP" button and "▽ DOWN" button to set the address.

→ 1 → 2 → 3 → 4 → 5 → 6

Address can be set from 1 to 6, but set it to 1 ~ 3 and to same address as the receiver. (The receiver does not work with address 4 ~ 6.)

④ Press the [RESERVE] button to enter the setting.

⑤ Hold down the [/TEST] button for at least 1 second to quit the Field Set mode and return to the normal display.

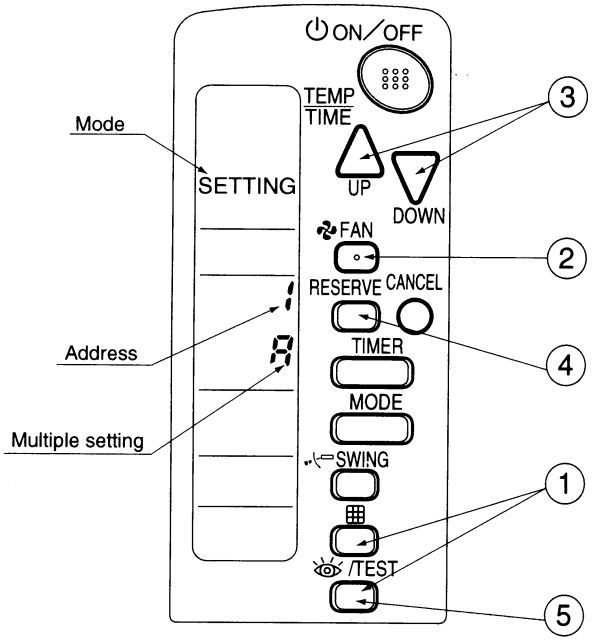

〈 Multiple settings A/b 〉

When the indoor is being operating by outside control (central remote controller, etc.), it sometimes does not respond to ON/OFF and temperature setting commands from this remote controller. Check what setting the customer wants and make the multiple setting as shown below.

Remote controller		Indoor unit	
Multiple setting	Remote controller display	To control other air conditions and units	For other than on left
A: Standard	All items displayed.	Commands other than ON/OFF and temperature setting accepted. (1 LONG BEEP or 3 SHORT BEEPS emitted)	
b: Multi System	Operations remain displayed shortly after execution.	All commands accepted (2 SHORT BEEPS)	

③ Stick the Unit No. label at decoration panel air discharge outlet as well as on the back of the wireless remote controller.

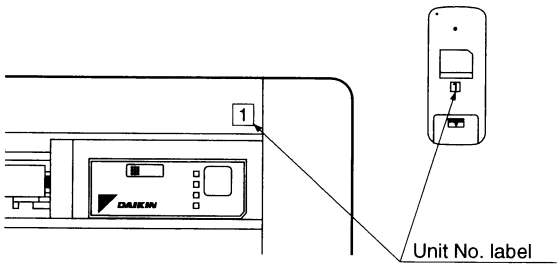

PRECAUTIONS

Set the Unit No. of the receiver and the wireless remote controller to be equal. If the settings differs, the signal from the remote controller cannot be transmitted.

3PA59585-16N

(3) Setting up the wireless display cover and the transmission PC board

(3-1) Remove the nameplate stand (part of the DAIKIN mark of decoration panel)

① Insert a screwdriver in the rectangular hole in the rear of the decoration panel and release the latch.

② To remove the nameplate stand, face downward and turn.

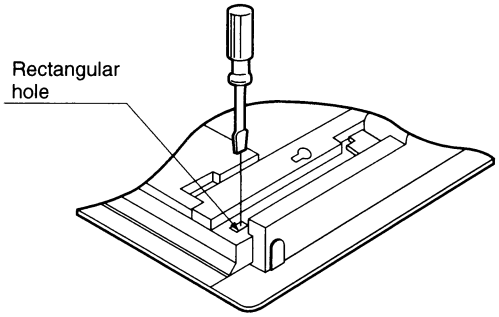

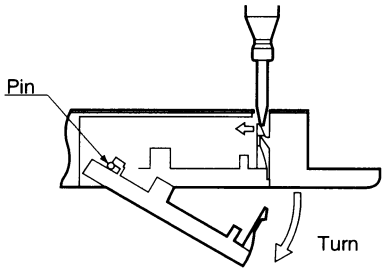

(3-2) Install the receiver ass'y

① Pass the receiver ass'y harness through the rectangular hole (long) in the recessed portion where the nameplate stand had been installed.

② Hook the groove of the receiver ass'y on the pins on both sides of the recessed portion, and install by turning.

③ Fasten the harness passed through the rectangular hole to the rear surface of the decoration panel with the plastic clamp.

④ Block the hole in which the screwdriver was inserted in step (1) with a sealing pad.

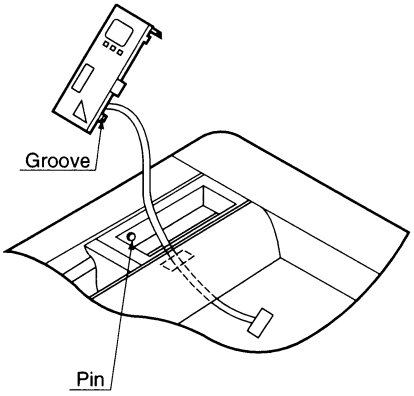

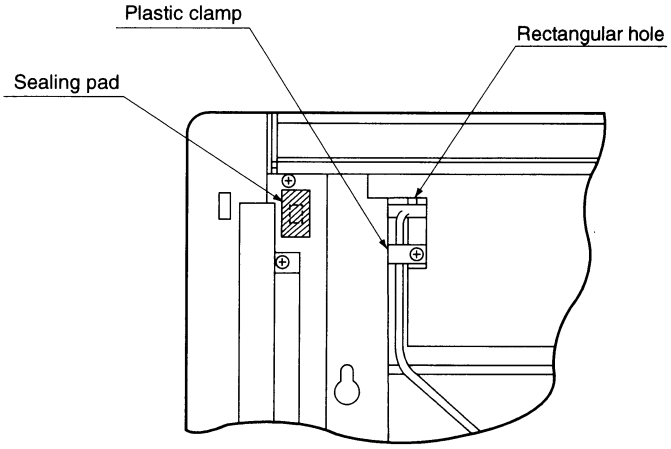

(3-3) Install the transmission PC board on the indoor unit's electric parts box.

① Pull open the electric parts box.

② Using the PCB support, install the transmission PC board at the position shown in the figure on the right.

③ Connect the connector (X2A) on the transmission PC board to the connector (X23A) on the indoor unit's PC board with the wire harness.
(Clamp the excess harness with a clamp.)

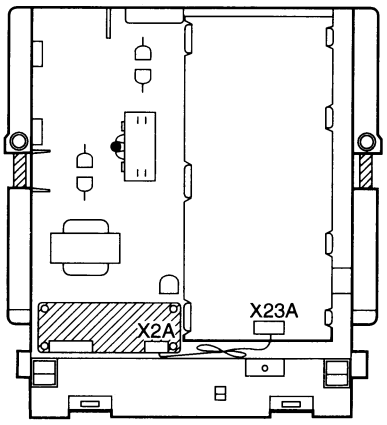

(4) SETTING UP THE INDOOR UNIT BODY AND DECORATION PANEL

- According to installation manual provided with the indoor unit, install the indoor unit and decoration panel.

3PA59585-16N

(5) Wiring to indoor unit

- Connect the receiver ass'y's harness to the transmission PC board.

① Loosen the clamp on the side of the electric patrs box (transmission wiring side), and pass the harness from the receiver ass y.

② Pass the harness through the hook so it doesn't pass over the top of the PC board. and connect it to the connector (X1A) on the transmission PC board.

③ Take up the slack in the harness inside the electric parts box, and once again clamp it with the clamp on the side of the electric parts box.

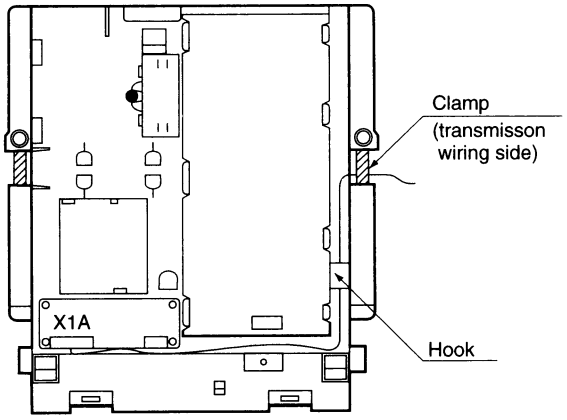

(6) SETTING UP THE SUCTION GRILLE

- According to installation manual provided with the decoration panel, install the suction grile.

FIELD SETTING

(If optional accessories are mounted on the indoor unit, the indoor unit setting may have to be changed. Refer to the instruction manual (optional hand book) for each optional accessory.)

Procedure

① When in the normal mode, push the " /TEST " button for a minimum of four seconds, and the FIELD SET MODE is entered.

② Select the desired MODE NO. with the "MODE" button.

③ Push the " UP " button and select the FIRST CODE NO.

④ Push the " DOWN " button and select the SECOND CODE NO.

⑤ Push the "RESERVE" button and the present settings are SET.

⑥ Push the " /TEST " button to return to the NORMAL MODE.

(Example) If the time to clean air filter is set to "Filter Contamination-Heavy", set Mode No. to "10", FIRST CODE NO. to "0", and SECOND CODE NO. to "02"

MODE NO.	FIRST CODE NO.	DESCRIPTION OF SETTING		SECOND CODE NO. NOTES) 1.				
				01		02		03
10	0	Filter Contamination-Heavy/Light (Setting for spacing time of display time to clean air filter) (Setting for when filter contamination is heavy, and spacing time of display time to clean air filter is to be halved)	Long Life Filter	Light	Approx. 2,500 hrs.	Heavy	Approx. 1,250 hrs	—
	3	Spacing time of display time to clean air filter count (Setting for when the filter sign is not to be displayed)		Display		Do not display		—
12	1	ON/OFF input from Outside (Setting for when forced ON/OFF is to be operated from outside.)		Forced Off		ON/OFF Operation		—
	2	Thermostat Differential Changeover (Setting for when using the remote sensor)		1℃		0.5℃		—
13	4	Air Flow Direction Range Setting		Normal		Normal		Lower

NOTES)

1. The SECOND CODE NO. is factory set to "01". However, for the following cases it is set to "02".
   - Air Flow Direction Range Setting

3PA59585-16N

2. Do not use any settings not listed in the table.
3. For group control with a wireless remote controller, initial settings for all the indoor units of the group are equal. (For group control, refer to the installation manual attached to the in door unit for group control.)

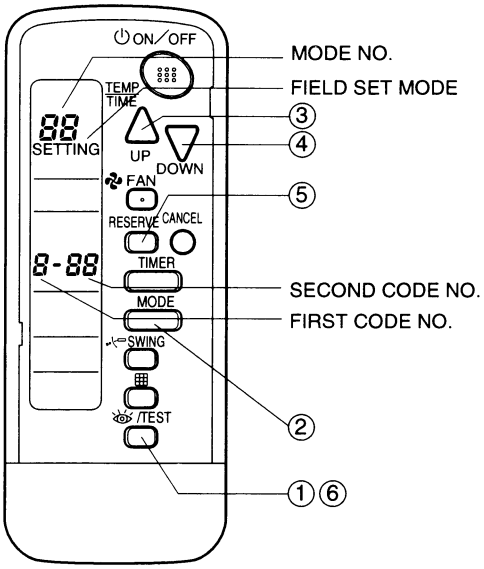

TEST OPERATION

- Perform test operation according to the instructions in the installation manual attached to the indoor unit.
- After refrigerant piping, drain piping, and electric wiring, operate according to the table to protect the unit.

〈**PRECAUTIONS**〉
Refer to malfunction diagnosis label attached to the unit it if does not operate.

Order	Operation
(1)	Open gas side stop valve.
(2)	Open liquid side stop valve.
(3)	Electrify crank case heater for 6 hours.
(4)	Set to cooling with the remote controller and push ON/OFF button to start operation.
(5)	Push /TEST button twice and operate in TEST OPERATION mode for 3 minutes.
(6)	Push SWING button and confirm its operation.
(7)	Push /TEST button and operate normally.
(8)	Confirm its function according to the operation manual.

3PA59585-16N

1.2 BRC7E61W / BRC7E65 (for FXF)

1.2.1 Dimensions

Unit (mm)

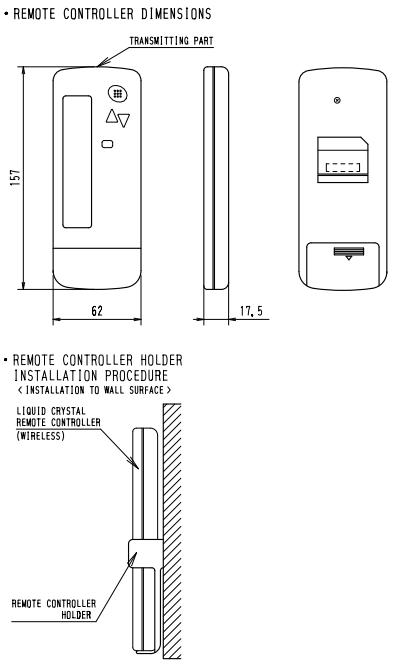

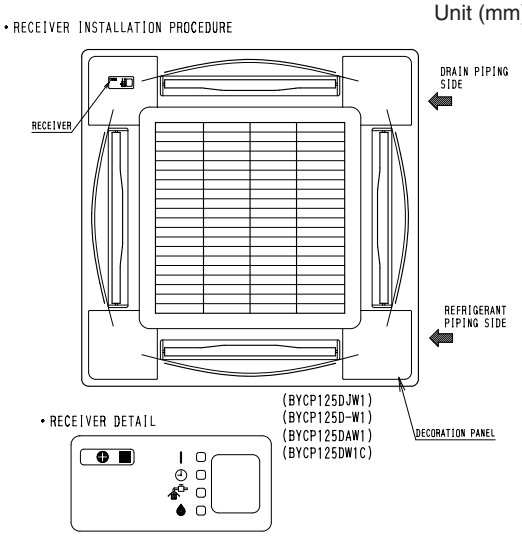

• WIRELESS REMOTE CONTROLLER KIT FOR EACH DECORATION PANEL

WIRELESS REMOTE CONTROLLER KIT	DECORATION PANEL
BRC7E51W BRC7EA51W	BYCP125DJW1 BYCP125DAW1
BRC7E61W	BYCP125D-W1
BRC7E65	
BRC7E61WC	BYCP125DW1C
BRC7E65WC	

3D034088B

1.2.2 Operation Manual

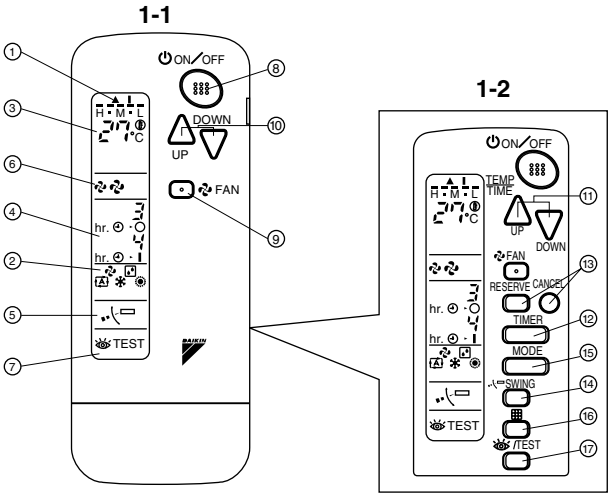

1

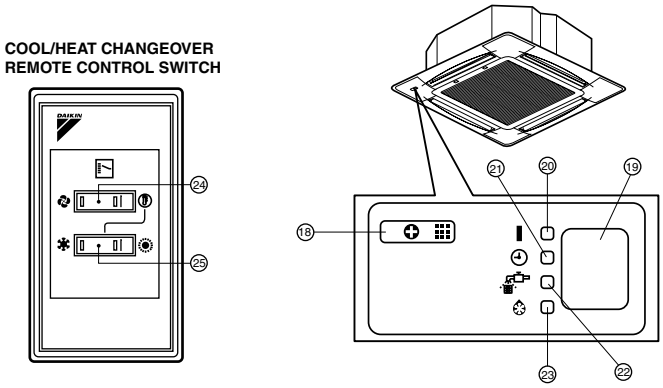

1-3 2

3PA63363-24W

1. SAFETY CONSIDERATIONS

Read the following cautions carefully and use your equipment properly.
There are three kinds of safety cautions and tips listed here as follows:

WARNING ..... Improper handling can lead to such serious consequences as death or severe injury.

CAUTION ..... Improper handling can lead to injury or damage. It could also have serious consequences under certain conditions.

NOTE ..... These instructions will ensure proper use of the equipment.

Be sure to follow these important safety cautions.
Keep these warning sheets handy so that you can refer to them if needed.
Also, if this equipment is transferred to a new user, make sure to hand over this user's manual to the new user.

WARNING

Do not expose yourself directly to the cool air currents too long nor allow the air in the room to become too cold.
Doing so may make you feel sick or damage your health.

If you detect any abnormality (such as the smell of fire), turn off the power and contact your dealer for instructions.
If you keep using the air conditioner under these conditions, it will eventually break down, and could cause electric shocks or catch fire.

Ask your dealer to install your equipment.
Improper installation could cause water leakage, electric shocks or fire.

Ask your dealer to perform servicing or repairs whenever necessary.
Improper servicing or repairs could cause water leakage, electric shocks or fire.

Do not stick your fingers or any other objects into the air inlet, air outlet or air direction vanes during operation.
The high-speed fan is dangerous and could cause injury.

Ask your dealer to remove and reinstall your equipment whenever necessary.
Improper installation could cause water leakage, electric shocks or fire.

CAUTION

Do not use the air conditioner for purposes other than air conditioning.
Do not use the air conditioner for special purposes such as preserving or protecting food, animals, plants, precision machinery or works of art, since the quality of such items could be adversely affected.

When using the air conditioner with other heating equipment, ventilate the room from time to time.
Inadequate ventilation could cause an oxygen shortage.

Do not expose your pets or plants to the air current.
They may be adversely affected.

Do not operate the air conditioner with a wet hand.
Otherwise, you could receive an electric shock.

Do not place any burning appliance in the air current from the air conditioner, since such appliance may suffer incomplete combustion.

Never place nor use any inflammable sprays near the air conditioner, since such sprays could cause a fire.

3PA63363-24W

2. NAMES AND FUNCTIONS OF THE OPERATING SECTION (Fig. 1, 2)

1	**DISPLAY " ▲ " (SIGNAL TRANSMISSION)**
	This lights up when a signal is being transmitted.
2	**DISPLAY " " " " " " " " " (OPERATION MODE)**
	This display shows the current OPERATION MODE. For cooling only type, " " (Auto) and " " (Heating) are not installed.
3	**DISPLAY " H M L 27 °C " (SET TEMPERATURE)**
	This display shows the set temperature.
4	**DISPLAY " hr. 3 hr. 4 " (PROGRAMMED TIME)**
	This display shows PROGRAMMED TIME of the system start or stop.
5	**DISPLAY " " (AIR FLOW FLAP)**
	Refer to Note 1.
6	**DISPLAY " " " " (FAN SPEED)**
	The display shows the set fan speed.
7	**DISPLAY " TEST " (INSPECTION/ TEST OPERATION)**
	When the INSPECTION/TEST OPERATION BUTTON is pressed, the display shows the system mode is in.

8	**ON/OFF BUTTON**
	Press the button and the system will start. Press the button again and the system will stop.
9	**FAN SPEED CONTROL BUTTON**
	Press this button to select the fan speed, HIGH or LOW, of your choice.
10	**TEMPERATURE SETTING BUTTON**
	Use this button for SETTING TEMPERATURE (Operates with the front cover of the remote controller closed.)
11	**PROGRAMMING TIMER BUTTON**
	Use this button for programming "START and/or STOP" time. (Operates with the front cover of the remote controller opened.)
12	**TIMER MODE START/STOP BUTTON**
	Refer to Note 1.
13	**TIMER RESERVE/CANCEL BUTTON**
	Refer to Note 2.
14	**AIR FLOW DIRECTION ADJUST BUTTON**
	Refer to Note 1.
15	**OPERATION MODE SELECTOR BUTTON**
	Press this button to select OPERATION MODE.
16	**FILTER SIGN RESET BUTTON**
	Refer to the section of MAINTENANCE in the operation manual attached to the indoor unit.
17	**INSPECTION/TEST OPERATION BUTTON**
	This button is used only by qualified service persons for maintenance purposes.
18	**EMERGENCY OPERATION SWITCH**
	This switch is readily used if the remote controller does not work.
19	**RECEIVER**
	This receives the signals from the remote controller.

3PA63363-24W

Note 1 : page 44, Note 2 : page 45

20	**OPERATING INDICATOR LAMP (Red)**
	This lamp stays lit while the air conditioner runs. It flashes when the unit is in trouble.
21	**TIMER INDICATOR LAMP (Green)**
	This lamp stays lit while the timer is set.
22	**AIR FILTER CLEANING TIME INDICATOR LAMP (Red)**
	Lights up when it is time to clean the air filter.
23	**DEFROST LAMP (Orange)**
	Lights up when the defrosting operation has started. (For cooling only type this lamp does not turn on.)
24	**FAN/AIR CONDITIONING SELECTOR SWITCH**
	Set the switch to " " (FAN) for FAN and " " (A/C) for HEAT or COOL.
25	**COOL/HEAT CHANGEOVER SWITCH**
	Set the switch to " " (COOL) for COOL and " " (HEAT) for HEAT.

NOTES

- For the sake of explanation, all indications are shown on the display in Figure 1 contrary to actual running situations.
- Fig. 1-2 shows the remote controller with the front cover opened.
- Fig. 1-3 shows this remote controller can be used in conjunction with the one provided with the *VRV* system.
- If the air filter cleaning time indicator lamp lights up, clean the air filter as explained in the operation manual provided with the indoor unit.
  After cleaning and reinstalling the air filter, press the filter sign reset button on the remote controller. The air filter cleaning time indicator lamp on the receiver will go out.
- The Defrost Lamp will flash when the power is turned on. This is not a malfunction.

3. HANDLING FOR WIRELESS REMOTE CONTROLLER

Precautions in handling remote controller

Direct the transmitting part of the remote controller to the receiving part of the air conditioner.

If something blocks the transmitting and receiving path of the indoor unit and the remote controller as curtains, it will not operate.

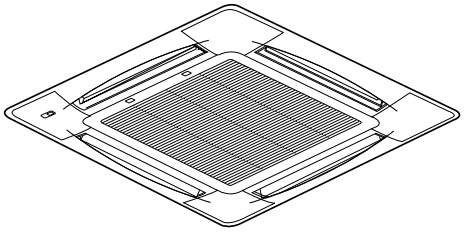

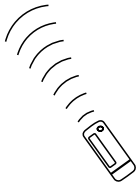

2 short beeps from the receiver indicates that the transmission is properly done.

Transmitting distance is approximately 7 m.

Do not drop or get it wet.

It may be damaged.

Never press the button of the remote controller with a hard, pointed object.

The remote controller may be damaged.

Installation site

- It is possible that signals will not be received in rooms that have electronic fluorescent lighting. Please consult with the salesman before buying new fluorescent lights.
- If the remote controller operated some other electrical apparatus, move that machine away or consult your dealer.

3PA63363-24W

Placing the remote controller in the remote controller holder

Install the remote controller holder to a wall or a pillar with the attached screw. (Make sure it transmits)

Placing the remote controller	Removing the remote controller
Slide from above	Pull it upward

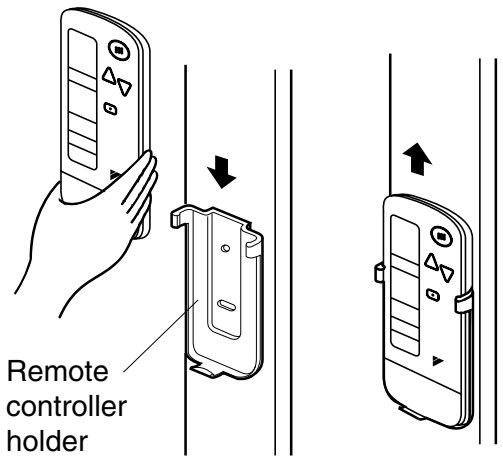

How to put the dry batteries

(1) Remove the back cover of the remote controller to the direction pointed by the arrow mark.

(2) Put the batteries
Use two LR03<IEC> dry cell batteries. Put dry batteries correctly to fit their (+) and (–).

(3) Close the cover

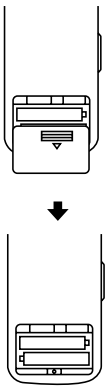

— When to change batteries

Under normal use, batteries last about a year. However, change them whenever the indoor unit doesn't respond or responds slowly to commands, or if the display becomes dark.

[CAUTIONS]

- Replace all batteries at the same time, do not use new and old batteries intermixed.
- In case the remote controller is not used for a long time take out all batteries in order to prevent liquid leak of the battery.

IN THE CASE OF CENTRALIZED CONTROL SYSTEM

If the indoor unit is under centralized control, it is necessary to switch the remote controller's setting. In this case, contact your DAIKIN dealer.

4. OPERATION RANGE

Split System

If the temperature or the humidity is beyond the following conditions, safety devices may work and the air conditioner may not operate, or sometimes, water may drop from the indoor unit.

COOLING [°C]

OUTDOOR UNIT	INDOOR TEMPERATURE		INDOOR HUMIDITY	OUTDOOR TEMPERATURE	
RZP71 DV1/VAL RZP100 DV1/VAL RZP125 DV1/TAL RZP140 DTAL	DB	21 to 35	80% or below	DB	– 5 to 50
	WB	14 to 25			

HEATING [°C]

OUTDOOR UNIT	INDOOR TEMPERATURE		OUTDOOR TEMPERATURE	
RZP71 DV1/VAL RZP100 DV1/VAL RZP125 DV1/TAL RZP140 DTAL	DB	15 to 27	DB	– 14 to 21
			WB	– 15 to 15.5

DB: Dry bulb temperature
WB: Wet bulb temperature

3PA63363-24W

The setting temperature range of the remote controller is 16°C to 32°C.

***VRV* System**
See the operation manual provided with the air conditioner.

5. OPERATION PROCEDURE

Refer to figure 1 (Note 1)

- Operating procedure varies with heat pump type and cooling only type. Contact your Daikin dealer to confirm your system type.
- To protect the unit, turn on the main power switch 6 hours before operation.
- If the main power supply is turned off during operation, operation will restart automatically after the power turns back on again.

COOLING, HEATING, AUTOMATIC, FAN, AND PROGRAM DRY OPERATION

Operate in the following order.

- AUTOMATIC OPERATION can be selected only by Heat pump split system or Heat recovery *VRV* system.
- For cooling only type, “COOLING”, and “FAN” and “DRY”operation are able to select.

⟨⟨FOR SYSTEMS WITHOUT COOL/HEAT CHANGEOVER REMOTE CONTROL SWITCH⟩⟩

Refer to figure 1-1, 2 (Note 2)

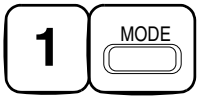

OPERATION MODE SELECTOR

Press OPERATION MODE SELECTOR button several times and select the OPERATION MODE of your choice as follows.

■ COOLING OPERATION ..... “ ❄ ”
■ HEATING OPERATION ..... “ ☀ ”
■ AUTOMATIC OPERATION ..... “ Ⓐ ”
- In this operation mode, COOL/HEAT changeover is automatically conducted.

■ FAN OPERATION..... “ ✿ ”
■ DRY OPERATION ..... “ ◘ ”
- The function of this program is to decrease the humidity in your room with the minimum temperature decrease.
- Micro computer automatically determines TEMPERATURE and FAN SPEED.
- This system does not go into operation if the room temperature is below 16°C.

ON/OFF

Press ON/OFF button
OPERATION lamp lights up or goes off and the system starts or stops OPERATION.

NOTE
- Do not turn OFF power immediately after the unit stops. Then, wait no less than 5 minutes.
  Water is leaking or there is something else wrong with the unit.

⟨⟨FOR SYSTEMS WITH COOL/HEAT CHANGEOVER REMOTE CONTROL SWITCH⟩⟩

Refer to figure 1-1,3 (Note 3)

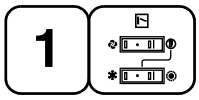

OPERATION MODE SELECTOR

(1) Select OPERATION MODE with the COOL/HEAT CHANGEOVER REMOTE CONTROL SWITCH as follows.

■ COOLING OPERATION ..... “ ”

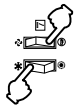

■ HEATING OPERATION ..... “ ”

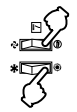

3PA63363-24W

Note 1 : page 37, Note 2 : page 37, Note 3 : page 37

■ FAN OPERATION ..... " "

■ DRY OPERATION ..... " "

- See "FOR SYSTEM WITHOUT COOL/ HEAT CHANGEOVER REMOTE CONTROL SWITCH" for details on dry operation.

(2) Press OPERATION MODE SELECTOR button several times and select " "
(This operation is only available during dry operation.)

2 ON/OFF

Press ON/OFF button
OPERATION lamp lights up or goes off and the system starts or stops OPERATION.

NOTE
- Do not turn OFF power immediately after the unit stops. Then, wait no less than 5 minutes.
  Water is leaking or there is something else wrong with the unit.

[EXPLANATION OF HEATING OPERATION]
DEFROST OPERATION

- As the frost on the coil of an outdoor unit increase, heating effect decreases and the system goes into DEFROST OPERATION.
- The fan operation stops and the DEFROST lamp of the indoor unit goes on. After 6 to 8 minutes (maximum 10 minutes) of DEFROST OPERATION, the system returns to HEATING OPERATION.

Heating capacity & Outdoor air temperature
- Heating capacity drops as outdoor air temperature lowers. If feeling cold, use another heater at the same time as this air conditioner.
- Hot air is circulated to warm the room. It will take some time from when the air conditioner is first started until the entire room becomes warm. The internal fan automatically turns at low speed until the air conditioner reaches a certain temperature on the inside. In this situation, all you can do is wait.
- If hot air accumulates on the ceiling and feet are left feeling cold, it is recommended to use a circulator. For details, contact the place of purchase.

ADJUSTMENT

For programming TEMPERATURE, FAN SPEED and AIR FLOW DIRECTION, follow the procedure shown below.

TEMPERATURE SETTING

Press TEMPERATURE SETTING button and program the setting temperature.

UP — Each time this button is pressed, setting temperature rises 1°C.

DOWN — Each time this button is pressed, setting temperature lowers 1°C.

In case of automatic operation

UP — Each time this button is pressed, setting temperature shifts to "H" side.

DOWN — Each time this button is pressed, setting temperature shifts to "L" side.

[°C]

	H	▪	M	▪	L
Setting temperature	25	23	22	21	19

- The setting is impossible for fan operation.

NOTE
- The setting temperature range of the remote controller is 16°C to 32°C.

3PA63363-24W

FAN SPEED CONTROL

Press FAN SPEED CONTROL button.
High or Low fan speed can be selected.
The microchip may sometimes control the fan speed in order to protect the unit.

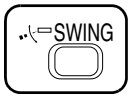

AIR FLOW DIRECTION ADJUST

UP AND DOWN DIRECTION

- The movable limit of the flap is changeable. Contact your Daikin dealer for details.

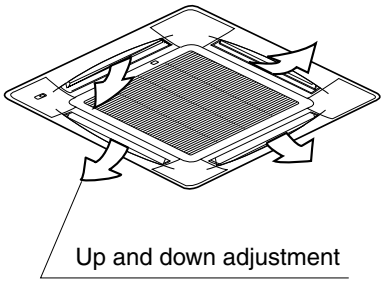

Press the AIR FLOW DIRECTION ADJUST button to select the air direction as shown below.

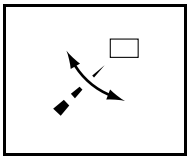

DISPLAY appears and the air flow direction continuously varies. (Automatic swing setting)

Press AIR FLOW DIRECTION ADJUST button to select the air direction of your choice.

DISPLAY vanishes the air flow direction is fixed (Fixed air flow direction setting).

MOVEMENT OF THE AIR FLOW FLAP

For the following conditions, micro computer controls the air flow direction so it may be different from the display.

Operation mode	Cooling	Heating
Operation conditions	• When operating continuously at horizontal air flow direction	• When room temperature is higher than the set temperature • At defrost operation (The flaps blow horizontally to avoid blowing cold air directly on the occupants of the room.)

NOTE

- If you try cooling or programmed drying, while the flaps are facing downward, air flow direction may change unexpectedly. There is nothing wrong with the equipment. This serves to prevent dew formed on parts in the air discharge outlet from dripping.
- Operation mode includes automatic operation.

PROGRAM TIMER OPERATION

Operate in the following order.

- The timer is operated in the following two ways.
  Programming the stop time (◷ ▸ ○)
  .... The system stops operating after the set time has elapsed.
  Programming the start time (◷ ▸ |)
  .... The system starts operating after the set time has elapsed.
- The timer can be programmed a maximum of 72 hours.
- The start and the stop time can be simultaneously programmed.

TIMER MODE START/STOP

Press the TIMER MODE START/STOP button several times and select the mode on the display.
The display flashes.
For setting the timer stop .... "◷ ▸ ○"
For setting the timer start .... "◷ ▸ |"

3PA63363-24W

2 UP DOWN PROGRAMMING TIME

Press the PROGRAMMING TIME button and set the time for stopping or starting the system.

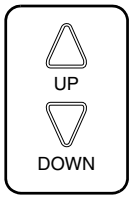

When this button is pressed, the time advances by 1 hour.

When this button is pressed, the time goes backward by 1 hour.

3 RESERVE TIMER RESERVE

Press the TIMER RESERVE button.
The timer setting procedure ends.
The display or changes from flashing light to a constant light.

4 CANCEL TIMER CANCEL

Press the TIMER OFF button to cancel programming. The display vanishes.

For example.

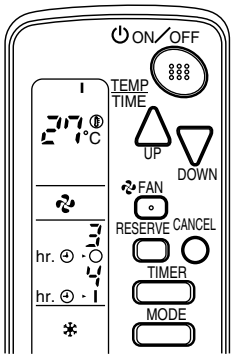

When the timer is programmed to stop the system after 3 hours and start the system after 4 hours, the system will stop after 3 hours and then 1 hour later the system will start.

NOTE

- When the timer is programmed to stop the system after 3 hours and start the system after 4 hours, the system will stop after 3 hours and then 1 hour later the system will start.
- After the timer is programmed, the display shows the remaining time.

HOW TO SET MASTER REMOTE CONTROLLER (For *VRV* system)

- When the system is installed as shown below, it is necessary to designate the master remote controller.

■ For Heat pump system
When one outdoor unit is connected with several indoor units.

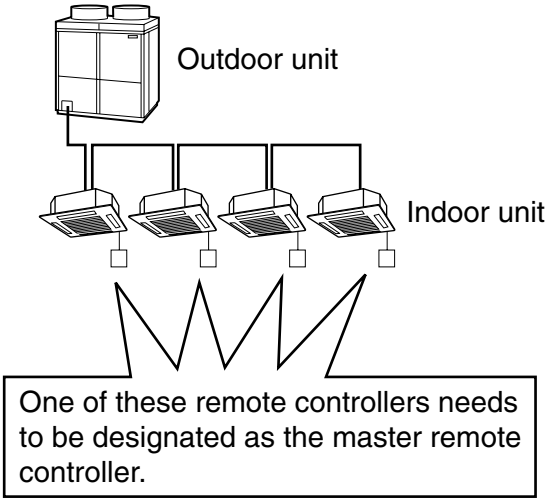

■ For Heat recovery system
When one BS unit is connected with several indoor units.

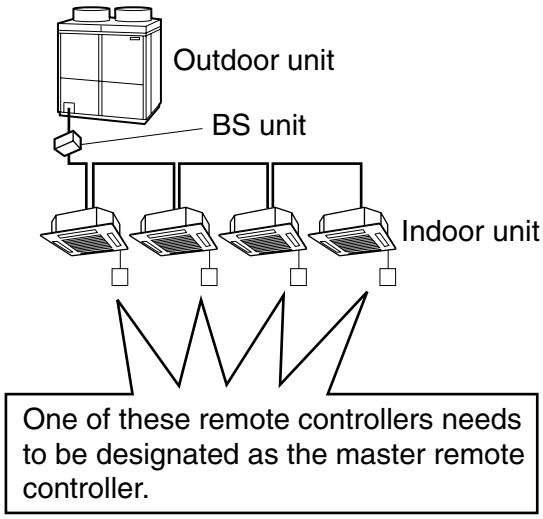

- Only the master remote controller can select HEATING, COOLING or AUTOMATIC (only Heat recovery system) OPERATION.

3PA63363-24W

When the indoor unit with master remote controller is set to “COOL”, you can switch over operation mode between “FAN”, “DRY” and “COOL”.
When the indoor unit with master remote controller is set to “HEAT”, you can switch over operation mode between “FAN” and “HEAT”.
When the indoor unit with master remote controller is set to “FAN”, you cannot switch operation mode.
When attempting settings than that consented above, a “peep” is emitted as a warning.
Only with Heat recovery system, you can set the indoor unit to AUTOMATIC. Attempting to do so, a “peep” will be emitted as a warning.

How to designate the master remote controller

Operate in the following order.

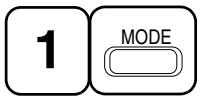

Continuously press the OPERATION MODE SELECTOR button for 4 seconds.

The displays showing “ ◷ ” of all slave indoor unit connected to the same outdoor unit or BS unit flash.

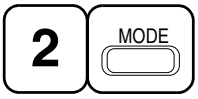

Press the OPERATION MODE SELECTOR button to the indoor unit that you wish to designate as the master remote controller. Then designation is completed. This indoor unit is designated as the master remote controller and the display showing “ ◷ ” vanishes.

- To change settings, repeat steps 1 and 2.

EMERGENCY OPERATION

When the remote controller does not work due to battery failure or the absence thereof, use this switch which is located beside the discharge grille on the main unit. When the remote controller does not work, but the battery low indicator on it is not lit, contact your dealer.

[START]

To press the emergency operation switch.

The machine runs in the previous mode.
The system operates with the previously set air flow direction.

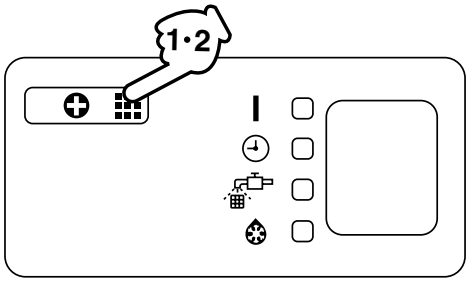

[STOP]

Press the EMERGENCY OPERATION switch again.

PRECAUTIONS FOR GROUP CONTROL SYSTEM OR TWO REMOTE CONTROLLER CONTROL SYSTEM

This system provides two other control systems beside individual control (one remote controller controls one indoor unit) system. Confirm the following if your unit is of the following control system type.

- **Group control system**
  One remote controller controls up to 16 indoor units.
  All indoor units are equally set.
- **Two remote controller control system**
  Two remote controllers control one indoor unit. (In case of group control system, one group of indoor units)
  The unit follows individual operation.

3PA63363-24W

NOTES

- Cannot have two remote controller control system with only wireless remote controllers. (It will be a two remote controller control system having one wired and one wireless remote controllers.)
- Under two remote controller control system, wireless remote controller cannot control timer operation.
- Only the operating indicator lamp out of 3 other lamps on the indoor unit display functions.

NOTE

- Contact your Daikin dealer in case of changing the combination or setting of group control and two remote controller control systems.

6. NOT MALFUNCTION OF THE AIR CONDITIONER

The following symptoms do not indicate air conditioner malfunction

I. THE SYSTEM DOES NOT OPERATE

- **The system does not restart immediately after the ON/OFF button is pressed.**
  If the OPERATION lamp lights, the system is in normal condition. It does not restart immediately because a safety device operates to prevent overload of the system. After 3 minutes, the system will turn on again automatically.
- **The system does not restart immediately when TEMPERATURE SETTING button is returned to the former position after pushing the button.**
  It does not restart immediately because a safety device operates to prevent overload of the system. After 3 minutes, the system will turn on again automatically.
- **If the reception beep is rapidly repeated 3 times (It sounds only twice when operating normally.)**
  Control is set to the optional controller for centralized control.
- **If the defrost lamp on the indoor unit's display is lit when heating is started.**
  This indication is to warn against cold air being blown from the unit. There is nothing wrong with the equipment.

7. HOW TO DIAGNOSE TROUBLE SPOTS

I. EMERGENCY STOP

When the air conditioner stops in emergency, the run lamp on the indoor unit starts blinking. Take the following steps yourself to read the malfunction code that appears on the display. Contact your dealer with this code. It will help pinpoint the cause of the trouble, speeding up the repair.

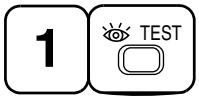

Press the INSPECTION/TEST button to select the inspection mode " 0 ".

" 0 " appears on display and blinks. "UNIT" lights up.

Press PROGRAMMING TIMER BUTTON and change the unit number.

Press to change the unit number until the indoor unit beeps and perform the following operation according to the number of beeps.

Number of beeps

3 short beeps .... Perform all steps from 3 to 6.

1 short beep ..... Perform 3 and 6 steps
1 long beep..... Normal state

3PA63363-24W

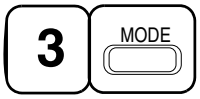

Press OPERATION MODE SELECTOR BUTTON

" 0 " on the left-hand of the malfunction code blinks.

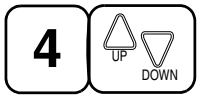

Press PROGRAMMING TIMER BUTTON and change the malfunction code.

Press until the indoor unit beeps twice.

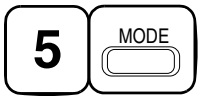

Press OPERATION MODE SELECTOR BUTTON

" 0 " on the right-hand of the malfunction code blinks.

Press PROGRAMMING TIMER BUTTON and change the malfunction code.

Press until the indoor unit makes a long beep.
The malfunction code is fixed when the indoor unit makes a long beep.

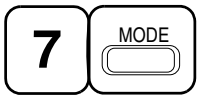

Reset of the display

Press OPERATION MODE SELECTOR BUTTON to get the display back to the normal state.

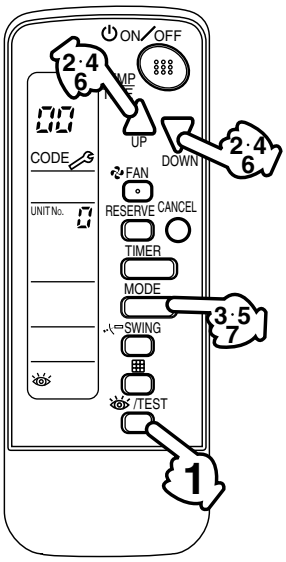

II. IN CASE BESIDES EMERGENCY STOP

1. The unit does not operate at all.

- Check if the receiver is exposed of sunlight or strong light. Keep receiver away from light.
- Check if there are batteries in the remote controller. Place the batteries.
- Check if the indoor unit number and wireless remote controller number are equal.

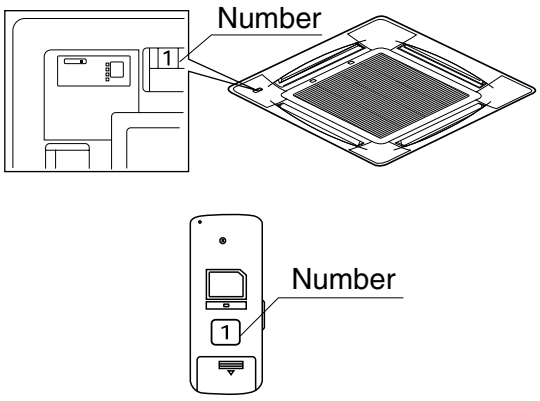

Operate the indoor unit with the remote controller of the same number.
Signal transmitted from a remote controller of a different number cannot be accepted. (If the number is not mentioned, it is considered as "1")

3PA63363-24W

2. **The system operates but it does not sufficiently cool or heat.**
   - If the set temperature is not proper.
   - If the FAN SPEED is set to LOW SPEED.
   - If the air flow angle is not proper.

Contact the place of purchase in the following case.

WARNING

When you detect a burning odor, shut OFF power immediately and contact the place of purchase. Using the equipment in anything but proper working condition can result in equipment damage, electric shock and/or fire.

[Trouble]

The RUN lamp of the indoor unit is flashing and the unit does not work at all.

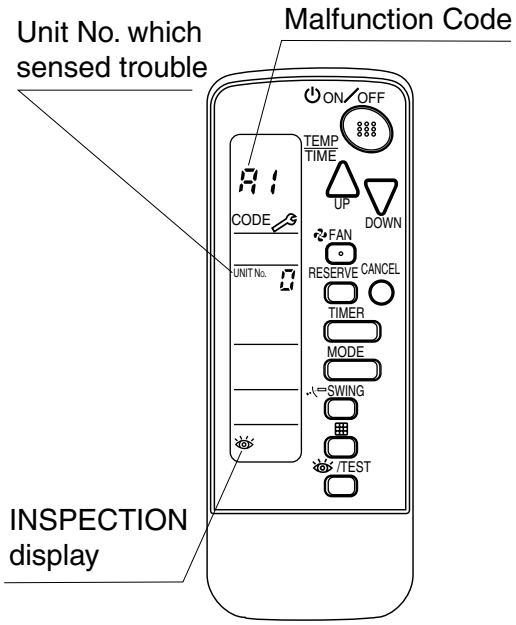

[Remedial action]

Check the malfunction code (A1 - UF) on the remote control and contact the place of purchase.

3PA63363-24W

1.2.3 Installation Manual

1. BEFORE INSTALLATION

1-1 ACCESSORIES

Check if the following accessories are included with your unit.

Name	Receiver	Wireless remote controller	Remote controller holder	Dry cell battery LR03 (AM4)	Unit No. label
Quantity	1 set.	1 pc.	1 pc.	2 pcs.	1 pc.
Shape	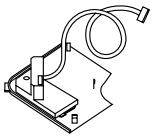	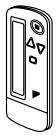		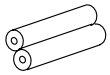	

Name	Screw for installing remote controller holder	Operation manual	Sealing pad	Binding band
Quantity	2 pcs.	1 pc.	1 pc.	2 pc.
Shape			20 × 35	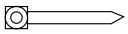

1-2 NOTE TO THE INSTALLER

- Be sure to instruct the customer how to properly operate the system showing him/her the attached operation manual.

2. REMOTE CONTROLLER INSTALLATION

〈**Installing wireless remote controller**〉

- Do not throw the remote controller or impose large shocks. Also, do not store where it may be exposed to moisture or direct sunlight.
- When operating, point the transmitting part of the remote controller in the direction of the receiver.
- The direct transmitting distance of the remote controller is approximately 7 meters.
- The signal cannot be transmitted if something such as curtains blocks the receiver and the remote controller.

- **Installing to a wall or a pillar**
  Slide the remote controller into the remote controller holder from the top.

  Fix the remote controller holder with the screws.

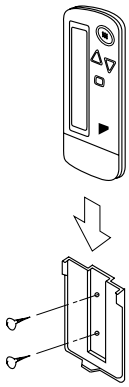

3P091240-3D

- **How to insert the batteries**
  1. Open the back cover of the remote controller by sliding it in the direction of the arrow.

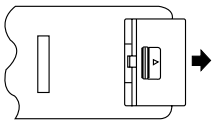

  2. Insert the attached dry cell batteries. Properly insert, set the batteries by matching the (+) and (–) polarity marks as indicated. Then close the cover as before.

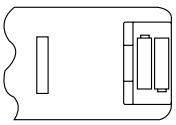

3. RECEIVER INSTALLATION

(1) Preparations before installation

Install this kit after installing the decoration panel.

1. Remove the suction grille and the air filter according to the instructions in the installation manual attached to the decoration panel.
2. Remove the control box lid according to the instructions in the installation manual attached to the indoor unit.

(2) Determination of address and MAIN/SUB remote controller.

If setting multiple wireless remote controllers to operate in one room, perform address setting for the receiver and the wireless remote controller.

If setting multiple wired remote controllers in one room, change the MAIN/SUB switch of the receiver.

SETTING PROCEDURE

1. Setting the receiver

Through the small opening on the back of the receiver, set the wireless address switch (SS2) on the printed circuit board according to the table below.

Unit No.	No. 1	No. 2	No. 3
Wireless address switch (SS2)	1 2 3	1 2 3	1 2 3

When using both a wired and a wireless remote controller for 1 indoor unit, the wired controller should be set to MAIN. Therefore, set the MAIN/SUB switch (SS1) of the receiver to SUB.

	MAIN	SUB
MAIN/SUB switch (SS1)	S M	S M

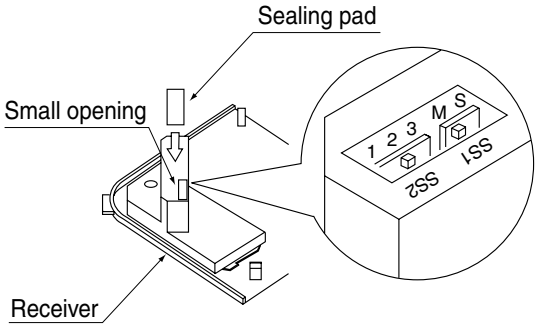

After completing setting, seal off the opening of the address switch and the MAIN/SUB switch with the attached sealing pad.

3P091240-3D

2. Setting the address of wireless remote controller (It is factory set to “ 1 ”)

〈Setting from the remote controller〉

1. Hold down the [⊞] button and the [/TEST] button for at least 4 seconds to get the Field Set mode. (Indicated in the display area in the figure at right.)
2. Press the [FAN] button and select a multiple setting (A/b). Each time the button is pressed the display switches between “A” and “b”.
3. Press the “ △ UP ” button and “ ▽ DOWN ” button to set the address.

   →1→2→3→4→5→6

   Address can be set from 1 to 6, but set it to 1 ~ 3 and to same address as the receiver. (The receiver does not work with address 4 ~ 6.)
4. Press the [RESERVE] button to enter the setting.
5. Hold down the [/TEST] button for at least 1 second to quit the Field Set mode and return to the normal display.

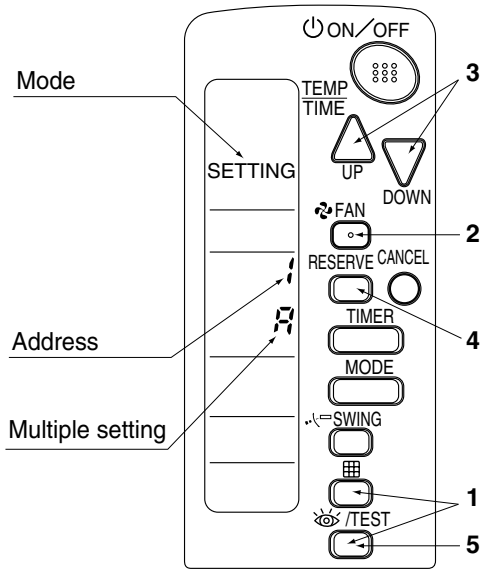

Multiple settings A/b

When the indoor unit is being operating by outside control (central remote controller, etc.), it sometimes does not respond to ON/OFF and temperature setting commands from this remote controller. Check what setting the customer wants and make the multiple setting as shown below.

Remote controller		Movement when the operation is controlled by the other air conditioners and equipment
Multiple setting	Remote controller display	
A: Standard	All items displayed.	When operation changeover, temperature setting or the like is carried out from the remote controller, the indoor unit rejects the instruction. (Signal receiving sound “peeh” or “pick-pick-pick”) As a result, a discrepancy between the operation state of the indoor unit and the indication of the remote controller display occurs.
b: Multi System	Operations remain displayed shortly after execution.	Since the indication of the remote controller is turned off, no discrepancy such as mentioned above occurs.

3. Stick the Unit No. label on the air outlet of the decoration panel and the back of the wireless remote controller.

[PRECAUTIONS]

Set the Unit No. of the receiver and the wireless remote controller to be equal. If the settings differs, the signal from the remote controller cannot be transmitted.

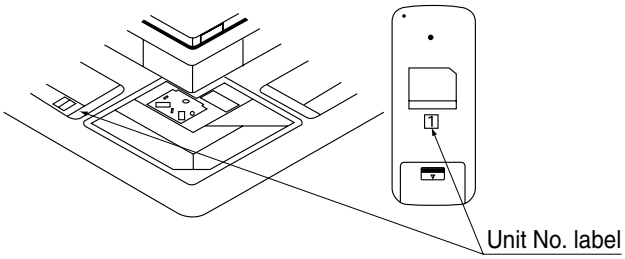

3P091240-3D

(3) Receiver installation

1. Detach the decorative corner panel diagonally opposite to swing motor. This corner panel piece is not needed hereafter.
   (For instructions on attaching/ detaching decorative panels, see the installation manual provided with the original panel.)

   The receiver cannot be installed anywhere but in this corner.
2. Pull the relay harness from the receiver up to where the clamp meets the stopper, as shown at right.
3. Install the receiver where the decorative corner panel before. Proceed in the opposite order in which you removed the corner panel.
4. Fit the relay harness under the tab as shown at right and connect it to connector X24A on the indoor unit PC board. Bundle the remaining harness with the included binding band so that it does not droop or get pinched in the suction grille.
   Use the included binding band to prevent the relay harness from sagging down and getting caught in the suction grill.
5. Attach the lid to the indoor unit's switch box and the suction grille to the decorative panel.

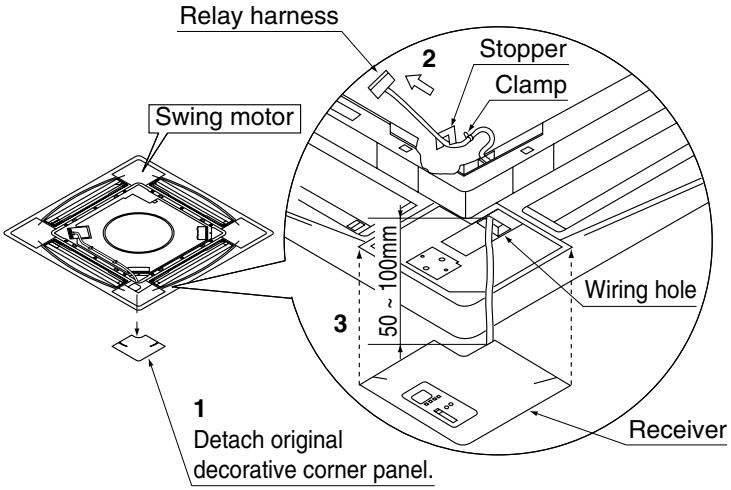

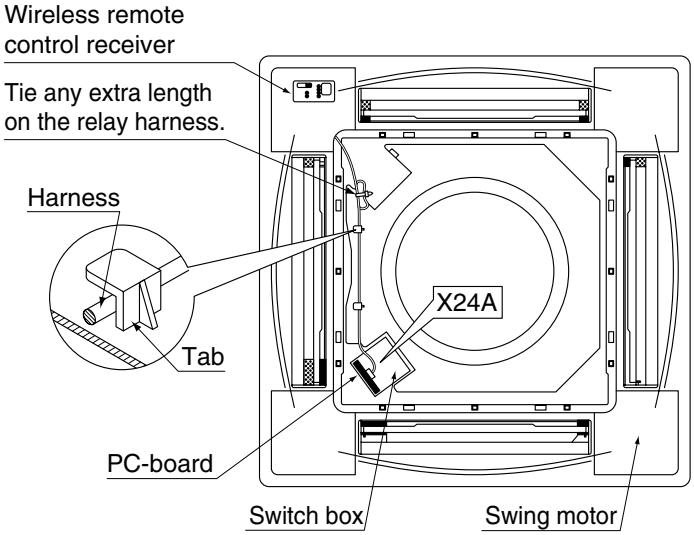

4. FIELD SETTING

If optional accessories are mounted on the indoor unit, the indoor unit setting may have to be changed. Refer to the instruction manual (optional hand book) for each optional accessory.

Procedure

1. When in the normal mode, press the [/TEST] button for a minimum of four seconds, and the FIELD SET MODE is entered.
2. Select the desired MODE NO. with the [MODE] button.
3. Push the " UP " button and select the FIRST CODE NO.
4. Push the " DOWN " button and select the SECOND CODE NO.
5. Push the [RESERVE] button and the present settings are SET.
6. Push the [/TEST] button to return to the NORMAL MODE.

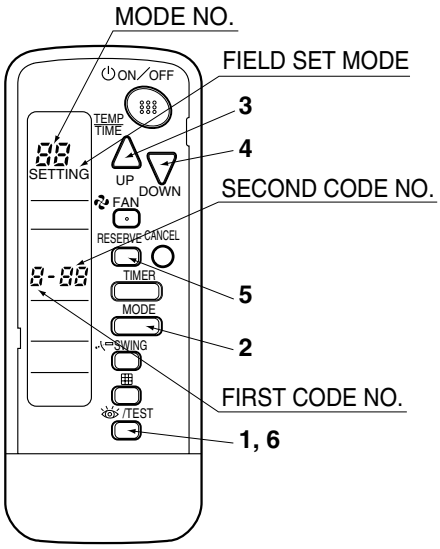

3P091240-3D

(Example)
If the time to clean air filter is set to “Filter Contamination-Heavy”, set Mode No. to “10”, FIRST CODE NO. to “0”, and SECOND CODE NO. to “02”.

<table>
<tr><th rowspan="2">MODE NO.</th><th rowspan="2">FIRST CODE NO.</th><th rowspan="2" colspan="2">DESCRIPTION OF SETTING</th><th colspan="5">SECOND CODE NO. NOTE)</th></tr>
<tr><th colspan="2">01</th><th colspan="2">02</th><th>03</th></tr>
<tr><td rowspan="6">10</td><td rowspan="3">0</td><td rowspan="3">Filter Contamination-Heavy/Light (Setting for spacing time of display time to clean air filter) (Setting for when filter contamination is heavy, and spacing time of display time to clean air filter is to be halved)</td><td>Ultra-long-life type</td><td rowspan="3">light</td><td>approx. 10,000 hours</td><td rowspan="3">heavy</td><td>approx. 5,000 hours</td><td rowspan="3">-</td></tr>
<tr><td>Long-life type</td><td>approx. 2,500 hours</td><td>approx. 1,250 hours</td></tr>
<tr><td>Standard type</td><td>approx. 200 hours</td><td>approx. 100 hours</td></tr>
<tr><td>1</td><td colspan="2">Long-life filter type (Setting of filter sign indication time)
(Change setting when Ultra long-life filter is installed)</td><td colspan="2">Long-life filter</td><td colspan="2">Ultra long-life filter (1)</td><td>-</td></tr>
<tr><td>3</td><td colspan="2">Spacing time of display time to clean air filter count
(Setting for when the filter sign is not to be displayed)</td><td colspan="2">Display</td><td colspan="2">Do not display</td><td>-</td></tr>
<tr><td>11 (Split system)</td><td>0</td><td colspan="2">Setting the number of connected simultaneous operation system indoor units.</td><td colspan="2">Pair</td><td colspan="2">Twin</td><td>Triple</td></tr>
<tr><td rowspan="2">12 (VRV system)</td><td>1</td><td colspan="2">ON/OFF input from outside (Set to enable starting/stopping from remote.)</td><td colspan="2">Forced OFF input</td><td colspan="2">ON/OFF</td><td>-</td></tr>
<tr><td>2</td><td colspan="2">Thermostat differential changeover (Set when using remote controller thermostat sensor.)</td><td colspan="2">1°C</td><td colspan="2">0.5°C</td><td>-</td></tr>
<tr><td rowspan="3">13</td><td>0</td><td colspan="2">High ceiling setting (Setting for when installed in a ceiling higher than 2.7 m)</td><td colspan="2">Normal</td><td colspan="2">High Ceiling 1</td><td>High Ceiling 2</td></tr>
<tr><td>1</td><td colspan="2">Selection of Air Flow Direction (Setting for when a blocking pad kit has been installed)</td><td colspan="2">F</td><td colspan="2">T</td><td>W</td></tr>
<tr><td>4</td><td colspan="2">Air Flow Direction Range Setting</td><td colspan="2">Upper</td><td colspan="2">Normal</td><td>-</td></tr>
</table>

NOTE
- The SECOND CODE NO. is factory set to “01”. However, for the following cases it is set to “02”.
  - Air Flow Direction Range Setting

Do not use any settings not listed in the table.
For group control with a wireless remote controller, initial settings for all the indoor units of the group are equal.
(For group control, refer to the installation manual attached to the indoor unit for group control.)

3P091240-3D

5. TEST OPERATION

- Perform test operation according to the instructions in the installation manual attached to the indoor unit.
- After refrigerant piping, drain piping, and electric wiring, operate according to the table to protect the unit.

[PRECAUTIONS]

1. Refer to malfunction diagnosis label attached to the unit if it does not operate.
2. Refer to the installation manual attached to the outdoor unit for individual operation system types.

Order	Operation
(1)	Open gas side stop valve.
(2)	Open liquid side stop valve.
(3)	Electrify crank case heater for 6 hours. (Not necessary for cooling type units)
(4)	Set to cooling with the remote controller and push ON/OFF button to start operation.
(5)	Push /TEST button twice and operate in TEST OPERATION mode for 3 minutes.
(6)	Push SWING button and confirm its operation.
(7)	Push /TEST button and operate normally.
(8)	Confirm its function according to the operation manual.

3P091240-3D

1.3 BRC7F634F / BRC7F635F (for FXFQ-P)

1.3.1 Features

BRC7F632F (for SkyAir Heat Pump)
BRC7F633F (for SkyAir Cooling Only)
BRC7F634F (for *VRV* Heat Pump)
BRC7F635F (for *VRV* Cooling Only)

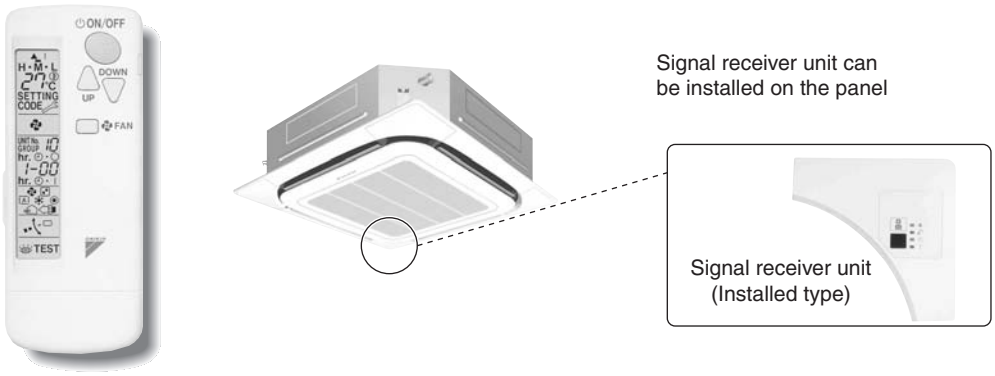

- The same operation modes and settings as with wired remote controllers are possible.
- A light receiver unit for a Ceiling Mounted Cassette (Round Flow) type is mounted into the indoor unit.
- This unit supports the three-speed airflow rate control (HH / H / L).

1.3.2 Function

Model	SkyAir Heat Pump	SkyAir Cooling Only	*VRV* Heat Pump	*VRV* Cooling Only
	BRC7F632F	BRC7F633F	BRC7F634F	BRC7F635F
ON/OFF	√			
Temp. setting	√			
Air flow rate setting	√			
Air flow direction setting	√			
Timer setting	√			
Mode setting	√			
Filter sign reset	√			
Inspection/Test operation	√			

1.3.3 Dimensions

Unit (mm)

• REMOTE CONTROLLER DIMENSIONS

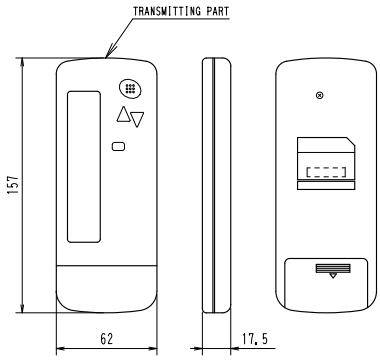

• REMOTE CONTROLLER HOLDER INSTALLATION PROCEDURE
< INSTALLATION TO WALL SURFACE >

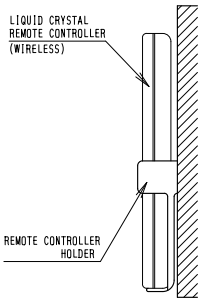

• RECEIVER INSTALLATION PROCEDURE

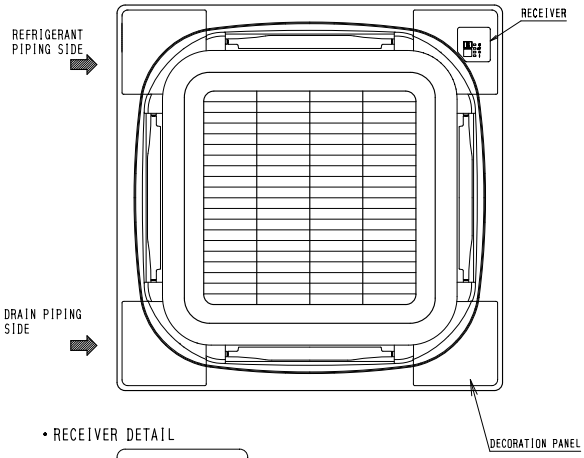

• RECEIVER DETAIL

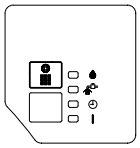

• WIRELESS REMOTE CONTROLLER KIT FOR EACH DECORATION PANEL

WIRELESS REMOTE CONTROLLER KIT	DECORATION PANEL
BRC7F632F BRC7F633F BRC7F634F BRC7F635F	BYCP125K-W1
BRC7F634F1	BYCP125KW1C(9)

3D052918D

1.3.4 Operation Manual

■ Names and Functions of the Operating Section

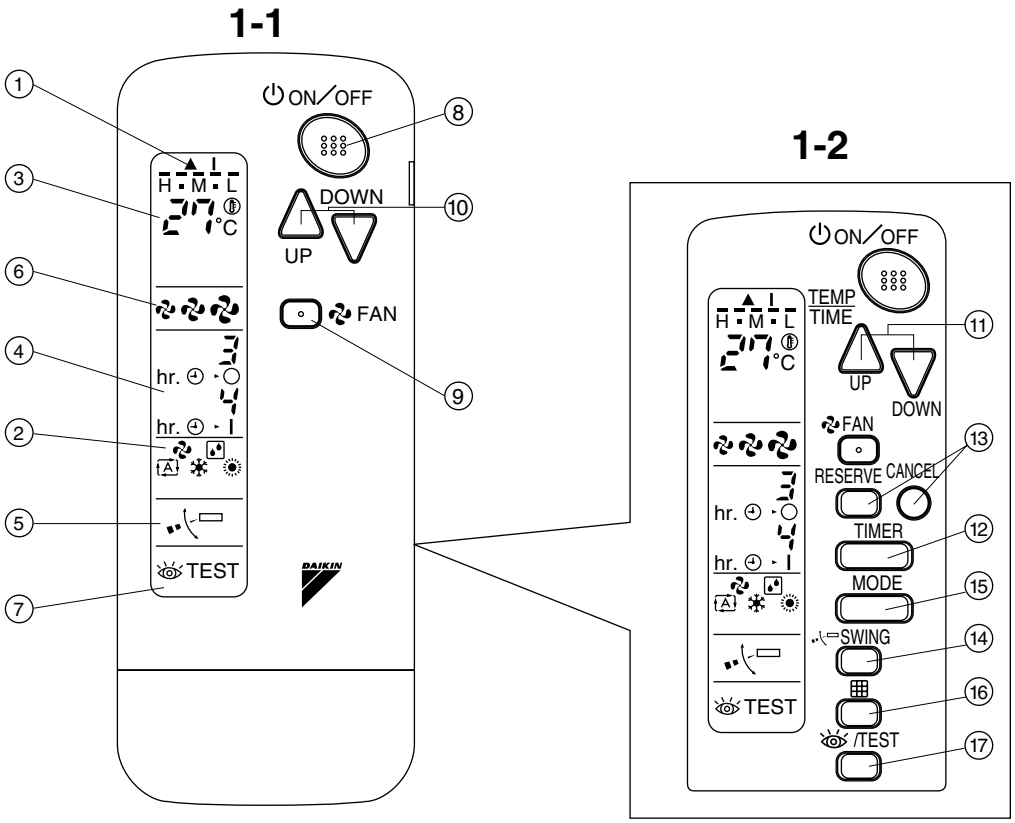

1

COOL/HEAT CHANGEOVER REMOTE CONTROL SWITCH

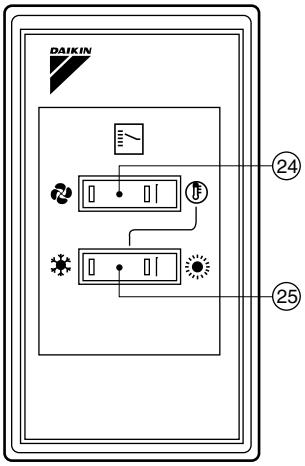

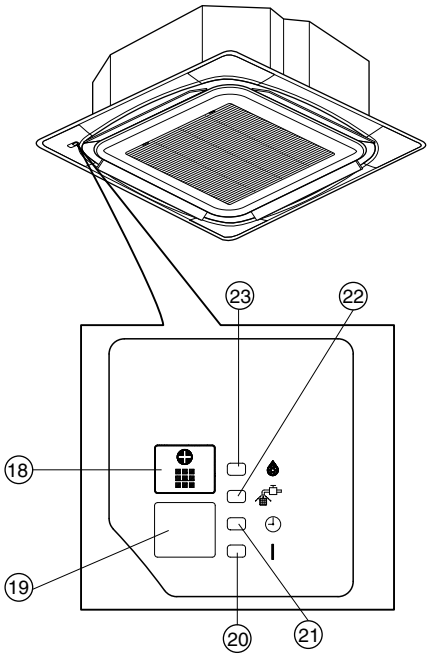

1-3

2

3P107422-28N

See Fig. 1, 2

1	**DISPLAY " ▲ " (SIGNAL TRANSMISSION)**
	This lights up when a signal is being transmitted.
2	**DISPLAY " " " " " " " " " " (OPERATION MODE)**
	This display shows the current OPERATION MODE. For cooling only type, " " (Auto) and " " (Heating) are not installed.
3	**DISPLAY " " (SET TEMPERATURE)**
	This display shows the set temperature.
4	**DISPLAY " " (PROGRAMMED TIME)**
	This display shows PROGRAMMED TIME of the system start or stop.
5	**DISPLAY " " (AIR FLOW FLAP)**
	Refer to page 65.
6	**DISPLAY " " " " " " (FAN SPEED)**
	The display shows the set fan speed.
7	**DISPLAY " TEST " (INSPECTION/ TEST OPERATION)**
	When the INSPECTION/TEST OPERATION BUTTON is pressed, the display shows the system mode is in.
8	**ON/OFF BUTTON**
	Press the button and the system will start. Press the button again and the system will stop.
9	**FAN SPEED CONTROL BUTTON**
	Press this button to select the fan speed, HH, H, L of your choice.
10	**TEMPERATURE SETTING BUTTON**
	Use this button for SETTING TEMPERATURE (Operates with the front cover of the remote controller closed.)
11	**PROGRAMMING TIMER BUTTON**
	Use this button for programming "START and/or STOP" time. (Operates with the front cover of the remote controller opened.)
12	**TIMER MODE START/STOP BUTTON**
	Refer to page 66.
13	**TIMER RESERVE/CANCEL BUTTON**
	Refer to page 66.
14	**AIR FLOW DIRECTION ADJUST BUTTON**
	Refer to page 65.
15	**OPERATION MODE SELECTOR BUTTON**
	Press this button to select OPERATION MODE.
16	**FILTER SIGN RESET BUTTON**
	Refer to the section of MAINTENANCE in the operation manual attached to the indoor unit.
17	**INSPECTION/TEST OPERATION BUTTON**
	This button is used only by qualified service persons for maintenance purposes.
18	**EMERGENCY OPERATION SWITCH**
	This switch is readily used if the remote controller does not work.
19	**RECEIVER**
	This receives the signals from the remote controller.
20	**OPERATING INDICATOR LAMP (Red)**
	This lamp stays lit while the air conditioner runs. It flashes when the unit is in trouble.
21	**TIMER INDICATOR LAMP (Green)**
	This lamp stays lit while the timer is set.
22	**AIR FILTER CLEANING TIME INDICATOR LAMP (Red)**
	Lights up when it is time to clean the air filter.

3P107422-28N

23	**DEFROST LAMP (Orange)**
	Lights up when the defrosting operation has started. (For cooling only type this lamp does not turn on.)
24	**FAN/AIR CONDITIONING SELECTOR SWITCH**
	Set the switch to " " (FAN) for FAN and " " (A/C) for HEAT or COOL.
25	**COOL/HEAT CHANGEOVER SWITCH**
	Set the switch to " " (COOL) for COOL and " " (HEAT) for HEAT.

NOTES

- For the sake of explanation, all indications are shown on the display in Figure 1 contrary to actual running situations.
- Fig. 1-2 shows the remote controller with the front cover opened.
- Fig. 1-3 shows this remote controller can be used in conjunction with the one provided with the *VRV* system.
- If the air filter cleaning time indicator lamp lights up, clean the air filter as explained in the operation manual provided with the indoor unit.
  After cleaning and reinstalling the air filter, press the filter sign reset button on the remote controller. The air filter cleaning time indicator lamp on the receiver will go out.
- The Defrost Lamp will flash when the power is turned on. This is not a malfunction.

■ Handling for Wireless Remote Controller

Precautions in handling remote controller

Direct the transmitting part of the remote controller to the receiving part of the air conditioner.

If something blocks the transmitting and receiving path of the indoor unit and the remote controller as curtains, it will not operate.

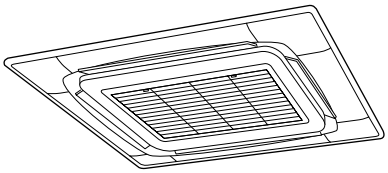

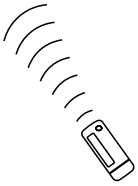

2 short beeps from the receiver indicates that the transmission is properly done.

Transmitting distance is approximately 7 m.

Do not drop or get it wet.

It may be damaged.

Never press the button of the remote controller with a hard, pointed object.

The remote controller may be damaged.

Installation site

- It is possible that signals will not be received in rooms that have electronic fluorescent lighting. Please consult with the salesman before buying new fluorescent lights.
- If the remote controller operated some other electrical apparatus, move that machine away or consult your dealer.

3P107422-28N

Placing the remote controller in the remote controller holder

Install the remote controller holder to a wall or a pillar with the attached screw. (Make sure it transmits)

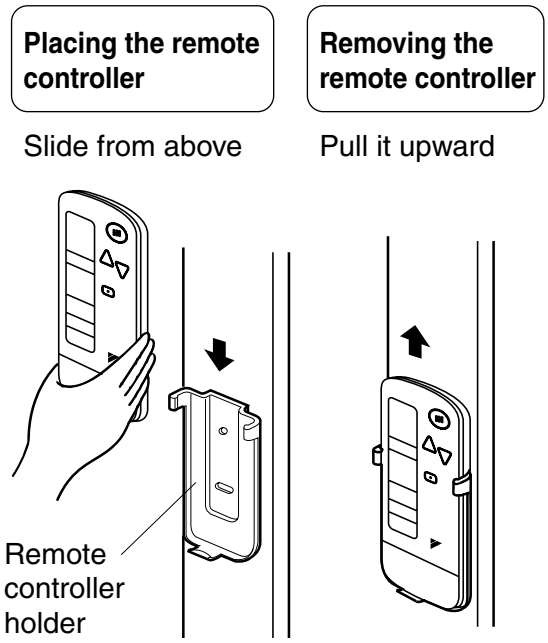

How to put the dry batteries

(1) Remove the back cover of the remote controller to the direction pointed by the arrow mark.
(2) Put the batteries
Use two LR03 <IEC> dry cell batteries.
Put dry batteries correctly to fit their (+) and (–).
(3) Close the cover

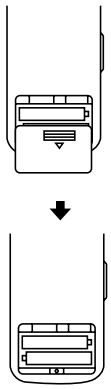

When to change batteries

Under normal use, batteries last about a year. However, change them whenever the indoor unit doesn't respond or responds slowly to commands, or if the display becomes dark.

[CAUTIONS]

- Replace all batteries at the same time, do not use new and old batteries intermixed.
- In case the remote controller is not used for a long time take out all batteries in order to prevent liquid leak of the battery.

IN THE CASE OF CENTRALIZED CONTROL SYSTEM

If the indoor unit is under centralized control, it is necessary to switch the remote controller's setting.
In this case, contact your DAIKIN dealer.

3P107422-28N

■ Operation Range

Split System

If the temperature or the humidity is beyond the following conditions, safety devices may work and the air conditioner may not operate, or sometimes, water may drop from the indoor unit.

COOLING [°C]

INDOOR			OUTDOOR TEMPERATURE	
TEMPERATURE		HUMIDITY		
DB	21 to 35	80% or below	DB	– 5 to 50
WB	14 to 25			

HEATING [°C]

INDOOR TEMPERATURE		OUTDOOR TEMPERATURE	
DB	15 to 27	DB	– 14 to 21
		WB	– 15 to 15.5

DB : Dry bulb temperature
WB: Wet bulb temperature

The setting temperature range of the remote controller is 16°C to 32°C.

***VRV* System**

See the operation manual provided with the air conditioner.

■ Operation Procedure

Refer to figure 1 on page 58

- Operating procedure varies with heat pump type and cooling only type. Contact your Daikin dealer to confirm your system type.
- To protect the unit, turn on the main power switch 6 hours before operation.
- If the main power supply is turned off during operation, operation will restart automatically after the power turns back on again.

COOLING, HEATING, AUTOMATIC, FAN, AND PROGRAM DRY OPERATION

Operate in the following order.

- AUTOMATIC OPERATION can be selected only by Heat pump split system or Heat recovery *VRV* system.
- For cooling only type, “COOLING”, and “FAN” and “DRY” operation are able to select.

(1) For Systems Without Cool / Heat Changeover Remote Control Switch
Refer to figure 1-1, 2 on page 58

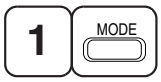

OPERATION MODE SELECTOR

Press OPERATION MODE SELECTOR button several times and select the OPERATION MODE of your choice as follows.

- COOLING OPERATION ..... “ ❄ ”
- HEATING OPERATION..... “ ☀ ”
- AUTOMATIC OPERATION ..... “ A ”
  - In this operation mode, COOL/HEAT changeover is automatically conducted.
- FAN OPERATION ..... “ ”
- DRY OPERATION..... “ ”
  - The function of this program is to decrease the humidity in your room with the minimum temperature decrease.
  - The set point is the air temperature when starting operation by dry operation.
  - Micro computer automatically determines TEMPERATURE and FAN SPEED.
  - This system does not go into operation if the room temperature is below 16°C.

3P107422-28N

ON/OFF

Press ON/OFF button.
OPERATION lamp lights up or goes off and the system starts or stops OPERATION.

NOTE
- Do not turn OFF power immediately after the unit stops. Then, wait no less than 5 minutes. Water is leaking or there is something else wrong with the unit.

(2) For Systems with Cool/Heat Changeover Remote Control Switch
Refer to figure 1-1,3 on page 58

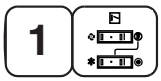

OPERATION MODE SELECTOR

(1) Select OPERATION MODE with the COOL/HEAT CHANGEOVER REMOTE CONTROL SWITCH as follows.

- COOLING OPERATION..... “ ”
- HEATING OPERATION..... “ ”
- FAN OPERATION ..... “ ”
- DRY OPERATION..... “ ”
  - See “FOR SYSTEM WITHOUT COOL/HEAT CHANGEOVER REMOTE CONTROL SWITCH” for details on dry operation.

(2) Press OPERATION MODE SELECTOR button several times and select “ ”.
(This operation is only available during dry operation.)

ON/OFF

Press ON/OFF button.
OPERATION lamp lights up or goes off and the system starts or stops OPERATION.
- The fan may keep on running for about 1 minute after the heating operation stops for removing the heat in the indoor unit.
- The air flow rate may be adjusted automatically depending on the room temperature or the fan may stop immediately. This is not a malfunction.

NOTE
- Do not turn OFF power immediately after the unit stops. Then, wait no less than 5 minutes. Water is leaking or there is something else wrong with the unit.

[EXPLANATION OF HEATING OPERATION]
- For general heating operation, it may take longer to reach the set temperature than in cooling operation. We recommend starting the operation which was used before using timer operation.

DEFROST OPERATION
- As the frost on the coil of an outdoor unit increase, heating effect decreases and the system goes into DEFROST OPERATION.
- The fan operation stops and the DEFROST lamp of the indoor unit goes on.
  After 6 to 8 minutes (maximum 10 minutes) of DEFROST OPERATION, the system returns to HEATING OPERATION.

3P107422-28N

Heating capacity & Outdoor air temperature

- Heating capacity drops as outdoor air temperature lowers. If feeling cold, use another heater at the same time as this air conditioner.
- Hot air is circulated to warm the room. It will take some time from when the air conditioner is first started until the entire room becomes warm. The internal fan automatically turns at low speed until the air conditioner reaches a certain temperature on the inside. In this situation, all you can do is wait.
- If hot air accumulates on the ceiling and feet are left feeling cold, it is recommended to use a circulator. For details, contact the place of purchase.

(3) Adjustment

For programming TEMPERATURE, FAN SPEED and AIR FLOW DIRECTION, follow the procedure shown below.

TEMPERATURE SETTING

Press TEMPERATURE SETTING button and program the setting temperature.

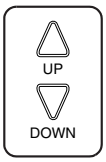

Each time this button is pressed, setting temperature rises 1°C.

Each time this button is pressed, setting temperature lowers 1°C.

In case of automatic operation

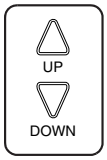

Each time this button is pressed, setting temperature shifts to “H” side.

Each time this button is pressed, setting temperature shifts to “L” side.

[°C]

	H	•	M	•	L
Setting temperature	25	23	22	21	19

- The setting is impossible for fan operation.

NOTE

- The setting temperature range of the remote controller is 16°C to 32°C.

FAN SPEED CONTROL

Press FAN SPEED CONTROL button.

Fan speed (HH, H, L) can be selected.

The microchip may sometimes control the fan speed in order to protect the unit.

3P107422-28N

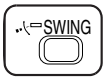

AIR FLOW DIRECTION ADJUST

UP AND DOWN DIRECTION

- The movable limit of the flap is changeable. Contact your Daikin dealer for details.

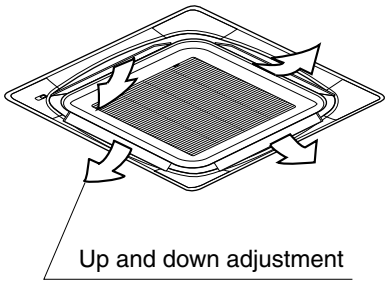

Press the AIR FLOW DIRECTION ADJUST button to select the air direction as shown below.

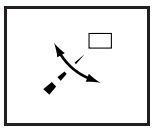

DISPLAY appears and the air flow direction continuously varies. (Automatic swing setting)

Press AIR FLOW DIRECTION ADJUST button to select the air direction of your choice.

DISPLAY vanishes the air flow direction is fixed (Fixed air flow direction setting).

MOVEMENT OF THE AIR FLOW FLAP

For the following conditions, micro computer controls the air flow direction so it may be different from the display.

Operation mode	Cooling	Heating
Operation conditions	● When operating continuously at horizontal air flow direction	● When room temperature is higher than the set temperature ● At defrost operation (The flaps blow horizontally to avoid blowing cold air directly on the occupants of the room.)

NOTES

- If you try cooling or programmed drying, while the flaps are facing downward, air flow direction may change unexpectedly. There is nothing wrong with the equipment. This serves to prevent dew formed on parts in the air discharge outlet from dripping.
- Operation mode includes automatic operation.

(4) Program Timer Operation

Operate in the following order.

- The timer is operated in the following two ways.
  Programming the stop time (◷ ▸ ◯)
  .... The system stops
  operating after the set time has elapsed.
  Programming the start time (◷ ▸ |)
  .... The system starts
  operating after the set time has elapsed.
- The timer can be programmed a maximum of 72 hours.
- The start and the stop time can be simultaneously programmed.

3P107422-28N

TIMER MODE START/STOP

Press the TIMER MODE START/STOP button several times and select the mode on the display.
The display flashes.
For setting the timer stop .... " ◷ ▸ ◯ "
For setting the timer start .... " ◷ ▸ | "

PROGRAMMING TIME

Press the PROGRAMMING TIME button and set the time for stopping or starting the system.

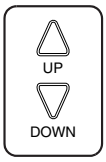

When this button is pressed, the time advances by 1 hour.

When this button is pressed, the time goes backward by 1 hour.

TIMER RESERVE

Press the TIMER RESERVE button.
The timer setting procedure ends.
The display or changes from flashing light to a constant light.

TIMER CANCEL

Press the TIMER OFF button to cancel programming. The display vanishes.

For example.
When the timer is programmed to stop the system after 3 hours and start the system after 4 hours, the system will stop after 3 hours and then 1 hour later the system will start.

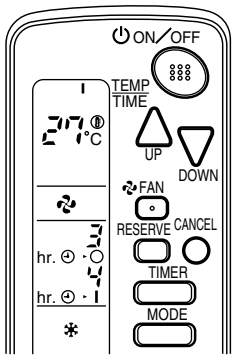

NOTES

- When the timer is programmed to stop the system after 3 hours and start the system after 4 hours, the system will stop after 3 hours and then 1 hour later the system will start.
- After the timer is programmed, the display shows the remaining time.

3P107422-28N

(5) How to Set Master Remote Controller (For *VRV* System)

- When the system is installed as shown below, it is necessary to designate the master remote controller.

■ **For Heat pump system**

When one outdoor unit is connected with several indoor units.

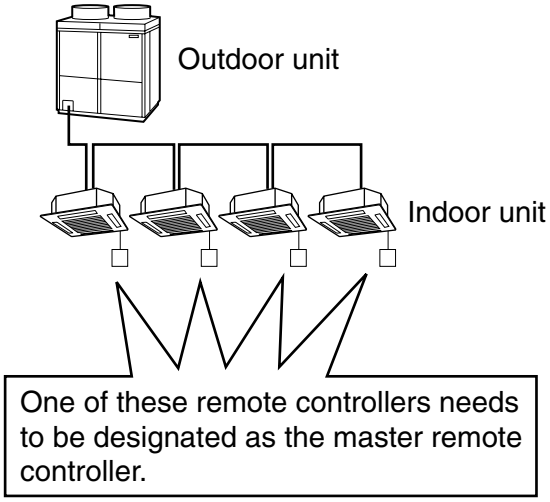

■ **For Heat recovery system**

When one BS unit is connected with several indoor units.

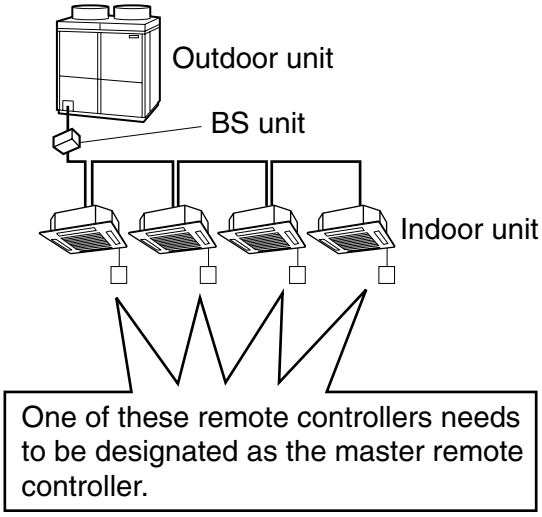

- Only the master remote controller can select HEATING, COOLING or AUTOMATIC (only Heat recovery system) OPERATION.
  When the indoor unit with master remote controller is set to “COOL”, you can switch over operation mode between “FAN”, “DRY” and “COOL”.
  When the indoor unit with master remote controller is set to “HEAT”, you can switch over operation mode between “FAN” and “HEAT”.
  When the indoor unit with master remote controller is set to “FAN”, you cannot switch operation mode.
  When attempting settings than that consented above, a “peep” is emitted as a warning.
  Only with Heat recovery system, you can set the indoor unit to AUTOMATIC. Attempting to do so, a “peep” will be emitted as a warning.

How to designate the master remote controller

Operate in the following order.

3P107422-28N

1 MODE

Continuously press the OPERATION MODE SELECTOR button for 4 seconds.

The displays showing " ⊖ " of all slave indoor unit connected to the same outdoor unit or BS unit flash.

2 MODE

Press the OPERATION MODE SELECTOR button to the indoor unit that you wish to designate as the master remote controller. Then designation is completed. This indoor unit is designated as the master remote controller and the display showing " ⊖ " vanishes.

- To change settings, repeat steps 1 and 2.

(6) Emergency Operation

When the remote controller does not work due to battery failure or the absence thereof, use this switch which is located beside the discharge grille on the main unit. When the remote controller does not work, but the battery low indicator on it is not lit, contact your dealer.

[START]

1 **To press the emergency operation switch.**

The machine runs in the previous mode.
The system operates with the previously set air flow direction.

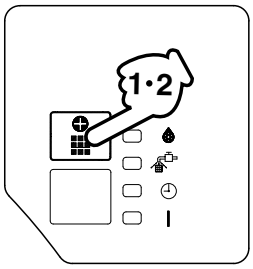

[STOP]

2 **Press the EMERGENCY OPERATION switch again.**

(7) Precautions for Group Control System or Two Remote Controller Control System

This system provides two other control systems beside individual control (one remote controller controls one indoor unit) system. Confirm the following if your unit is of the following control system type.

- **Group control system**
  One remote controller controls up to 16 indoor units.
  All indoor units are equally set.

- **Two remote controller control system**
  Two remote controllers control one indoor unit. (In case of group control system, one group of indoor units)
  The unit follows individual operation.

NOTES

- Cannot have two remote controller control system with only wireless remote controllers. (It will be a two remote controller control system having one wired and one wireless remote controllers.)
- Under two remote controller control system, wireless remote controller cannot control timer operation.
- Only the operating indicator lamp out of 3 other lamps on the indoor unit display functions.

3P107422-28N

NOTE

- Contact your Daikin dealer in case of changing the combination or setting of group control and two remote controller control systems.

■ Not Malfunction of the Air Conditioner

The following symptoms do not indicate air conditioner malfunction

I. THE SYSTEM DOES NOT OPERATE

- **The system does not restart immediately after the ON/OFF button is pressed.**
  If the OPERATION lamp lights, the system is in normal condition. It does not restart immediately because a safety device operates to prevent overload of the system. After 3 minutes, the system will turn on again automatically.
- **The system does not restart immediately when TEMPERATURE SETTING button is returned to the former position after pushing the button.**
  It does not restart immediately because a safety device operates to prevent overload of the system. After 3 minutes, the system will turn on again automatically.
- **If the reception beep is rapidly repeated 3 times (It sounds only twice when operating normally.)**
  Control is set to the optional controller for centralized control.
- **If the defrost lamp on the indoor unit's display is lit when heating is started.**
  This indication is to warn against cold air being blown from the unit. There is nothing wrong with the equipment.

II. THE UNIT STOPS ONCE IN A WHILE

- **The remote controller indicates "U4" and "U5", the unit stops. Within several minutes the unit restarts.**
  Due to electrical noise other than that from the air conditioner, the communication between the units is cut off and the unit stops.
  When the noise is gone, the unit automatically restarts.

III. NO CHANGEOVER IS AVAILABLE BETWEEN HEATING AND COOLING MODES

- **The indoor unit makes a "PEEE" receiving sound.**
  When operation changeover is under control, the control is set to the mode that cannot be carried out.

IV. AIR FLOW RATE CANNOT BE OBTAINED AS SET

- **Even if the air flow rate adjusting button is pressed, the air flow rate does not change.**
  When the room temperature reaches the indoor unit set temperature, the outdoor unit stops and the air flow rate of indoor unit drops to the minimum.
  This is to avoid the cold air from getting in contact with the people in the room.

V. AIR DISCHARGE DIRECTION IS NOT AS SET

- **The remote controller indication and the air discharge direction is not the same.**
  Air discharge direction swing is impossible.
  Because it is controlled by microcomputer. Refer to "AIR FLOW DIRECTION ADJUST" on page 65.

VI. ONLY A PART OF INDICATION SHOWS

- **Even if the unit is operated, only the operation indication shows, or even if the indication shows, soon after, the indication other than that for operation disappears.**
  The corresponding indoor unit is that for multi-system and the remote controller is set to the multi-system.

VII.NO INDICATION SHOWS OR ALL INDICATION SHOW

- **When the remote controller button is pressed.**
  The battery is dead.

VIII.INSUFFICIENT COOLING

- **It is in program dry operation.**
  The program dry operation is an operation mode trying to keep the room temperature constant as much as possible. Refer to "COOLING, HEATING, AUTOMATIC, FAN AND PROGRAM DRY OPERATION" on page 62.

3P107422-28N

■ How to Diagnose Trouble Spots

I. EMERGENCY STOP

When the air conditioner stops in emergency, the run lamp on the indoor unit starts blinking. Take the following steps yourself to read the malfunction code that appears on the display. Contact your dealer with this code. It will help pinpoint the cause of the trouble, speeding up the repair.

Press the INSPECTION/TEST button to select the inspection mode "0".

"0" appears on display and blinks. "UNIT" lights up.

Press PROGRAMMING TIMER BUTTON and change the unit number.

Press to change the unit number until the indoor unit beeps and perform the following operation according to the number of beeps.

Number of beeps

3 short beeps ..... Perform all steps from (3) to (6) .

1 short beep ..... Perform (3) and (6) steps

1 long beep ..... Normal state

Press OPERATION MODE SELECTOR BUTTON.

"0" on the left-hand of the malfunction code blinks.

Press PROGRAMMING TIMER BUTTON and change the malfunction code.

Press until the indoor unit beeps twice.

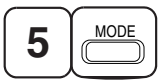

Press OPERATION MODE SELECTOR BUTTON.

"0" on the right-hand of the malfunction code blinks.

Press PROGRAMMING TIMER BUTTON and change the malfunction code.

Press until the indoor unit makes a long beep.

The malfunction code is fixed when the indoor unit makes a long beep.

3P107422-28N

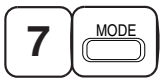

Reset of the display

Press OPERATION MODE SELECTOR BUTTON to get the display back to the normal state.

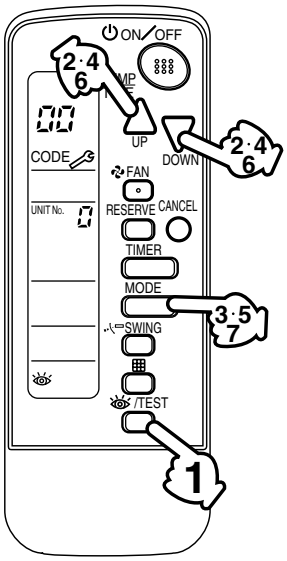

II. IN CASE BESIDES EMERGENCY STOP

1. The unit does not operate at all.

- Check if the receiver is exposed of sunlight or strong light. Keep receiver away from light.
- Check if there are batteries in the remote controller. Place the batteries.
- Check if the indoor unit number and wireless remote controller number are equal.

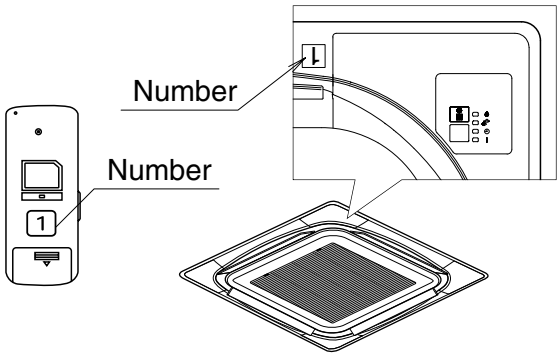

Operate the indoor unit with the remote controller of the same number.
Signal transmitted from a remote controller of a different number cannot be accepted. (If the number is not mentioned, it is considered as “1”)

2. The system operates but it does not sufficiently cool or heat.

- If the set temperature is not proper.
- If the FAN SPEED is set to LOW SPEED.
- If the air flow angle is not proper.

Contact the place of purchase in the following case.

WARNING When you detect a burning odor, shut OFF power immediately and contact the place of purchase. Using the equipment in anything but proper working condition can result in equipment damage, electric shock and/or fire.

3P107422-28N

[Trouble]
The RUN lamp of the indoor unit is flashing and the unit does not work at all.

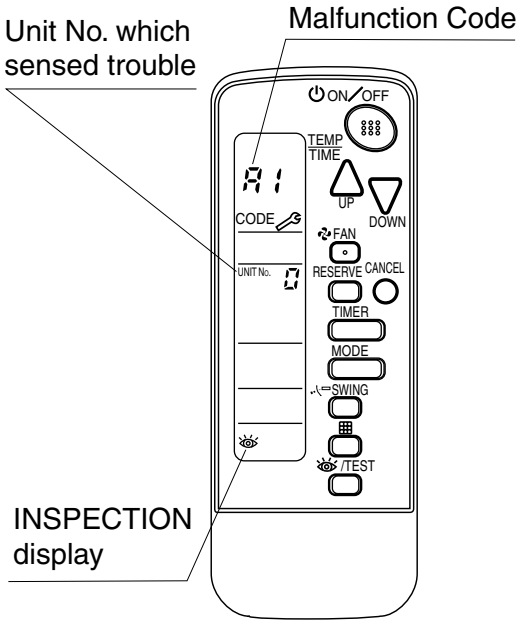

[Remedial action]
Check the malfunction code (A1 - UF) on the remote control and contact the place of purchase. (See page 70.)

3P107422-28N

1.3.5 Installation Manual

■ Safety Precautions

Please read these “SAFETY PRECAUTIONS” carefully before installing air conditioning unit and be sure to install it correctly.
After completing installation, conduct a trial operation to check for faults and explain to the customer how to operate the air conditioner and take care of it with the aid of the operation manual. Ask the customer to store the installation manual along with the operation manual for future reference.

Meaning of CAUTION notices

CAUTION Failure to observe these instructions properly may result in property damage or personal injury, which may be serious depending on the circumstances.

CAUTION

- Refer also to the installation manual attached to the indoor unit and the installation manual attached to the decoration panel.
- Confirm that following conditions are satisfied prior to installation.
  - Ensure that noting interrupts the operation of the wireless remote controller. (Ensure that there is neither a source of light nor fluorescent lamp near the receiver. Also, ensure that the receiver is not exposed of direct sun light.)
  - Ensure that the operation display lamp and other indicators are easy to see.
- The installation position of this kit is 1 position of the decoration panel. Therefore, confirm that its position is set so that the single form the wireless remote controller can be easily transmitted and its display can be easily seen.
- If both this kit and fresh air intake kit are installed, only one duct chamber shall be used. Refer to the installation manual of the fresh air intake kit (Option Handbook).

■ Before Installation

(1) Accessories

Check if the following accessories are included with your unit.

Name	Receiver	Wireless remote controller	Transmission	Remote controller holder	Screw for installing transmission	Screw for installing remote controller holder
Quantity	1 set	1 pc.	1 set	1 pc.	2 pcs.	2 pcs.
Shape						

Name	Clamp	Dry cell battery LR03 (AM4)	Unit No. label	Field setting label	Operation manual	Installation manual
Quantity	1 pc.	2 pcs.	1 pc.	1 pc.	1 pc.	1 pc.
Shape			1 2 3 1 2 3 1 2 3			

(2) Note to the Installer

- Be sure to instruct the customer how to properly operate the system showing him/her the attached operation manual.

3P091240-4F

■ Remote Controller Installation

NOTES

- Do not throw the remote controller or impose large shocks. Also, do not store where it may be exposed to moisture or direct sunlight.
- When operating, point the transmitting part of the remote controller in the direction of the receiver.
- The direct transmitting distance of the remote controller is approximately 7 meters.
- The signal cannot be transmitted if something such as curtains blocks the receiver and the remote controller.

- **When attaching in a wall or a pillar**

1. Fix the remote controller holder with the screws.

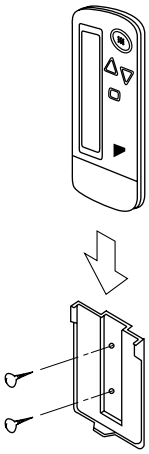

2. Slide the remote controller into the remote controller holder from the top.

- **How to insert the batteries**

1. Open the back cover of the remote controller by sliding it in the direction of the arrow.

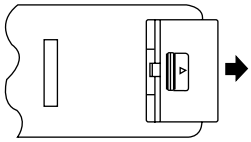

2. Insert the attached dry cell batteries. Properly insert, set the batteries by matching the (+) and (–) polarity marks as indicated. Then close the cover as before.

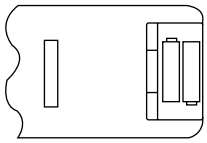

■ Address Set Up

Determination of address and MAIN/SUB remote controller.

If setting multiple wireless remote controllers to operate in one room, perform address setting for the receiver and the wireless remote controller.

If setting multiple wired remote controllers in one room, change the MAIN/SUB switch of the receiver.

SETTING PROCEDURE

(1) Setting the receiver

Set the wireless address switch (SS2) on the printed circuit board according to the table below.

Unit No.	No. 1	No. 2	No. 3
Wireless address switch (SS2)	1 2 3	1 2 3	1 2 3

When using both a wired and a wireless remote controller for 1 indoor unit, the wired controller should be set to MAIN. Therefore, set the MAIN/SUB switch (SS1) of the receiver to SUB.

	MAIN	SUB
MAIN/SUB switch (SS1)	S M	S M

3P091240-4F

(2) Setting the address of wireless remote controller (It is factory set to " 1 ")

〈Setting from the remote controller〉

1. Hold down the [ ] button and the [/TEST] button for at least 4 seconds to get the Field Set mode.
   (Indicated in the display area in the figure at right.)
2. Press the [FAN] button and select a multiple setting (A/b). Each time the button is pressed the display switches between "A" and "b".
3. Press the " UP " button or " DOWN " button to set the address.

   1 → 2 → 3 → 4 → 5 → 6

   Address can be set from 1 to 6, but set it to 1 ~ 3 and to same address as the receiver. (The receiver does not work with address 4 ~ 6.)
4. Press the [RESERVE] button to enter the setting.
5. Hold down the [/TEST] button for at least 1 second to quit the Field Set mode and return to the normal display.

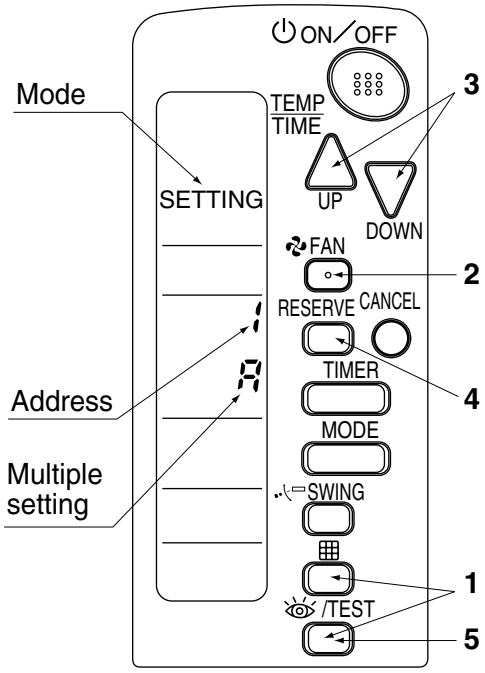

Multiple settings A/b

When the indoor unit is being operating by outside control (central remote controller, etc.), it sometimes does not respond to ON/OFF and temperature setting commands from this remote controller. Check what setting the customer wants and make the multiple setting as shown below.

Remote controller		Movement when the operation is controlled by the other air conditioners and equipment
Multiple setting	Remote controller display	
A: Standard	All items displayed.	When operation changeover, temperature setting or the like is carried out from the remote controller, the indoor unit rejects the instruction. (Signal receiving sound "peeh" or "pick-pick-pick") As a result, a discrepancy between the operation state of the indoor unit and the indication of the remote controller display occurs.
b: Multi System	Operations remain displayed shortly after execution.	Since the indication of the remote controller is turned off, no discrepancy such as mentioned above occurs.

(3) Stick the Unit No. label on the air outlet of the decoration panel and the back of the wireless remote controller.

[PRECAUTIONS]

Set the Unit No. of the receiver and the wireless remote controller to be equal. If the settings differ, the signal from the remote controller cannot be transmitted.

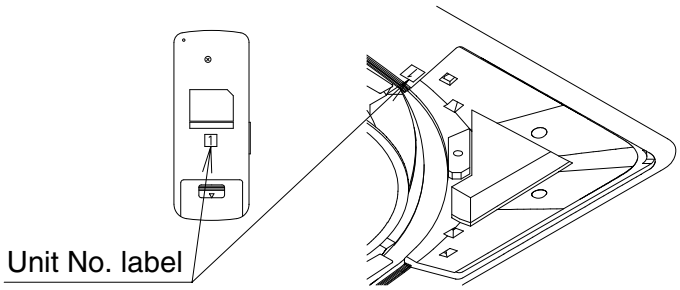

<Attachment of Unit No. label>

3P091240-4F

■ Installation of the Transmission

1. Remove the lid of the terminal box as described in the Installation Manual supplied with the indoor unit.
2. Fix the transmission at the bottom of the bell mouths on the indoor unit body using provided transmission fixing screws as shown below.
3. Connect the wire harness (shorter one) from the transmission to X24A connector on the printed circuit board in the indoor unit. Bring out the wire harness (longer one) from the transmission to outside of the unit through the field wiring pathway (low voltage side) of the indoor unit.
4. Fix two wire harnesses from the transmission using provided clamps.

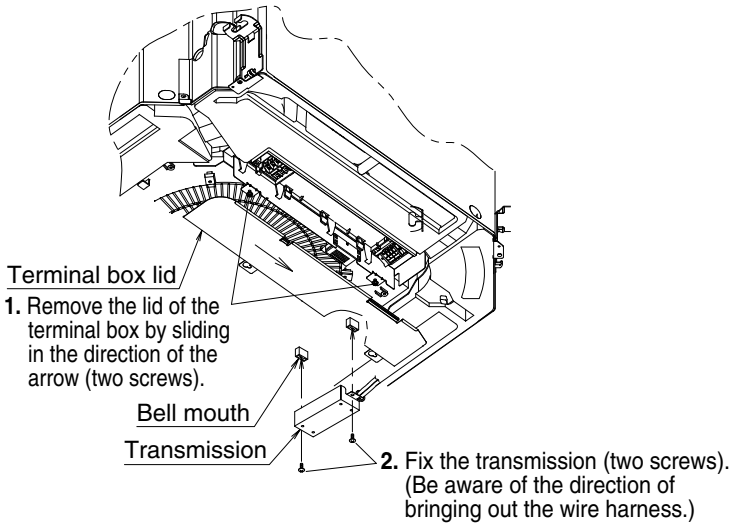

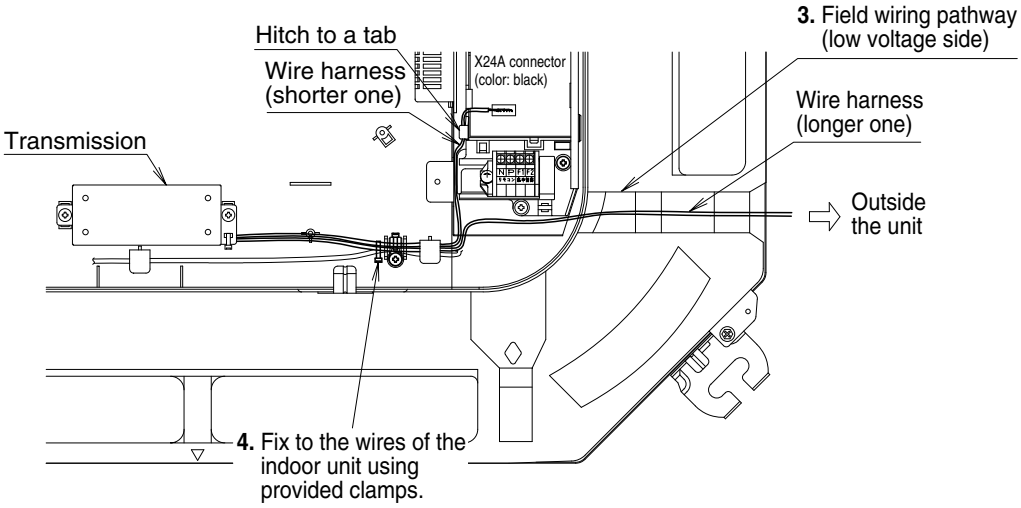

■ Installation of the Decoration Panel

Install the decoration panel as described in the Installation Manual supplied with the decoration panel.

NOTE

- Watch that the wire harness (longer one) from the transmission is not caught between the indoor unit and the decoration panel, and ceiling and the decoration panel.

3P091240-4F

■ Installation of the Receiver

1. Remove the corner decoration lid of the decoration panel, locating at the opposing corner of the drain piping section. The lid will be no longer in use.

Be sure to install the receiver to this corner.

2. Remove a backside cover of the receiver.
3. Connect the wire harness (longer one) from the transmission to the connector of the printed circuit board of the receiver.
4. Attach the backside cover of the receiver in reverse procedure to **2**.
5. Install the receiver to the decoration panel.

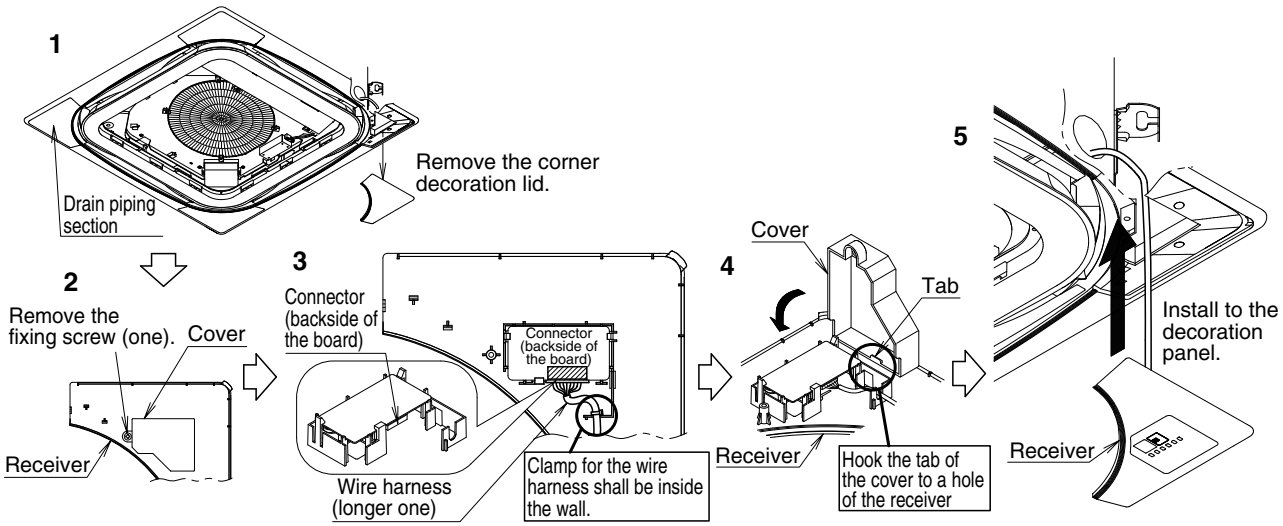

■ Field Setting

If optional accessories are mounted on the indoor unit, the indoor unit setting may have to be changed. Refer to the instruction manual (optional hand book) for each optional accessory.

Procedure

1. When in the normal mode, press the /TEST button for a minimum of four seconds, and the FIELD SET MODE is entered.
2. Select the desired MODE NO. with the MODE button.
3. Push the " UP " button and select the FIRST CODE NO.
4. Push the " DOWN " button and select the SECOND CODE NO.
5. Push the RESERVE button and the present settings are SET.
6. Push the /TEST button to return to the NORMAL MODE.

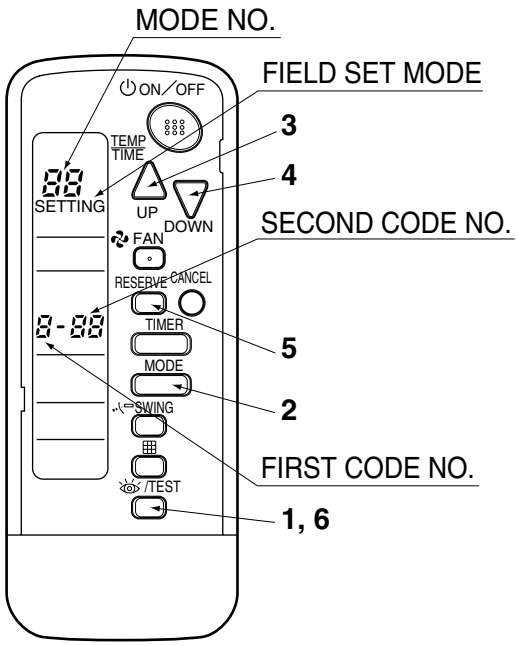

3P091240-4F

(Example)
If the time to clean air filter is set to “Filter Contamination-Heavy”, set Mode No. to “10”, FIRST CODE NO. to “0”, and SECOND CODE NO. to “02”.

<table>
<tr><th rowspan="2">MODE NO.</th><th rowspan="2">FIRST CODE NO.</th><th rowspan="2" colspan="2">DESCRIPTION OF SETTING</th><th colspan="5">SECOND CODE NO. NOTE)</th></tr>
<tr><th colspan="2">01</th><th colspan="2">02</th><th>03</th></tr>
<tr><td rowspan="5">10</td><td rowspan="3">0</td><td rowspan="3">Filter Contamination-Heavy/Light (Setting for spacing time of display time to clean air filter) (Setting for when filter contamination is heavy, and spacing time of display time to clean air filter is to be halved)</td><td>Ultra-long-life type</td><td rowspan="3">light</td><td>approx. 10,000 hours</td><td rowspan="3">heavy</td><td>approx. 5,000 hours</td><td rowspan="3">-</td></tr>
<tr><td>Long-life type</td><td>approx. 2,500 hours</td><td>approx. 1,250 hours</td></tr>
<tr><td>Standard type</td><td>approx. 200 hours</td><td>approx. 100 hours</td></tr>
<tr><td>1</td><td colspan="2">Long-life filter type (Setting of filter sign indication time) (Change setting when Ultra long-life filter is installed)</td><td colspan="2">Long-life filter</td><td colspan="2">Ultra long-life filter</td><td>-</td></tr>
<tr><td>3</td><td colspan="2">Spacing time of display time to clean air filter count (Setting for when the filter sign is not to be displayed)</td><td colspan="2">Display</td><td colspan="2">Do not display</td><td>-</td></tr>
<tr><td rowspan="3">13</td><td>0</td><td colspan="2">High ceiling setting (Setting for when installed in a ceiling higher than 2.7 m)</td><td colspan="2">Normal</td><td colspan="2">High Ceiling 1</td><td>High Ceiling 2</td></tr>
<tr><td>1</td><td colspan="2">Selection of Air Flow Direction (Setting for when a blocking pad kit has been installed)</td><td colspan="2">F</td><td colspan="2">T</td><td>W</td></tr>
<tr><td>4</td><td colspan="2">Air Flow Direction Range Setting</td><td colspan="2">Upper</td><td colspan="2">Normal</td><td>-</td></tr>
</table>

NOTE

- The SECOND CODE NO. is factory set to “01”. However, for the following cases it is set to “02”.
  - Air Flow Direction Range Setting

Do not use any settings not listed in the table.
For group control with a wireless remote controller, initial settings for all the indoor units of the group are equal. (For group control, refer to the installation manual attached to the indoor unit for group control.)

■ Test Operation

- Perform test operation according to the instructions in the installation manual attached to the indoor unit.
- After refrigerant piping, drain piping, and electric wiring, operate according to the table to protect the unit.

[PRECAUTIONS]

1. Refer to malfunction diagnosis in the installation manual attached to the indoor unit for split types.
2. Refer to malfunction diagnosis in the installation manual attached to the outdoor unit for *VRV* system types.

Order	Operation
(1)	Open gas side stop valve.
(2)	Open liquid side stop valve.
(3)	Electrify crank case heater for 6 hours. (Not necessary for cooling type units)
(4)	Set to cooling with the remote controller and push ON/OFF button to start operation.
(5)	Push /TEST button twice and operate in TEST OPERATION.
(6)	Push SWING button and confirm its operation.
(7)	Push /TEST button and operate normally.
(8)	Confirm its function according to the operation manual.

3P091240-4F

1.4 BRC4C61 / BRC4C62 / BRC4C63 / BRC4C64 (for FXK(Q), FXD, FXDYQ, FXS, FXSYQ, FXM, FXMQ-M(A), FXL(Q), FXN(Q), FXYD, FXYB)

1.4.1 Features

Signal receiver unit

1.4.2 Dimensions

Unit (mm)

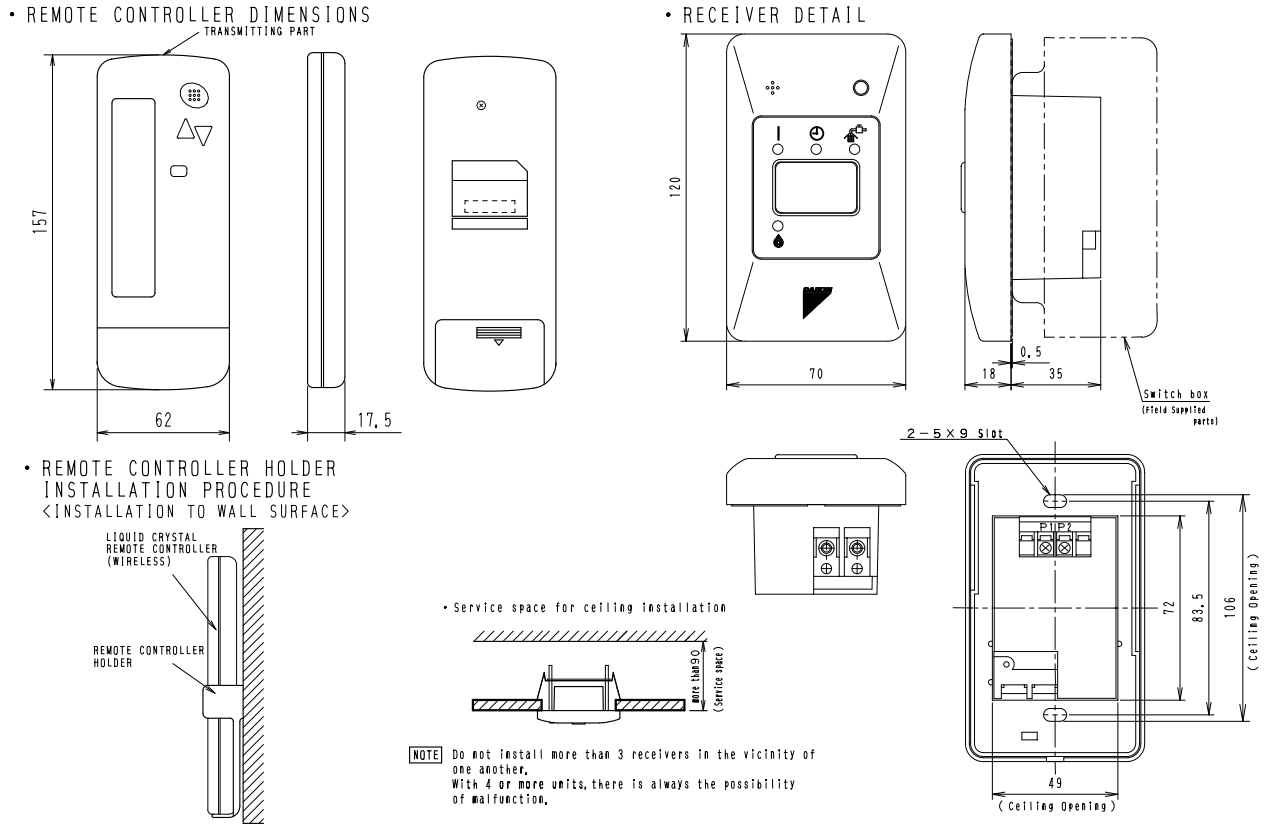

3D007898B

1.4.3 Operation Manual

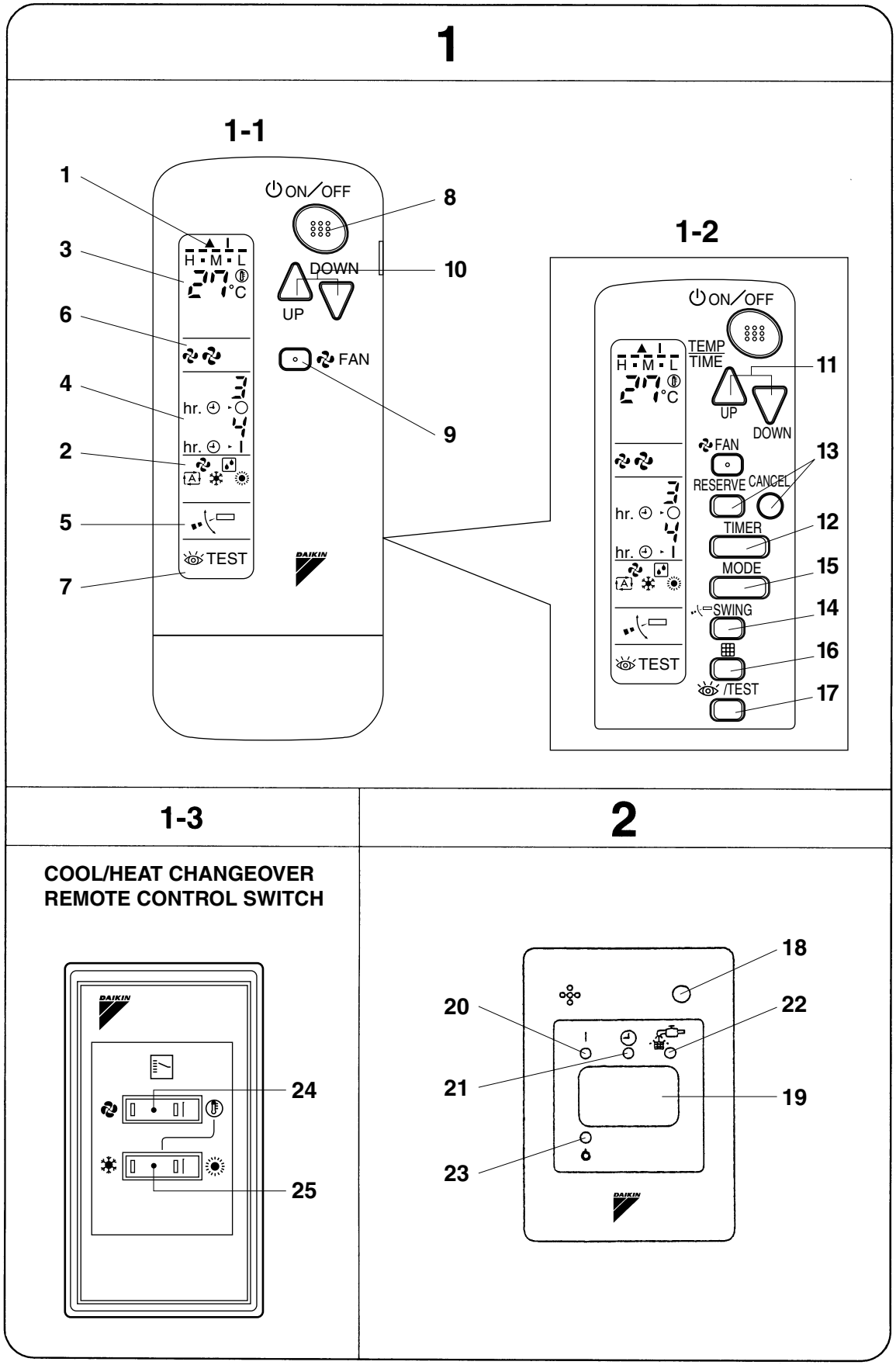

3P107422-21S

3

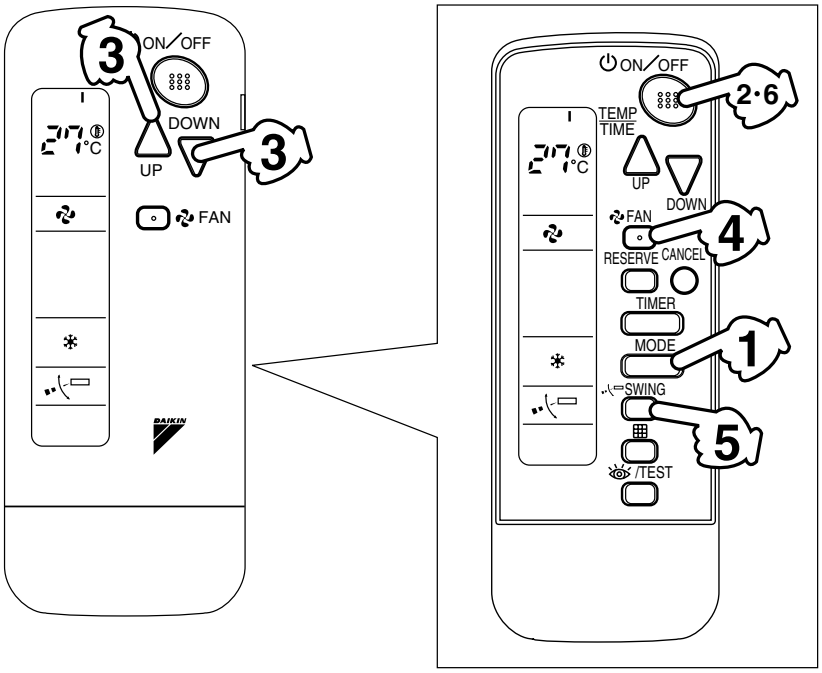

4

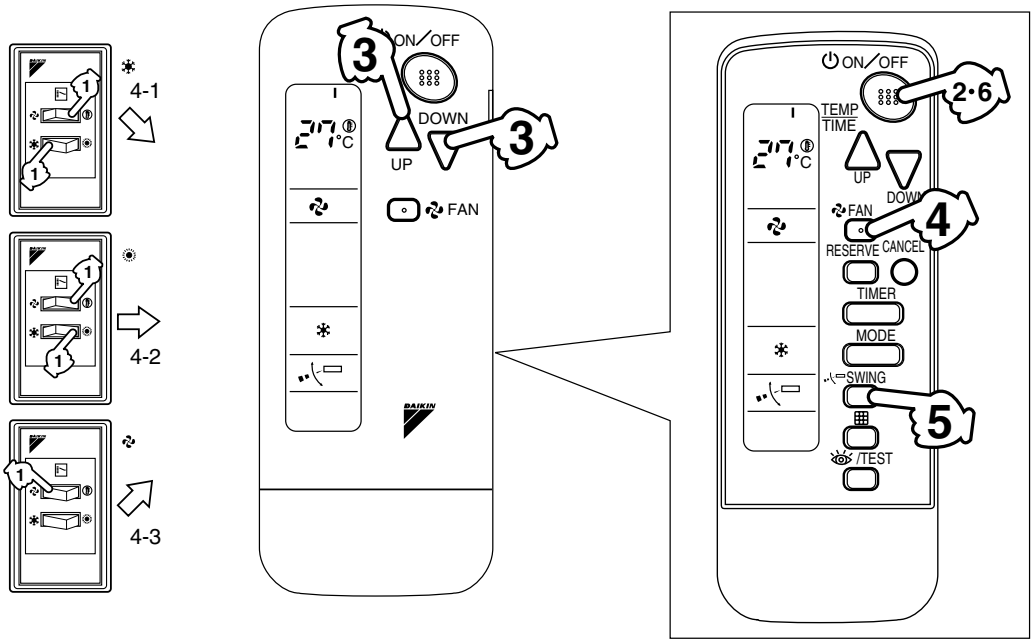

3P107422-21S

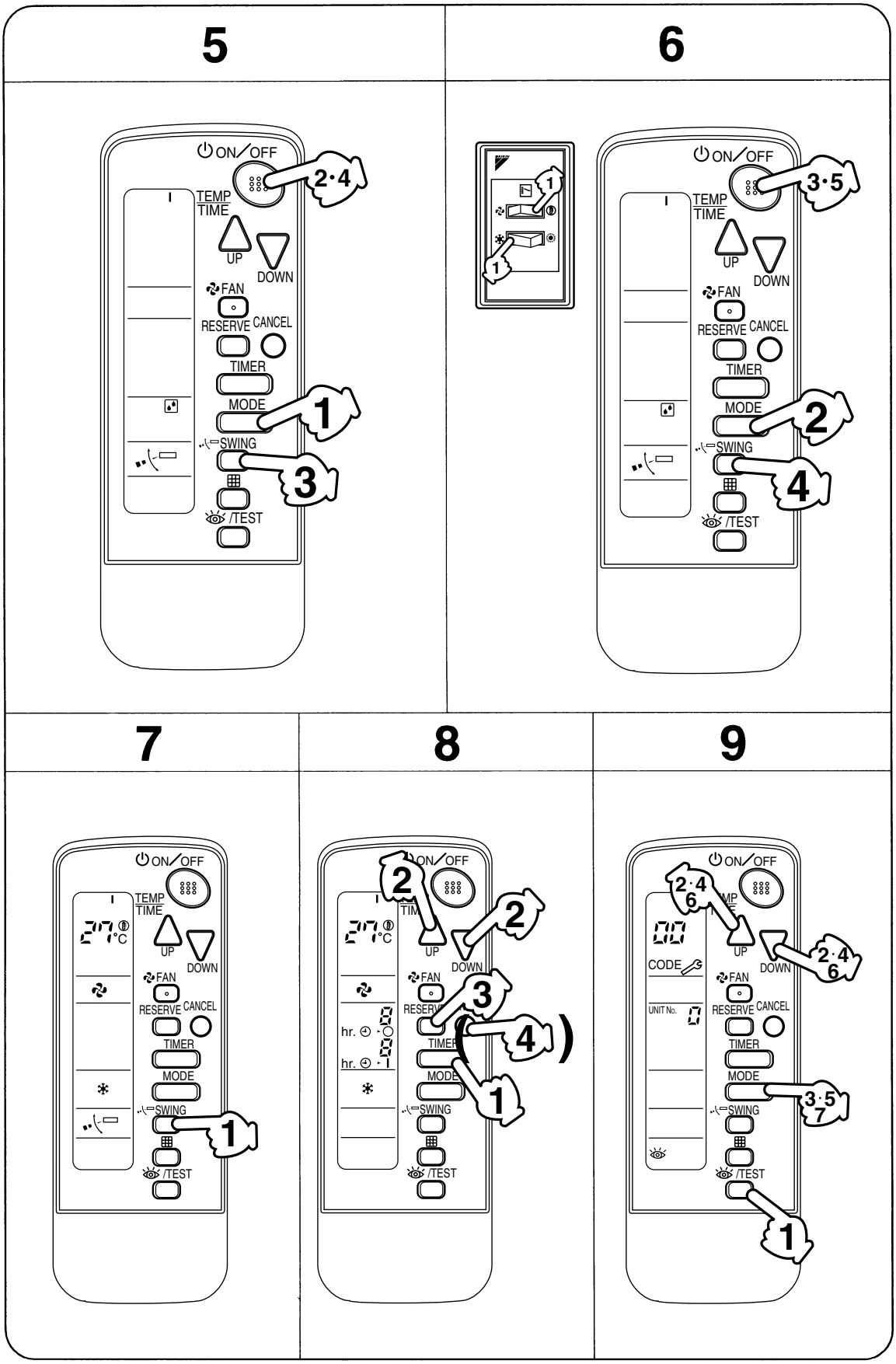

3P107422-21S

CONTENTS

PRIOR TO USE ..... [1]
ILLUSTRATION..... [2]

1 SAFETY PRECAUTIONS 1
2 NAMES AND FUNCTIONS OF THE OPERATING SECTION..... 4
3 HANDLING FOR WIRELESS REMOTE CONTROLLER 5
4 OPERATION PROCEDURE..... 6
5 NOT MALFUNCTION OF THE AIR CONDITIONER..... 12
6 HOW TO DIAGNOSE TROUBLE SPOTS..... 12

1. SAFETY PRECAUTIONS

To gain full advantage of the air conditioner's functions and to avoid malfunction due to mishandling, we recommend that you read this instruction manual carefully before use. This air conditioner is classified under "appliances not accessible to the general public".

The precautions described herein are classified as WARNING and CAUTION. They both contain important information regarding safety. Be sure to observe all precautions without fail.

⚠ **WARNING**..... Failure to follow these instructions properly may result in personal injury or loss of life.

⚠ **CAUTION**..... Failure to observe these instructions properly may result in property damage or personal injury, which may be serious depending on the circumstances.

After reading, keep this manual in a convenient place so that you can refer to it whenever necessary. If the equipment is transferred to a new user, be sure also to hand over the manual.

⚠ **WARNING**

Be aware that prolonged, direct exposure to cool or warm air from the air conditioner, or to air that is too cool or too warm can be harmful to your physical condition and health.

When the air conditioner is malfunctioning (giving off a burning odor, etc.) turn off power to the unit and contact your local dealer.
Continued operation under such circumstances may result in a failure, electric shocks or fire hazards.

Consult your local dealer to install your equipment.
Doing the work yourself may result in water leakage, electric shocks or fire hazards.

Consult your local dealer regarding modification, repair and maintenance of the air conditioner or the remote controller.
Improper workmanship may result in water leakage, electric shocks or fire hazards.

Do not place objects, including rods, your fingers, etc., in the air inlet or outlet.
Injury may result due to contact with the air conditioner's high-speed fan blades.

Beware of fire in case of refrigerant leakage.
If the air conditioner is not operating correctly, i.e. not generating cool or warm air, refrigerant leakage could be the cause. Consult your dealer for assistance.
The refrigerant within the air conditioner is safe and normally does not leak. However, in the event of a leakage, contact with a naked burner, heater or cooker may result in generation of noxious gas. Do not longer use the air conditioner until a qualified service person confirms that the leakage has been repaired.

3P107422-21S

Consult your local dealer regarding what to do in case of refrigerant leakage.
When the air conditioner is to be installed in a small room, it is necessary to take proper measures so that the amount of any leaked refrigerant does not exceed the concentration limit in the event of a leakage. Otherwise, this may lead to an accident due to oxygen depletion.

Contact professional personnel about attachment of accessories and be sure to use only accessories specified by the manufacturer.
If a defect results from your own workmanship, it may result in water leaks, electric shock or fire.

Consult your local dealer regarding relocation and reinstallation of the air conditioner.
Improper installation work may result in leakage, electric shocks or fire hazards.

Be sure to use fuses with the correct ampere reading.
Do not use improper fuses, copper or other wires as a substitute, as this may result in electric shock, fire, injury or damage to the unit.

Be sure to install an earth leakage breaker.
Failure to install an earth leakage breaker may result in electric shocks or fire.

Be sure to earth the unit.
Do not earth the unit to a utility pipe, lightning conductor or telephone earth lead. Imperfect earthing may result in electric shocks or fire.
A high surge current from lightning or other sources may cause damage to the air conditioner.

Consult the dealer if the air conditioner submerges owing to a natural disaster, such as a flood or typhoon.
Do not operate the air conditioner in that case, or otherwise a malfunction, electric shock, or fire may result.

Do not start or stop operating the air conditioner with the power supply breaker turned ON or OFF.
Otherwise, fire or water leakage may result. Furthermore, the fan will rotate abruptly if power failure compensation is enabled, which may result in injury.

Do not use the product in the atmosphere contaminated with oil vapor, such as cooking oil or machine oil vapor.
Oil vapor may cause crack damage, electric shocks, or fire.

Do not use the product in places with excessive oily smoke, such as cooking rooms, or in places with flammable gas, corrosive gas, or metal dust.
Using the product in such places may cause fire or product failures.

Do not use flammable materials (e.g., hairspray or insecticide) near the product.
Do not clean the product with organic solvents such as paint thinner.
The use of organic solvents may cause crack damage to the product, electric shocks, or fire.

Be sure to use a dedicated power supply for the air conditioner.
The use of any other power supply may cause heat generation, fire, or product failures.

⚠ CAUTION

Do not use the air conditioner for purposes other than those for which it is intended.
Do not use the air conditioner for cooling precision instruments, food, plants, animals or works of art as this may adversely affect the performance, quality and/or longevity of the object concerned.

Do not remove the outdoor unit's fan guard.
The guard protects against the unit's high speed fan, which may cause injury.

Do not place objects that are susceptible to moisture directly beneath the indoor or outdoor units.
Under certain conditions, condensation on the main unit or refrigerant pipes, air filter dirt or drain blockage may cause dripping, resulting in fouling or failure of the object concerned.

To avoid oxygen depletion, ensure that the room is adequately ventilated if equipment such as a burner is used together with the air conditioner.

After prolonged use, check the unit stand and its mounts for damage.
If left in a damaged condition, the unit may fall and cause injury.

Do not place flammable sprays or operate spray containers near the unit as this may result in fire.

Before cleaning, be sure to stop unit operation, turn the breaker off or remove the power cord.
Otherwise, an electric shock and injury may result.

To avoid electric shocks, do not operate with wet hands.

Do not place appliances that produce naked flames in places exposed to the air flow from the unit as this may impair combustion of the burner.

Do not place heaters directly below the unit, as resulting heat can cause deformation.

Do not allow a child to mount on the outdoor unit or avoid placing any object on it.
Falling or tumbling may result in injury.

Do not block air inlets nor outlets.
Impaired air flow may result in insufficient performance or trouble.

Be sure that children, plants or animals are not exposed directly to airflow from the unit, as adverse effects may ensue.

Do not wash the air conditioner or the remote controller with water, as this may result in electric shocks or fire.

Do not place water containers (flower vases, etc.) on the unit, as this may result in electric shocks or fire.

Do not install the air conditioner at any place where there is a danger of flammable gas leakage.
In the event of a gas leakage, build-up of gas near the air conditioner may result in fire hazards.

Do not put flammable containers, such as spray cans, within 1 m from the blow-off mouth.
The containers may explode because the warm air output of the indoor or outdoor unit will affect them.

The batteries must be removed from the appliance before it is scrapped and they are disposed of safely.

Arrange the drain to ensure complete drainage.
If proper drainage from the outdoor drain pipe does not occur during air conditioner operation, there could be a blockage due to dirt and debris build-up in the pipe. This may result in a water leakage from the indoor unit. Under these circumstances, stop air conditioner operation and consult your dealer for assistance.

The appliance is not intended for use by unattended young children or infirm persons.
Impairment of bodily functions and harm to health may result.

Children should be supervised to ensure that they do not play with the unit or its remote controller.
Accidental operation by a child may result in impairment of bodily functions and harm health.

Do not let children play on or around the outdoor unit.
If they touch the unit carelessly, injury may be caused.

Consult your dealer regarding cleaning the inside of the air conditioner.
Improper cleaning may cause breakage of plastic parts, water leakage and other damage as well as electric shocks.

To avoid injury, do not touch the air inlet or aluminum fins of the unit.

Do not place objects in direct proximity of the outdoor unit and do not let leaves and other debris accumulate around the unit.
Leaves are a hotbed for small animals which can enter the unit. Once in the unit, such animals can cause malfunctions, smoke or fire when making contact with electrical parts.

Never touch the internal parts of the controller.
Do not remove the front panel. Touching certain internal parts will cause electric shocks and damage to the unit. Please consult your dealer about checking and adjustment of internal parts.

Do not leave the remote controller wherever there is a risk of wetting.
If water gets into the remote controller there is a risk of electrical leakage and damage to electronic components.

When using the wireless remote controller, do not put a strong light beam or install an inverter fluorescent lamp near the receiving section on the main unit.
A malfunction may occur.

Watch your steps at the time of air filter cleaning or inspection.
High-place work is required, to which utmost attention must be paid.
If the scaffold is unstable, you may fall or topple down, thus causing injury.

2. NAMES AND FUNCTIONS OF THE OPERATING SECTION (Fig. 1, 2)

1	**DISPLAY " ▲ " (SIGNAL TRANSMISSION)**
	This lights up when a signal is being transmitted.
2	**DISPLAY " " " " " " " " " (OPERATION MODE)**
	This display shows the current OPERATION MODE. For straight cooling type, " " (Auto) and " " (Heating) are not installed.
3	**DISPLAY " " (SET TEMPERATURE)**
	This display shows the set temperature.
4	**DISPLAY " " (PROGRAMMED TIME)**
	This display shows PROGRAMMED TIME of the system start or stop.
5	**DISPLAY " " (AIR FLOW FLAP) (BRC4C61, 63 only)**
	Refer to page 9.
6	**DISPLAY " " " " (FAN SPEED)**
	The display shows the set fan speed.
7	**DISPLAY " TEST " (INSPECTION/ TEST OPERATION)**
	When the INSPECTION/TEST OPERATION BUTTON is pressed, the display shows the system mode is in.
8	**ON/OFF BUTTON**
	Press the button and the system will start. Press the button again and the system will stop.
9	**FAN SPEED CONTROL BUTTON**
	Press this button to select the fan speed, HIGH or LOW, of your choice.
10	**TEMPERATURE SETTING BUTTON**
	Use this button for SETTING TEMPERATURE (Operates with the front cover of the remote controller closed.)
11	**PROGRAMMING TIMER BUTTON**
	Use this button for programming "START and/or STOP" time. (Operates with the front cover of the remote controller opened.)
12	**TIMER MODE START/STOP BUTTON**
	Refer to page 9.
13	**TIMER RESERVE/CANCEL BUTTON**
	Refer to page 9.
14	**AIR FLOW DIRECTION ADJUST BUTTON (BRC4C61, 63 only)**
	Refer to page 9.
15	**OPERATION MODE SELECTOR BUTTON**
	Press this button to select OPERATION MODE.
16	**FILTER SIGN RESET BUTTON**
	Refer to the section of MAINTENANCE in the operation manual attached to the indoor unit.
17	**INSPECTION/TEST OPERATION BUTTON**
	This button is used only by qualified service persons for maintenance purposes.

18	**EMERGENCY OPERATION SWITCH**
	This switch is readily used if the remote controller does not work.
19	**RECEIVER**
	This receives the signals from the remote controller.
20	**OPERATING INDICATOR LAMP (Red)**
	This lamp stays lit while the air conditioner runs. It flashes when the unit is in trouble.
21	**TIMER INDICATOR LAMP (Green)**
	This lamp stays lit while the timer is set.
22	**AIR FILTER CLEANING TIME INDICATOR LAMP (Red)**
	Lights up when it is time to clean the air filter.
23	**DEFROST LAMP (Orange)**
	Lights up when the defrosting operation has started. (For straight cooling type this lamp does not turn on.)
24	**FAN/AIR CONDITIONING SELECTOR SWITCH**
	Set the switch to " " (FAN) for FAN and " " (A/C) for HEAT or COOL.
25	**COOL/HEAT CHANGEOVER SWITCH**
	Set the switch to " " (COOL) for COOL and " " (HEAT) for HEAT.

NOTES

- For the sake of explanation, all indications are shown on the display in Figure 1 contrary to actual running situations.
- Fig. 1-2 shows the remote controller with the front cover opened.
- Fig. 1-3 shows this remote controller can be used in conjunction with the one provided with the *VRV* system.
- If the air filter cleaning time indicator lamp lights up, clean the air filter as explained in the operation manual provided with the indoor unit.
  After cleaning and reinstalling the air filter, press the filter sign reset button on the remote controller. The air filter cleaning time indicator lamp on the receiver will go out.

3. HANDLING FOR WIRELESS REMOTE CONTROLLER

2

Precautions in handling remote controller

Direct the transmitting part of the remote controller to the receiving part of the air conditioner.

If something blocks the transmitting and receiving path of the indoor unit and the remote controller as curtains, it will not operate.

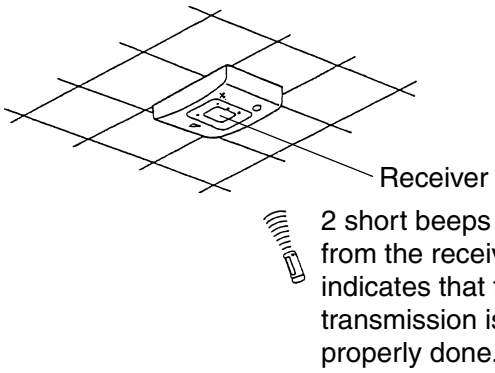

Transmitting distance is approximately 7 m.

Do not drop or get it wet.

It may be damaged.

Never press the button of the remote controller with a hard, pointed object.

The remote controller may be damaged.

Installation site

- It is possible that signals will not be received in rooms that have electronic fluorescent lighting. Please consult with the salesman before buying new fluorescent lights.
- If the remote controller operated some other electrical apparatus, move that machine away or consult your dealer.

Placing the remote controller in the remote controller holder
Install the remote controller holder to a wall or a pillar with the attached screw. (Make sure it transmits)

Placing the remote controller	Removing the remote controller
Slide from above	Pull it upward

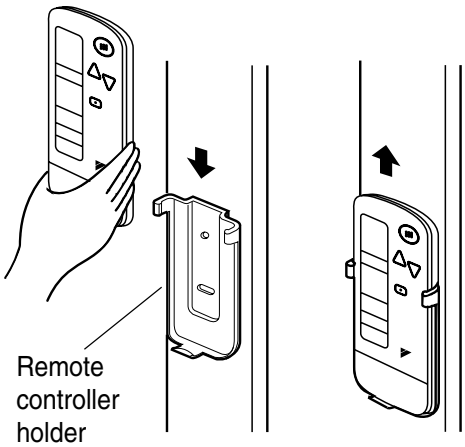

How to put the dry batteries

(1) Remove the back cover of the remote controller to the direction pointed by the arrow mark.

(2) Put the batteries
Use two dry cell batteries (AAA.LR03 (alkaline)). Put dry batteries correctly to fit their (+) and (–).

(3) Close the cover

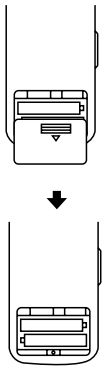

— When to change batteries
Under normal use, batteries last about a year. However, change them whenever the indoor unit doesn't respond or responds slowly to commands, or if the display becomes dark.

[CAUTIONS]

- Replace all batteries at the same time, do not use new and old batteries intermixed.
- In case the remote controller is not used for a long time remove all batteries in order to prevent liquid leak of the battery.

IN THE CASE OF CENTRALIZED CONTROL SYSTEM

- If the indoor unit is under centralized control, it is necessary to switch the remote controller's setting.
  In this case, contact your DAIKIN dealer.

4. OPERATION PROCEDURE

- Operating procedure varies with heat pump type and straight cooling type. Contact your Daikin dealer to confirm your system type.
- To protect the unit, turn on the main power switch 6 hours before operation.
- If the main power supply is turned off during operation, operation will restart automatically after the power turns back on again.

COOLING, HEATING, AUTOMATIC AND FAN OPERATION (Fig. 3, 4)

- AUTOMATIC OPERATION can be selected only by Heat recovery system.
- Cooling only system gives selection of FAN or COOLING OPERATION only.

《FOR SYSTEMS WITHOUT COOL/HEAT CHANGEOVER REMOTE CONTROL SWITCH (Fig. 3)》

1 Press OPERATION MODE SELECTOR button several times and select the OPERATION MODE of your choice as follows.

- COOLING OPERATION ..... " ❄ "
- HEATING OPERATION ..... " ☀ "
- AUTOMATIC OPERATION ..... "A"
- FAN OPERATION..... " ✣ "

On AUTOMATIC OPERATION

In this operation mode, COOL/HEAT changeover is automatically conducted at a present indoor temperature.

2 Press ON/OFF button.

OPERATION lamp lights up and the system starts OPERATION.

〈〈FOR SYSTEMS WITH COOL/ HEAT CHANGEOVER REMOTE CONTROL SWITCH (Fig. 4)〉〉

1 Select OPERATION MODE with the COOL/HEAT CHANGEOVER REMOTE CONTROL SWITCH as follows.

- COOLING OPERATION ..... Refer to fig. 4-1 (,)
- HEATING OPERATION ..... Refer to fig. 4-2 (,)
- FAN OPERATION ..... Refer to fig. 4-3 ( )

2 Press ON/OFF button.

OPERATION lamp lights up and the system starts OPERATION.

ADJUSTMENT

For programming TEMPERATURE and FAN SPEED and AIR FLOW DIRECTION, follow the procedure shown below.

3 Press TEMPERATURE SETTING button and program the setting temperature.

UP — Each time this button is pressed, setting temperature rises 1°C.

DOWN — Each time this button is pressed, setting temperature lowers 1°C.

In case of automatic operation

UP — Each time this button is pressed, setting temperature shifts to “H” side.

DOWN — Each time this button is pressed, setting temperature shifts to “L” side.

[°C]

	H	▪	M	▪	L
Setting temperature	25	23	22	21	19

NOTE

- The setting is impossible for fan operation.

4 Press FAN SPEED CONTROL button.

High or Low fan speed can be selected.

5 Press AIR FLOW DIRECTION button. (BRC4C61, 63 only)

Refer to “ADJUSTING THE AIR FLOW DIRECTION” (p. 9) for details.

STOPPING THE SYSTEM

6 Press ON/OFF button once again.

OPERATION lamp goes off, and the system stops OPERATION.

NOTE

- Do not turn OFF power immediately after the unit stops. Then, wait no less than 5 minutes. Water is leaking or there is something else wrong with the unit.

[EXPLANATION OF HEATING OPERATION]

DEFROST OPERATION

- As the frost on the coil of an outdoor unit increase, heating effect decreases and the system goes into DEFROST OPERATION.
- The fan operation stops and the DEFROST lamp of the indoor unit goes on. After 6 to 8 minutes (maximum 10 minutes) of DEFROST OPERATION, the system returns to HEATING OPERATION.

3P107422-21S

Heating capacity & Outdoor air temperature

- Heating capacity drops as outdoor air temperature lowers. If feeling cold, use another heater at the same time as this air conditioner.
- Hot air is circulated to warm the room. It will take some time from when the air conditioner is first started until the entire room becomes warm. The internal fan automatically turns at low speed until the air conditioner reaches a certain temperature on the inside. In this situation, all you can do is wait.
- If hot air accumulates on the ceiling and feet are left feeling cold, it is recommended to use a circulator. For details, contact the place of purchase.

PROGRAM DRY OPERATION (Fig. 5, 6)

- The function of this program is to decrease the humidity in your room with the minimum temperature decrease.
- Micro computer automatically determines TEMPERATURE and FAN SPEED.
- This system does not go into operation if the room temperature is below 16°C.

⟨⟨FOR SYSTEMS WITHOUT COOL/HEAT CHANGEOVER REMOTE CONTROL SWITCH (Fig. 5)⟩⟩

1 Press OPERATION MODE SELECTOR button several times and select "" (PROGRAM DRY OPERATION).

2 Press ON/OFF button.

OPERATION lamp lights up and system starts OPERATION.

ADJUSTMENT

3 Press AIR FLOW DIRECTION ADJUST button. (BRC4C61, 63 only)

Refer to "ADJUSTING THE AIR FLOW DIRECTION" (p. 9) for details.

STOPPING THE SYSTEM

4 Press ON/OFF button again.

OPERATION lamp goes off and the system stops OPERATION.

NOTE

- Do not turn OFF power immediately after the unit stops. Then, wait no less than 5 minutes. Water is leaking or there is something else wrong with the unit.

⟨⟨FOR SYSTEMS WITH COOL/HEAT CHANGEOVER REMOTE CONTROL SWITCH (Fig. 6)⟩⟩

1 Select COOLING OPERATION MODE with the COOL/HEAT CHANGEOVER REMOTE CONTROL SWITCH.

2 Press OPERATION MODE SELECTOR button several times and select PROGRAM DRY "".

3 Press ON/OFF button.

OPERATION lamp lights up and the system starts.

4 Press AIR FLOW DIRECTION ADJUST button. (BRC4C61, 63 only)

Refer to "ADJUSTING THE AIR FLOW DIRECTION" (p. 9) for details.

STOPPING THE SYSTEM

5 Press ON/OFF button once again.

OPERATION lamp goes off, and the system stops OPERATION.

NOTE

- Do not turn OFF power immediately after the unit stops. Then, wait no less than 5 minutes. Water is leaking or there is something else wrong with the unit.

ADJUSTING THE AIR FLOW DIRECTION (Fig. 7)

Press the AIR FLOW DIRECTION ADJUST button to adjust up/down air flow angle.

1 Press the AIR FLOW DIRECTION ADJUST button to select the air direction as shown below.

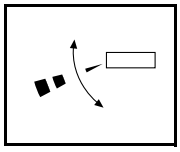

DISPLAY appears and the air flow direction continuously varies. (Automatic swing setting)

Press AIR FLOW DIRECTION ADJUST button to select the air direction of your choice.

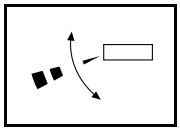

DISPLAY vanishes and the desired air flow direction is fixed. (Fixed air flow setting)

- The movable limit of the blade is changeable. Contact your Daikin dealer for details.

MOVEMENT OF THE AIR FLOW FLAP

For the following conditions, micro computer controls the air flow direction so it may be different from the display.

Operation mode	Cooling	Heating
Operation conditions	• When room temperature is lower than the set temperature	• When room temperature is higher than the set temperature • At defrost operation
	• When operating continuously at horizontal air flow direction	

Operation mode includes automatic operation.

PROGRAM TIMER OPERATION (Fig. 8)

- The timer is operated in the following two ways.

  Programming the stop time (⊙ ▸◯)
  ....The system stops operating after the set time has elapsed.

  Programming the start time (⊙ ▸ |)
  .... The system starts operating after the set time has elapsed.
- The timer can be programmed a maximum of 72 hours.
- The start and the stop time can be simultaneously programmed.

1 Press the TIMER MODE START/STOP button several times and select the mode on the display.

The display flashes.

For setting the timer stop.....“⊙ ▸◯”

For setting the timer start .....“⊙ ▸ | ”

2 Press the PROGRAMMING TIMER button and set the time for stopping or starting the system.

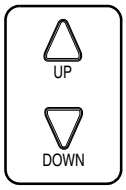

When this button is pressed, the time advances by 1 hour.

When this button is pressed, the time goes backward by 1 hour.

3 Press RESERVE button.

The timer setting procedure ends.
The display changes from flashing light to a constant light.

NOTE

- When setting the timer Off and On at the same time, repeat the above procedure from 1 to 3 once again.

For example.

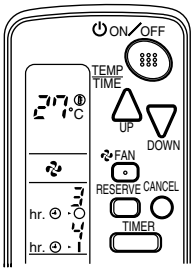

When the timer is programmed to stop the system after 3 hours and start the system after 4 hours, the system will stop after 3 hours and then 1 hour later the system will start.

- After the timer is programmed, the display shows the remaining time.
- Press the TIMER OFF button to cancel programming. The display vanishes. ( )

HOW TO SET MASTER REMOTE CONTROLLER (For *VRV* series)

- When the system is installed as shown below, it is necessary to designate the master remote controller.

⟨⟨For Heat pump system⟩⟩

When one outdoor unit is connected with several indoor units.

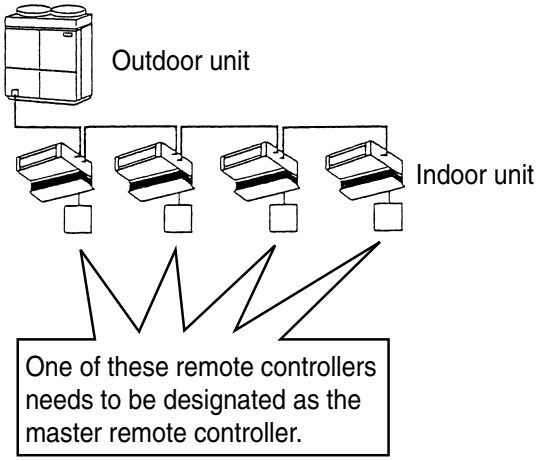

⟨⟨For Heat recovery system⟩⟩

When one BS unit is connected with several indoor units.

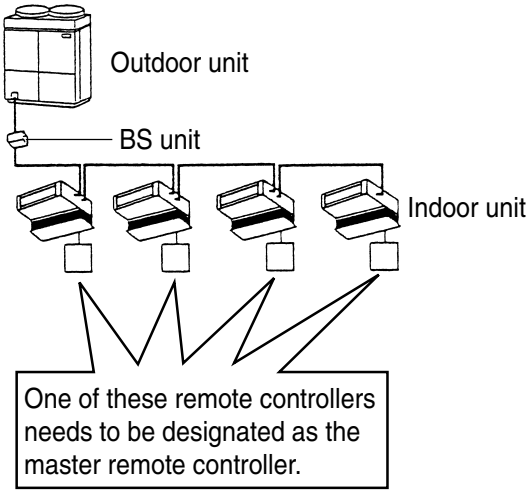

- Only the master remote controller can select HEATING, COOLING or AUTOMATIC (only Heat recovery system) OPERATION.

When the indoor unit with master remote controller is set to “COOL”, you can switch over operation mode between “FAN”, “DRY” and “COOL”.
When the indoor unit with master remote controller is set to “HEAT”, you can switch over operation mode between “FAN” and “HEAT”.
When the indoor unit with master remote controller is set to “FAN”, you cannot switch operation mode.
When attempting settings than that consented above, a “peep” is emitted as a warning.
Only with Heat recovery system, you can set the indoor unit to AUTOMATIC. Attempting to do so, a “peep” will be emitted as a warning.

How to designate the master remote controller

1 Continuously press the OPERATION MODE SELECTOR button for 4 seconds.

The displays showing "⊕" of all slave indoor unit connected to the same outdoor unit or BS unit flash.

2 Press the OPERATION MODE SELECTOR button to the indoor unit that you wish to designate as the master remote controller. Then designation is completed. This indoor unit is designated as the master remote controller and the display showing "⊕" vanishes.

- To change settings, repeat steps 1 and 2.

EMERGENCY OPERATION

When the remote controller does not work due to battery failure or the absence thereof, use this switch which is located beside the discharge grille on the main unit. When the remote controller does not work, but the battery low indicator on it is not lit, contact your dealer.

[START]

1 Press the EMERGENCY OPERATION switch.

The machine runs in the previous mode. The system operates with the previously set air flow direction, and air flow rate.

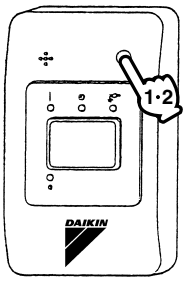

[STOP]

2 Press the EMERGENCY OPERATION switch again.

PRECAUTIONS FOR GROUP CONTROL SYSTEM OR TWO REMOTE CONTROLLER CONTROL SYSTEM

This system provides two other control systems beside individual control (one remote controller controls one indoor unit) system. Confirm the following if your unit is of the following control system type.

- **Group control system**
  One remote controller controls up to 16 indoor units.
  All indoor units are equally set.
- **Two remote controller control system**
  Two remote controllers control one indoor unit. (In case of group control system, one group of indoor units)
  The unit follows individual operation.

NOTES

- Cannot have two remote controller control system with only wireless remote controllers. (It will be a two remote controller control system having one wired and one wireless remote controllers.)
- Under two remote controller control system, wireless remote controller cannot control timer operation.
- Only the operating indicator lamp out of 3 other lamps on the indoor unit display functions.
- Contact your Daikin dealer in case of changing the combination or setting of group control and two remote controller control systems.

5. NOT MALFUNCTION OF THE AIR CONDITIONER

The following symptoms do not indicate air conditioner malfunction

I. THE SYSTEM DOES NOT OPERATE

- **The system does not restart immediately after the ON/OFF button is pressed.**
  If the OPERATION lamp lights, the system is in normal condition. It does not restart immediately because a safety device operates to prevent overload of the system. After 3 minutes, the system will turn on again automatically.
- **The system does not restart immediately when TEMPERATURE SETTING button is returned to the former position after pushing the button.**
  It does not restart immediately because a safety device operates to prevent overload of the system. After 3 minutes, the system will turn on again automatically.
- **If the reception beep is rapidly repeated 3 times (It sounds only twice when operating normally.)**
  Control is set to the optional controller for centralized control.
- **If the defrost lamp on the indoor unit's display is lit when heating is started.**
  This indication is to warn against cold air being blown from the unit. There is nothing wrong with the equipment.

6. HOW TO DIAGNOSE TROUBLE SPOTS (Fig. 9)

I. EMERGENCY STOP

When the air conditioner stops in emergency, the run lamp on the indoor unit starts blinking. Take the following steps yourself to read the malfunction code that appears on the display. Contact your dealer with this code. It will help pinpoint the cause of the trouble, speeding up the repair.

1 Press the INSPECTION/TEST button to select the inspection mode "0".

"0" appears on display and blinks. "UNIT" lights up.

2 Press PROGRAMMING TIMER BUTTON and change the unit number.

Press to change the unit number until the indoor unit beeps and perform the following operation according to the number of beeps.

Number of beeps

3 short beeps .....Perform all steps from 3 to 6

1 short beep .....Perform 3 and 6 steps

1 long beep .....Normal state

3 Press OPERATION MODE SELECTOR BUTTON.

"0" on the left-hand of the malfunction code blinks.

4 Press PROGRAMMING TIMER BUTTON and change the malfunction code.

Press until the indoor unit beeps twice.

5 Press OPERATION MODE SELECTOR BUTTON.

"0" on the right-hand of the malfunction code blinks.

6 Press PROGRAMMING TIMER BUTTON and change the malfunction code.

Press until the indoor unit makes a long beep.
The malfunction code is fixed when the indoor unit makes a long beep.

7 Reset of the display.

Press OPERATION MODE SELECTOR BUTTON to get the display back to the normal state.

II. IN CASE BESIDES EMERGENCY STOP

1. The unit does not operate at all.

- Check if the receiver is exposed of sunlight or strong light. Keep receiver away from light.
- Check if there are batteries in the remote controller. Place the batteries.
- Check if the indoor unit number and wireless remote controller number are equal.

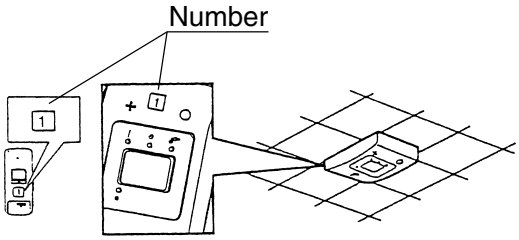

Operate the indoor unit with the remote controller of the same number.
Signal transmitted from a remote controller of a different number cannot be accepted. (If the number is not mentioned, it is considered as “1”)

2. The system operates but it does not sufficiently cool or heat.

- If the set temperature is not proper.
- If the FAN SPEED is set to LOW SPEED.
- If the air flow angle is not proper.

Contact the place of purchase in the following case.

⚠ WARNING

When you detect a burning odor, shut OFF power immediately and contact the place of purchase. Using the equipment in anything but proper working condition can result in equipment damage, electric shock and/or fire.

[Trouble]

The RUN lamp of the indoor unit is flashing and the unit does not work at all.

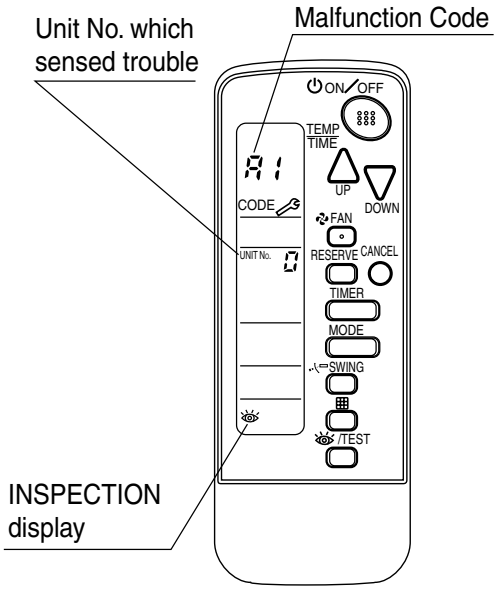

[Remedial action]

Check the malfunction code (A1 ~ UF) on the remote control and contact the place of purchase. (See page 12.)

Disposal requirements

Batteries supplied with the remote controller are marked with this symbol.
This means that the batteries shall not be mixed with unsorted household waste.
If a chemical symbol is printed beneath the symbol, this chemical symbol means that the battery contains a heavy metal above a certain concentration. Possible chemical symbols are:

■ Pb: lead (>0.004%)

Waste batteries must be treated at a specialized treatment facility for re-use.
By ensuring waste batteries are disposed of correctly, you will help to prevent potential negative consequences for the environment and human health.

1.4.4 Installation Manual

< Caution >

- Do not install more than 3 receivers in the vicinity of one another.
- With 4 or more units, there is always the possibility of malfunction.

1. Remove the upper part of receiver.
   - Insert the screwdriver here and gently work off the upper part of the receiver.

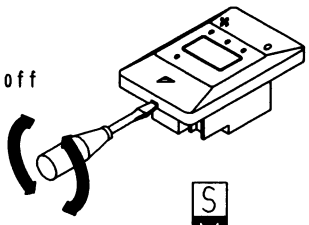

2. Initial setting

Change the MAIN/SUB changeover switch

(When using both a wired and a wireless remote controller for 1 indoor unit, the wired controller should be set to MAIN. And the wireless remote controller should be set to SUB.)

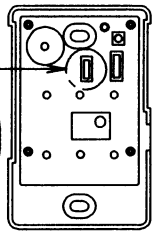

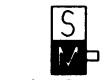

Main Remote Controller (Factory Set)

Sub Remote Controller

NOTES)
- If controlling with one remote controller, be sure to set it to "MAIN"
- Set the remote controller before turning power supply on.

3. Address setting
   - If setting multiple wireless remote controllers to operate in one room, perform address setting for the receiver and the wireless remote controller.

Setting the receiver (It is fuctory set to "1")

Referring to the table below, set the wireless address switch (SS2) on the PC board.

Unit No.	NO. 1	NO. 2	NO. 3
Wireless address switch (SS2)	SS2 1 2 3	SS2 1 2 3	SS2 1 2 3

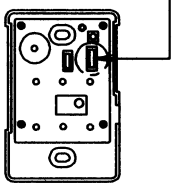

Setting the address of wireless remote controller (It is factory set to "1")

<Setting from the remote controller>

① Hold down the [▦] button and the [/TEST] button for at least 4 seconds to get the Field Set mode. (indicated in the display area in the figure at right).

② Press the [FAN] button and select a multiple setting(A/b). Each time the button is pressed the display switches between "A" and "b".

③ Press the "△UP" button and "▽DOWN" button to set the 1→2→3→4→5→6

Address can be set from 1 to 6, but set it to 1~3 and to same address as the receiver. (The receiver does not work with address 4~6.)

④ Press the [RESERVE] button to enter the setting.

⑤ Hold down the [/TEST] button for at least 1 second to quit the Field Set mode and return to the normal display.

2P018568

PRECAUTIONS

Set the Unit NO. of the receiver and the wireless remote controller to be equal.
If the settings differs, the signal from the remote controller cannot be transmitted.

(Multiple setting A/b)

When the indoor unit is being operating by outside control (central remote controller, etc.), it sometimes does not respond to ON/OFF and temperature setting commands from this remote controller. Check what setting the customer wants and make the multiple setting as shown below.

Remote controller		Indoor unit	
Multiple setting	Remote controller display	To control other air conditions and units	For other than on left
A : Standard	All items displayed.	Commands other than ON/OFF and temperature setting accepted. (1 LONG BEEP or 3 SHORT BEEPS emitted)	
b : Multi System	Operations remain displayed shortly after execution.	All commands accepted (2 SHORT BEEPS)	

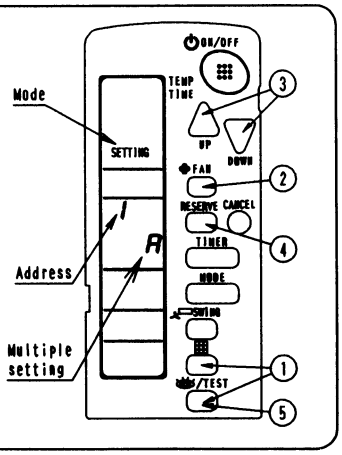

SAFETY CONSIDERATIONS

Please read this "SAFETY CONSIDERATIONS" carefully before installing air conditioning equipment and be sure to install it correctly.
After completing the installation, make sure at start up operation that the unit operates properly. Please instruct the customer how to operate the unit and keep maintenance.

For ceiling installation

1. Prepare the ceiling for the receiver.
   Open a hole in the ceiling for the receiver. (Use the provided ceiling installation pattern.)

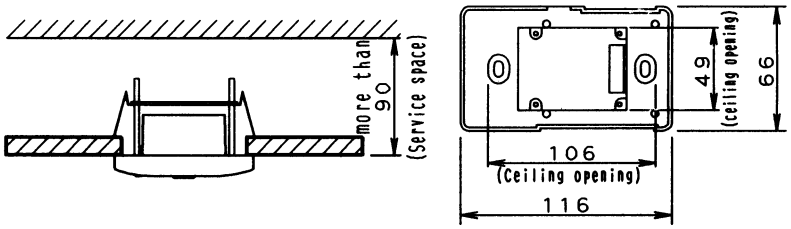

2P018568

2. Wire the indoor unit and fix the lower part.

- Install the winged bar to the lower part and fit the part with the attached screws. Then, wire (field supplied) accordingly.

(Connect the P1 and P2 terminals on the rear of the lower part to the P1 and P2 terminals on the indoor unit. The P1 and P2 terminals have no polarity.)

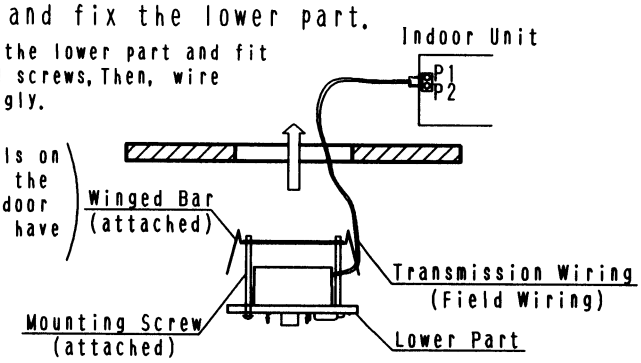

- Insert the lower part into the opening in the ceiling, first by pressing the wings inward to fit the hole and then by pushing from the screws until it sits flat on the ceiling.

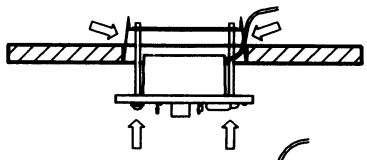

- Tighten the screws until the lower part is fixed in place.

(Tighten both screws evenly. Overtightening may deform the case and possibly make it harder to install the upper part.)

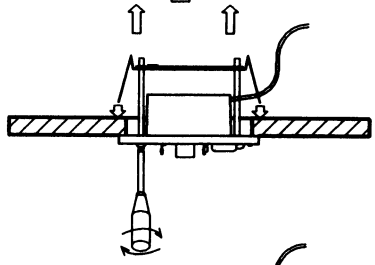

- Rettach the upper part of receiver.

(Install the upper part on the lower part being careful parts are facing in the correct direction. And, test the emergency run button.)

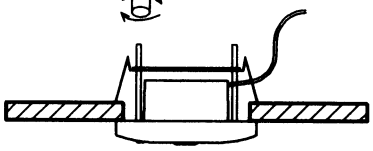

《Precautions on transmission wiring》

① When wiring, run the wiring away the power supply wiring in order to avoid receiving electric noise (external noise)

② When wiring, refer to the wiring diagram of indoor unit (attached to indoor unit) as well.

WIRING SPECIFICATION

Wiring type	Sheathed wire (2 wire)
Size	0.75～1.25mm²
Wiring length	max 200m (See Note 1)

NOTE)
1. Keep wires to less than 200m total when using 2 remote controller (wired or wireless) and when not.

2P018568

⚠ CAUTION

- Confirm that following conditions are satisfied prior to installation.
  - Ensure that nothing interrupts the operation of the wireless remote controller. (Ensure that there is neither a source of light nor fluorescent lamp near the receiver. Also, ensure that the receiver is not exposed of direct sun light.)
- Ensure that the operation display lamp and other indicators are easy to see.

For wall mounting

1. Wire the indoor unit

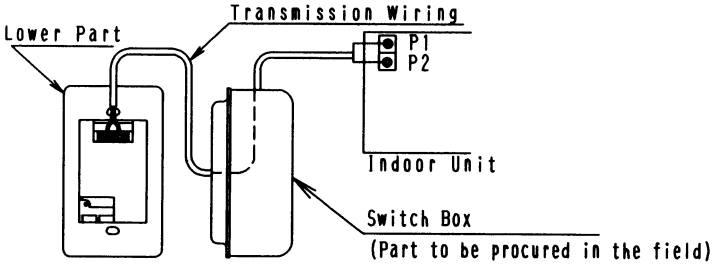

(Connect the P1 and P2 terminals on the rear of the lower part to the P1 and P2 terminals on the indoor unit.
Neither of the terminals is polarized, so it is not important if connections are crossed.)

2. Fix the lower part.

- Install the lower part on theh switch box(field supplied part)

(Select as flat a place ash possible to install the lower part. Also, be aware of the fact that overtightening the screws (attached) may deform the case and possibly make it harder to install the upper part.)

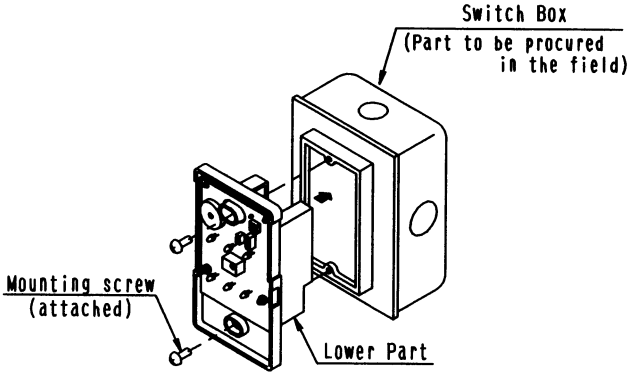

3. Rettach the upper part of remote controller.

(Install the upper part on the lower part being careful parts are facing in the correct direction.
And, test the emergency run button.)

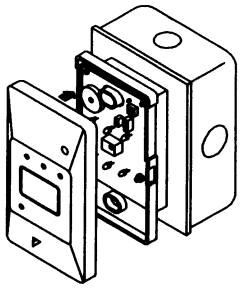

NOTES)
1. The switch box and wiring are not included.
2. Do not directly touch the PC board with your hand.

2P018568

1.5 BRC4C65 / BRC4C66 (for FXDQ and FXMQ-P)

1.5.1 Features

BRC4C65 (for *VRV* Heat Pump)
BRC4C66 (for *VRV* Cooling Only)

Signal receiver unit

- The same operation modes and settings as with wired remote controllers are possible.
- A compact and light signal receiver unit to be mounted into a wall or ceiling is included.
- This unit supports the three-speed airflow rate control (HH / H / L).

1.5.2 Function

Model	BRC4C65/66
ON/OFF	√
Temp. setting	√
Air flow rate setting	√
Air flow direction setting	√
Timer setting	√
Mode setting	√
Filter sign reset	√
Inspection/Test operation	√

(No support for swing mode)

1.5.3 Dimensions

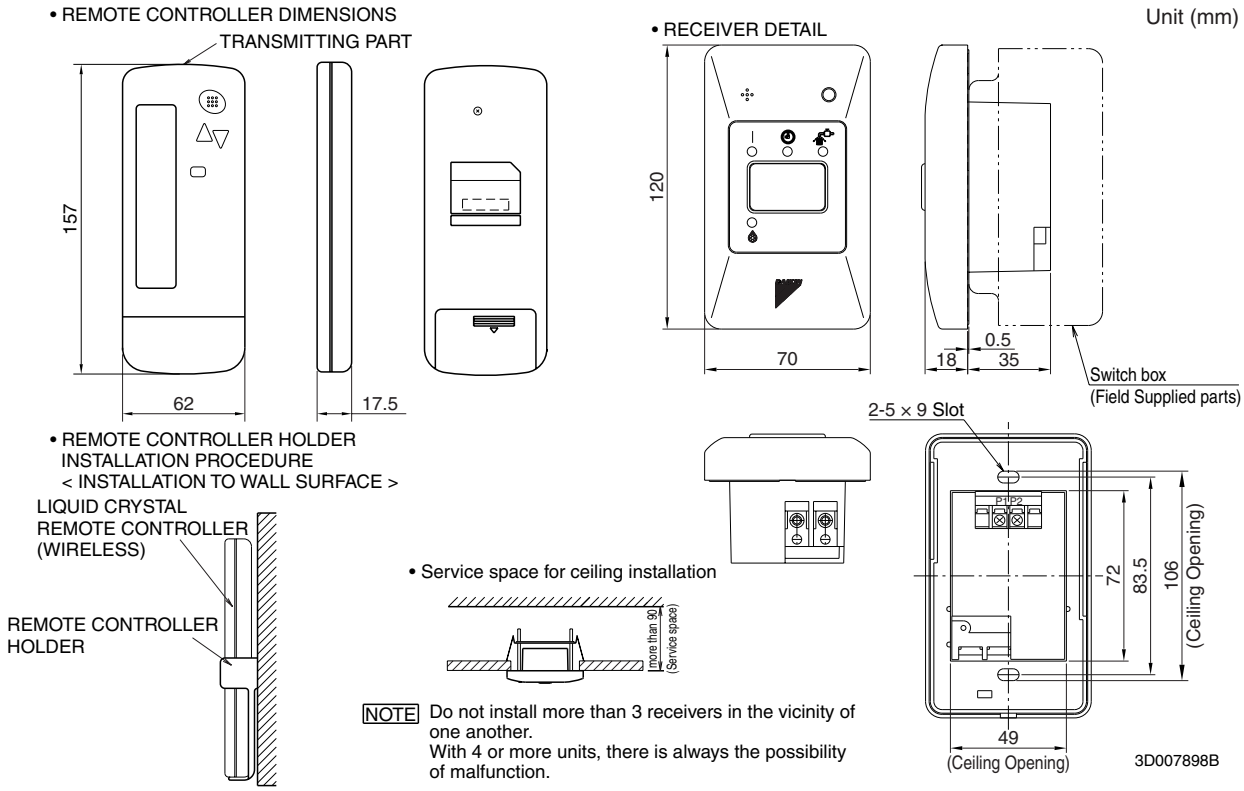

1.5.4 Operation Manual

■ Names and Functions of the Operating Section

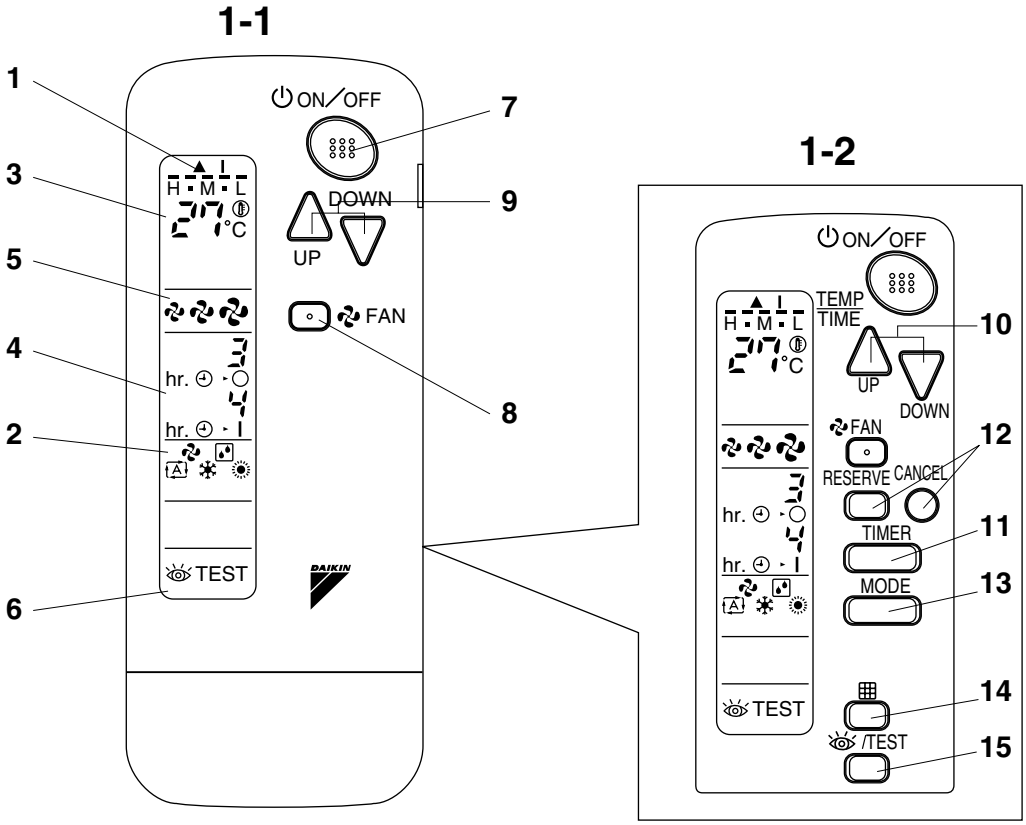

1

COOL/HEAT CHANGEOVER REMOTE CONTROL SWITCH

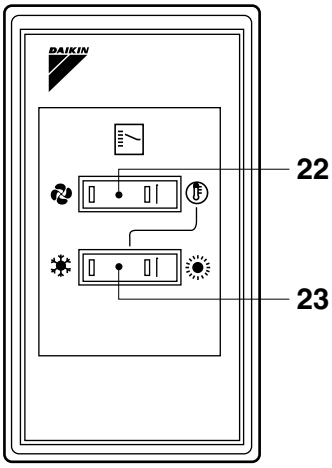

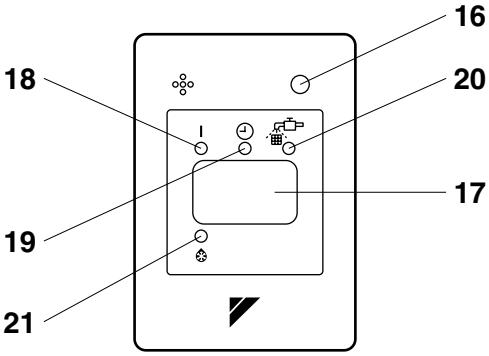

1-3 2

3P107422-29P

See Fig. 1, 2

1	**DISPLAY " ▲ " (SIGNAL TRANSMISSION)**
	This lights up when a signal is being transmitted.
2	**DISPLAY " " " " " " " " (OPERATION MODE)**
	This display shows the current OPERATION MODE. For straight cooling type, " " (Auto) and " " (Heating) are not installed.
3	**DISPLAY " " (SET TEMPERATURE)**
	This display shows the set temperature.
4	**DISPLAY " " (PROGRAMMED TIME)**
	This display shows PROGRAMMED TIME of the system start or stop.
5	**DISPLAY " " " " " " (FAN SPEED)**
	The display shows the set fan speed.
6	**DISPLAY " TEST " (INSPECTION/ TEST OPERATION)**
	When the INSPECTION/TEST OPERATION BUTTON is pressed, the display shows the system mode is in.
7	**ON/OFF BUTTON**
	Press the button and the system will start. Press the button again and the system will stop.
8	**FAN SPEED CONTROL BUTTON**
	Press this button to select the fan speed, HH or H or L, of your choice.
9	**TEMPERATURE SETTING BUTTON**
	Use this button for SETTING TEMPERATURE (Operates with the front cover of the remote controller closed.)
10	**PROGRAMMING TIMER BUTTON**
	Use this button for programming "START and/or STOP" time. (Operates with the front cover of the remote controller opened.)
11	**TIMER MODE START/STOP BUTTON**
	Refer to page 111.
12	**TIMER RESERVE/CANCEL BUTTON**
	Refer to page 111.
13	**OPERATION MODE SELECTOR BUTTON**
	Press this button to select OPERATION MODE.
14	**FILTER SIGN RESET BUTTON**
	Refer to the section of MAINTENANCE in the operation manual attached to the indoor unit.
15	**INSPECTION/TEST OPERATION BUTTON**
	This button is used only by qualified service persons for maintenance purposes.
16	**EMERGENCY OPERATION SWITCH**
	This switch is readily used if the remote controller does not work.
17	**RECEIVER**
	This receives the signals from the remote controller.
18	**OPERATING INDICATOR LAMP (Red)**
	This lamp stays lit while the air conditioner runs. It flashes when the unit is in trouble.

3P107422-29P

19	**TIMER INDICATOR LAMP (Green)**
	This lamp stays lit while the timer is set.
20	**AIR FILTER CLEANING TIME INDICATOR LAMP (Red)**
	Lights up when it is time to clean the air filter.
21	**DEFROST LAMP (Orange)**
	Lights up when the defrosting operation has started. (For straight cooling type this lamp does not turn on.)
22	**FAN/AIR CONDITIONING SELECTOR SWITCH**
	Set the switch to " " (FAN) for FAN and " " (A/C) for HEAT or COOL.
23	**COOL/HEAT CHANGEOVER SWITCH**
	Set the switch to " " (COOL) for COOL and " " (HEAT) for HEAT.

NOTE

- For the sake of explanation, all indications are shown on the display in Figure 1 contrary to actual running situations.
- Fig. 1-2 shows the remote controller with the front cover opened.
- Fig. 1-3 shows this remote controller can be used in conjunction with the one provided with the *VRV* system.
- If the air filter cleaning time indicator lamp lights up, clean the air filter as explained in the operation manual provided with the indoor unit.
  After cleaning and reinstalling the air filter, press the filter sign reset button on the remote controller. The air filter cleaning time indicator lamp on the receiver will go out.

3P107422-29P

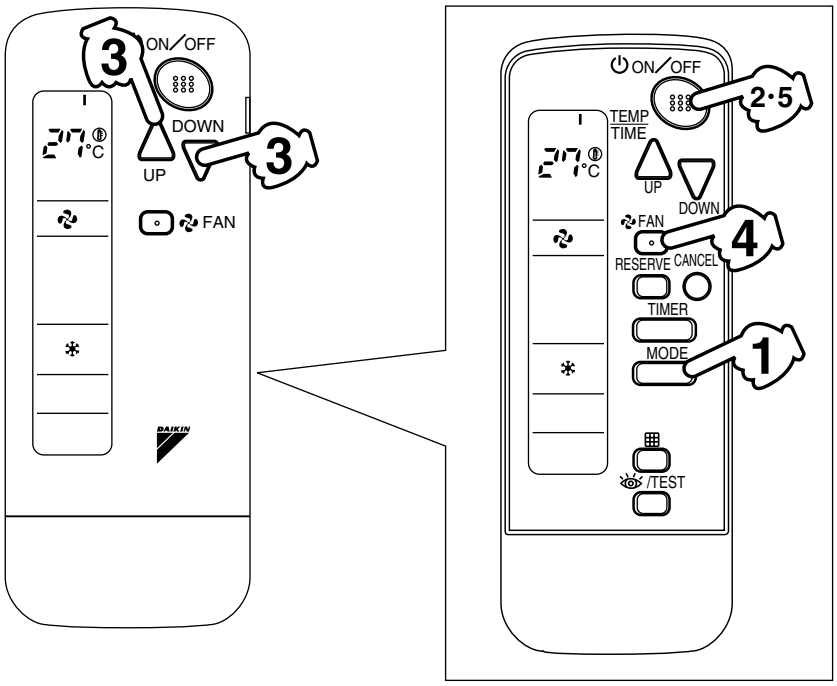

3

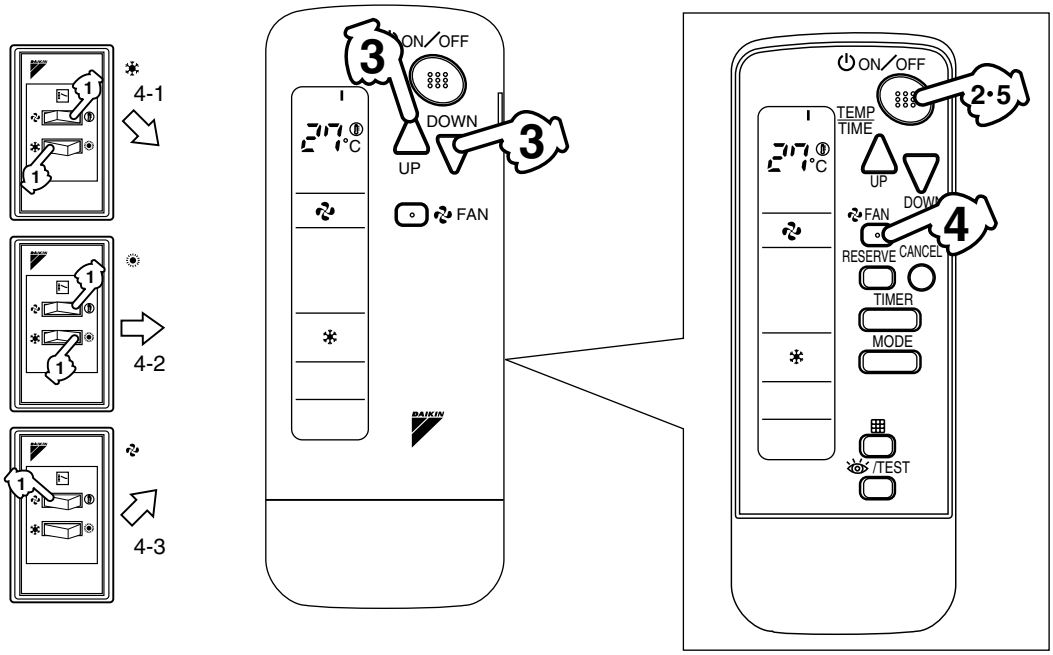

4

3P107422-29P

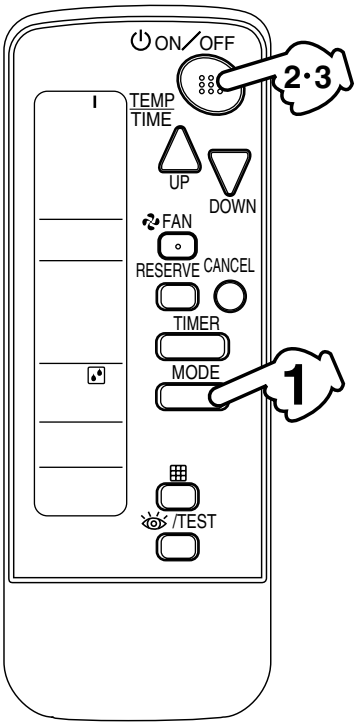

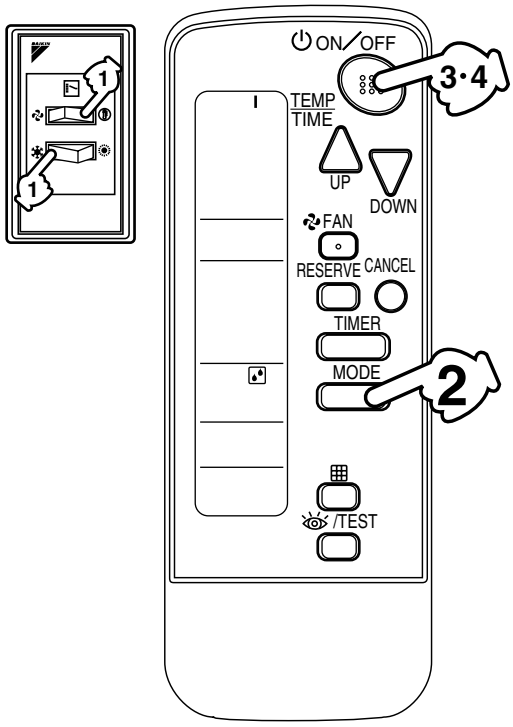

5

6

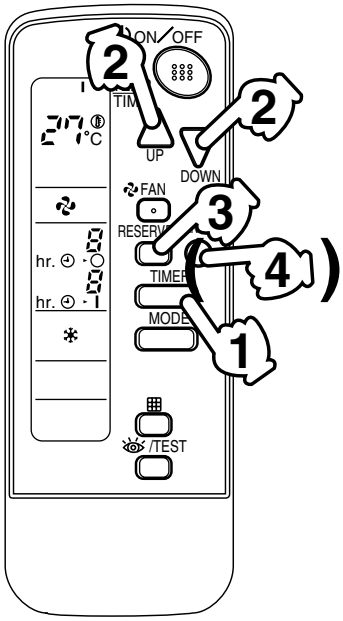

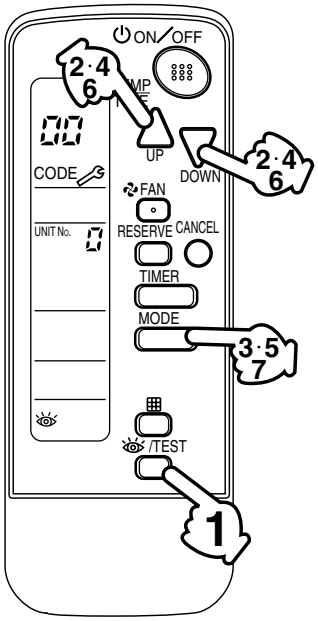

7

8

3P107422-29P

■ Handling for Wireless Remote Controller

Precautions in handling remote controller

Direct the transmitting part of the remote controller to the receiving part of the air conditioner.

If something blocks the transmitting and receiving path of the indoor unit and the remote controller as curtains, it will not operate.

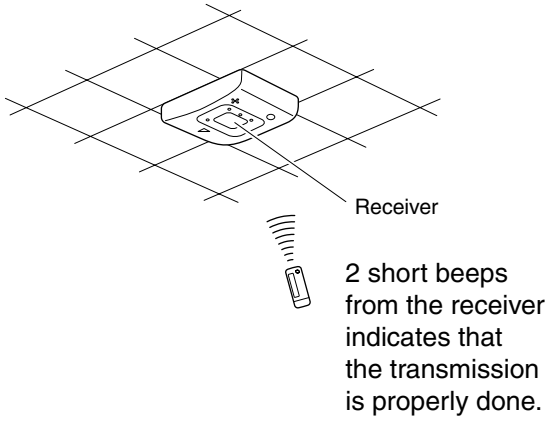

Transmitting distance is approximately 7m.

Do not drop or get it wet.

It may be damaged.

Never press the button of the remote controller with a hard, pointed object.

The remote controller may be damaged.

Installation site

- It is possible that signals will not be received in rooms that have electronic fluorescent lighting. Please consult with the salesman before buying new fluorescent lights.
- If the remote controller operated some other electrical apparatus, move that machine away or consult your dealer.

Placing the remote controller in the remote controller holder

Install the remote controller holder to a wall or a pillar with the attached screw. (Make sure it transmits.)

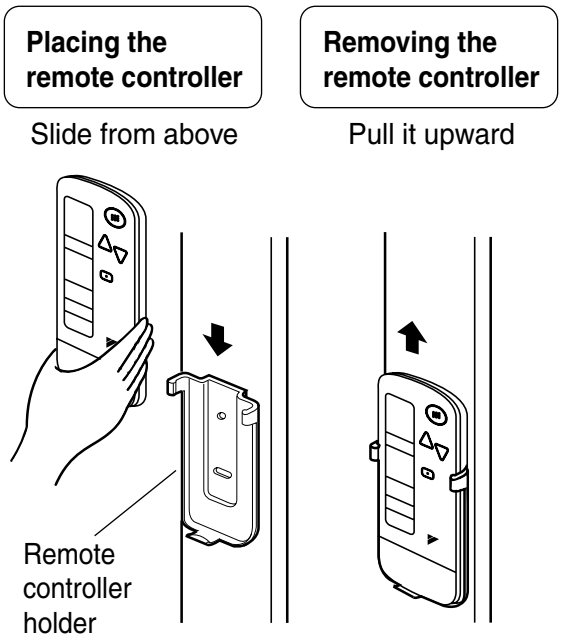

3P107422-29P

How to put the dry batteries

1. Remove the back cover of the remote controller to the direction pointed by the arrow mark.
2. Put the batteries
   Use two LR03 <IEC> dry cell batteries. Put dry batteries correctly to fit their (+) and (–).
3. Close the cover

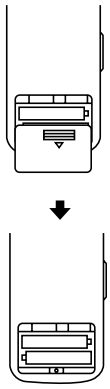

When to change batteries

Under normal use, batteries last about a year. However, change them whenever the indoor unit doesn't respond or responds slowly to commands, or if the display becomes dark.

[CAUTIONS]

- Replace all batteries at the same time, do not use new and old batteries intermixed.
- In case the remote controller is not used for a long time remove all batteries in order to prevent liquid leak of the battery.

IN THE CASE OF CENTRALIZED CONTROL SYSTEM

- If the indoor unit is under centralized control, it is necessary to switch the remote controller's setting. In this case, contact your DAIKIN dealer.

■ Operation Procedure

- Operating procedure varies with heat pump type and straight cooling only type. Contact your Daikin dealer to confirm your system types.
- To protect the unit, turn on the main power switch 6 hours before operation.
- If the main power supply is turned off during operation, operation will restart automatically after the power turns back on again.

COOLING, HEATING, AUTOMATIC AND FAN OPERATION (Fig. 3, 4)

- AUTOMATIC OPERATION can be selected only by Heat recovery system.
- Cooling only system gives selection of FAN or COOLING OPERATION only.

《FOR SYSTEMS WITHOUT COOL/HEAT CHANGEOVER REMOTE CONTROL SWITCH (Fig. 3)》

1 **Press OPERATION MODE SELECTOR button several times and select the OPERATION MODE of your choice as follows.**

- COOLING OPERATION ..... " ❄ "
- HEATING OPERATION..... " ☀ "
- AUTOMATIC OPERATION ..... " A "
- FAN OPERATION ..... " ✿ "

On AUTOMATIC OPERATION

In this operation mode, COOL/HEAT changeover is automatically conducted at a present indoor temperature.

2 **Press ON/OFF button.**

OPERATION lamp lights up and the system starts OPERATION.

《FOR SYSTEMS WITH COOL/HEAT CHANGEOVER REMOTE CONTROL SWITCH (Fig. 4)》

1 **Select OPERATION MODE with the COOL/HEAT CHANGEOVER REMOTE CONTROL SWITCH as follows.**

- COOING OPERATION..... Refer to fig. 4-1 (⏻ , ❄)
- HEATING OPERATION..... Refer to fig. 4-2 (⏻ , ☀)
- FAN OPERATION ..... Refer to fig. 4-3 (✿)

3P107422-29P

Press ON/OFF button.

OPERATION lamp lights up and the system starts OPERATION.

ADJUSTMENT

For programming TEMPERATURE and FAN SPEED and AIR FLOW DIRECTION, follow the procedure shown below.

Press TEMPERATURE SETTING button and program the setting temperature.

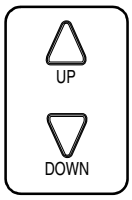

Each time this button is pressed, setting temperature rises 1°C.

Each time this button is pressed, setting temperature lowers 1°C.

In case of automatic operation

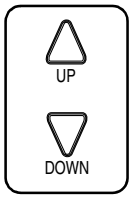

Each time this button is pressed, setting temperature shifts to “H” side.

Each time this button is pressed, setting temperature shifts to “L” side.

[°C]

	H	•	M	•	L
Setting temperature	25	23	22	21	19

NOTE

- The setting is impossible for fan operation.

Press FAN SPEED CONTROL button.

HH, H or L fan speed can be selected.

STOPPING THE SYSTEM

Press ON/OFF button once again.

OPERATION lamp goes off, and the system stops OPERATION.

NOTE

- Do not turn OFF power immediately after the unit stops. Then, wait no less than 5 minutes. Water is leaking or there is something else wrong with the unit.

[EXPLANATION OF HEATING OPERATION]

DEFROST OPERATION

- As the frost on the coil of an outdoor unit increases, heating effect decreases and the system goes into DEFROST OPERATION.
- The fan operation stops and the DEFROST lamp of the indoor unit goes on.
  After 6 to 8 minutes (maximum 10 minutes) of DEFROST OPERATION, the system returns to HEATING OPERATION.

3P107422-29P

Heating capacity & Outdoor air temperature

- Heating capacity drops as outdoor air temperature lowers. If feeling cold, use another heater at the same time as this air conditioner.
- Hot air is circulated to warm the room. It will take some time from when the air conditioner is first started until the entire room becomes warm. The internal fan automatically turns at low speed until the air conditioner reaches a certain temperature on the inside. In this situation, all you can do is wait.
- If hot air accumulates on the ceiling and feet are left feeling cold, it is recommended to use a circulator. For details, contact the place of purchase.

PROGRAM DRY OPERATION (Fig. 5, 6)

- The function of this program is to decrease the humidity in your room with the minimum temperature decrease.
- Micro computer automatically determines TEMPERATURE and FAN SPEED.
- This system does not go into operation if the room temperature is below 16°C.

《FOR SYSTEMS WITHOUT COOL/HEAT CHANGEOVER REMOTE CONTROL SWITCH (Fig. 5)》

1. **Press OPERATION MODE SELECTOR button several times and select "💧" (PROGRAM DRY OPERATION).**
2. **Press ON/OFF button.**

OPERATION lamp lights up and system starts OPERATION.

ADJUSTMENT

STOPPING THE SYSTEM

3. **Press ON/OFF button again.**

OPERATION lamp goes off and the system stops OPERATION.

NOTE

- Do not turn OFF power immediately after the unit stops. Then, wait no less than 5 minutes. Water is leaking or there is something else wrong with the unit.

《FOR SYSTEMS WITH COOL/HEAT CHANGEOVER REMOTE CONTROL SWITCH (Fig. 6)》

1. **Select COOLING OPERATION MODE with the COOL/HEAT CHANGEOVER REMOTE CONTROL SWITCH.**
2. **Press OPERATION MODE SELECTOR button several times and select PROGRAM DRY "💧".**
3. **Press ON/OFF button.**

OPERATION lamp lights up and the system starts.

STOPPING THE SYSTEM

4. **Press ON/OFF button once again.**

OPERATION lamp goes off, and the system stops OPERATION.

NOTE

- Do not turn OFF power immediately after the unit stops. Then, wait no less than 5 minutes. Water is leaking or there is something else wrong with the unit.

MOVEMENT OF THE AIR FLOW FLAP

For the following conditions, micro computer controls the air flow direction so it may be different from the display.

Operation mode	Cooling	Heating
Operation conditions	■ When room temperature is lower than the set temperature	■ When room temperature is higher than the set temperature ■ At defrost operation
	■ When operating continuously at horizontal air flow direction	

Operation mode includes automatic operation.

3P107422-29P

PROGRAM TIMER OPERATION (Fig. 7)

- The timer is operated in the following two ways.
  Programming the stop time (◷ ▸ ◯)
  ....The system stops operating after the set time has elapsed.
  Programming the start time (◷ ▸ |)
  .... The system starts operating after the set time has elapsed.
- The timer can be programmed a maximum of 72 hours.
- The start and the stop time can be simultaneously programmed.

1 Press the TIMER MODE START/STOP button several times and select the mode on the display.

The display flashes.
For setting the timer stop ..... " ◷ ▸ ◯ "
For setting the timer start ..... " ◷ ▸ | "

2 Press the PROGRAMMING TIMER button and set the time for stopping or starting the system.

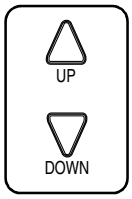

When this button is pressed, the time advances by 1 hour.

When this button is pressed, the time goes backward by 1 hour.

3 Press RESERVE button.

The timer setting procedure ends.
The display changes from flashing light to a constant light.

NOTE

- When setting the timer Off and On at the same time, repeat the above procedure from 1 to 3 once again.

For example

When the timer is programmed to stop the system after 3 hours and start the system after 4 hours, the system will stop after 3 hours and then 1 hour later the system will start.

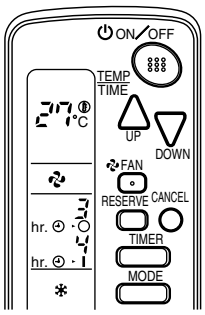

- After the timer is programmed, the display shows the remaining time.
- Press the TIMER OFF button to cancel programming. The display vanishes. (4)

HOW TO SET MASTER REMOTE CONTROLLER (For *VRV* system)

- When the system is installed as shown below, it is necessary to designate the master remote controller.

3P107422-29P

《**For Heat pump system**》
When one outdoor unit is connected with several indoor units.

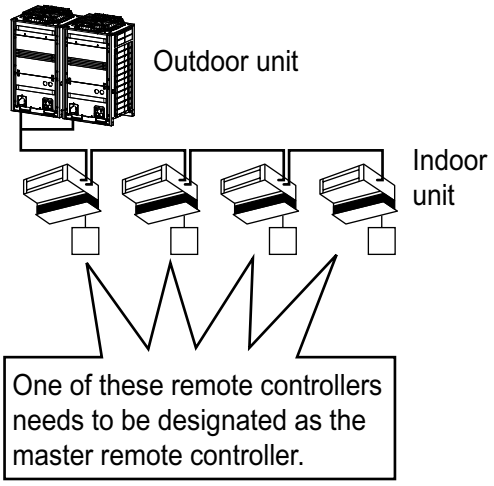

《**For Heat recovery system**》
When one BS unit is connected with several indoor units.

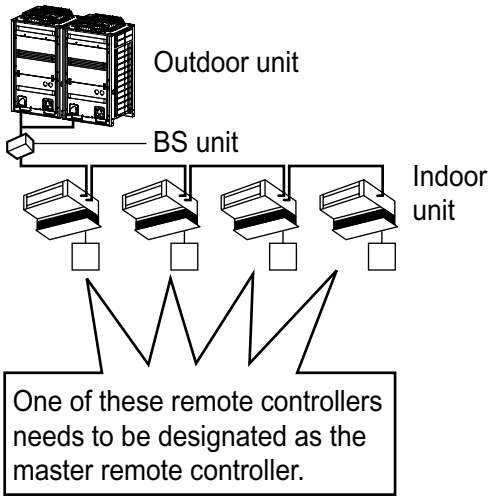

■ Only the master remote controller can select HEATING, COOLING or AUTOMATIC (only Heat recovery system) OPERATION.

When the indoor unit with master remote controller is set to “COOL”, you can switch over operation mode between “FAN”, “DRY” and “COOL”.
When the indoor unit with master remote controller is set to “HEAT”, you can switch over operation mode between “FAN” and “HEAT”.
When the indoor unit with master remote controller is set to “FAN”, you cannot switch operation mode.
When attempting settings than that consented above, a “peep” is emitted as a warning.
Only with Heat recovery system, you can set the indoor unit to AUTOMATIC. Attempting to do so, a “peep” will be emitted as a warning.

How to designate the master remote controller

1 **Continuously press the OPERATION MODE SELECTOR button for 4 seconds.**

The displays showing “⊖” of all slave indoor unit connected to the same outdoor unit or BS unit flash.

2 **Press the OPERATION MODE SELECTOR button to the indoor unit that you wish to designate as the master remote controller. Then designation is completed. This indoor unit is designated as the master remote controller and the display showing “⊖” vanishes.**

■ To change settings, repeat steps 1 and 2.

3P107422-29P

EMERGENCY OPERATION

When the remote controller does not work due to battery failure or the absence thereof, use this switch which is located beside the discharge grille on the main unit. When the remote controller does not work, but the battery low indicator on it is not lit, contact your dealer.

[START]

Press the EMERGENCY OPERATION switch.

The machine runs in the previous mode.
The system operates with the previously set air flow direction, and airflow rate.

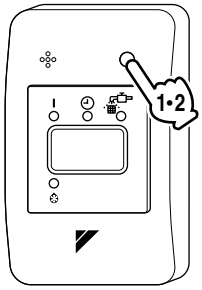

[STOP]

Press the EMERGENCY OPERATION switch again.

PRECAUTIONS FOR GROUP CONTROL SYSTEM OR TWO REMOTE CONTROLLER CONTROL SYSTEM

This system provides two other control systems beside individual control (one remote controller controls one indoor unit) system. Confirm the following if your unit is of the following control system type.

- **Group control system**
  One remote controller controls up to 16 indoor units.
  All indoor units are equally set.
- **Two remote controller control system**
  Two remote controllers control one indoor unit. (In case of group control system, one group of indoor units.)
  The unit follows individual operation.

NOTE

- Cannot have two remote controllers control system with only wireless remote controllers. (It will be a two remote controller control system having one wired and one wireless remote controllers.)
- Under two remote controller control system, wireless remote controller cannot control timer operation.
- Only the operating indicator lamp out of 3 other lamps on the indoor unit display functions.
- Contact your Daikin dealer in case of changing the combination or setting of group control and two remote controller control systems.

3P107422-29P

■ Not Malfunction of the Air Conditioner

The following symptoms do not indicate air conditioner malfunction

I. THE SYSTEM DOES NOT OPERATE

- **The system does not restart immediately after the ON/OFF button is pressed.**
  If the OPERATION lamp lights, the system is in normal condition. It does not restart immediately because a safety device operates to prevent overload of the system. After 3 minutes, the system will turn on again automatically.
- **The system does not restart immediately when TEMPERATURE SETTING button is returned to the former position after pushing the button.**
  It does not restart immediately because a safety device operates to prevent overload of the system. After 3 minutes, the system will turn on again automatically.
- **If the reception beep is rapidly repeated 3 times (It sounds only twice when operating normally.)**
  Control is set to the optional controller for centralized control.
- **If the defrost lamp on the indoor unit's display is lit when heating is started.**
  This indication is to warn against cold air being blown from the unit. There is nothing wrong with the equipment.

■ How to Diagnose Trouble Spots

See Fig. 8

I. EMERGENCY STOP

When the air conditioner stops in emergency, the run lamp on the indoor unit starts blinking. Take the following steps yourself to read the malfunction code that appears on the display. Contact your dealer with this code. It will help pinpoint the cause of the trouble, speeding up the repair.

1 **Press the INSPECTION/TEST button to select the inspection mode " 0 ".**

" 0 " appears on display and blinks. "UNIT" lights up.

2 **Press PROGRAMMING TIMER BUTTON and change the unit number.**

Press to change the unit number until the indoor unit beeps and perform the following operation according to the number of beeps.

Number of beeps

3 short beeps ..... Perform all steps from 3 to 6
1 short beep ..... Perform 3 and 6 steps
1 long beep ..... Normal state

3 **Press OPERATION MODE SELECTOR BUTTON.**

" 0 " on the left-hand of the malfunction code blinks.

4 **Press PROGRAMMING TIMER BUTTON and change the malfunction code.**

Press until the indoor unit beeps twice.

5 **Press OPERATION MODE SELECTOR BUTTON.**

" 0 " on the right-hand of the malfunction code blinks.

6 **Press PROGRAMMING TIMER BUTTON and change the malfunction code.**

Press until the indoor unit makes a long beep.
The malfunction code is fixed when the indoor unit makes a long beep.

7 **Reset of the display.**

Press OPERATION MODE SELECTOR BUTTON to get the display back to the normal state.

3P107422-29P

II. IN CASE BESIDES EMERGENCY STOP

1. The unit does not operate at all.

- Check if the receiver is exposed of sunlight or strong light. Keep receiver away from light.
- Check if there are batteries in the remote controller. Place the batteries.
- Check if the indoor unit number and wireless remote controller number are equal.

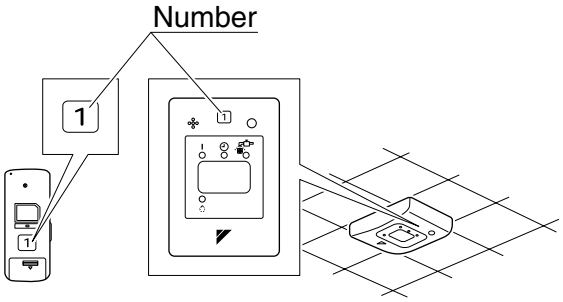

Operate the indoor unit with the remote controller of the same number.
Signal transmitted from a remote controller of a different number cannot be accepted. (If the number is not mentioned, it is considered as “1”.)

2. The system operates but it does not sufficiently cool or heat.

- If the set temperature is not proper.
- If the FAN SPEED is set to L SPEED.
- If the air flow angle is not proper.

Contact the place of purchase in the following case.

⚠ **WARNING**

When you detect a burning odor, shut OFF power immediately and contact the place of purchase. Using the equipment in anything but proper working condition can result in equipment damage, electric shock and/or fire.

[Trouble]

The RUN lamp of the indoor unit is flashing and the unit does not work at all.

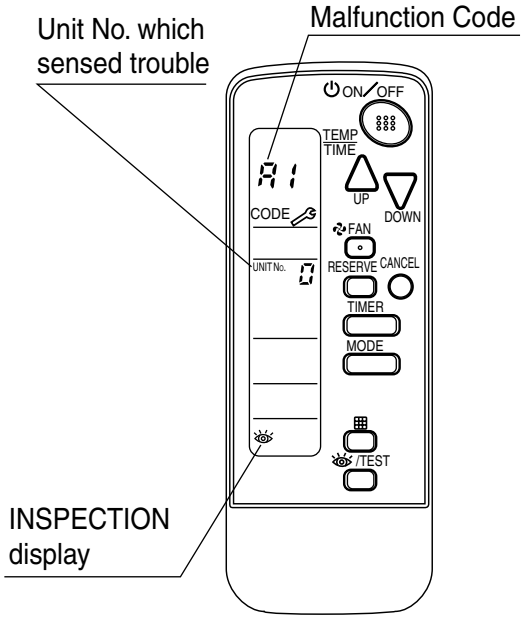

[Remedial action]

Check the malfunction code (A1 ~ UF) on the remote control and contact the place of purchase. (See page 114.)

3P107422-29P

1.5.5 Installation Manual

Caution

- Do not install more than 3 receivers in the vicinity of one another.
- With 4 or more units, there is always the possibility of malfunction.

■ Remove the Upper Part of Receiver

- Insert the screwdriver here and gently work off the upper part of the receiver.

■ Initial Setting

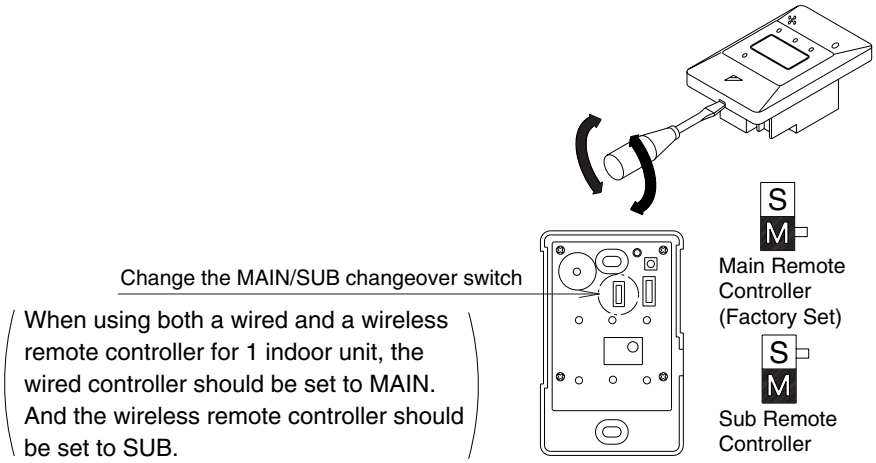

NOTES

- If controlling with one remote controller, be sure to set it to "MAIN"
- Set the remote controller before turning power supply on.

■ Address Setting

- If setting multiple wireless remote controllers to operate in one room, perform address setting for the receiver and the wireless remote controller.

Setting the receiver (It is factory set to "1")

Referring to the table below, set the wireless address switch (SS2) on the PC board.

Unit No.	NO.1	NO.2	NO.3
Wireless address switch (SS2)	SS2 1 2 3	SS2 1 2 3	SS2 1 2 3

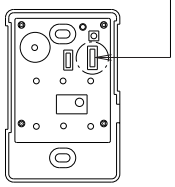

Setting the address of wireless remote controller (It is factory set to "1")

<Setting from the remote controller>

① Hold down the [▦] button and the [/TEST] button for at least 4 seconds to get the Field Set mode. (indicated in the display area in the figure at right).

② Press the [FAN] button and select a multiple setting (A/b). Each time the button is pressed the display switches between "A" and "b".

③ Press the " △ UP " button and " ▽ DOWN " button to set the →1→2→3→4→5→6 Address can be set from 1 to 6, but set it to 1~3 and to same address as the receiver. (The receiver does not work with address 4~6.)

④ Press the [RESERVE] button to enter the setting.

⑤ Hold down the [/TEST] button for at least 1 second to quit the Field Set mode and return to the normal display.

PRECAUTIONS

Set the Unit NO. of the receiver and the wireless remote controller to be equal.
If the settings differs, the signal from the remote controller cannot be transmitted.

2P018568

SAFETY CONSIDERATIONS

Please read this "SAFETY CONSIDERATIONS" carefully before installing air conditioning equipment and be sure to install it correctly.

After completing the installation, make sure at start up operation that the unit operates properly. Please instruct the customer how to operate the unit and keep maintenance.

CAUTION

- Confirm that following conditions are satisfied prior to installation.
  - Ensure that nothing interrupts the operation of the wireless remote controller. (Ensure that there is neither a source of light nor fluorescent lamp near the receiver. Also, ensure that the receiver is not exposed of direct sun light.)
- Ensure that the operation display lamp and other indicators are easy to see.

⟨Multiple setting A/b⟩

When the indoor unit is being operating by outside control (central remote controller, etc.), it sometimes does not respond to ON/OFF and temperature setting commands from this remote controller. Check what setting the customer wants and make the multiple setting as shown below.

Remote controller		Indoor unit	
Multiple setting	Remote controller display	To control other air conditions and units	For other than on left
A: Standard	All items displayed.	Commands other than ON/OFF and temperature setting accepted. (1 LONG BEEP or 3 SHORT BEEPS emitted)	
b: Multi System	Operations remain displayed shortly after execution.	All commands accepted (2 SHORT BEEPS)	

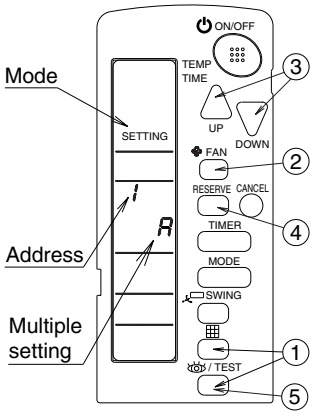

■ For Ceiling Installation

(1) Prepare the Ceiling for the Receiver

Open a hole in the ceiling for the receiver. (Use the provided ceiling installation pattern.)

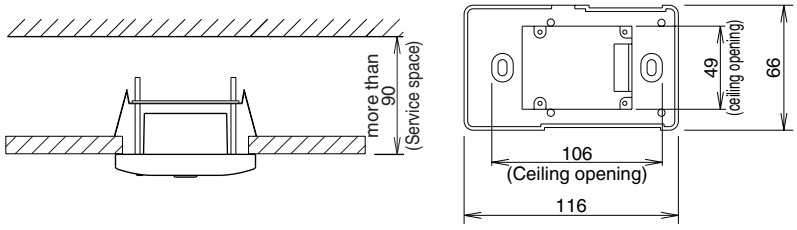

(2) Wire the Indoor Unit and Fix the Lower Part

- Install the winged bar to the lower part and fit the part with the attached screws, Then, wire (field supplied) accordingly.

Connect the P1 and P2 terminals on the rear of the lower part to the P1 and P2 terminals on the indoor unit. The P1 and P2 terminals have no polarity.

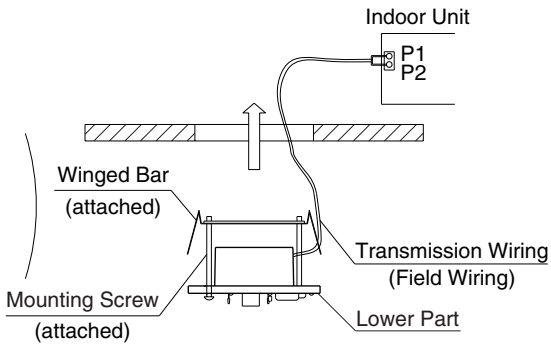

2P018568

- Insert the lower part into the opening in the ceiling, first by pressing the wings inward to fit the hole and then by pushing from the screws until it sits flat on the ceiling.

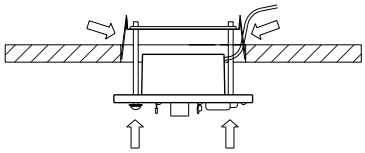

- Tighten the screws until the lower part is fixed in place.

(Tighten both screws evenly. Overtightening may deform the case and possibly make it harder to install the upper part.)

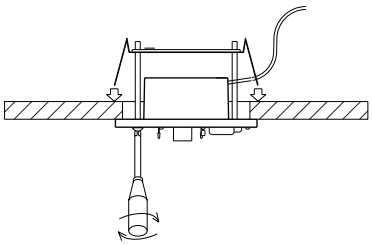

- Reattach the upper part of receiver.

(Install the upper part on the lower part being careful parts are facing in the correct direction. And, test the emergency run button.)

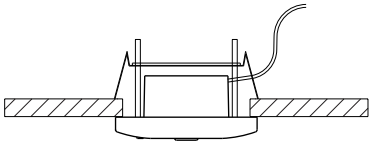

■ For Wall Mounting

(1) Wire the Indoor Unit

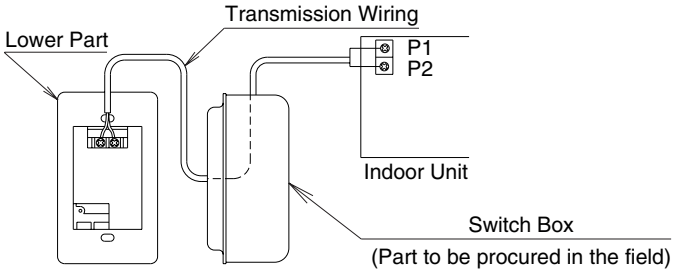

(Connect the P1 and P2 terminals on the rear of the lower part to the P1 and P2 terminals on the indoor unit.
Neither of the terminals is polarized, so it is not important if connections are crossed.)

2P018568

(2) Fix the Lower Part

- Install the lower part on the switch box (field supplied part)

(Select as flat a place ash possible to install the lower part. Also, be aware of the fact that overtightening the screws (attached) may deform the case and possibly make it harder to install the upper part.)

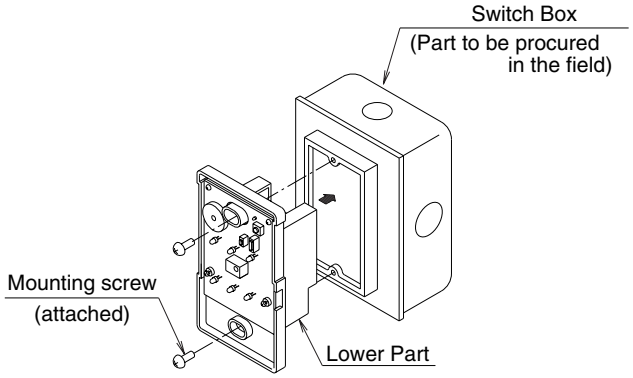

(3) Reattach the Upper Part of Remote Controller

(Install the upper part on the lower part being careful parts are facing in the correct direction.
And, test the emergency run button.)

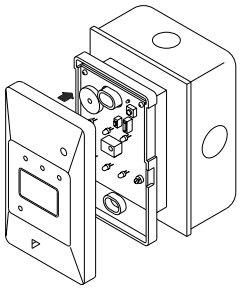

NOTES)
1. The switch box and wiring are not included.
2. Do not directly touch the PC board with your hand.

⟨⟨Precautions on transmission wiring⟩⟩

① When wiring, run the wiring away the power supply wiring in order to avoid receiving electric noise (external noise).
② When wiring, refer to the wiring diagram of indoor unit (attached to indoor unit) as well.

WIRING SPECIFICATION

Wiring type	Sheathed wire (2 wire)
Size	0.75~1.25mm^2
Wiring length	max 200m (See Note 1)

NOTE)
1. Keep wires to less than 200m total when using 2 remote controller (wired or wireless) and when not.

2P018568

1.6 BRC7EA63W / BRC7EA66 (for FXH(Q))

1.6.1 Features

1.6.2 Dimensions

Unit (mm)

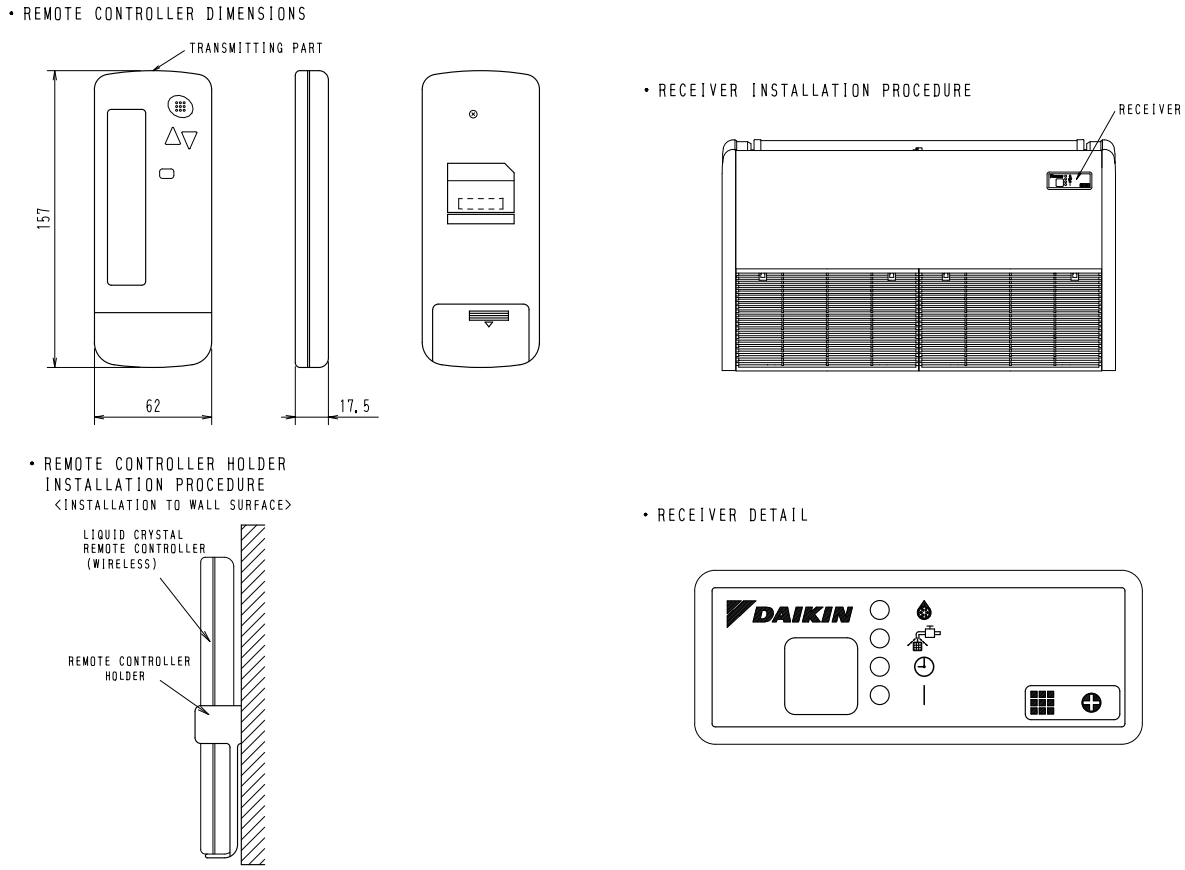

3D028963B

1.6.3 Operation Manual

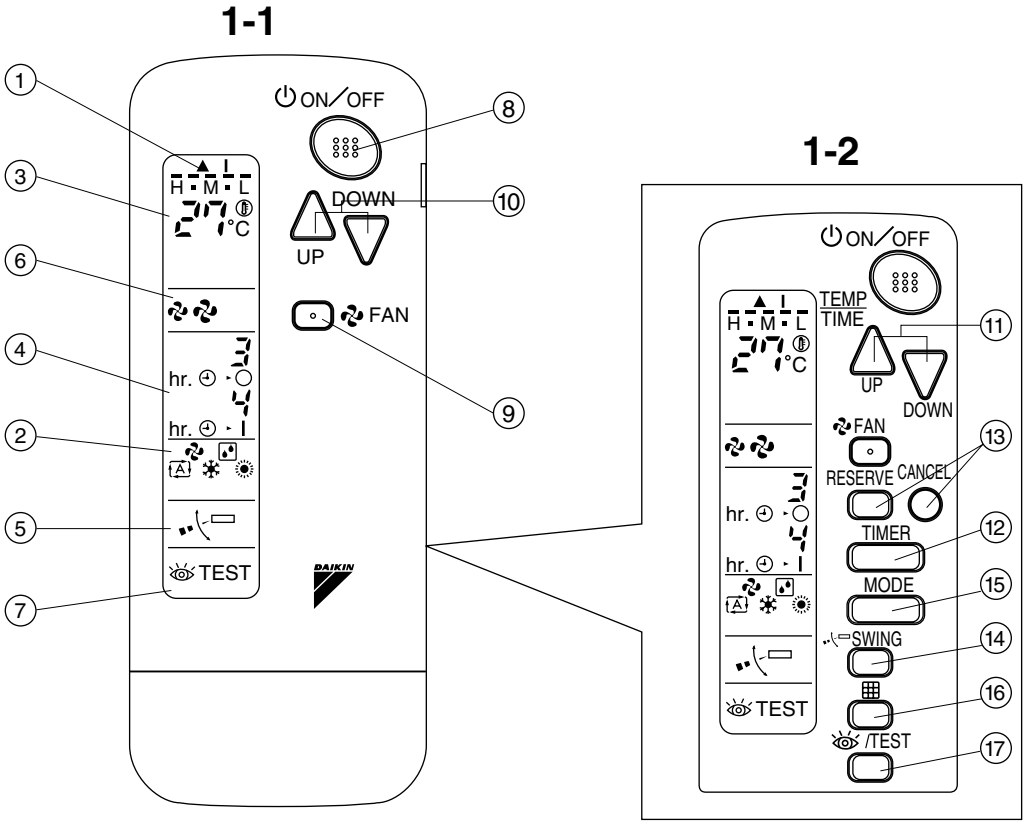

1

COOL/HEAT CHANGEOVER REMOTE CONTROL SWITCH

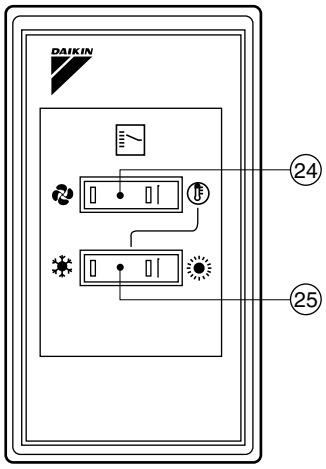

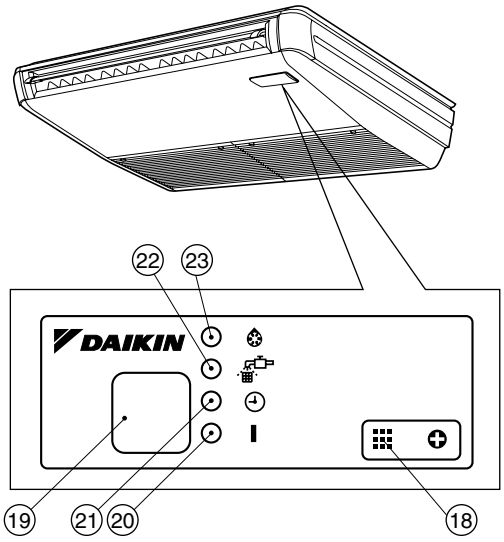

1-3

2

3P107422-8S

1. SAFETY PRECAUTIONS

To gain full advantage of the air conditioner's functions and to avoid malfunction due to mishandling, we recommend that you read this instruction manual carefully before use. This air conditioner is classified under "appliances not accessible to the general public". **The precautions described herein are classified as WARNING and CAUTION. They both contain important information regarding safety. Be sure to observe all precautions without fail.**

⚠ **WARNING** .. Failure to follow these instructions properly may result in personal injury or loss of life.

⚠ **CAUTION** ... Failure to observe these instructions properly may result in property damage or personal injury, which may be serious depending on the circumstances.

After reading, keep this manual in a convenient place so that you can refer to it whenever necessary. If the equipment is transferred to a new user, be sure also to hand over the manual.

⚠ **WARNING**

Be aware that prolonged, direct exposure to cool or warm air from the air conditioner, or to air that is too cool or too warm can be harmful to your physical condition and health.

When the air conditioner is malfunctioning (giving off a burning odor, etc.) turn off power to the unit and contact your local dealer.
Continued operation under such circumstances may result in a failure, electric shocks or fire hazards.

Consult your local dealer to install your equipment.
Doing the work yourself may result in water leakage, electric shocks or fire hazards.

Consult your local dealer regarding modification, repair and maintenance of the air conditioner or the remote controller.
Improper workmanship may result in water leakage, electric shocks or fire hazards.

Do not place objects, including rods, your fingers, etc., in the air inlet or outlet.
Injury may result due to contact with the air conditioner's high-speed fan blades.

Beware of fire in case of refrigerant leakage.
If the air conditioner is not operating correctly, i.e. not generating cool or warm air, refrigerant leakage could be the cause. Consult your dealer for assistance.
The refrigerant within the air conditioner is safe and normally does not leak. However, in the event of a leakage, contact with a naked burner, heater or cooker may result in generation of noxious gas. Do not longer use the air conditioner until a qualified service person confirms that the leakage has been repaired.

Consult your local dealer regarding what to do in case of refrigerant leakage.
When the air conditioner is to be installed in a small room, it is necessary to take proper measures so that the amount of any leaked refrigerant does not exceed the concentration limit in the event of a leakage. Otherwise, this may lead to an accident due to oxygen depletion.

Contact professional personnel about attachment of accessories and be sure to use only accessories specified by the manufacturer.
If a defect results from your own workmanship, it may result in water leaks, electric shock or fire.

Consult your local dealer regarding relocation and reinstallation of the air conditioner.
Improper installation work may result in leakage, electric shocks or fire hazards.

Be sure to use fuses with the correct ampere reading.
Do not use improper fuses, copper or other wires as a substitute, as this may result in electric shock, fire, injury or damage to the unit.

Be sure to install an earth leakage breaker.
Failure to install an earth leakage breaker may result in electric shocks or fire.

Be sure to earth the unit.
Do not earth the unit to a utility pipe, lightning conductor or telephone earth lead. Imperfect earthing may result in electric shocks or fire.
A high surge current from lightning or other sources may cause damage to the air conditioner.

Consult the dealer if the air conditioner submerges owing to a natural disaster, such as a flood or typhoon.
Do not operate the air conditioner in that case, or otherwise a malfunction, electric shock, or fire may result.

Do not start or stop operating the air conditioner with the power supply breaker turned ON or OFF.
Otherwise, fire or water leakage may result. Furthermore, the fan will rotate abruptly if power failure compensation is enabled, which may result in injury.

Do not use the product in the atmosphere contaminated with oil vapor, such as cooking oil or machine oil vapor.
Oil vapor may cause crack damage, electric shocks, or fire.

Do not use the product in places with excessive oily smoke, such as cooking rooms, or in places with flammable gas, corrosive gas, or metal dust.
Using the product in such places may cause fire or product failures.

Do not use flammable materials (e.g., hairspray or insecticide) near the product.
Do not clean the product with organic solvents such as paint thinner.
The use of organic solvents may cause crack damage to the product, electric shocks, or fire.

Be sure to use a dedicated power supply for the air conditioner.
The use of any other power supply may cause heat generation, fire, or product failures.

⚠ CAUTION

Do not use the air conditioner for purposes other than those for which it is intended.
Do not use the air conditioner for cooling precision instruments, food, plants, animals or works of art as this may adversely affect the performance, quality and/or longevity of the object concerned.

Do not remove the outdoor unit's fan guard.
The guard protects against the unit's high speed fan, which may cause injury.

Do not place objects that are susceptible to moisture directly beneath the indoor or outdoor units.
Under certain conditions, condensation on the main unit or refrigerant pipes, air filter dirt or drain blockage may cause dripping, resulting in fouling or failure of the object concerned.

To avoid oxygen depletion, ensure that the room is adequately ventilated if equipment such as a burner is used together with the air conditioner.

After prolonged use, check the unit stand and its mounts for damage.
If left in a damaged condition, the unit may fall and cause injury.

Do not place flammable sprays or operate spray containers near the unit as this may result in fire.

Before cleaning, be sure to stop unit operation, turn the breaker off or remove the power cord.
Otherwise, an electric shock and injury may result.

To avoid electric shocks, do not operate with wet hands.

Do not place appliances that produce naked flames in places exposed to the air flow from the unit as this may impair combustion of the burner.

Do not place heaters directly below the unit, as resulting heat can cause deformation.

Do not allow a child to mount on the outdoor unit or avoid placing any object on it.
Falling or tumbling may result in injury.

Do not block air inlets nor outlets.
Impaired air flow may result in insufficient performance or trouble.

Be sure that children, plants or animals are not exposed directly to airflow from the unit, as adverse effects may ensue.

Do not wash the air conditioner or the remote controller with water, as this may result in electric shocks or fire.

Do not place water containers (flower vases, etc.) on the unit, as this may result in electric shocks or fire.

Do not install the air conditioner at any place where there is a danger of flammable gas leakage.
In the event of a gas leakage, build-up of gas near the air conditioner may result in fire hazards.

Do not put flammable containers, such as spray cans, within 1 m from the blow-off mouth.
The containers may explode because the warm air output of the indoor or outdoor unit will affect them.

The batteries must be removed from the appliance before it is scrapped and they are disposed of safely.

Arrange the drain to ensure complete drainage.
If proper drainage from the outdoor drain pipe does not occur during air conditioner operation, there could be a blockage due to dirt and debris build-up in the pipe. This may result in a water leakage from the indoor unit. Under these circumstances, stop air conditioner operation and consult your dealer for assistance.

The appliance is not intended for use by unattended young children or infirm persons.
Impairment of bodily functions and harm to health may result.

Children should be supervised to ensure that they do not play with the unit or its remote controller.
Accidental operation by a child may result in impairment of bodily functions and harm health.

Do not let children play on or around the outdoor unit.
If they touch the unit carelessly, injury may be caused.

Consult your dealer regarding cleaning the inside of the air conditioner.
Improper cleaning may cause breakage of plastic parts, water leakage and other damage as well as electric shocks.

To avoid injury, do not touch the air inlet or aluminum fins of the unit.

Do not place objects in direct proximity of the outdoor unit and do not let leaves and other debris accumulate around the unit.
Leaves are a hotbed for small animals which can enter the unit. Once in the unit, such animals can cause malfunctions, smoke or fire when making contact with electrical parts.

Never touch the internal parts of the controller.
Do not remove the front panel. Touching certain internal parts will cause electric shocks and damage to the unit. Please consult your dealer about checking and adjustment of internal parts.

Do not leave the remote controller wherever there is a risk of wetting.
If water gets into the remote controller there is a risk of electrical leakage and damage to electronic components.

When using the wireless remote controller, do not put a strong light beam or install an inverter fluorescent lamp near the receiving section on the main unit.
A malfunction may occur.

Watch your steps at the time of air filter cleaning or inspection.
High-place work is required, to which utmost attention must be paid.
If the scaffold is unstable, you may fall or topple down, thus causing injury.

2. NAMES AND FUNCTIONS OF THE OPERATING SECTION (Fig. 1, 2)

1	**DISPLAY " ▲ " (SIGNAL TRANSMISSION)**
	This lights up when a signal is being transmitted.
2	**DISPLAY " " " " " " " " " (OPERATION MODE)**
	This display shows the current OPERATION MODE. For straight cooling type, " " (Auto) and " " (Heating) are not installed.
3	**DISPLAY " " (SET TEMPERATURE)**
	This display shows the set temperature.
4	**DISPLAY " " (PROGRAMMED TIME)**
	This display shows PROGRAMMED TIME of the system start or stop.
5	**DISPLAY " " (AIR FLOW FLAP)**
	Refer to page 9.
6	**DISPLAY " " " " (FAN SPEED)**
	The display shows the set fan speed.
7	**DISPLAY " TEST " (INSPECTION/ TEST OPERATION)**
	When the INSPECTION/TEST OPERATION BUTTON is pressed, the display shows the system mode is in.
8	**ON/OFF BUTTON**
	Press the button and the system will start. Press the button again and the system will stop.
9	**FAN SPEED CONTROL BUTTON**
	Press this button to select the fan speed, HIGH or LOW, of your choice.
10	**TEMPERATURE SETTING BUTTON**
	Use this button for SETTING TEMPERATURE (Operates with the front cover of the remote controller closed.)
11	**PROGRAMMING TIMER BUTTON**
	Use this button for programming "START and/or STOP" time. (Operates with the front cover of the remote controller opened.)
12	**TIMER MODE START/STOP BUTTON**
	Refer to page 9.
13	**TIMER RESERVE/CANCEL BUTTON**
	Refer to page 10.
14	**AIR FLOW DIRECTION ADJUST BUTTON**
	Refer to page 8.
15	**OPERATION MODE SELECTOR BUTTON**
	Press this button to select OPERATION MODE.
16	**FILTER SIGN RESET BUTTON**
	Refer to the section of MAINTENANCE in the operation manual attached to the indoor unit.
17	**INSPECTION/TEST OPERATION BUTTON**
	This button is used only by qualified service persons for maintenance purposes.
18	**EMERGENCY OPERATION SWITCH**
	This switch is readily used if the remote controller does not work.
19	**RECEIVER**
	This receives the signals from the remote controller.
20	**OPERATING INDICATOR LAMP (Red)**
	This lamp stays lit while the air conditioner runs. It flashes when the unit is in trouble.
21	**TIMER INDICATOR LAMP (Green)**
	This lamp stays lit while the timer is set.

3P107422-8S

22	**AIR FILTER CLEANING TIME INDICATOR LAMP (Red)**
	Lights up when it is time to clean the air filter.
23	**DEFROST LAMP (Orange)**
	Lights up when the defrosting operation has started. (For straight cooling type this lamp does not turn on.)
24	**FAN/AIR CONDITIONING SELECTOR SWITCH**
	Set the switch to " " (FAN) for FAN and " " (A/C) for HEAT or COOL.
25	**COOL/HEAT CHANGEOVER SWITCH**
	Set the switch to " " (COOL) for COOL and " " (HEAT) for HEAT.

NOTES

- For the sake of explanation, all indications are shown on the display in Figure 1 contrary to actual running situations.
- Fig. 1-2 shows the remote controller with the front cover opened.
- Fig. 1-3 shows this remote controller can be used in conjunction with the one provided with the *VRV* system.
- If the air filter cleaning time indicator lamp lights up, clean the air filter as explained in the operation manual provided with the indoor unit.
  After cleaning and reinstalling the air filter, press the filter sign reset button on the remote controller. The air filter cleaning time indicator lamp on the receiver will go out.

3. HANDLING FOR WIRELESS REMOTE CONTROLLER

Precautions in handling remote controller

Direct the transmitting part of the remote controller to the receiving part of the air conditioner.

If something blocks the transmitting and receiving path of the indoor unit and the remote controller as curtains, it will not operate.

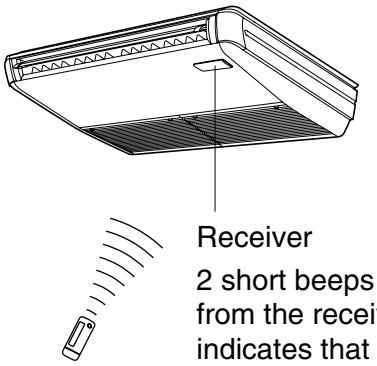

Transmitting distance is approximately 7 m.

Do not drop or get it wet.

It may be damaged.

Never press the button of the remote controller with a hard, pointed object.

The remote controller may be damaged.

Installation site

- It is possible that signals will not be received in rooms that have electronic fluorescent lighting. Please consult with the salesman before buying new fluorescent lights.
- If the remote controller operated some other electrical apparatus, move that machine away or consult your dealer.

Placing the remote controller in the remote controller holder
Install the remote controller holder to a wall or a pillar with the attached screw. (Make sure it transmits)

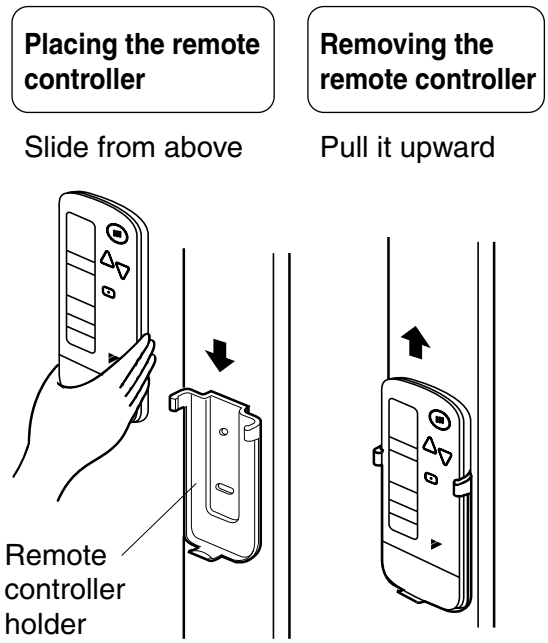

How to put the dry batteries

(1) Remove the back cover of the remote controller to the direction pointed by the arrow mark.

(2) Put the batteries
Use two dry cell batteries (AAA.LR03 (alkaline)). Put dry batteries correctly to fit their (+) and (–).

(3) Close the cover

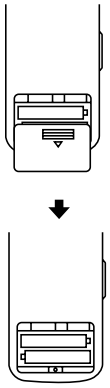

— When to change batteries
Under normal use, batteries last about a year. However, change them whenever the indoor unit doesn't respond or responds slowly to commands, or if the display becomes dark.

[CAUTIONS]
- Replace all batteries at the same time, do not use new and old batteries intermixed.
- In case the remote controller is not used for a long time take out all batteries in order to prevent liquid leak of the battery.

IN THE CASE OF CENTRALIZED CONTROL SYSTEM

If the indoor unit is under centralized control, it is necessary to switch the remote controller's setting.
In this case, contact your DAIKIN dealer.

4. OPERATION PROCEDURE

Refer to figure 1 on page [2]

- Operating procedure varies with heat pump type and cooling only type. Contact your Daikin dealer to confirm your system type.
- To protect the unit, turn on the main power switch 6 hours before operation.
- If the main power supply is turned off during operation, operation will restart automatically after the power turns back on again.

COOLING, HEATING, AUTOMATIC, FAN, AND PROGRAM DRY OPERATION

Operate in the following order.

- AUTOMATIC OPERATION can be selected only by Heat recovery system.
- For cooling only type, "COOLING", and "FAN" and "DRY"operation are able to select.

《FOR SYSTEMS WITHOUT COOL/ HEAT CHANGEOVER REMOTE CONTROL SWITCH》

Refer to figure 1-1, 2 on page [2]

1 OPERATION MODE SELECTOR

Press OPERATION MODE SELECTOR button several times and select the OPERATION MODE of your choice as follows.

- COOLING OPERATION ..... " ❄ "
- HEATING OPERATION ..... " ☀ "
- AUTOMATIC OPERATION ..... " A "
  - In this operation mode, COOL/HEAT changeover is automatically conducted.
- FAN OPERATION..... " "
- DRY OPERATION ..... " "
  - The function of this program is to decrease the humidity in your room with the minimum temperature decrease.
  - Micro computer automatically determines TEMPERATURE and FAN SPEED.
  - This system does not go into operation if the room temperature is below 16˚C.

2 ON/OFF

Press ON/OFF button
OPERATION lamp lights up or goes off and the system starts or stops OPERATION.

NOTE
- Do not turn OFF power immediately after the unit stops. Then, wait no less than 5 minutes.
  Water is leaking or there is something else wrong with the unit.

《FOR SYSTEMS WITH COOL/HEAT CHANGEOVER REMOTE CONTROL SWITCH》

Refer to figure 1-1,3 on page [2]

1 OPERATION MODE SELECTOR

(1) Select OPERATION MODE with the COOL/HEAT CHANGEOVER REMOTE CONTROL SWITCH as follows.

- COOLING OPERATION ..... " "
- HEATING OPERATION ..... " "
- FAN OPERATION..... " "
- DRY OPERATION ..... " "

- See "FOR SYSTEM WITHOUT COOL/ HEAT CHANGEOVER REMOTE CONTROL SWITCH" for details on dry operation.

(2) Press OPERATION MODE SELECTOR button several times and select " "
(This operation is only available during dry operation.)

2 ON/OFF

Press ON/OFF button
OPERATION lamp lights up or goes off and the system starts or stops OPERATION.

NOTE
- Do not turn OFF power immediately after the unit stops. Then, wait no less than 5 minutes.
  Water is leaking or there is something else wrong with the unit.

[EXPLANATION OF HEATING OPERATION]
DEFROST OPERATION

- As the frost on the coil of an outdoor unit increase, heating effect decreases and the system goes into DEFROST OPERATION.
- The fan operation stops and the DEFROST lamp of the indoor unit goes on. After 6 to 8 minutes (maximum 10 minutes) of DEFROST OPERATION, the system returns to HEATING OPERATION.

Heating capacity & Outdoor air temperature

- Heating capacity drops as outdoor air temperature lowers. If feeling cold, use another heater at the same time as this air conditioner.
- Hot air is circulated to warm the room. It will take some time from when the air conditioner is first started until the entire room becomes warm. The internal fan automatically turns at low speed until the air conditioner reaches a certain temperature on the inside. In this situation, all you can do is wait.
- If hot air accumulates on the ceiling and feet are left feeling cold, it is recommended to use a circulator. For details, contact the place of purchase.

ADJUSTMENT

For programming TEMPERATURE, FAN SPEED and AIR FLOW DIRECTION, follow the procedure shown below.

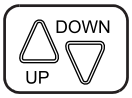

TEMPERATURE SETTING

Press TEMPERATURE SETTING button and program the setting temperature.

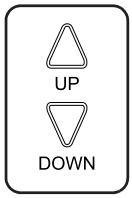

Each time this button is pressed, setting temperature rises 1°C.

Each time this button is pressed, setting temperature lowers 1°C.

In case of automatic operation

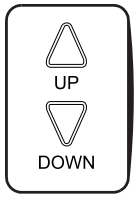

Each time this button is pressed, setting temperature shifts to “H” side.

Each time this button is pressed, setting temperature shifts to “L” side.

[°C]

	H	▪	M	▪	L
Setting temperature	25	23	22	21	19

- The setting is impossible for fan operation.

NOTE

- The setting temperature range of the remote controller is 16 C to 32 C.

FAN SPEED CONTROL

Press FAN SPEED CONTROL button.

High or Low fan speed can be selected. The microchip may sometimes control the fan speed in order to protect the unit.

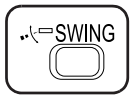

AIR FLOW DIRECTION ADJUST

- There are 2 ways of adjusting the air discharge angle.
  1. A. Up and down adjustment
  2. B. Left and right direction

Fig. 1

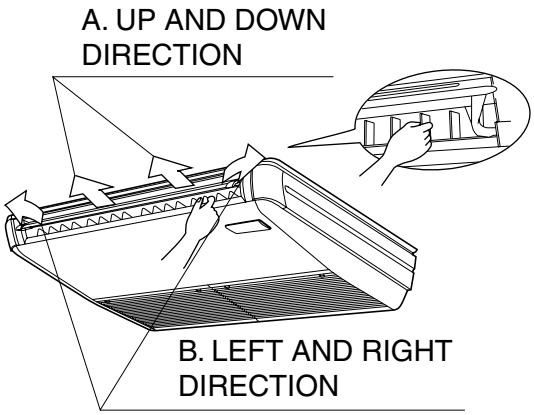

A. UP AND DOWN DIRECTION

- The movable limit of the flap is changeable. Contact your Daikin dealer for details.

Press the AIR FLOW DIRECTION ADJUST button to select the air direction as shown below.

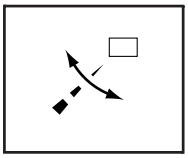

DISPLAY appears and the air flow direction continuously varies. (Automatic swing setting)

Press AIR FLOW DIRECTION ADJUST button to select the air direction of your choice.

DISPLAY vanishes the air flow direction is fixed (Fixed air flow direction setting).

MOVEMENT OF THE AIR FLOW FLAP

For the following conditions, micro computer controls the air flow direction so it may be different from the display.

Operation mode	Cooling	Heating
Operation condition	• When room temperature is lower than the set temperature	• When room temperature is higher than the set temperature • At defrost operation
	• When operating continuously at horizontal air flow direction	

NOTE

- If you try cooling or programmed drying, while the flaps are facing downward, air flow direction may change unexpectedly. There is nothing wrong with the equipment. This serves to prevent dew formed on parts in the air discharge outlet from dripping.

- Operation mode includes automatic operation.

B. LEFT AND RIGHT DIRECTION

- Adjusting air flow direction in the left and right direction. **(Refer to Fig. 1)**

NOTE

- Only make adjustments after you have stopped the air flow direction swing in a position.
- Stop flaps from swinging before trying to angle them. Working while the flaps are moving may get your fingers pinched.

PROGRAM TIMER OPERATION

Operate in the following order.

- The timer is operated in the following two ways.
  Programming the stop time (◷ ▸ ○)
  .... The system stops
  operating after the set time has elapsed.
  Programming the start time (◷ ▸ |)
  .... The system starts
  operating after the set time has elapsed.
- The timer can be programmed a maximum of 72 hours.
- The start and the stop time can be simultaneously programmed.

TIMER MODE START/ STOP

Press the TIMER MODE START/STOP button several times and select the mode on the display.

The display flashes.

For setting the timer stop .... "◷ ▸ ○"

For setting the timer start .... "◷ ▸ |"

2 PROGRAMMING TIME

Press the PROGRAMMING TIME button and set the time for stopping or starting the system.

UP — When this button is pressed, the time advances by 1 hour.

DOWN — When this button is pressed, the time goes backward by 1 hour.

3 TIMER RESERVE

Press the TIMER RESERVE button.
The timer setting procedure ends.
The display or changes from flashing light to a constant light.

4 TIMER CANCEL

Press the TIMER OFF button to cancel programming. The display vanishes.

For example.

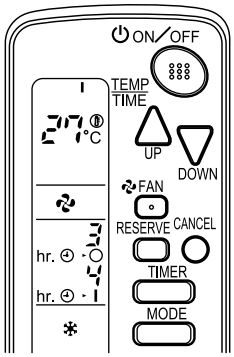

When the timer is programmed to stop the system after 3 hours and start the system after 4 hours, the system will stop after 3 hours and then 1 hour later the system will start.

NOTE

- When the timer is programmed to stop the system after 3 hours and start the system after 4 hours, the system will stop after 3 hours and then 1 hour later the system will start.
- After the timer is programmed, the display shows the remaining time.

HOW TO SET MASTER REMOTE CONTROLLER (For *VRV* system)

- When the system is installed as shown below, it is necessary to designate the master remote controller.

■ For Heat pump system

When one outdoor unit is connected with several indoor units.

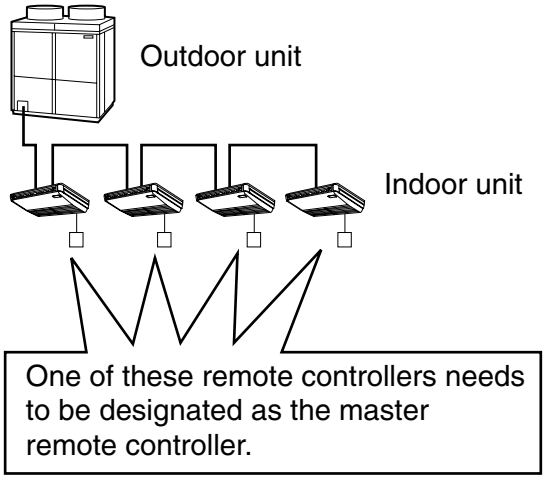

■ For Heat recovery system

When one BS unit is connected with several indoor units.

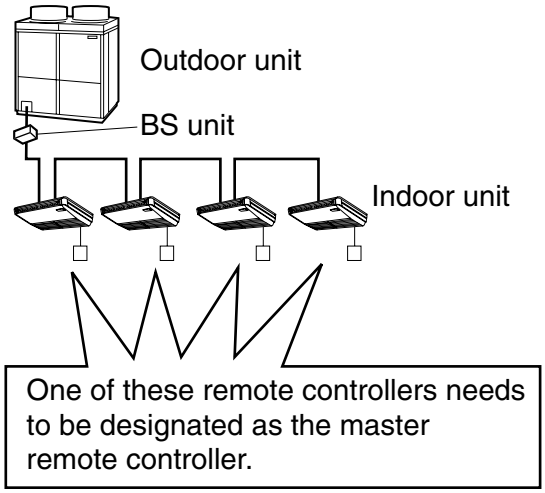

- Only the master remote controller can select HEATING, COOLING or AUTOMATIC (only Heat recovery system) OPERATION.

When the indoor unit with master remote controller is set to “COOL”, you can switch over operation mode between “FAN”, “DRY” and “COOL”.
When the indoor unit with master remote controller is set to “HEAT”, you can switch over operation mode between “FAN” and “HEAT”.
When the indoor unit with master remote controller is set to “FAN”, you cannot switch operation mode.
When attempting settings than that consented above, a “peep” is emitted as a warning.
Only with Heat recovery system, you can set the indoor unit to AUTOMATIC. Attempting to do so, a “peep” will be emitted as a warning.

How to designate the master remote controller

Operate in the following order.

Continuously press the OPERATION MODE SELECTOR button for 4 seconds.

The displays showing “ ◷ ” of all slave indoor unit connected to the same outdoor unit or BS unit flash.

Press the OPERATION MODE SELECTOR button to the indoor unit that you wish to designate as the master remote controller. Then designation is completed. This indoor unit is designated as the master remote controller and the display showing “ ◷ ” vanishes.

- To change settings, repeat steps 1 and 2.

EMERGENCY OPERATION

When the remote controller does not work due to battery failure or the absence thereof, use this switch which is located beside the discharge grille on the main unit. When the remote controller does not work, but the battery low indicator on it is not lit, contact your dealer.

[START]

To press the emergency operation switch.

The machine runs in the previous mode.
The system operates with the previously set air flow direction.

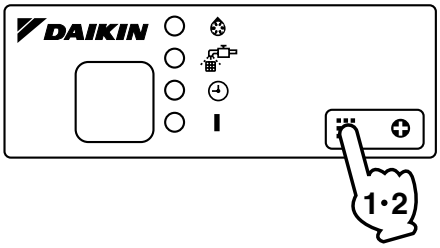

[STOP]

Press the EMERGENCY OPERATION switch again.

PRECAUTIONS FOR GROUP CONTROL SYSTEM OR TWO REMOTE CONTROLLER CONTROL SYSTEM

This system provides two other control systems beside individual control (one remote controller controls one indoor unit) system. Confirm the following if your unit is of the following control system type.

■ **Group control system**
One remote controller controls up to 16 indoor units.
All indoor units are equally set.

■ **Two remote controller control system**
Two remote controllers control one indoor unit. (In case of group control system, one group of indoor units)
The unit follows individual operation.

NOTES
- Cannot have two remote controller control system with only wireless remote controllers. (It will be a two remote controller control system having one wired and one wireless remote controllers.)
- Under two remote controller control system, wireless remote controller cannot control timer operation.
- Only the operating indicator lamp out of 3 other lamps on the indoor unit display functions.

NOTE
- Contact your Daikin dealer in case of changing the combination or setting of group control and two remote controller control systems.

5. NOT MALFUNCTION OF THE AIR CONDITIONER

The following symptoms do not indicate air conditioner malfunction

I. THE SYSTEM DOES NOT OPERATE
- **The system does not restart immediately after the ON/OFF button is pressed.**
  If the OPERATION lamp lights, the system is in normal condition. It does not restart immediately because a safety device operates to prevent overload of the system. After 3 minutes, the system will turn on again automatically.
- **The system does not restart immediately when TEMPERATURE SETTING button is returned to the former position after pushing the button.**
  It does not restart immediately because a safety device operates to prevent overload of the system. After 3 minutes, the system will turn on again automatically.
- **If the reception beep is rapidly repeated 3 times (It sounds only twice when operating normally.)**
  Control is set to the optional controller for centralized control.
- **If the defrost lamp on the indoor unit's display is lit when heating is started.**
  This indication is to warn against cold air being blown from the unit. There is nothing wrong with the equipment.

6. HOW TO DIAGNOSE TROUBLE SPOTS

I. EMERGENCY STOP
When the air conditioner stops in emergency, the run lamp on the indoor unit starts blinking. Take the following steps yourself to read the malfunction code that appears on the display. Contact your dealer with this code. It will help pinpoint the cause of the trouble, speeding up the repair.

Press the INSPECTION/TEST button to select the inspection mode " 0 ".

" 0 " appears on display and blinks. "UNIT" lights up.

Press PROGRAMMING TIMER BUTTON and change the unit number.

Press to change the unit number until the indoor unit beeps and perform the following operation according to the number of beeps.

Number of beeps

3 short beeps .... Perform all steps from 3 to 6.

1 short beep ..... Perform 3 and 6 steps
1 long beep..... Normal state

Press OPERATION MODE SELECTOR BUTTON

" 0 " on the left-hand of the malfunction code blinks.

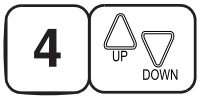

Press PROGRAMMING TIMER BUTTON and change the malfunction code.

Press until the indoor unit beeps twice.

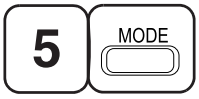

Press OPERATION MODE SELECTOR BUTTON

" 0 " on the right-hand of the malfunction code blinks.

Press PROGRAMMING TIMER BUTTON and change the malfunction code.

Press until the indoor unit makes a long beep.
The malfunction code is fixed when the indoor unit makes a long beep.

Reset of the display

Press OPERATION MODE SELECTOR BUTTON to get the display back to the normal state.

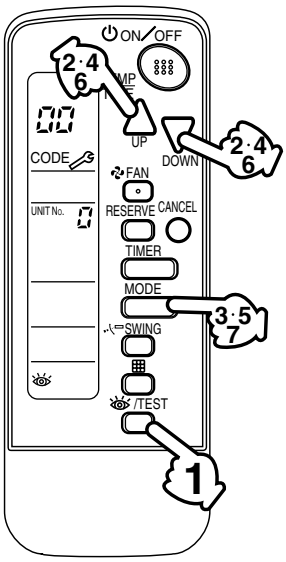

II. IN CASE BESIDES EMERGENCY STOP

1. **The unit does not operate at all.**
   - Check if the receiver is exposed of sunlight or strong light. Keep receiver away from light.
   - Check if there are batteries in the remote controller. Place the batteries.
   - Check if the indoor unit number and wireless remote controller number are equal.

C: 3P107422-8S

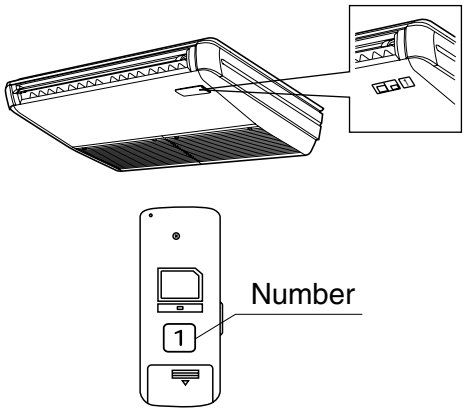

Operate the indoor unit with the remote controller of the same number.
Signal transmitted from a remote controller of a different number cannot be accepted. (If the number is not mentioned, it is considered as “1”)

2. **The system operates but it does not sufficiently cool or heat.**
   - If the set temperature is not proper.
   - If the FAN SPEED is set to LOW SPEED.
   - If the air flow angle is not proper.

Contact the place of purchase in the following case.

WARNING

When you detect a burning odor, shut OFF power immediately and contact the place of purchase. Using the equipment in anything but proper working condition can result in equipment damage, electric shock and/or fire.

[Trouble]

The RUN lamp of the indoor unit is flashing and the unit does not work at all.

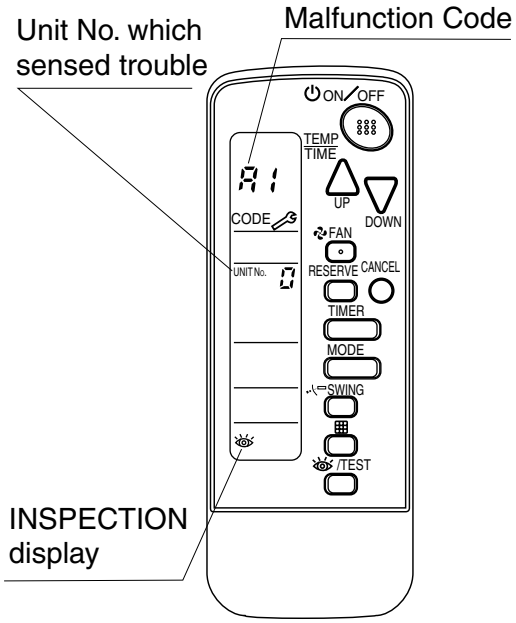

[Remedial action]

Check the malfunction code (A1 - UF) on the remote control and contact the place of purchase. (See page 12.)

Disposal requirements
Batteries supplied with the remote controller are marked with this symbol.
This means that the batteries shall not be mixed with unsorted household waste.
If a chemical symbol is printed beneath the symbol, this chemical symbol means that the battery contains a heavy metal above a certain concentration. Possible chemical symbols are:
■ Pb: lead (>0.004%)
Waste batteries must be treated at a specialized treatment facility for re-use.
By ensuring waste batteries are disposed of correctly, you will help to prevent potential negative consequences for the environment and human health.

1.6.4 Installation Manual

To the installer of the unit:

Instruct the user how to operate the unit following the operation manual.

Caution

- Carefully read the installation manual attached to the indoor unit.
- Confirm that the place where the unit will be installed satisfies the following conditions:
  - Where the wireless remote controller is operable.
    (No strong light source or inverter fluorescent lamp must be near the signal receiver.
    The signal receiver must not be directly exposed to the sun light.)
  - Where the operation display lamp is easily visible.

ACCESSORIES

Check if the following accessories are included with your unit.

Name	Shape	Quantity	Name	Shape	Quantity	Name	Shape	Quantity	Name	Shape	Quantity
Receiver assembly		1 set	Remote controller holder		1 pc.	Dry cell battery LR 03 (AM4)		2 pcs.	Wire harness		1 pc.
									Screw for installing remote controller holder		2 pcs.
Transmission PC board assembly		1 set	Wireless remote controller		1 pc.	Unit No. label	1 2 3 1 2 3 1 2 3	1 pc.	Operation manual		1 pc.
									Clamp		2 pcs.

❶ INSTALLATION OF WIRELESS REMOTE CONTROLLER

<Installation of wireless remote controller>

- Do not throw the wireless remote controller or give strong shock.
  Do not store it where it may get wet or directly exposed to the sun light.
- Direct the wireless remote controller transmitting part toward the receiving part of the unit.
- The distance operable by the wireless remote controller from the unit is approximately 7 meters.
- If an obstacle such as curtains blocks the signal between the receiver and the wireless remote controller, the system does not operate.

- Installing to a wall or a pillar

  Slide the wireless remote controller into the remote controller holder from the top.

  Fix the remote controller holder with the screws.

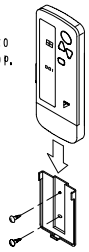

- How to set the batteries

  ① Slide and open the back cover in the direction shown by the arrow.

  ② Set the attached dry cell batteries to the place.
  Make sure to match the polarity (+) (-) of the batteries to the marks indicated where the batteries are to be placed when setting the batteries.

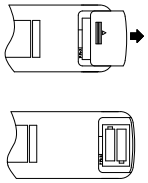

❷ INSTALLATION OF RECEIVER ASSEMBLY

(1) Preparation before installation

Remove the suction grille and the piping side decorative panel according to the installation manual attached to the indoor unit.

(2) Installation of receiver assembly

- Remove the decorative name plate mount of the indoor unit.

① Insert the tip of the flat blade (-) screwdriver into the place shown by black circle ● (both A and B) of the name plate.
② Tilt the screwdriver in the direction shown by the arrow. (both A and B)
③ Pull the entire name plate mount toward yourself and remove one side.
④ Do the same to the remaining two places. (C and D)
⑤ Remove the entire name plate.
(the name plate mount is no longer required.)

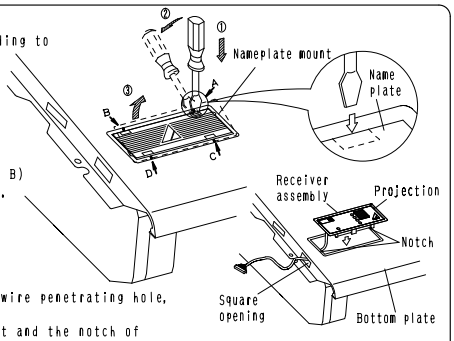

- Installation of receiver assembly

  After passing the wire harness of the receiver through the electric wire penetrating hole, set the receiving part in the direction shown by the arrow.
  (Fix the receiver after matching the projection of the receiving part and the notch of the bottom frame.)

1P067740B

❸ INSTALLATION OF TRANSMISSION PC BOARD ASSEMBLY

①Remove the switch box and its cover mounted at the rear of the unit.
②Mount the transmission PC board assembly on the right side of the indoor unit.
③Connect the wire harness attached to the receiver assembly to the connector (X1A) on the transmission PC board.
Bind the wire harness and the lead wires of the swing motor with the clamp (accessory).
④Connect the attached wire harness to the connector (X2A) on the transmission PC board.
⑤Wire between the transmission PC board of the indoor unit and the switch box.
(Make sure to clamp the wires with the clamp.)
⑥Connect the wires to the connector (for Skyair X24A and for VRV X23A) on the PC board assembly mounted inside the switch box.
(Make sure to clamp the wires with the clamp material.)
⑦Put the switch box and its cover back to their place.

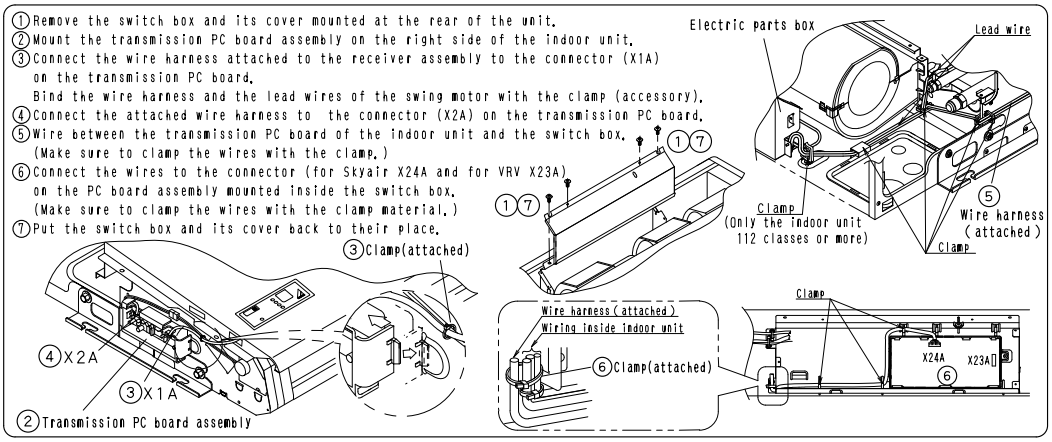

❹ SETTING OF ADDRESS

<Setting the address and the MAIN/SUB stations>

When multiple units are installed in a room and controlled by one wireless remote controller, (including individual remote control in group control) make sure to set the address to both the receiving part and the wireless remote controller.

SETTING PROCEDURE (For setting the remote controllers for other units, see the installation manual attached to the air conditioners.)

(1)Setting the receiver
Set the wireless address switch (SS2) on the transmission PC board according to the table 1.
When using both wired and wireless remote controllers together, change the MAIN/SUB setting switch on the receiving part (SS1) to the SUB side since the wired remote controller will be used as MAIN. (Refer to table 2)

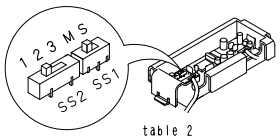

table 1

Unit No.	NO. 1	NO. 2	NO. 3
Wireless address switch (SS2)	1 2 3	1 2 3	1 2 3

table 2

	MAIN	SUB
MAIN/SUB switch (SS1)	M S	M S

(2)Setting the address of wireless remote controller
①Press the [⊞] and [ON/OFF/TEST] buttons at the same time for 4 seconds or more to go into the FIELD SETTING mode.
(The liquid crystal display on the remote controller is shown in the above drawing.)
②Press the [FAN] button and select the multiple setting. (A/b setting)
(Each time the button is pressed, the display changes from "A" to "b".)
③Press the "UP" and "DOWN" buttons for set the address. The address can be set from 1 to 6, but set it from 1 to 3 to correspond with the receiving part. (It does not work when it is set to 4 to 6.)
→1→2→3→4→5→6
④Press the [RESERVE] button and "define" the setting.
⑤Press the [ON/OFF/TEST] button for 1 second or more and the setting is completed. (It returns to normal display.)

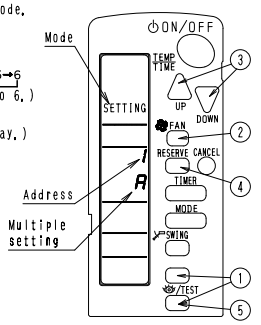

< Miltiple setting (A/b setting) >

When the indoor unit operated by this remote controller is controlled from the outside such as centralized control, sometimes the command of operation changeover and temperature setting is not accepted.
After confirming the customer's request, set the remote controller according to the following table.

Remote controller		Indoor unit	
Multiple setting	Remote controller display	When the operation of the indoor unit is controlled by other air conditioners and equipment	For cases other than those shown left
A: Standard	All items displayed.	Commands other than operation changeover and temperature setting are accepted. Receiving sound is: 1 LONG BEEP or 3 SHORT BEEP	
b: Multi System	Only the items operated remain displayed for a short time	All commands are accepted. Receiving sound is: 2 SHORT BEEPS	

PRECAUTIONS
Set the unit No. of the receiving part and the wireless remote controller the same.
If the numbers are not set the same, the signal from the remote controller cannot be received.

(3)Stick the Unit No. label at the indoor unit as well as on the back of the wireless remote controller.

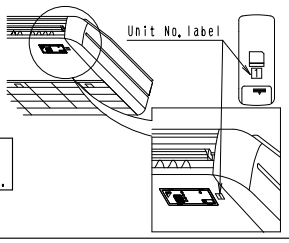

❺ MOUNTING SUCTION GRILLE AND DECORATIVE PANEL

●Put the piping side decorative panel and the suction grille back to the place in the reverse order according to the installation manual attached to the indoor unit.

❻ TEST RUN

●Perform test run according to the installation manual attached to the indoor unit.

1P067740B

1.7 BRC7EA618 / BRC7EA619 (for FXA(Q))

1.7.1 Features

1.7.2 Dimensions

Unit (mm)

• REMOTE CONTROLLER DIMENSIONS

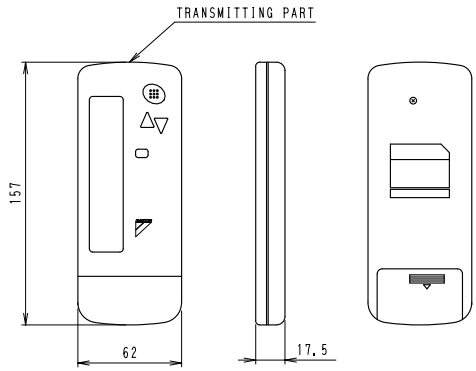

• REMOTE CONTROLLER HOLDER INSTALLATION PROCEDURE
< INSTALLATION TO WALL SURFACE >

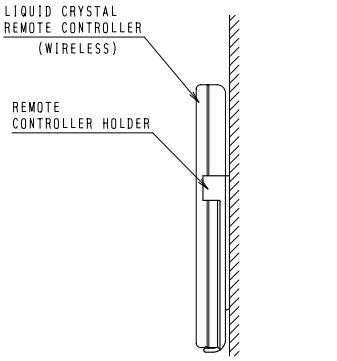

• RECEIVER INSTALLATION PROCEDURE

• RECEIVER DETAIL

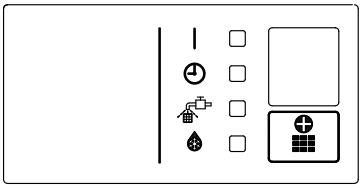

• WIRELESS REMOTE CONTROLLER KIT

WIRELESS REMOTE CONTROLLER KIT	INDOOR UNIT
BRC7E618 BRC7EA618(For H/P)	FXA(Q) FAQ FAY
BRC7E619 BRC7EA619(For C/O)	

C: 3D034905B

1.7.3 Operation Manual

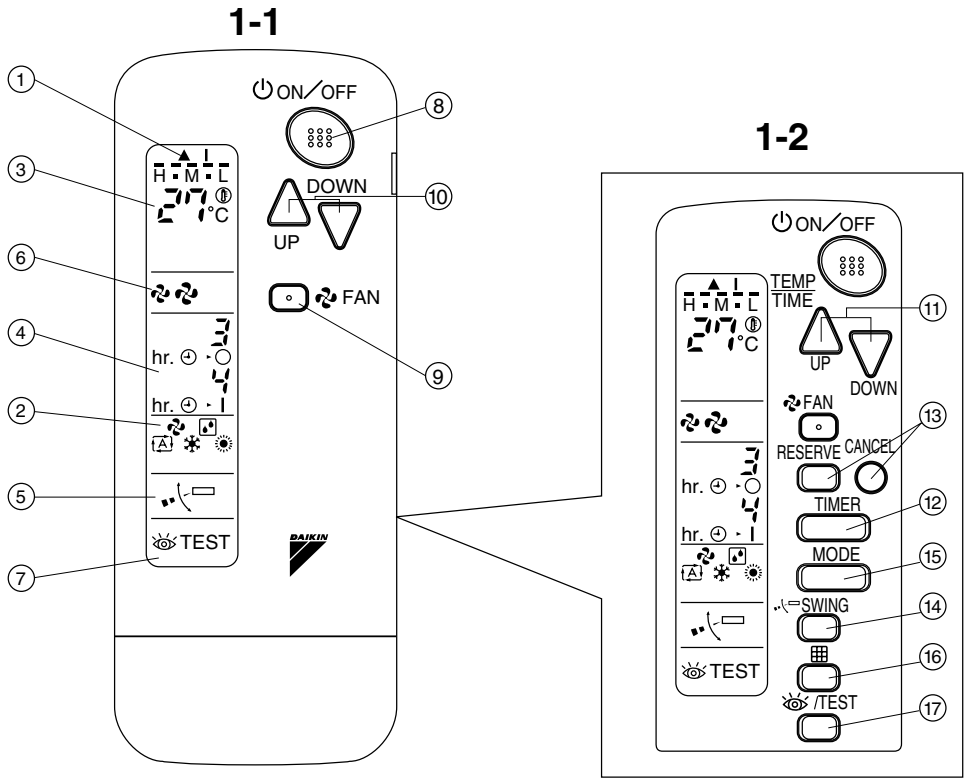

1

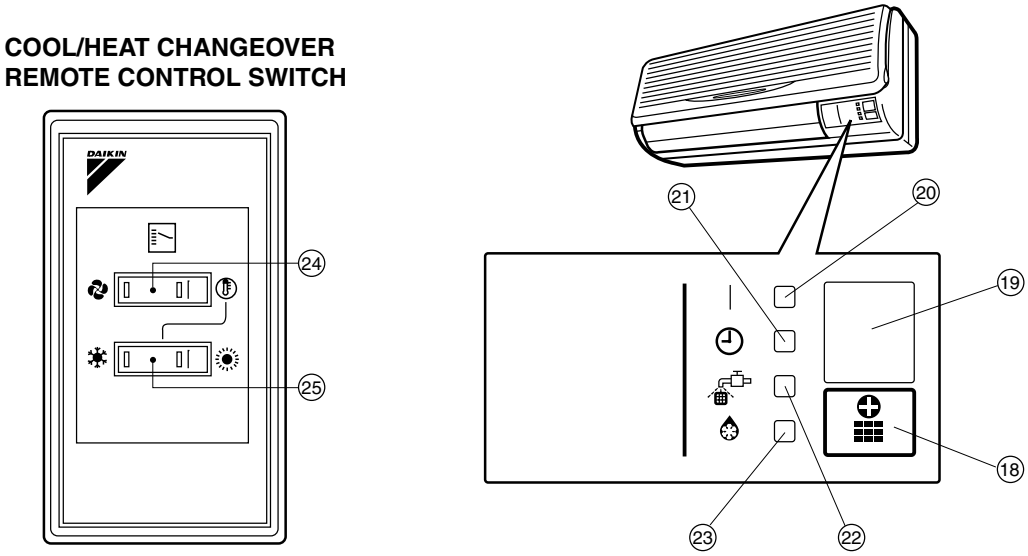

1-3 2

3P107422-10S

CONTENTS

ILLUSTRATION .....[1]
PRIOR TO USE.....[2]

1 SAFETY PRECAUTIONS.....1
2 NAMES AND FUNCTIONS OF THE OPERATING SECTION 4
3 HANDLING FOR WIRELESS REMOTE CONTROLLER.....5
4 OPERATION RANGE.....6
5 OPERATION PROCEDURE 7
6 NOT MALFUNCTION OF THE AIR CONDITIONER 12
7 HOW TO DIAGNOSE TROUBLE SPOTS 12

1. SAFETY PRECAUTIONS

To gain full advantage of the air conditioner's functions and to avoid malfunction due to mishandling, we recommend that you read this instruction manual carefully before use. This air conditioner is classified under "appliances not accessible to the general public".

The precautions described herein are classified as WARNING and CAUTION. They both contain important information regarding safety. Be sure to observe all precautions without fail.

⚠ **WARNING**..... Failure to follow these instructions properly may result in personal injury or loss of life.

⚠ **CAUTION**..... Failure to observe these instructions properly may result in property damage or personal injury, which may be serious depending on the circumstances.

After reading, keep this manual in a convenient place so that you can refer to it whenever necessary. If the equipment is transferred to a new user, be sure also to hand over the manual.

⚠ **WARNING**

Be aware that prolonged, direct exposure to cool or warm air from the air conditioner, or to air that is too cool or too warm can be harmful to your physical condition and health.

When the air conditioner is malfunctioning (giving off a burning odor, etc.) turn off power to the unit and contact your local dealer.
Continued operation under such circumstances may result in a failure, electric shocks or fire hazards.

Consult your local dealer to install your equipment.
Doing the work yourself may result in water leakage, electric shocks or fire hazards.

Consult your local dealer regarding modification, repair and maintenance of the air conditioner or the remote controller.
Improper workmanship may result in water leakage, electric shocks or fire hazards.

Do not place objects, including rods, your fingers, etc., in the air inlet or outlet.
Injury may result due to contact with the air conditioner's high-speed fan blades.

Beware of fire in case of refrigerant leakage.
If the air conditioner is not operating correctly, i.e. not generating cool or warm air, refrigerant leakage could be the cause. Consult your dealer for assistance.
The refrigerant within the air conditioner is safe and normally does not leak. However, in the event of a leakage, contact with a naked burner, heater or cooker may result in generation of noxious gas. Do not longer use the air conditioner until a qualified service person confirms that the leakage has been repaired.

3P107422-10S

Consult your local dealer regarding what to do in case of refrigerant leakage.
When the air conditioner is to be installed in a small room, it is necessary to take proper measures so that the amount of any leaked refrigerant does not exceed the concentration limit in the event of a leakage. Otherwise, this may lead to an accident due to oxygen depletion.

Contact professional personnel about attachment of accessories and be sure to use only accessories specified by the manufacturer.
If a defect results from your own workmanship, it may result in water leaks, electric shock or fire.

Consult your local dealer regarding relocation and reinstallation of the air conditioner.
Improper installation work may result in leakage, electric shocks or fire hazards.

Be sure to use fuses with the correct ampere reading.
Do not use improper fuses, copper or other wires as a substitute, as this may result in electric shock, fire, injury or damage to the unit.

Be sure to install an earth leakage breaker.
Failure to install an earth leakage breaker may result in electric shocks or fire.

Be sure to earth the unit.
Do not earth the unit to a utility pipe, lightning conductor or telephone earth lead. Imperfect earthing may result in electric shocks or fire.
A high surge current from lightning or other sources may cause damage to the air conditioner.

Consult the dealer if the air conditioner submerges owing to a natural disaster, such as a flood or typhoon.
Do not operate the air conditioner in that case, or otherwise a malfunction, electric shock, or fire may result.

Do not start or stop operating the air conditioner with the power supply breaker turned ON or OFF.
Otherwise, fire or water leakage may result. Furthermore, the fan will rotate abruptly if power failure compensation is enabled, which may result in injury.

Do not use the product in the atmosphere contaminated with oil vapor, such as cooking oil or machine oil vapor.
Oil vapor may cause crack damage, electric shocks, or fire.

Do not use the product in places with excessive oily smoke, such as cooking rooms, or in places with flammable gas, corrosive gas, or metal dust.
Using the product in such places may cause fire or product failures.

Do not use flammable materials (e.g., hairspray or insecticide) near the product.
Do not clean the product with organic solvents such as paint thinner.
The use of organic solvents may cause crack damage to the product, electric shocks, or fire.

Be sure to use a dedicated power supply for the air conditioner.
The use of any other power supply may cause heat generation, fire, or product failures.

⚠ CAUTION

Do not use the air conditioner for purposes other than those for which it is intended.
Do not use the air conditioner for cooling precision instruments, food, plants, animals or works of art as this may adversely affect the performance, quality and/or longevity of the object concerned.

Do not remove the outdoor unit's fan guard.
The guard protects against the unit's high speed fan, which may cause injury.

Do not place objects that are susceptible to moisture directly beneath the indoor or outdoor units.
Under certain conditions, condensation on the main unit or refrigerant pipes, air filter dirt or drain blockage may cause dripping, resulting in fouling or failure of the object concerned.

To avoid oxygen depletion, ensure that the room is adequately ventilated if equipment such as a burner is used together with the air conditioner.

After prolonged use, check the unit stand and its mounts for damage.
If left in a damaged condition, the unit may fall and cause injury.

Do not place flammable sprays or operate spray containers near the unit as this may result in fire.

Before cleaning, be sure to stop unit operation, turn the breaker off or remove the power cord.
Otherwise, an electric shock and injury may result.

To avoid electric shocks, do not operate with wet hands.

Do not place appliances that produce naked flames in places exposed to the air flow from the unit as this may impair combustion of the burner.

Do not place heaters directly below the unit, as resulting heat can cause deformation.

Do not allow a child to mount on the outdoor unit or avoid placing any object on it.
Falling or tumbling may result in injury.

Do not block air inlets nor outlets.
Impaired air flow may result in insufficient performance or trouble.

Be sure that children, plants or animals are not exposed directly to airflow from the unit, as adverse effects may ensue.

Do not wash the air conditioner or the remote controller with water, as this may result in electric shocks or fire.

Do not place water containers (flower vases, etc.) on the unit, as this may result in electric shocks or fire.

Do not install the air conditioner at any place where there is a danger of flammable gas leakage.
In the event of a gas leakage, build-up of gas near the air conditioner may result in fire hazards.

Do not put flammable containers, such as spray cans, within 1 m from the blow-off mouth.
The containers may explode because the warm air output of the indoor or outdoor unit will affect them.

The batteries must be removed from the appliance before it is scrapped and they are disposed of safely.

Arrange the drain to ensure complete drainage.
If proper drainage from the outdoor drain pipe does not occur during air conditioner operation, there could be a blockage due to dirt and debris build-up in the pipe. This may result in a water leakage from the indoor unit. Under these circumstances, stop air conditioner operation and consult your dealer for assistance.

The appliance is not intended for use by unattended young children or infirm persons.
Impairment of bodily functions and harm to health may result.

Children should be supervised to ensure that they do not play with the unit or its remote controller.
Accidental operation by a child may result in impairment of bodily functions and harm health.

Do not let children play on or around the outdoor unit.
If they touch the unit carelessly, injury may be caused.

Consult your dealer regarding cleaning the inside of the air conditioner.
Improper cleaning may cause breakage of plastic parts, water leakage and other damage as well as electric shocks.

To avoid injury, do not touch the air inlet or aluminum fins of the unit.

Do not place objects in direct proximity of the outdoor unit and do not let leaves and other debris accumulate around the unit.
Leaves are a hotbed for small animals which can enter the unit. Once in the unit, such animals can cause malfunctions, smoke or fire when making contact with electrical parts.

Never touch the internal parts of the controller.
Do not remove the front panel. Touching certain internal parts will cause electric shocks and damage to the unit. Please consult your dealer about checking and adjustment of internal parts.

Do not leave the remote controller wherever there is a risk of wetting.
If water gets into the remote controller there is a risk of electrical leakage and damage to electronic components.

When using the wireless remote controller, do not put a strong light beam or install an inverter fluorescent lamp near the receiving section on the main unit.
A malfunction may occur.

Watch your steps at the time of air filter cleaning or inspection.
High-place work is required, to which utmost attention must be paid.
If the scaffold is unstable, you may fall or topple down, thus causing injury.

2. NAMES AND FUNCTIONS OF THE OPERATING SECTION (Fig. 1, 2)

1	**DISPLAY " ▲ " (SIGNAL TRANSMISSION)**
	This lights up when a signal is being transmitted.
2	**DISPLAY " " " " " " " " " (OPERATION MODE)**
	This display shows the current OPERATION MODE. For cooling only type, " " (Auto) and " " (Heating) are not installed.
3	**DISPLAY " " (SET TEMPERATURE)**
	This display shows the set temperature.
4	**DISPLAY " " (PROGRAMMED TIME)**
	This display shows PROGRAMMED TIME of the system start or stop.
5	**DISPLAY " " (AIR FLOW FLAP)**
	Refer to page 9.
6	**DISPLAY " " " " (FAN SPEED)**
	The display shows the set fan speed.
7	**DISPLAY " TEST " (INSPECTION/ TEST OPERATION)**
	When the INSPECTION/TEST OPERATION BUTTON is pressed, the display shows the system mode is in.
8	**ON/OFF BUTTON**
	Press the button and the system will start. Press the button again and the system will stop.
9	**FAN SPEED CONTROL BUTTON**
	Press this button to select the fan speed, HIGH or LOW, of your choice.
10	**TEMPERATURE SETTING BUTTON**
	Use this button for SETTING TEMPERATURE (Operates with the front cover of the remote controller closed.)
11	**PROGRAMMING TIMER BUTTON**
	Use this button for programming "START and/or STOP" time. (Operates with the front cover of the remote controller opened.)
12	**TIMER MODE START/STOP BUTTON**
	Refer to page 9.
13	**TIMER RESERVE/CANCEL BUTTON**
	Refer to page 10.
14	**AIR FLOW DIRECTION ADJUST BUTTON**
	Refer to page 8.
15	**OPERATION MODE SELECTOR BUTTON**
	Press this button to select OPERATION MODE.
16	**FILTER SIGN RESET BUTTON**
	Refer to the section of MAINTENANCE in the operation manual attached to the indoor unit.
17	**INSPECTION/TEST OPERATION BUTTON**
	This button is used only by qualified service persons for maintenance purposes.
18	**EMERGENCY OPERATION SWITCH**
	This switch is readily used if the remote controller does not work.

19	**RECEIVER**
	This receives the signals from the remote controller.
20	**OPERATING INDICATOR LAMP (Red)**
	This lamp stays lit while the air conditioner runs. It flashes when the unit is in trouble.
21	**TIMER INDICATOR LAMP (Green)**
	This lamp stays lit while the timer is set.
22	**AIR FILTER CLEANING TIME INDICATOR LAMP (Red)**
	Lights up when it is time to clean the air filter.
23	**DEFROST LAMP (Orange)**
	Lights up when the defrosting operation has started. (For cooling only type this lamp does not turn on.)
24	**FAN/AIR CONDITIONING SELECTOR SWITCH**
	Set the switch to " " (FAN) for FAN and " " (A/C) for HEAT or COOL.
25	**COOL/HEAT CHANGEOVER SWITCH**
	Set the switch to " " (COOL) for COOL and " " (HEAT) for HEAT.

NOTES

- For the sake of explanation, all indications are shown on the display in Figure 1 contrary to actual running situations.
- Fig. 1-2 shows the remote controller with the front cover opened.
- Fig. 1-3 shows this remote controller can be used in conjunction with the one provided with the *VRV* system.
- If the air filter cleaning time indicator lamp lights up, clean the air filter as explained in the operation manual provided with the indoor unit.
  After cleaning and reinstalling the air filter, press the filter sign reset button on the remote controller. The air filter cleaning time indicator lamp on the receiver will go out.
- The Defrost Lamp will flash when the power is turned on. This is not a malfunction.

3. HANDLING FOR WIRELESS REMOTE CONTROLLER

Precautions in handling remote controller

Direct the transmitting part of the remote controller to the receiving part of the air conditioner.

If something blocks the transmitting and receiving path of the indoor unit and the remote controller as curtains, it will not operate.

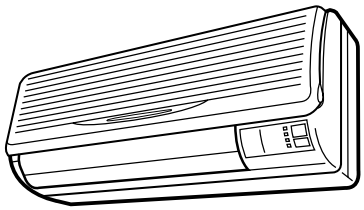

2 short beeps from the receiver indicates that the transmission is properly done.

Transmitting distance is approximately 7 m.

Do not drop or get it wet.

It may be damaged.

Never press the button of the remote controller with a hard, pointed object.

The remote controller may be damaged.

Installation site

- It is possible that signals will not be received in rooms that have electronic fluorescent lighting. Please consult with the salesman before buying new fluorescent lights.
- If the remote controller operated some other electrical apparatus, move that machine away or consult your dealer.

Placing the remote controller in the remote controller holder

Install the remote controller holder to a wall or a pillar with the attached screw. (Make sure it transmits)

Placing the remote controller

Slide from above

Removing the remote controller

Pull it upward

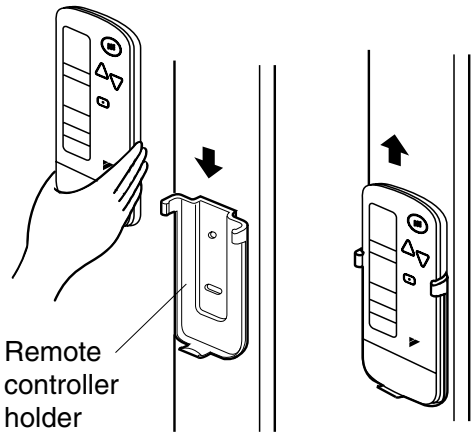

How to put the dry batteries

(1) Remove the back cover of the remote controller to the direction pointed by the arrow mark.

(2) Put the batteries
Use two dry cell batteries (AAA.LR03 (alkaline)). Put dry batteries correctly to fit their (+) and (–).

(3) Close the cover

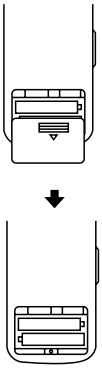

— When to change batteries

Under normal use, batteries last about a year. However, change them whenever the indoor unit doesn't respond or responds slowly to commands, or if the display becomes dark.

[CAUTIONS]

- Replace all batteries at the same time, do not use new and old batteries intermixed.
- In case the remote controller is not used for a long time take out all batteries in order to prevent liquid leak of the battery.

IN THE CASE OF CENTRALIZED CONTROL SYSTEM

If the indoor unit is under centralized control, it is necessary to switch the remote controller's setting. In this case, contact your DAIKIN dealer.

4. OPERATION RANGE

VRV System

See the operation manual provided with the air conditioner.

Split System

If the temperature or the humidity is beyond the following conditions, safety devices may work and the air conditioner may not operate, or sometimes, water may drop from the indoor unit.

COOLING [°C]

	OUT-DOOR UNIT	INDOOR			OUTDOOR TEMPERA-TURE	
		TEMPERA-TURE		HUMID-ITY		
COOLING ONLY TYPE	R71 RP71	DB	20 to 35	80% or below	DB	21 to 46
		WB	14 to 25			
HEAT PUMP TYPE	RY71 RYP71	DB	18 to 35	80% or below	DB	– 5 to 46
		WB	12 to 25			

HEATING [°C]

	OUT-DOOR UNIT	INDOOR TEMPERATURE		OUTDOOR TEM-PERATURE	
HEAT PUMP TYPE	RY71 RYP71	DB	15 to 27	DB	– 9 to 21
				WB	– 10 to 15

DB: Dry bulb temperature
WB: Wet bulb temperature

The setting temperature range of the remote controller is 16°C to 32°C.

5. OPERATION PROCEDURE

Refer to figure 1 on page [1]

- Operating procedure varies with heat pump type and cooling only type. Contact your Daikin dealer to confirm your system type.
- To protect the unit, turn on the main power switch 6 hours before operation.
- If the main power supply is turned off during operation, operation will restart automatically after the power turns back on again.

COOLING, HEATING, AUTOMATIC, FAN, AND PROGRAM DRY OPERATION

Operate in the following order.

- AUTOMATIC OPERATION can be selected only by Heat pump split system or Heat recovery *VRV* system.
- For cooling only type, “COOLING”, and “FAN” and “DRY”operation are able to select.

⟨⟨FOR SYSTEMS WITHOUT COOL/HEAT CHANGEOVER REMOTE CONTROL SWITCH⟩⟩

Refer to figure 1-1, 2 on page [1]

1 MODE **OPERATION MODE SELECTOR**

Press OPERATION MODE SELECTOR button several times and select the OPERATION MODE of your choice as follows.

- ■ COOLING OPERATION ..... “ ❄ ”
- ■ HEATING OPERATION ..... “ ☀ ”
- ■ AUTOMATIC OPERATION ..... “ A ”
  - In this operation mode, COOL/HEAT changeover is automatically conducted.
- ■ FAN OPERATION ..... “ ”
- ■ DRY OPERATION ..... “ ”
  - The function of this program is to decrease the humidity in your room with the minimum temperature decrease.
  - Micro computer automatically determines TEMPERATURE and FAN SPEED.
  - This system does not go into operation if the room temperature is below 16°C.

2 ON/OFF **ON/OFF**

Press ON/OFF button

OPERATION lamp lights up or goes off and the system starts or stops OPERATION.

NOTE

- Do not turn OFF power immediately after the unit stops. Then, wait no less than 5 minutes.
  Water is leaking or there is something else wrong with the unit.

⟨⟨FOR SYSTEMS WITH COOL/HEAT CHANGEOVER REMOTE CONTROL SWITCH⟩⟩

Refer to figure 1-1,3 on page [1]

1 **OPERATION MODE SELECTOR**

(1) Select OPERATION MODE with the COOL/HEAT CHANGEOVER REMOTE CONTROL SWITCH as follows.

- ■ COOLING OPERATION ..... “ ”
- ■ HEATING OPERATION ..... “ ”
- ■ FAN OPERATION ..... “ ”
- ■ DRY OPERATION ..... “ ”

- See “FOR SYSTEM WITHOUT COOL/HEAT CHANGEOVER REMOTE CONTROL SWITCH” for details on dry operation.

(2) Press OPERATION MODE SELECTOR button several times and select " " (This operation is only available during dry operation.)

ON/OFF

Press ON/OFF button

OPERATION lamp lights up or goes off and the system starts or stops OPERATION.

NOTE

- Do not turn OFF power immediately after the unit stops. Then, wait no less than 5 minutes.
  Water is leaking or there is something else wrong with the unit.

[EXPLANATION OF HEATING OPERATION]
DEFROST OPERATION

- As the frost on the coil of an outdoor unit increase, heating effect decreases and the system goes into DEFROST OPERATION.
- The fan operation stops and the DEFROST lamp of the indoor unit goes on. After 6 to 8 minutes (maximum 10 minutes) of DEFROST OPERATION, the system returns to HEATING OPERATION.

Heating capacity & Outdoor air temperature

- Heating capacity drops as outdoor air temperature lowers. If feeling cold, use another heater at the same time as this air conditioner.
- Hot air is circulated to warm the room. It will take some time from when the air conditioner is first started until the entire room becomes warm. The internal fan automatically turns at low speed until the air conditioner reaches a certain temperature on the inside. In this situation, all you can do is wait.
- If hot air accumulates on the ceiling and feet are left feeling cold, it is recommended to use a circulator. For details, contact the place of purchase.

ADJUSTMENT

For programming TEMPERATURE, FAN SPEED and AIR FLOW DIRECTION, follow the procedure shown below.

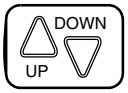

TEMPERATURE SETTING

Press TEMPERATURE SETTING button and program the setting temperature.

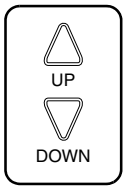

Each time this button is pressed, setting temperature rises 1°C.

Each time this button is pressed, setting temperature lowers 1°C.

In case of automatic operation

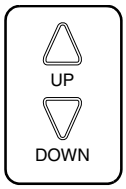

Each time this button is pressed, setting temperature shifts to "H" side.

Each time this button is pressed, setting temperature shifts to "L" side.

[°C]

	H	▪	M	▪	L
Setting temperature	25	23	22	21	19

- The setting is impossible for fan operation.

NOTE

- The setting temperature range of the remote controller is 16°C to 32°C.

FAN SPEED CONTROL

Press FAN SPEED CONTROL button.

High or Low fan speed can be selected.
The microchip may sometimes control the fan speed in order to protect the unit.

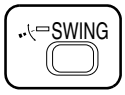

AIR FLOW DIRECTION ADJUST

Press the AIR FLOW DIRECTION ADJUST button to select the air direction as shown below.

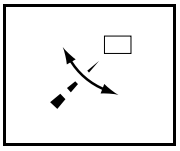

DISPLAY appears and the air flow direction continuously varies. (Automatic swing setting)

Press AIR FLOW DIRECTION ADJUST button to select the air direction of your choice.

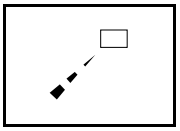

DISPLAY vanishes the air flow direction is fixed (Fixed air flow direction setting).

Adjusting left/right air flow direction

Angle the flaps to the left/right from the knob, as wanted or as needed to air condition the room.

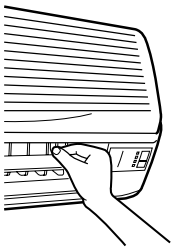

NOTE

- Stop flaps from swinging before trying to angle them. Working while the flaps are moving may get your fingers pinched.

MOVEMENT OF THE AIR FLOW FLAP

For the following conditions, micro computer controls the air flow direction so it may be different from the display.

Operation mode	Cooling	Heating
Operation conditions	• When operating continuously at downward air flow direction	• When room temperature is higher than the set temperature • At defrost operation (The flaps blow horizontally to avoid blowing cold air directly on the occupants of the room.)

NOTE

- If you try cooling or programmed drying, while the flaps are facing downward, air flow direction may change unexpectedly. There is nothing wrong with the equipment. This serves to prevent dew formed on parts in the air discharge outlet from dripping.
- Operation mode includes automatic operation.

PROGRAM TIMER OPERATION

Operate in the following order.

- The timer is operated in the following two ways.
  Programming the stop time (◷ ▸ ○)
  .... The system stops operating after the set time has elapsed.
  Programming the start time (◷ ▸ |)
  .... The system starts operating after the set time has elapsed.
- The timer can be programmed a maximum of 72 hours.
- The start and the stop time can be simultaneously programmed.

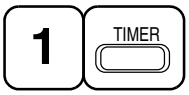

TIMER MODE START/STOP

Press the TIMER MODE START/STOP button several times and select the mode on the display.

The display flashes.

For setting the timer stop .... "◷ ▸ ○"

For setting the timer start .... "◷ ▸ |"

PROGRAMMING TIME

Press the PROGRAMMING TIME button and set the time for stopping or starting the system.

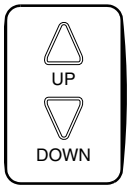

When this button is pressed, the time advances by 1 hour.

When this button is pressed, the time goes backward by 1 hour.

3 RESERVE TIMER RESERVE

Press the TIMER RESERVE button.
The timer setting procedure ends.
The display changes from flashing light to a constant light.

4 CANCEL TIMER CANCEL

Press the TIMER OFF button to cancel programming. The display vanishes.

For example.

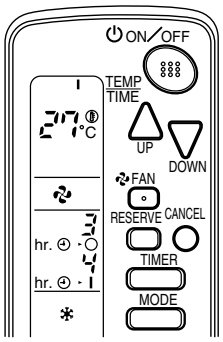

When the timer is programmed to stop the system after 3 hours and start the system after 4 hours, the system will stop after 3 hours and then 1 hour later the system will start.

NOTE
- After the timer is programmed, the display shows the remaining time.

HOW TO SET MASTER REMOTE CONTROLLER (For *VRV* system)

- When the system is installed as shown below, it is necessary to designate the master remote controller.

■ For Heat pump system
When one outdoor unit is connected with several indoor units.

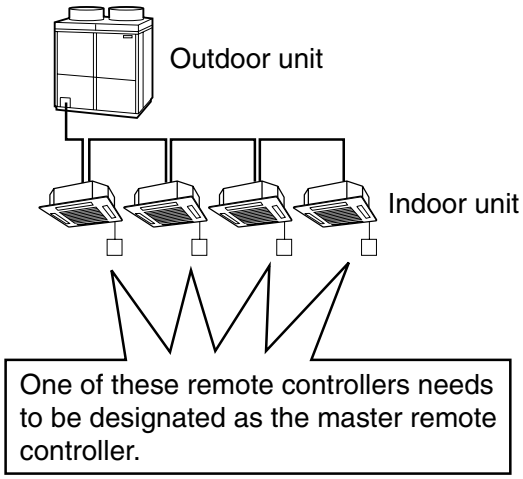

■ For Heat recovery system
When one BS unit is connected with several indoor units.

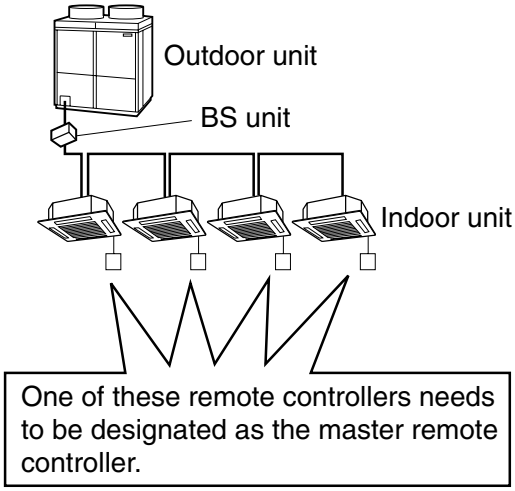

- Only the master remote controller can select HEATING, COOLING or AUTOMATIC (only Heat recovery system) OPERATION.

When the indoor unit with master remote controller is set to “COOL”, you can switch over operation mode between “FAN”, “DRY” and “COOL”.
When the indoor unit with master remote controller is set to “HEAT”, you can switch over operation mode between “FAN” and “HEAT”.
When the indoor unit with master remote controller is set to “FAN”, you cannot switch operation mode.

When attempting settings than that consented above, a “peep” is emitted as a warning.
Only with Heat recovery system, you can set the indoor unit to AUTOMATIC. Attempting to do so, a “peep” will be emitted as a warning.

How to designate the master remote controller

Operate in the following order.

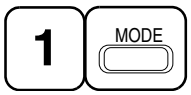

Continuously press the OPERATION MODE SELECTOR button for 4 seconds.

The displays showing “ ◷ ” of all slave indoor unit connected to the same outdoor unit or BS unit flash.

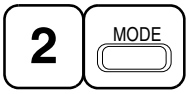

Press the OPERATION MODE SELECTOR button to the indoor unit that you wish to designate as the master remote controller. Then designation is completed. This indoor unit is designated as the master remote controller and the display showing “ ◷ ” vanishes.

- To change settings, repeat steps 1 and 2.

EMERGENCY OPERATION

When the remote controller does not work due to battery failure or the absence thereof, use this switch which is located beside the discharge grille on the main unit. When the remote controller does not work, but the battery low indicator on it is not lit, contact your dealer.

[START]

To press the emergency operation switch.

The machine runs in the previous mode.
The system operates with the previously set air flow direction.

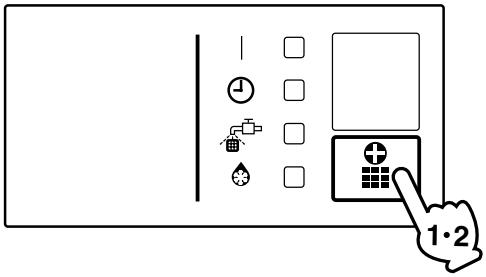

[STOP]

Press the EMERGENCY OPERATION switch again.

PRECAUTIONS FOR GROUP CONTROL SYSTEM OR TWO REMOTE CONTROLLER CONTROL SYSTEM

This system provides two other control systems beside individual control (one remote controller controls one indoor unit) system. Confirm the following if your unit is of the following control system type.

- **Group control system**
  One remote controller controls up to 16 indoor units.
  All indoor units are equally set.
- **Two remote controller control system**
  Two remote controllers control one indoor unit. (In case of group control system, one group of indoor units)
  The unit follows individual operation.

NOTES

- Cannot have two remote controller control system with only wireless remote controllers. (It will be a two remote controller control system having one wired and one wireless remote controllers.)
- Under two remote controller control system, wireless remote controller cannot control timer operation.
- Only the operating indicator lamp out of 3 other lamps on the indoor unit display functions.

NOTE

- Contact your Daikin dealer in case of changing the combination or setting of group control and two remote controller control systems.

6. NOT MALFUNCTION OF THE AIR CONDITIONER

The following symptoms do not indicate air conditioner malfunction

I. THE SYSTEM DOES NOT OPERATE

- **The system does not restart immediately after the ON/OFF button is pressed.**
  If the OPERATION lamp lights, the system is in normal condition. It does not restart immediately because a safety device operates to prevent overload of the system. After 3 minutes, the system will turn on again automatically.
- **The system does not restart immediately when TEMPERATURE SETTING button is returned to the former position after pushing the button.**
  It does not restart immediately because a safety device operates to prevent overload of the system. After 3 minutes, the system will turn on again automatically.
- **If the reception beep is rapidly repeated 3 times (It sounds only twice when operating normally.)**
  Control is set to the optional controller for centralized control.
- **If the defrost lamp on the indoor unit's display is lit when heating is started.**
  This indication is to warn against cold air being blown from the unit. There is nothing wrong with the equipment.

7. HOW TO DIAGNOSE TROUBLE SPOTS

I. EMERGENCY STOP

When the air conditioner stops in emergency, the run lamp on the indoor unit starts blinking. Take the following steps yourself to read the malfunction code that appears on the display. Contact your dealer with this code. It will help pinpoint the cause of the trouble, speeding up the repair.

Press the INSPECTION/TEST button to select the inspection mode " 0 ".

" 0 " appears on display and blinks. "UNIT" lights up.

Press PROGRAMMING TIMER BUTTON and change the unit number.

Press to change the unit number until the indoor unit beeps and perform the following operation according to the number of beeps.

Number of beeps

3 short beeps .... Perform all steps from 3 to 6.

1 short beep ..... Perform 3 and 6 steps
1 long beep..... Normal state

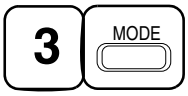

Press OPERATION MODE SELECTOR BUTTON

" 0 " on the left-hand of the malfunction code blinks.

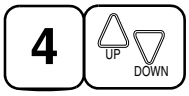

Press PROGRAMMING TIMER BUTTON and change the malfunction code.

Press until the indoor unit beeps twice.

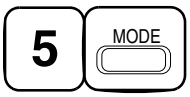

Press OPERATION MODE SELECTOR BUTTON

" 0 " on the right-hand of the malfunction code blinks.

Press PROGRAMMING TIMER BUTTON and change the malfunction code.

Press until the indoor unit makes a long beep.
The malfunction code is fixed when the indoor unit makes a long beep.

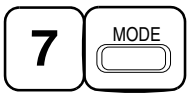

Reset of the display

Press OPERATION MODE SELECTOR BUTTON to get the display back to the normal state.

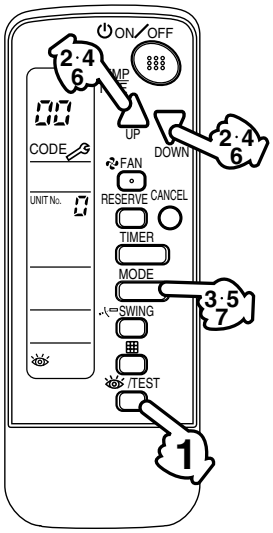

II. IN CASE BESIDES EMERGENCY STOP

1. **The unit does not operate at all.**
   - Check if the receiver is exposed of sunlight or strong light. Keep receiver away from light.
   - Check if there are batteries in the remote controller. Place the batteries.
   - Check if the indoor unit number and wireless remote controller number are equal.

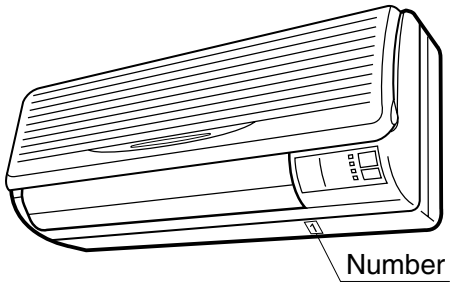

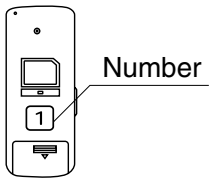

Operate the indoor unit with the remote controller of the same number.
Signal transmitted from a remote controller of a different number cannot be accepted. (If the number is not mentioned, it is considered as "1")

2. **The system operates but it does not sufficiently cool or heat.**
   - If the set temperature is not proper.
   - If the FAN SPEED is set to LOW SPEED.
   - If the air flow angle is not proper.

Contact the place of purchase in the following case.

⚠ WARNING

When you detect a burning odor, shut OFF power immediately and contact the place of purchase. Using the equipment in anything but proper working condition can result in equipment damage, electric shock and/or fire.

[Trouble]

The RUN lamp of the indoor unit is flashing and the unit does not work at all.

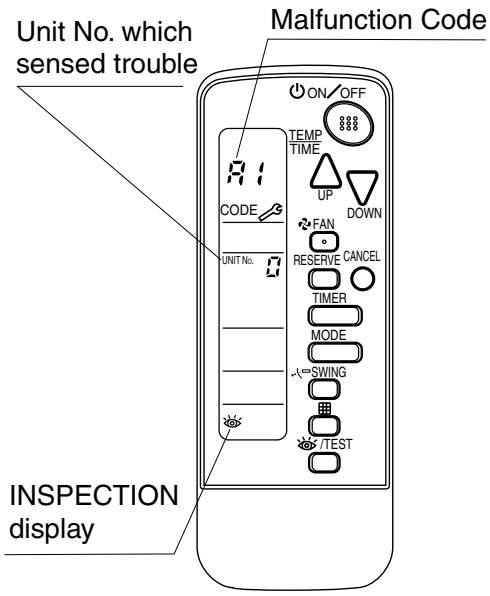

[Remedial action]

Check the malfunction code (A1 - UF) on the remote controller and contact the place of purchase. (See page 12.)

1.7.4 Installation Manual

DAIKIN

BRC7E618 BRC7E619	BRC7EA618 BRC7EA619	Wireless Remote Controller Kit	Installation manual

CONTENTS

1. SAFETY CONSIDERATIONS 1
2. BEFORE INSTALLATION 2
3. REMOTE CONTROLLER INSTALLATION 2
4. RECEIVER INSTALLATION 3
5. FIELD SETTING 7
6. TEST OPERATION 7

1. SAFETY CONSIDERATIONS

Please read this “SAFETY CONSIDERATIONS” carefully before installing air conditioning equipment and be sure to install it correctly. After completing the installation, make sure at start up operation that the unit operates properly. Please instruct the customer how to operate the unit and keep maintenance.

Meaning of caution symbols

⚠ **CAUTION** ..... If the caution is not observed, it may cause injury or damage to equipment.

NOTE ..... These instructions will ensure proper use of the equipment.

⚠ **CAUTION**

- Refer also to the installation manual attached to the indoor unit.
- Confirm that following conditions are satisfied prior to installation.
  - Ensure that noting interrupts the operation of the wireless remote controller. (Ensure that there is neither a source of light nor fluorescent lamp near the receiver. Also, ensure that the receiver is not exposed of direct sun light.)
  - Ensure that the operation display lamp and other indicators are easy to see.

2. BEFORE INSTALLATION

2-1 ACCESSORIES

Check if the following accessories are included with your unit.

Name	Receiver		(3) Relay harness - long	(4) Relay harness - short	Wireless remote controller	Screw
	(1) Light receiver assembly	(2) Transmission PC-board				
Quantity	1 pc.	1 pc.	1 pc.	1 pc.	1 pc.	2 pcs.
Shape	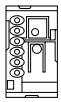	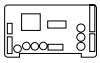			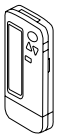	

Name	Remote controller holder	(5) Unit No. nameplate	(6) Receiver label	Dry cell battery LR03 (AM4)	(7) Clamp
Quantity	1 pc.	1 pc.	1 pc.	2 pcs.	1 pc.
Shape	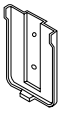				

Name	Operation manual	Installation manual
Quantity	1 pc.	1 pc.

2-2 NOTE TO THE INSTALLER

- Be sure to instruct the customer how to properly operate the system showing him/her the attached operation manual.

3. REMOTE CONTROLLER INSTALLATION

〈Installing wireless remote controller〉

- Do not throw the remote controller or impose large shocks. Also, do not store where it may be exposed to moisture or direct sunlight.
- When operating, point the transmitting part of the remote controller in the direction of the receiver.
- The direct transmitting distance of the remote controller is approximately 7 meters.
- The signal cannot be transmitted if something such as curtains blocks the receiver and the remote controller.

- **Installing to a wall or a pillar**
  1. Fix the remote controller holder with the screws.
  2. Slide the remote controller into the remote controller holder from the top.

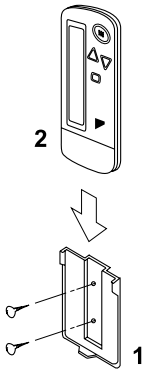

- **How to insert the batteries**
  1. Open the back cover of the remote controller by sliding it in the direction of the arrow.
  2. Insert the attached dry cell batteries. Properly insert, set the batteries by matching the (+) and (–) polarity marks as indicated. Then close the back cover as before.

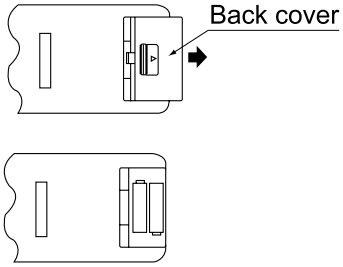

4. RECEIVER INSTALLATION

(1) Preparations before installation

Remove the service lid and the front grill. See the installation manual that came with the main indoor unit for details on removal.

(2) Determination of address and MAIN/SUB remote controller.

If setting multiple wireless remote controllers to operate in one room, perform address setting for the receiver and the wireless remote controller.
If setting multiple wired remote controllers in one room, change the MAIN/SUB switch of the receiver.

SETTING PROCEDURE

1. Setting the receiver

Set the wireless address switch (SS2) on the transmission PC-board (2) according to the table below.

Unit No.	No. 1	No. 2	No. 3
Wireless address switch (SS2)	1 2 3	1 2 3	1 2 3

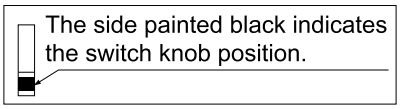

When using both a wired and a wireless remote controller for 1 indoor unit, the wired controller should be set to MAIN. Therefore, set the MAIN/SUB switch (SS1) of the receiver to SUB.
(The wired remote controller will be “MAIN”.)

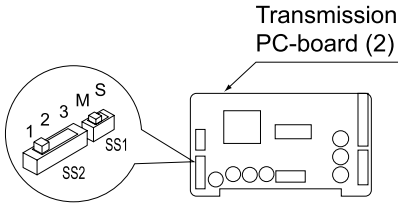

	MAIN	SUB
MAIN/SUB switch (SS1)	M S	M S

2. Setting the address of wireless remote controller (It is factory set to "1")

⟨Setting from the remote controller⟩

1. Hold down the [⊞] button and the [/TEST] button for at least 4 seconds to get the Field Set mode. (Indicated in the display area in the figure at right.)
2. Press the [FAN] button and select a multiple setting (A/b). Each time the button is pressed the display switches between "A" and "b".
3. Press the " △ UP " button and " ▽ DOWN " button to set the address.

   →1→2→3→4→5→6

   Address can be set from 1 to 6, but set it to 1 ~ 3 and to same address as the receiver. (The receiver does not work with address 4 ~ 6.)
4. Press the [RESERVE] button to enter the setting.
5. Hold down the [/TEST] button for at least 1 second to quit the Field Set mode and return to the normal display.

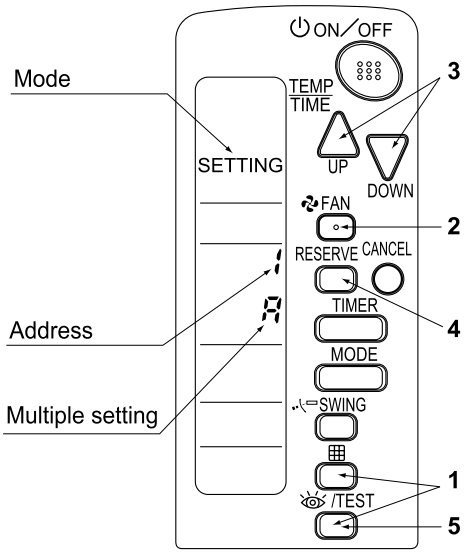

Multiple settings A/b

When the indoor unit is being operating by outside control (central remote controller, etc.), it sometimes does not respond to ON/OFF and temperature setting commands from this remote controller. Check what setting the customer wants and make the multiple setting as shown below.

Remote controller		Movement when the operation is controlled by the other air conditioners and equipment
Multiple setting	Remote controller display	
A: Standard	All items displayed.	When operation changeover, temperature setting or the like is carried out from the remote controller, the indoor unit rejects the instruction. (Signal receiving sound "peeh" or "pick-pick-pick") As a result, a discrepancy between the operation state of the indoor unit and the indication of the remote controller display occurs.
b: Multi System	Operations remain displayed shortly after execution.	All commands accepted. (Signal receiving sound "pick-pick") Since the indication of the remote controller is turned off, no discrepancy such as mentioned above occurs.

3. Attach the included unit No. nameplate (5) to the front grill on the indoor unit and the back of the wireless remote controller.

[PRECAUTIONS]

Set the Unit No. of the receiver and the wireless remote controller to be equal. If the settings differs, the signal from the remote controller cannot be transmitted.

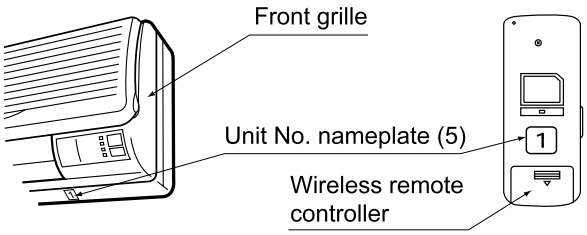

(3) Attaching the receiver

1. Connect the included relay harness – long (3) and relay harness – short (4) relay harnesses to the connector on the transmission PC-board (2).

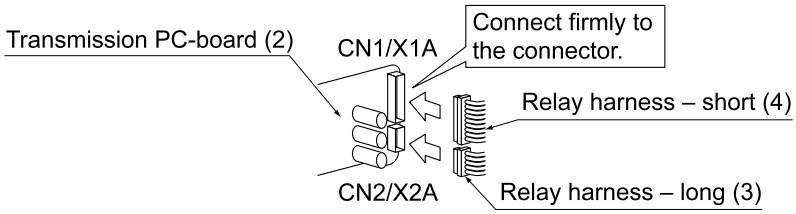

2. Following the figure, insert transmission PC-board (2) into tab **1**, then insert into tab **2** while pushing tab **1** in the direction of the arrow.

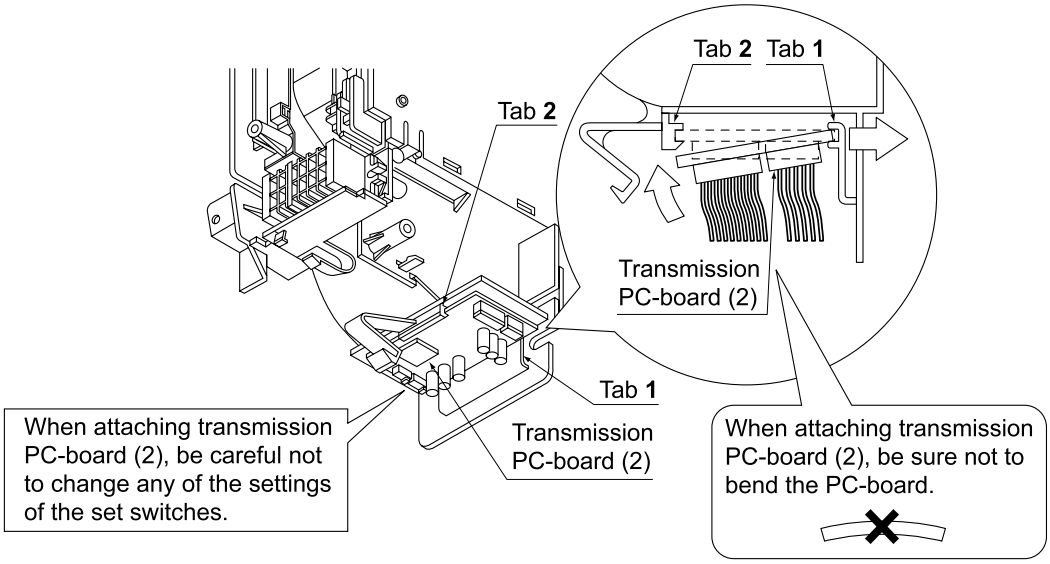

3. Attach the included light receiver assembly (1) to the 2 tabs on the indoor unit, as per the figure.

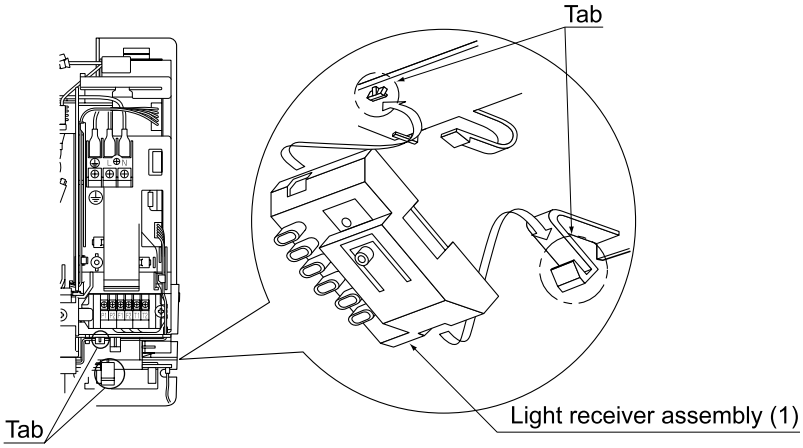

4. Connect the relay harnesses which were connected to the transmission PC-board (2) in step **1.** as follows.
- Relay harness – long (3) to connector X24A on the indoor unit PC-board
- Relay harness – short (4) to connector CN1/X1A on the light receiver assembly (1)

After making these connection, clamp down relay harness – long (3) and relay harness – short (4) relay harnesses using the included clamp (7).

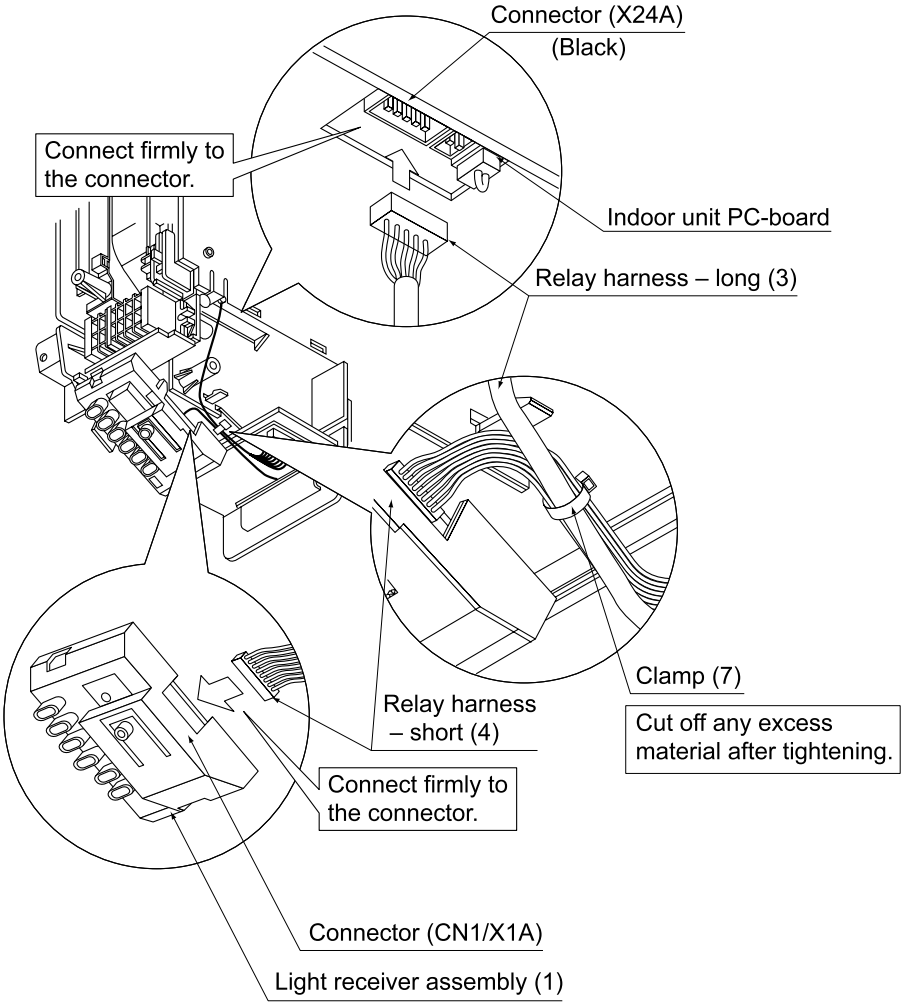

(4) Attaching the receiver label
- Remove label on the front grill. Detach the adhesive.
- Attach the receiver label (6) as the main indoor unit.

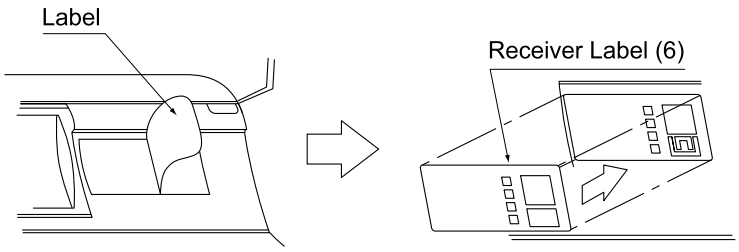

Following the installation manual that came with the main indoor unit, attach the front grill.

5. FIELD SETTING

If optional accessories are mounted on the indoor unit, the indoor unit setting may have to be changed. Refer to the instruction manual (optional hand book) for each optional accessory.

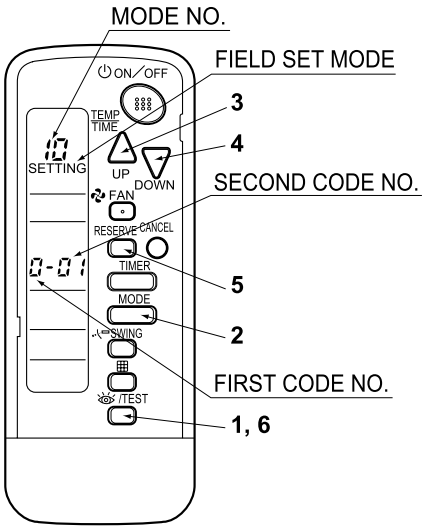

Procedure

1. When in the normal mode, press the /TEST button for a minimum of four seconds, and the FIELD SET MODE is entered.
2. Select the desired MODE NO. with the MODE button.
3. Push the " UP " button and select the FIRST CODE NO.
4. Push the " DOWN " button and select the SECOND CODE NO.
5. Push the RESERVE button and the present settings are SET.
6. Push the /TEST button to return to the NORMAL MODE.

(Example)
If the time to clean air filter is set to "Filter Contamination-Heavy", set Mode No. to "10", FIRST CODE NO. to "0", and SECOND CODE NO. to "02".

MODE NO.	FIRST CODE NO.	DESCRIPTION OF SETTING	SECOND CODE NO. NOTE)				
			01		02		03
10	0	Filter Contamination-Heavy/Light (Setting for spacing time of display time to clean air filter) (Setting for when filter contamination is heavy, and spacing time of display time to clean air filter is to be halved)	Light	Approx. 200 hrs.	Heavy	Approx. 100 hrs.	–
	3	Spacing time of display time to clean air filter count (Setting for when the filter sign is not to be displayed)	Display		Do not display		–
12 (*VRV* system)	1	ON/OFF input from outside (Set to enable starting/stopping from remote.)	Forced OFF input		ON/OFF		–
	2	Thermostat differential changeover (Set when using remote controller thermostat sensor.)	1°C		0.5°C		–
13	0	Airflow rate increase mode (to be set upon user's request)	Standard		A little increase		Increase

NOTE
- The SECOND CODE NO. is factory set to "01".

Do not use any settings not listed in the table.
For group control with a wireless remote controller, initial settings for all the indoor units of the group are equal. (For group control, refer to the installation manual attached to the indoor unit for group control.)

6. TEST OPERATION

- Perform test operation according to the instructions in the installation manual attached to the outdoor unit.

[PRECAUTIONS]
1. Refer to malfunction diagnosis label attached to the unit if it does not operate.
2. Refer to the installation manual attached to the outdoor unit for individual operation system types.

1.8 BRC7E530W / BRC7E531W (for FXZQ)

1.8.1 Features

1.8.2 Dimensions

Unit (mm)

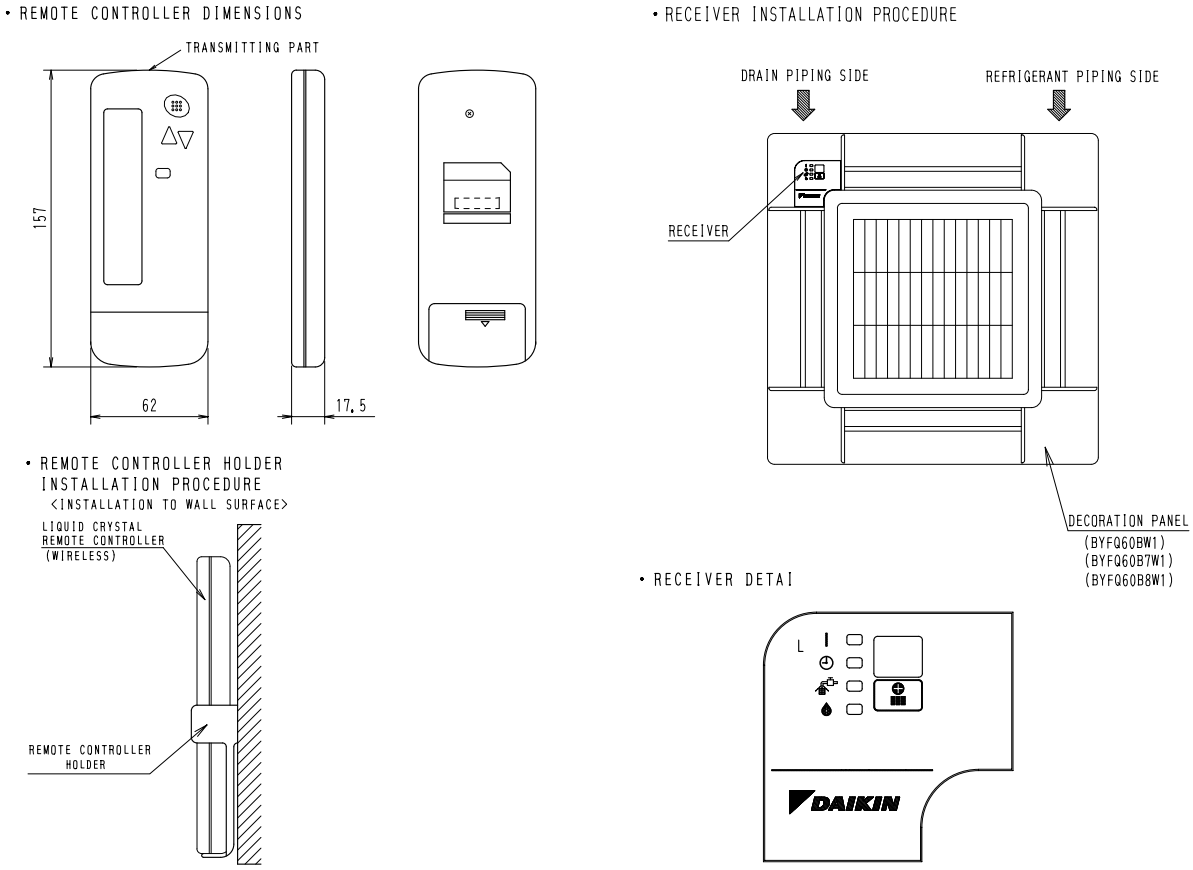

3D038937A

1.8.3 Operation Manual

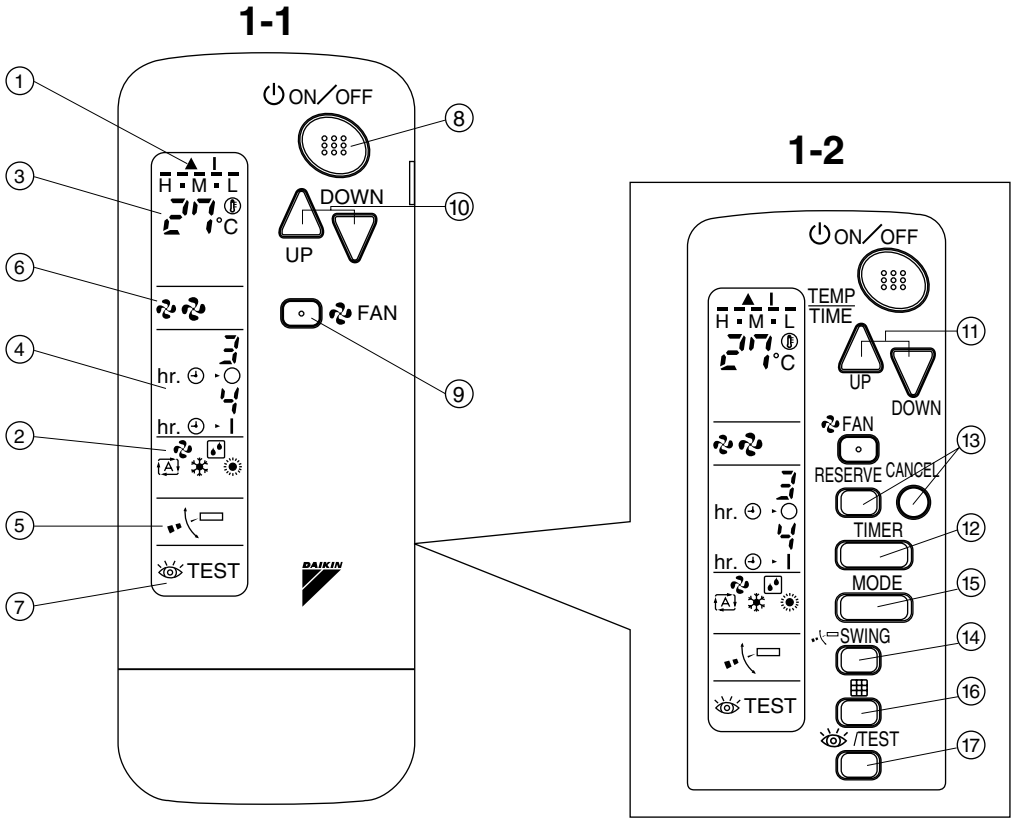

1

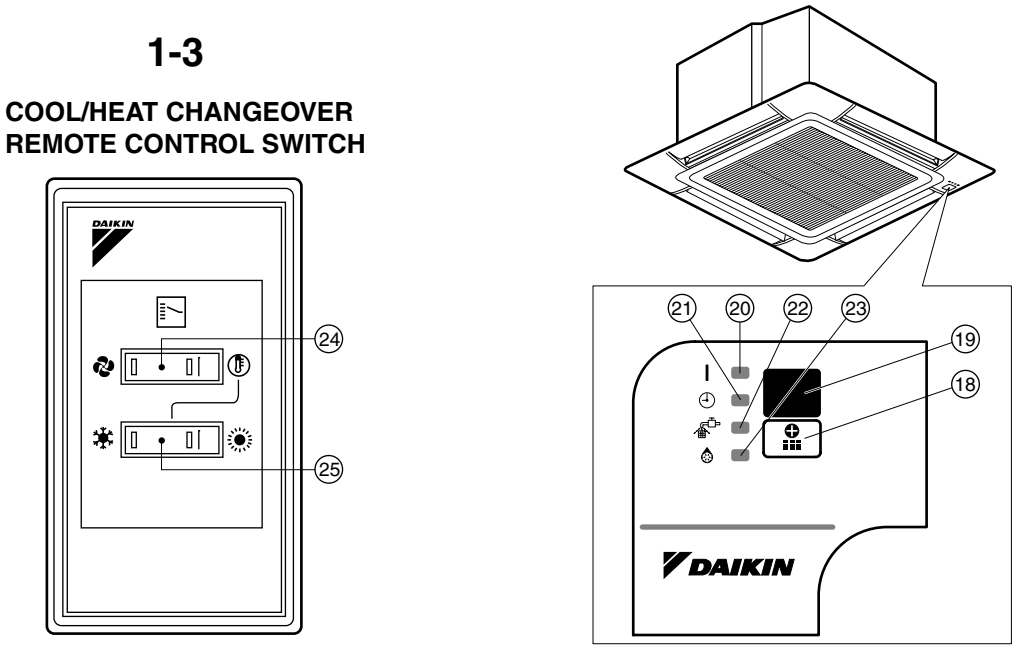

1 2

3P107422-1S

CONTENTS

ILLUSTRATION..... [1]
PRIOR TO USE ..... [2]

1 SAFETY PRECAUTIONS..... 1
2 NAMES AND FUNCTIONS OF THE OPERATING SECTION..... 4
3 HANDLING FOR WIRELESS REMOTE CONTROLLER..... 5
4 OPERATION RANGE..... 6
5 OPERATION PROCEDURE..... 7
6 NOT MALFUNCTION OF THE AIR CONDITIONER..... 12
7 HOW TO DIAGNOSE TROUBLE SPOTS..... 12

1. SAFETY PRECAUTIONS

To gain full advantage of the air conditioner's functions and to avoid malfunction due to mishandling, we recommend that you read this instruction manual carefully before use. This air conditioner is classified under "appliances not accessible to the general public".

The precautions described herein are classified as WARNING and CAUTION. They both contain important information regarding safety. Be sure to observe all precautions without fail.

⚠ **WARNING** ..... Failure to follow these instructions properly may result in personal injury or loss of life.

⚠ **CAUTION** ..... Failure to observe these instructions properly may result in property damage or personal injury, which may be serious depending on the circumstances.

After reading, keep this manual in a convenient place so that you can refer to it whenever necessary. If the equipment is transferred to a new user, be sure also to hand over the manual.

⚠ **WARNING**

Be aware that prolonged, direct exposure to cool or warm air from the air conditioner, or to air that is too cool or too warm can be harmful to your physical condition and health.

When the air conditioner is malfunctioning (giving off a burning odor, etc.) turn off power to the unit and contact your local dealer.
Continued operation under such circumstances may result in a failure, electric shocks or fire hazards.

Consult your local dealer to install your equipment.
Doing the work yourself may result in water leakage, electric shocks or fire hazards.

Consult your local dealer regarding modification, repair and maintenance of the air conditioner or the remote controller.
Improper workmanship may result in water leakage, electric shocks or fire hazards.

Do not place objects, including rods, your fingers, etc., in the air inlet or outlet.
Injury may result due to contact with the air conditioner's high-speed fan blades.

Beware of fire in case of refrigerant leakage.
If the air conditioner is not operating correctly, i.e. not generating cool or warm air, refrigerant leakage could be the cause. Consult your dealer for assistance.
The refrigerant within the air conditioner is safe and normally does not leak. However, in the event of a leakage, contact with a naked burner, heater or cooker may result in generation of noxious gas. Do not longer use the air conditioner until a qualified service person confirms that the leakage has been repaired.

3P107422-1S

Consult your local dealer regarding what to do in case of refrigerant leakage.
When the air conditioner is to be installed in a small room, it is necessary to take proper measures so that the amount of any leaked refrigerant does not exceed the concentration limit in the event of a leakage. Otherwise, this may lead to an accident due to oxygen depletion.

Contact professional personnel about attachment of accessories and be sure to use only accessories specified by the manufacturer.
If a defect results from your own workmanship, it may result in water leaks, electric shock or fire.

Consult your local dealer regarding relocation and reinstallation of the air conditioner.
Improper installation work may result in leakage, electric shocks or fire hazards.

Be sure to use fuses with the correct ampere reading.
Do not use improper fuses, copper or other wires as a substitute, as this may result in electric shock, fire, injury or damage to the unit.

Be sure to install an earth leakage breaker.
Failure to install an earth leakage breaker may result in electric shocks or fire.

Be sure to earth the unit.
Do not earth the unit to a utility pipe, lightning conductor or telephone earth lead. Imperfect earthing may result in electric shocks or fire.
A high surge current from lightning or other sources may cause damage to the air conditioner.

Consult the dealer if the air conditioner submerges owing to a natural disaster, such as a flood or typhoon.
Do not operate the air conditioner in that case, or otherwise a malfunction, electric shock, or fire may result.

Do not start or stop operating the air conditioner with the power supply breaker turned ON or OFF.
Otherwise, fire or water leakage may result. Furthermore, the fan will rotate abruptly if power failure compensation is enabled, which may result in injury.

Do not use the product in the atmosphere contaminated with oil vapor, such as cooking oil or machine oil vapor.
Oil vapor may cause crack damage, electric shocks, or fire.

Do not use the product in places with excessive oily smoke, such as cooking rooms, or in places with flammable gas, corrosive gas, or metal dust.
Using the product in such places may cause fire or product failures.

Do not use flammable materials (e.g., hairspray or insecticide) near the product.
Do not clean the product with organic solvents such as paint thinner.
The use of organic solvents may cause crack damage to the product, electric shocks, or fire.

Be sure to use a dedicated power supply for the air conditioner.
The use of any other power supply may cause heat generation, fire, or product failures.

⚠ **CAUTION**

Do not use the air conditioner for purposes other than those for which it is intended.
Do not use the air conditioner for cooling precision instruments, food, plants, animals or works of art as this may adversely affect the performance, quality and/or longevity of the object concerned.

Do not remove the outdoor unit's fan guard.
The guard protects against the unit's high speed fan, which may cause injury.

Do not place objects that are susceptible to moisture directly beneath the indoor or outdoor units.
Under certain conditions, condensation on the main unit or refrigerant pipes, air filter dirt or drain blockage may cause dripping, resulting in fouling or failure of the object concerned.

To avoid oxygen depletion, ensure that the room is adequately ventilated if equipment such as a burner is used together with the air conditioner.

After prolonged use, check the unit stand and its mounts for damage.
If left in a damaged condition, the unit may fall and cause injury.

Do not place flammable sprays or operate spray containers near the unit as this may result in fire.

Before cleaning, be sure to stop unit operation, turn the breaker off or remove the power cord.
Otherwise, an electric shock and injury may result.

To avoid electric shocks, do not operate with wet hands.

Do not place appliances that produce naked flames in places exposed to the air flow from the unit as this may impair combustion of the burner.

Do not place heaters directly below the unit, as resulting heat can cause deformation.

Do not allow a child to mount on the outdoor unit or avoid placing any object on it.
Falling or tumbling may result in injury.

Do not block air inlets nor outlets.
Impaired air flow may result in insufficient performance or trouble.

Be sure that children, plants or animals are not exposed directly to airflow from the unit, as adverse effects may ensue.

Do not wash the air conditioner or the remote controller with water, as this may result in electric shocks or fire.

Do not place water containers (flower vases, etc.) on the unit, as this may result in electric shocks or fire.

Do not install the air conditioner at any place where there is a danger of flammable gas leakage.
In the event of a gas leakage, build-up of gas near the air conditioner may result in fire hazards.

Do not put flammable containers, such as spray cans, within 1 m from the blow-off mouth.
The containers may explode because the warm air output of the indoor or outdoor unit will affect them.

The batteries must be removed from the appliance before it is scrapped and they are disposed of safely.

Arrange the drain to ensure complete drainage.
If proper drainage from the outdoor drain pipe does not occur during air conditioner operation, there could be a blockage due to dirt and debris build-up in the pipe. This may result in a water leakage from the indoor unit. Under these circumstances, stop air conditioner operation and consult your dealer for assistance.

The appliance is not intended for use by unattended young children or infirm persons.
Impairment of bodily functions and harm to health may result.

Children should be supervised to ensure that they do not play with the unit or its remote controller.
Accidental operation by a child may result in impairment of bodily functions and harm health.

Do not let children play on or around the outdoor unit.
If they touch the unit carelessly, injury may be caused.

Consult your dealer regarding cleaning the inside of the air conditioner.
Improper cleaning may cause breakage of plastic parts, water leakage and other damage as well as electric shocks.

To avoid injury, do not touch the air inlet or aluminum fins of the unit.

Do not place objects in direct proximity of the outdoor unit and do not let leaves and other debris accumulate around the unit.
Leaves are a hotbed for small animals which can enter the unit. Once in the unit, such animals can cause malfunctions, smoke or fire when making contact with electrical parts.

Never touch the internal parts of the controller.
Do not remove the front panel. Touching certain internal parts will cause electric shocks and damage to the unit. Please consult your dealer about checking and adjustment of internal parts.

Do not leave the remote controller wherever there is a risk of wetting.
If water gets into the remote controller there is a risk of electrical leakage and damage to electronic components.

When using the wireless remote controller, do not put a strong light beam or install an inverter fluorescent lamp near the receiving section on the main unit.
A malfunction may occur.

Watch your steps at the time of air filter cleaning or inspection.
High-place work is required, to which utmost attention must be paid.
If the scaffold is unstable, you may fall or topple down, thus causing injury.

2. NAMES AND FUNCTIONS OF THE OPERATING SECTION (Fig. 1, 2)

1	**DISPLAY " ▲ " (SIGNAL TRANSMISSION)**
	This lights up when a signal is being transmitted.
2	**DISPLAY " " " " " A " " " " " (OPERATION MODE)**
	This display shows the current OPERATION MODE. For cooling only type, " A " (Auto) and " " (Heating) are not installed.
3	**DISPLAY " H M L 70 °C " (SET TEMPERATURE)**
	This display shows the set temperature.
4	**DISPLAY " hr. 3 0 hr. 4 1 " (PROGRAMMED TIME)**
	This display shows PROGRAMMED TIME of the system start or stop.
5	**DISPLAY " " (AIR FLOW FLAP)**
	Refer to page 9.
6	**DISPLAY " " " " (FAN SPEED)**
	The display shows the set fan speed.
7	**DISPLAY " TEST " (INSPECTION/ TEST OPERATION)**
	When the INSPECTION/TEST OPERATION BUTTON is pressed, the display shows the system mode is in.
8	**ON/OFF BUTTON**
	Press the button and the system will start. Press the button again and the system will stop.
9	**FAN SPEED CONTROL BUTTON**
	Press this button to select the fan speed, HIGH or LOW, of your choice.
10	**TEMPERATURE SETTING BUTTON**
	Use this button for SETTING TEMPERATURE (Operates with the front cover of the remote controller closed.)
11	**PROGRAMMING TIMER BUTTON**
	Use this button for programming "START and/or STOP" time. (Operates with the front cover of the remote controller opened.)
12	**TIMER MODE START/STOP BUTTON**
	Refer to page 10.
13	**TIMER RESERVE/CANCEL BUTTON**
	Refer to page 10.
14	**AIR FLOW DIRECTION ADJUST BUTTON**
	Refer to page 9.
15	**OPERATION MODE SELECTOR BUTTON**
	Press this button to select OPERATION MODE.
16	**FILTER SIGN RESET BUTTON**
	Refer to the section of MAINTENANCE in the operation manual attached to the indoor unit.
17	**INSPECTION/TEST OPERATION BUTTON**
	This button is used only by qualified service persons for maintenance purposes.
18	**EMERGENCY OPERATION SWITCH**
	This switch is readily used if the remote controller does not work.

19	**RECEIVER**
	This receives the signals from the remote controller.
20	**OPERATING INDICATOR LAMP (Red)**
	This lamp stays lit while the air conditioner runs. It flashes when the unit is in trouble.
21	**TIMER INDICATOR LAMP (Green)**
	This lamp stays lit while the timer is set.
22	**AIR FILTER CLEANING TIME INDICATOR LAMP (Red)**
	Lights up when it is time to clean the air filter.
23	**DEFROST LAMP (Orange)**
	Lights up when the defrosting operation has started. (For cooling only type this lamp does not turn on.)
24	**FAN/AIR CONDITIONING SELECTOR SWITCH**
	Set the switch to " " (FAN) for FAN and " " (A/C) for HEAT or COOL.
25	**COOL/HEAT CHANGEOVER SWITCH**
	Set the switch to " " (COOL) for COOL and " " (HEAT) for HEAT.

NOTES

- For the sake of explanation, all indications are shown on the display in Figure 1 contrary to actual running situations.
- Fig. 1-2 shows the remote controller with the front cover opened.
- If the air filter cleaning time indicator lamp lights up, clean the air filter as explained in the operation manual provided with the indoor unit.
  After cleaning and reinstalling the air filter, press the filter sign reset button on the remote controller. The air filter cleaning time indicator lamp on the receiver will go out.
- The Defrost Lamp will flash when the power is turned on. This is not a malfunction.

3. HANDLING FOR WIRELESS REMOTE CONTROLLER

Precautions in handling remote controller
Direct the transmitting part of the remote controller to the receiving part of the air conditioner.
If something blocks the transmitting and receiving path of the indoor unit and the remote controller as curtains, it will not operate.

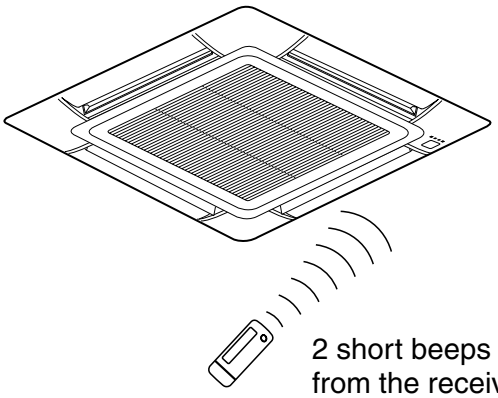

2 short beeps from the receiver indicates that the transmission is properly done.

Transmitting distance is approximately 7 m.

Do not drop or get it wet.
It may be damaged.

Never press the button of the remote controller with a hard, pointed object.
The remote controller may be damaged.

Installation site

- It is possible that signals will not be received in rooms that have electronic fluorescent lighting. Please consult with the salesman before buying new fluorescent lights.
- If the remote controller operated some other electrical apparatus, move that machine away or consult your dealer.

Placing the remote controller in the remote controller holder

Install the remote controller holder to a wall or a pillar with the attached screw. (Make sure it transmits)

Placing the remote controller	Removing the remote controller
Slide from above	Pull it upward

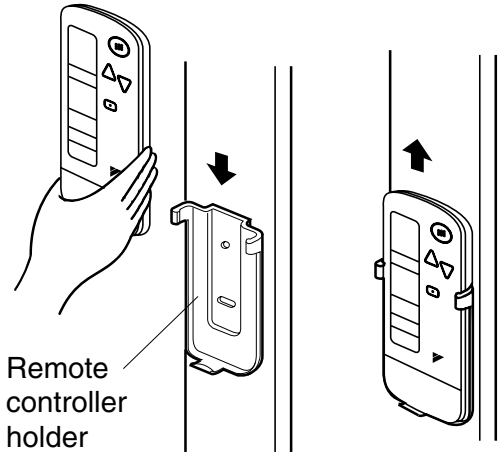

How to put the dry batteries

(1) Remove the back cover of the remote controller to the direction pointed by the arrow mark.

(2) Put the batteries
Use two dry cell batteries (AAA.LR03 (alkaline)). Put dry batteries correctly to fit their (+) and (–).

(3) Close the cover

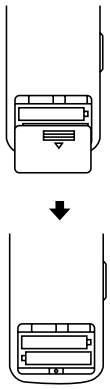

— When to change batteries

Under normal use, batteries last about a year. However, change them whenever the indoor unit doesn't respond or responds slowly to commands, or if the display becomes dark.

[CAUTIONS]

- Replace all batteries at the same time, do not use new and old batteries intermixed.
- In case the remote controller is not used for a long time take out all batteries in order to prevent liquid leak of the battery.

IN THE CASE OF CENTRALIZED CONTROL SYSTEM

If the indoor unit is under centralized control, it is necessary to switch the remote controller's setting.
In this case, contact your DAIKIN dealer.

4. OPERATION RANGE

SKYAIR System

If the temperature or the humidity is beyond the following conditions, safety devices may work and the air conditioner may not operate, or sometimes, water may drop from the indoor unit.

COOLING [°C]

OUTDOOR UNIT	INDOOR TEMPERATURE		INDOOR HUMIDITY	OUTDOOR TEMPERATURE	
RS50 · 60 RKS25 · 35 · 50 · 60 RXS25 · 35 · 50 · 60	DB	21 to 32	80% or below	DB	– 10 to 46
	WB	14 to 23			
3MKS50 4MKS58 · 75 · 90 3MXS52 4MXS68 · 80	DB	21 to 32	80% or below	DB	– 10 to 46
	WB	14 to 23			

HEATING [°C]

OUTDOOR UNIT	INDOOR TEMPERATURE		OUTDOOR TEMPERATURE	
RXS25 · 35 · 50 · 60	DB	10 to 30	DB	– 14 to 24
			WB	– 15 to 18
3MXS52 4MXS68 · 80	DB	10 to 30	DB	– 14 to 21
			WB	– 15 to 15.5

DB: Dry bulb temperature
WB: Wet bulb temperature

The setting temperature range of the remote controller is 16°C to 32°C.

***VRV* System**
See the operation manual provided with the air conditioner.

5. OPERATION PROCEDURE

Refer to figure 1 on page [1]

- Operating procedure varies with heat pump type and cooling only type. Contact your Daikin dealer to confirm your system type.
- To protect the unit, turn on the main power switch 6 hours before operation.
- If the main power supply is turned off during operation, operation will restart automatically after the power turns back on again.

COOLING, HEATING, AUTOMATIC, FAN, AND PROGRAM DRY OPERATION

Operate in the following order.

- AUTOMATIC OPERATION can be selected only by Heat pump split system.
- For cooling only type, “COOLING”, and “FAN” and “DRY”operation are able to select.

《FOR SYSTEMS WITHOUT COOL/HEAT CHANGEOVER REMOTE CONTROL SWITCH》

Refer to figure 1-1, 2 on page [1]

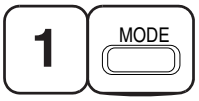

OPERATION MODE SELECTOR

Press OPERATION MODE SELECTOR button several times and select the OPERATION MODE of your choice as follows.

- COOLING OPERATION ..... “ ❄ ”
- HEATING OPERATION ..... “ ☀ ”
- AUTOMATIC OPERATION..... “ A ”
  - In this operation mode, COOL/HEAT changeover is automatically conducted.
- FAN OPERATION ..... “ ”
- DRY OPERATION..... “ ”
  - The function of this program is to decrease the humidity in your room with the minimum temperature decrease.
  - Micro computer automatically determines TEMPERATURE and FAN SPEED.
  - This system does not go into operation if the room temperature is below 16˚C.

ON/OFF

Press ON/OFF button
OPERATION lamp lights up or goes off and the system starts or stops OPERATION.

NOTE
- Do not turn OFF power immediately after the unit stops. Then, wait no less than 5 minutes.
  Water is leaking or there is something else wrong with the unit.

《FOR SYSTEMS WITH COOL/HEAT CHANGEOVER REMOTE CONTROL SWITCH》

Refer to figure 1-1,3 on page [1]

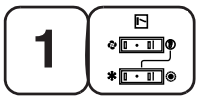

OPERATION MODE SELECTOR

(1) Select OPERATION MODE with the COOL/HEAT CHANGEOVER REMOTE CONTROL SWITCH as follows.

- COOLING OPERATION ..... “ ”
- HEATING OPERATION ..... “ ”

■ FAN OPERATION ..... “ ”

■ DRY OPERATION ..... “ ”

- See “FOR SYSTEMS WITHOUT COOL/ HEAT CHANGEOVER REMOTE CONTROL SWITCH” for details on dry operation.

(2) Press OPERATION MODE SELECTOR button several times and select “ ” (This operation is only available during dry operation.)

ON/OFF

Press ON/OFF button

OPERATION lamp lights up or goes off and the system starts or stops OPERATION.

NOTE

- Do not turn OFF power immediately after the unit stops. Then, wait no less than 5 minutes.
  Water is leaking or there is something else wrong with the unit.

[EXPLANATION OF HEATING OPERATION]
DEFROST OPERATION

- As the frost on the coil of an outdoor unit increase, heating effect decreases and the system goes into DEFROST OPERATION.
- The fan operation stops and the DEFROST lamp of the indoor unit goes on. After 6 to 8 minutes (maximum 10 minutes) of DEFROST OPERATION, the system returns to HEATING OPERATION.

Heating capacity & Outdoor air temperature

- Heating capacity drops as outdoor air temperature lowers. If feeling cold, use another heater at the same time as this air conditioner.
- Hot air is circulated to warm the room. It will take some time from when the air conditioner is first started until the entire room becomes warm. The internal fan automatically turns at low speed until the air conditioner reaches a certain temperature on the inside. In this situation, all you can do is wait.
- If hot air accumulates on the ceiling and feet are left feeling cold, it is recommended to use a circulator. For details, contact the place of purchase.

ADJUSTMENT

For programming TEMPERATURE, FAN SPEED and AIR FLOW DIRECTION, follow the procedure shown below.

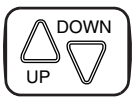

TEMPERATURE SETTING

Press TEMPERATURE SETTING button and program the setting temperature.

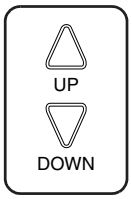

Each time this button is pressed, setting temperature rises 1°C.

Each time this button is pressed, setting temperature lowers 1°C.

In case of automatic operation

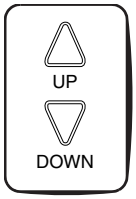

Each time this button is pressed, setting temperature shifts to “H” side.

Each time this button is pressed, setting temperature shifts to “L” side.

[°C]

	H	•	M	•	L
Setting temperature	25	23	22	21	19

- The setting is impossible for fan operation.

NOTE

- The setting temperature range of the remote controller is 16˚C to 32˚C.

FAN SPEED CONTROL

Press FAN SPEED CONTROL button.
High or Low fan speed can be selected.
The micro computer may sometimes control the fan speed in order to protect the unit.

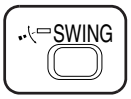

AIR FLOW DIRECTION ADJUST

UP AND DOWN DIRECTION

- The movable limit of the flap is changeable. Contact your Daikin dealer for details.

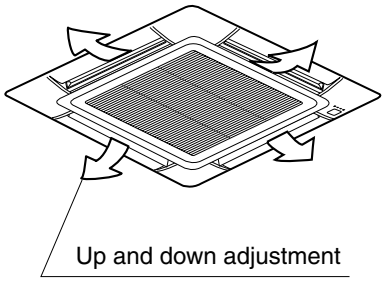

Press the AIR FLOW DIRECTION ADJUST button to select the air direction as shown below.

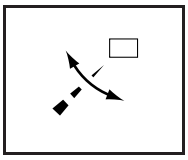

DISPLAY appears and the air flow direction continuously varies. (Automatic swing setting)

Press AIR FLOW DIRECTION ADJUST button to select the air direction of your choice.

DISPLAY vanishes the air flow direction is fixed (Fixed air flow direction setting).

MOVEMENT OF THE AIR FLOW FLAP

For the following conditions, micro computer controls the air flow direction so it may be different from the display.

Operation mode	Heating
Operation conditions	• When starting operation • When room temperature is higher than the set temperature • At defrost operation (The flaps blow horizontally to avoid blowing cold air directly on the occupants of the room.)

NOTES

- If you try cooling or programmed drying, while the flaps are facing downward, air flow direction may change unexpectedly. There is nothing wrong with the equipment. This serves to prevent dew formed on parts in the air discharge outlet from dripping.
- Operation mode includes automatic operation.

PROGRAM TIMER OPERATION

Operate in the following order.

- The timer is operated in the following two ways.
  Programming the stop time (◷ ▸ ○)
  .... The system stops
  operating after the set time has elapsed.
  Programming the start time (◷ ▸ |)
  .... The system starts
  operating after the set time has elapsed.
- The timer can be programmed a maximum of 72 hours.
- The start and the stop time can be simultaneously programmed.

1 TIMER MODE START/ STOP

Press the TIMER MODE START/STOP button several times and select the mode on the display.

The display flashes.

For setting the timer stop .... "◷ ▸ ◯"

For setting the timer start .... "◷ ▸ |"

2 PROGRAMMING TIME

Press the PROGRAMMING TIME button and set the time for stopping or starting the system.

UP — When this button is pressed, the time advances by 1 hour.

DOWN — When this button is pressed, the time goes backward by 1 hour.

3 TIMER RESERVE

Press the TIMER RESERVE button.

The timer setting procedure ends.
The display or changes from flashing light to a constant light.

4 TIMER CANCEL

Press the TIMER OFF button to cancel programming. The display vanishes.

For example.

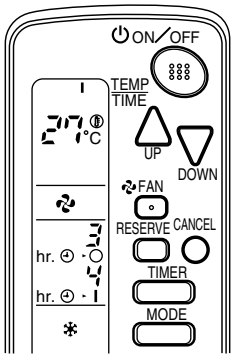

When the timer is programmed to stop the system after 3 hours and start the system after 4 hours, the system will stop after 3 hours and then 1 hour later the system will start.

NOTES

- When the timer is programmed to stop the system after 3 hours and start the system after 4 hours, the system will stop after 3 hours and then 1 hour later the system will start.
- After the timer is programmed, the display shows the remaining time.

HOW TO SET MASTER REMOTE CONTROLLER (For *VRV* system)

- When the system is installed as shown below, it is necessary to designate the master remote controller.

■ For Heat pump system

When one outdoor unit is connected with several indoor units.

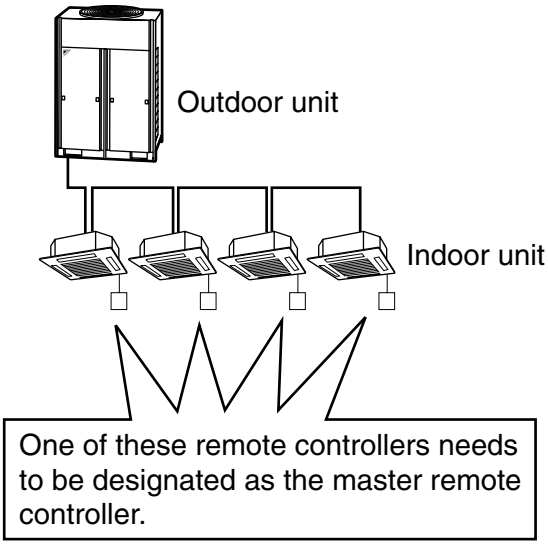

■ **For Heat recovery system**

When one BS unit is connected with several indoor units.

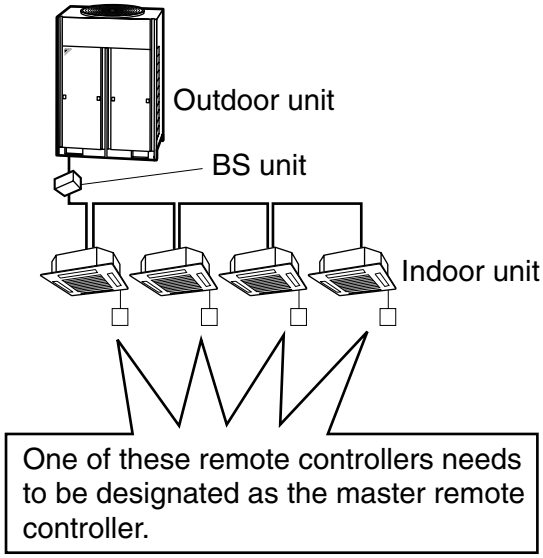

- Only the master remote controller can select HEATING, COOLING or AUTOMATIC (only Heat recovery system) OPERATION.

When the indoor unit with master remote controller is set to “COOL”, you can switch over operation mode between “FAN”, “DRY” and “COOL”.

When the indoor unit with master remote controller is set to “HEAT”, you can switch over operation mode between “FAN” and “HEAT”.

When the indoor unit with master remote controller is set to “FAN”, you cannot switch operation mode.

When attempting settings than that consented above, a “peep” is emitted as a warning.

Only with Heat recovery system, you can set the indoor unit to AUTOMATIC. Attempting to do so, a “peep” will be emitted as a warning.

How to designate the master remote controller

Operate in the following order.

Continuously press the OPERATION MODE SELECTOR button for 4 seconds.

The displays showing “ ◷ ” of all slave indoor unit connected to the same outdoor unit or BS unit flash.

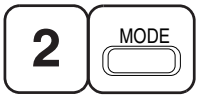

Press the OPERATION MODE SELECTOR button to the indoor unit that you wish to designate as the master remote controller. Then designation is completed. This indoor unit is designated as the master remote controller and the display showing “ ◷ ” vanishes.

- To change settings, repeat steps 1 and 2.

EMERGENCY OPERATION

When the remote controller does not work due to battery failure or the absence thereof, use this switch which is located beside the discharge grille on the main unit. When the remote controller does not work, but the battery low indicator on it is not lit, contact your dealer.

[START]

To press the emergency operation switch.

The machine runs in the previous mode. The system operates with the previously set air flow direction.

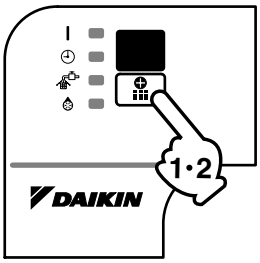

[STOP]

2 **Press the EMERGENCY OPERATION switch again.**

PRECAUTIONS FOR GROUP CONTROL SYSTEM OR TWO REMOTE CONTROLLER CONTROL SYSTEM

This system provides two other control systems beside individual control (one remote controller controls one indoor unit) system. Confirm the following if your unit is of the following control system type.

■ **Group control system**
One remote controller controls up to 16 indoor units.
All indoor units are equally set.

■ **Two remote controller control system**
Two remote controllers control one indoor unit. (In case of group control system, one group of indoor units)
The unit follows individual operation.

NOTES

- Cannot have two remote controller control system with only wireless remote controllers. (It will be a two remote controller control system having one wired and one wireless remote controllers.)
- Under two remote controller control system, wireless remote controller cannot control timer operation.
- Only the operating indicator lamp out of 3 other lamps on the indoor unit display functions.

NOTE

- Contact your Daikin dealer in case of changing the combination or setting of group control and two remote controller control systems.

6. NOT MALFUNCTION OF THE AIR CONDITIONER

The following symptoms do not indicate air conditioner malfunction

I. THE SYSTEM DOES NOT OPERATE

- **The system does not restart immediately after the ON/OFF button is pressed.**
  If the OPERATION lamp lights, the system is in normal condition. It does not restart immediately because a safety device operates to prevent overload of the system. After 3 minutes, the system will turn on again automatically.
- **The system does not restart immediately when TEMPERATURE SETTING button is returned to the former position after pushing the button.**
  It does not restart immediately because a safety device operates to prevent overload of the system. After 3 minutes, the system will turn on again automatically.
- **If the reception beep is rapidly repeated 3 times (It sounds only twice when operating normally.)**
  Control is set to the optional controller for centralized control.
- **If the defrost lamp on the indoor unit's display is lit when heating is started.**
  This indication is to warn against cold air being blown from the unit. There is nothing wrong with the equipment.

7. HOW TO DIAGNOSE TROUBLE SPOTS

I. EMERGENCY STOP

When the air conditioner stops in emergency, the run lamp on the indoor unit starts blinking. Take the following steps yourself to read the malfunction code that appears on the display. Contact your dealer with this code. It will help pinpoint the cause of the trouble, speeding up the repair.

Press the INSPECTION/TEST button to select the inspection mode “ 0 ”.

“ 0 ” appears on display and blinks. “UNIT” lights up.

Press PROGRAMMING TIMER BUTTON and change the unit number.

Press to change the unit number until the indoor unit beeps and perform the following operation according to the number of beeps.

Number of beeps

3 short beeps .... Perform all steps from 3 to 6.

1 short beep ..... Perform 3 and 6 steps.

1 long beep..... Normal state

Press OPERATION MODE SELECTOR BUTTON

“ 0 ” on the left-hand of the malfunction code blinks.

Press PROGRAMMING TIMER BUTTON and change the malfunction code.

Press until the indoor unit beeps twice.

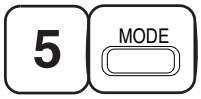

Press OPERATION MODE SELECTOR BUTTON

“ 0 ” on the right-hand of the malfunction code blinks.

Press PROGRAMMING TIMER BUTTON and change the malfunction code.

Press until the indoor unit makes a long beep.
The malfunction code is fixed when the indoor unit makes a long beep.

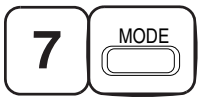

Reset of the display

Press OPERATION MODE SELECTOR BUTTON to get the display back to the normal state.

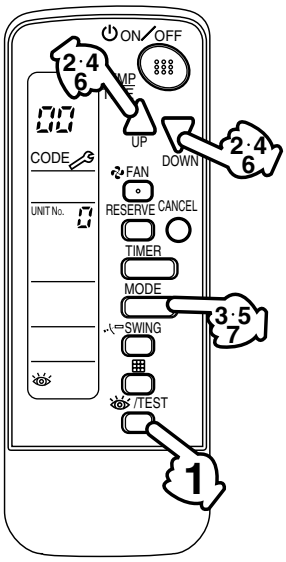

3P107422-1S

II. IN CASE BESIDES EMERGENCY STOP

1. The unit does not operate at all.

- Check if the receiver is exposed of sunlight or strong light. Keep receiver away from light.
- Check if there are batteries in the remote controller. Place the batteries.
- Check if the indoor unit number and wireless remote controller number are equal.

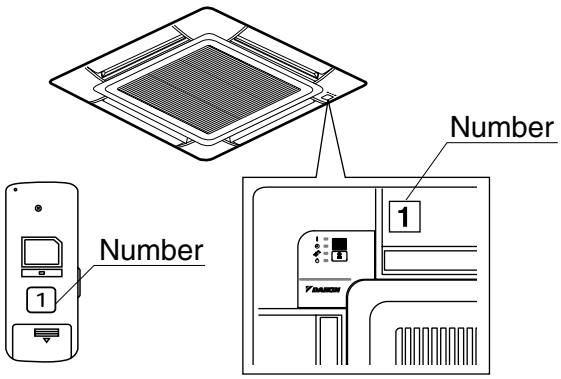

Operate the indoor unit with the remote controller of the same number.
Signal transmitted from a remote controller of a different number cannot be accepted. (If the number is not mentioned, it is considered as “1”)

2. The system operates but it does not sufficiently cool or heat.

- If the set temperature is not proper.
- If the FAN SPEED is set to LOW SPEED.
- If the air flow angle is not proper.

Contact the place of purchase in the following case.

⚠ WARNING

When you detect a burning odor, shut OFF power immediately and contact the place of purchase. Using the equipment in anything but proper working condition can result in equipment damage, electric shock and/or fire.

[Trouble]

The RUN lamp of the indoor unit is flashing and the unit does not work at all.

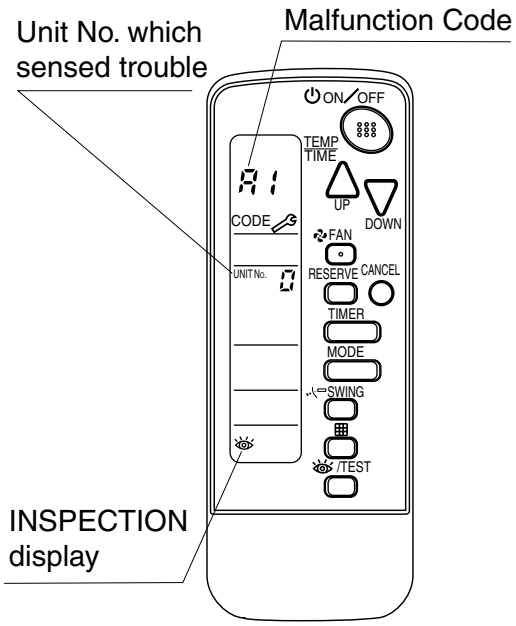

[Remedial action]

Check the malfunction code (A1 - UF) on the remote controller.
Notify and inform the model name and what the malfunction code indicates to your Daikin dealer.

1.8.4 Installation Manual

DAIKIN

BRC7E530W BRC7EA530W BRC7E531W BRC7EA531W	Wireless Remote Controller Kit	Installation manual

CONTENTS

1. SAFETY CONSIDERATIONS 1
2. BEFORE INSTALLATION 2
3. REMOTE CONTROLLER INSTALLATION 2
4. RECEIVER INSTALLATION 3
5. FIELD SETTING 6
6. TEST OPERATION 8

1. SAFETY CONSIDERATIONS

Please read this “SAFETY CONSIDERATIONS” carefully before installing air conditioning equipment and be sure to install it correctly. After completing the installation, make sure at start up operation that the unit operates properly. Please instruct the customer how to operate the unit and keep maintenance.

Meaning of caution symbols

CAUTION ..... If the caution is not observed, it may cause injury or damage to equipment.

NOTE ..... These instructions will ensure proper use of the equipment.

CAUTION

- Refer also to the installation manual attached to the indoor unit and the installation manual attached to the decoration panel.
- Confirm that following conditions are satisfied prior to installation.
  - Ensure that nothing interrupts the operation of the wireless remote controller. (Ensure that there is neither a source of light nor fluorescent lamp near the receiver. Also, ensure that the receiver is not exposed of direct sunlight.)
  - Ensure that the operation display lamp and other indicators are easy to see.
- The installation position of this kit is 1 position of the decoration panel. Therefore, confirm that its position is set so that the single form the wireless remote controller can be easily transmitted and its display can be easily seen.

3P107423-1B

2. BEFORE INSTALLATION

2-1 ACCESSORIES

Check if the following accessories are included with your unit.

Name	Receiver	Transmitter board	Tapping screw for transmitter board	Wireless remote controller	Remote controller holder
Quantity	1 set.	1 pc.	2 pcs.	1 pc.	1 pc.
Shape	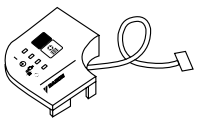	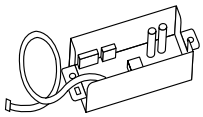		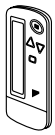	

Name	Dry cell battery LR03 (AM4)	Unit No. label	Screw for installing remote controller holder	Operation manual	Clamp
Quantity	2 pcs.	1 pc.	2 pcs.	1 pc.	1 pc.
Shape	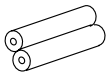				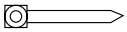

2-2 NOTE TO THE INSTALLER

- Be sure to instruct the customer how to properly operate the system showing him/her the attached operation manual.

3. REMOTE CONTROLLER INSTALLATION

〈**Installing wireless remote controller**〉

- Do not throw the remote controller or impose large shocks. Also, do not store where it may be exposed to moisture or direct sunlight.
- When operating, point the transmitting part of the remote controller in the direction of the receiver.
- The direct transmitting distance of the remote controller is approximately 7 meters.
- The signal cannot be transmitted if something such as curtains blocks the receiver and the remote controller.

- **Installing to a wall or a pillar**
  (1) Fix the remote controller holder with the screws.

  (2) Slide the remote controller into the remote controller holder from the top.

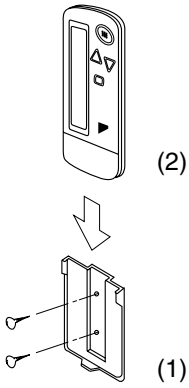

3P107423-1B

- **How to insert the batteries**
  1. Open the back cover of the remote controller by sliding it in the direction of the arrow.

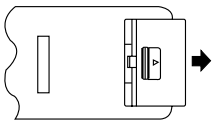

  2. Insert the attached dry cell batteries. Properly insert, set the batteries by matching the (+) and (–) polarity marks as indicated. Then close the cover as before.

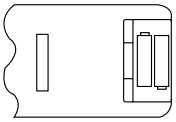

4. RECEIVER INSTALLATION

(1) Preparations before installation

1. Detach the brand name plate part of the decoration corner panel piece, before attaching the decoration panel. This part is not needed hereafter.
2. Next, remove the suction grille and the air filter according to the instructions in the installation manual attached to the decoration panel.
3. Remove the control box lid according to the instructions in the installation manual attached to the indoor unit. (Be sure to turn off power, before removing the control box lid.)

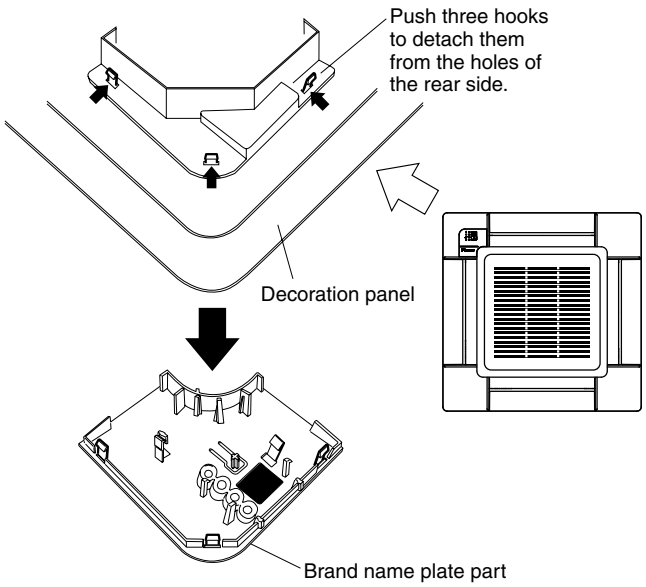

(2) Determination of address and MAIN/SUB remote controller.

If setting multiple wireless remote controllers to operate in one room, perform address setting for the receiver and the wireless remote controller.
If setting multiple wired remote controllers in one room, change the MAIN/SUB switch of the receiver.

SETTING PROCEDURE

1. **Setting the receiver**

Set the wireless address switch (SS2) on the transmitter board according to the table below.

Unit No.	No. 1	No. 2	No. 3
Wireless address switch (SS2)	1 2 3	1 2 3	1 2 3

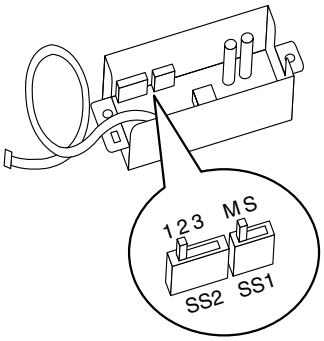

When using both a wired and a wireless remote controller for 1 indoor unit, the wired controller should be set to MAIN. Therefore, set the MAIN/SUB switch (SS1) of the transmitter board to SUB.

	MAIN	SUB
MAIN/SUB switch (SS1)	S M	S M

3P107423-1B

2. Setting the address of wireless remote controller (It is factory set to " 1 ")
"Setting from the remote controller"

1. Hold down the [⊞] button and the [/TEST] button for at least 4 seconds to get the Field Set mode.
   (Indicated in the display area in the figure at right.)
2. Press the [FAN] button and select a multiple setting (A/b). Each time the button is pressed the display switches between "A" and "b".
3. Press the " △ UP " button and " ▽ DOWN " button to set the address.

   →1→2→3→4→5→6

   Address can be set from 1 to 6, but set it to 1 ~ 3 and to same address as the receiver. (The receiver does not work with address 4 ~ 6.)
4. Press the [RESERVE] button to enter the setting.
5. Hold down the [/TEST] button for at least 1 second to quit the Field Set mode and return to the normal display.

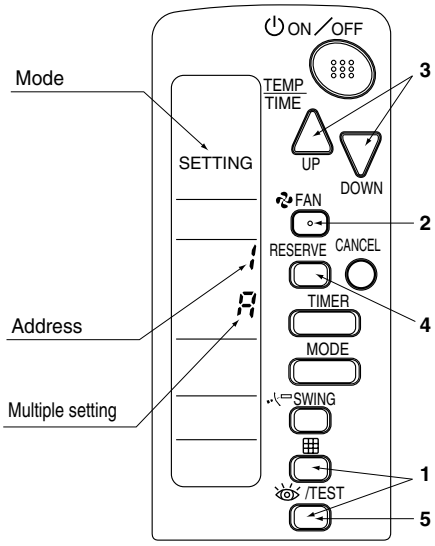

Multiple settings A/b

When the indoor unit is being operating by outside control (central remote controller, etc.), it sometimes does not respond to ON/OFF and temperature setting commands from this remote controller. Check what setting the customer wants and make the multiple setting as shown below.

Remote controller		Movement when the operation is controlled by the other air conditioners and equipment
Multiple setting	Remote controller display	
A: Standard	All items displayed.	When operation changeover, temperature setting or the like is carried out from the remote controller, the indoor unit rejects the instruction. (Signal receiving sound "peeh" or "pick-pick-pick") As a result, a discrepancy between the operation state of the indoor unit and the indication of the remote controller display occurs.
b: Multi System	Operations remain displayed shortly after execution.	Since the indication of the remote controller is turned off, no discrepancy such as mentioned above occurs.

3. Stick the Unit No. label on the air outlet of the decoration panel and the back of the wireless remote controller.

[PRECAUTIONS]
Set the Unit No. of the receiver and the wireless remote controller to be equal. If the settings differ, the signal from the remote controller cannot be transmitted.

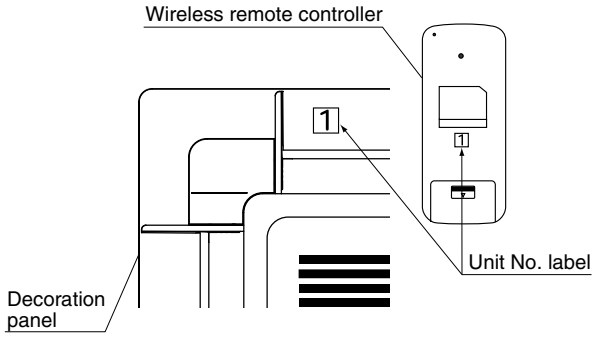

(3) Receiver installation

1. As shown at right, pass the harness from the receiver through the wiring hole of the decoration panel. Then, attach the receiver to the decoration panel.

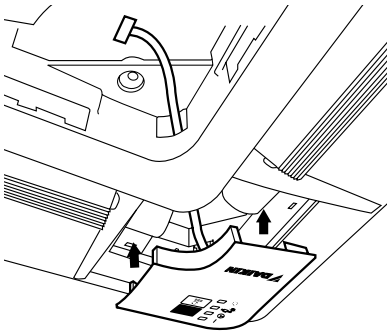

2. Hook the harness from the receiver on the upper part of the panel temporary suspension of the decoration panel.
   Be sure to push the harness to the groove.

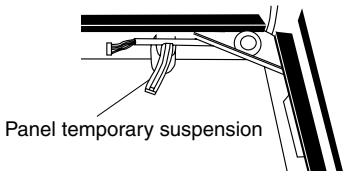

3. Attach the decoration panel to the indoor unit.
   (Refer to the installation manual attached to the decoration panel.)

4. Connect the harness from the receiver to the connector X1A on the transmitter board.

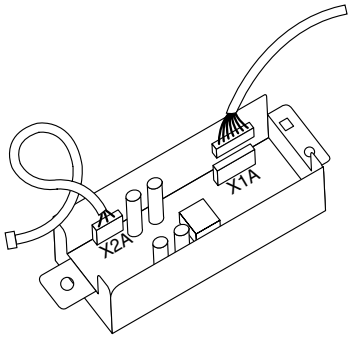

After connecting, use the attached clamp to fix the two harnesses to the transmitter board box.

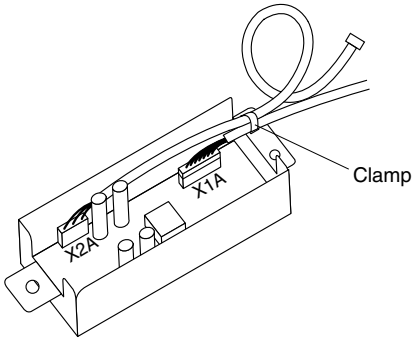

5. Use two tapping screws to attach the transmitter board to the indoor unit, as shown in the figure.

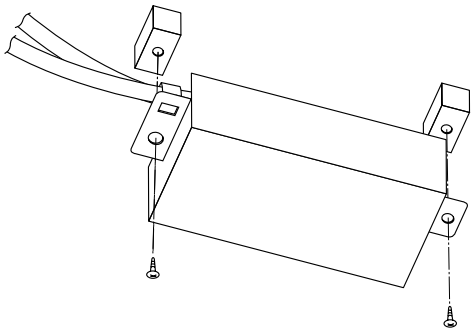

6. Connect the harness from the transmitter board to the connector X24 on the indoor unit PC board.

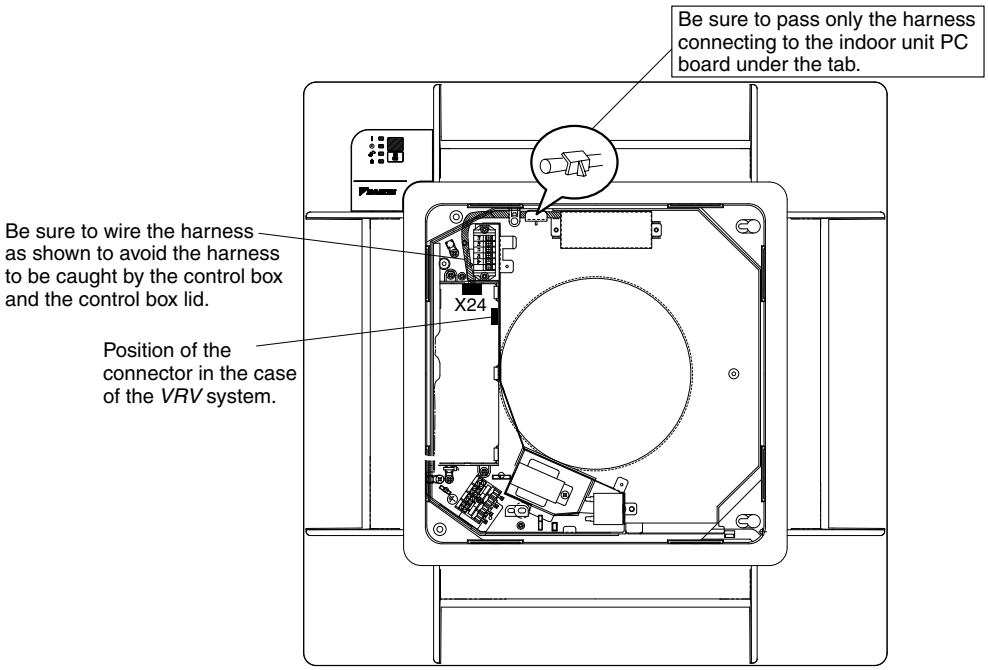

5. FIELD SETTING

If optional accessories are mounted on the indoor unit, the indoor unit setting may have to be changed. Refer to the instruction manual (optional hand book) for each optional accessory.

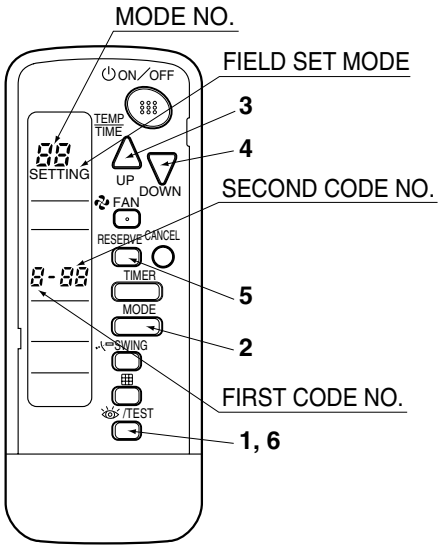

Procedure

1. When in the normal mode, press the /TEST button for a minimum of four seconds, and the FIELD SET MODE is entered.
2. Select the desired MODE NO. with the MODE button.
3. Push the " UP " button and select the FIRST CODE NO.
4. Push the " DOWN " button and select the SECOND CODE NO.
5. Push the RESERVE button and the present settings are SET.
6. Push the /TEST button to return to the NORMAL MODE.

3P107423-1B

(Example)
If the time to clean air filter is set to “Filter Contamination-Heavy”, set Mode No. to “10”, FIRST CODE NO. to “0”, and SECOND CODE NO. to “02”.

MODE NO.	FIRST CODE NO.	DESCRIPTION OF SETTING		SECOND CODE NO. NOTE)				
				01		02		03
10	0	Filter Contamination-Heavy/Light (Setting for spacing time of display time to clean air filter) (Setting for when filter contamination is heavy, and spacing time of display time to clean air filter is to be halved)	Long-life type	light	approx. 2,500 hours	heavy	approx. 1,250 hours	-
	3	Spacing time of display time to clean air filter count (Setting for when the filter sign is not to be displayed)		Display		Do not display		-
12 (*VRV* system)	1	ON/OFF input from outside (Set to enable starting/stopping from remote.)		Forced OFF input		ON/OFF		-
	2	Thermostat differential changeover (Set when using remote controller thermostat sensor.)		1˚C		0.5˚C		-
13	1	Selection of Air Flow Direction (Setting for when a sealing member of air discharge outlet kit has been installed)		F		T		W
	4	Air Flow Direction Range Setting		Upper		Normal		Lower

NOTE
- The SECOND CODE NO. is factory set to “01”. However, for the following cases it is set to “02”.
  - Air Flow Direction Range Setting

Do not use any settings not listed in the table.
For group control with a wireless remote controller, initial settings for all the indoor units of the group are equal.
(For group control, refer to the installation manual attached to the indoor unit for group control.)

6. TEST OPERATION

- Perform test operation according to the instructions in the installation manual attached to the indoor unit.
- After refrigerant piping, drain piping, and electric wiring, operate according to the table to protect the unit.

[PRECAUTIONS]

1. Refer to malfunction code of installation manual attached to the indoor unit, if it does not operate.
2. Refer to the installation manual attached to the outdoor unit for individual operation system types.

Order	Operation
(1)	Open gas side stop valve.
(2)	Open liquid side stop valve.
(3)	Electrify for 6 hours.
(4)	Set to cooling with the remote controller and push ON/OFF button to start operation.
(5)	Push /TEST button twice and operate in TEST OPERATION mode for 3 minutes.
(6)	Push SWING button and confirm its operation.
(7)	Push /TEST button and operate normally.
(8)	Confirm its function according to the operation manual.

1.9 BRC7CB58 / BRC7CB59 (for FXUQ-A)

1.9.1 Features

1.9.2 Dimensions

Unit (mm)

• REMOTE CONTROLLER DIMENSIONS

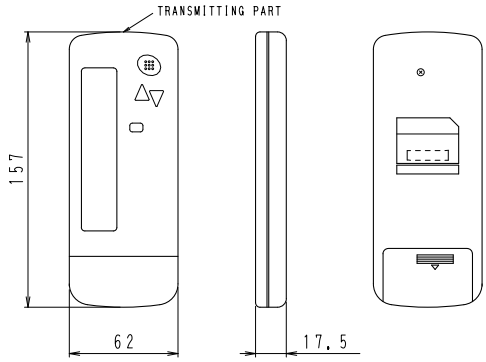

• REMOTE CONTROLLER HOLDER INSTALLATION PROCEDURE
<INSTALLATION TO WALL SURFACE>

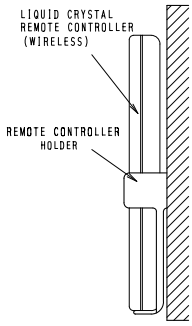

• RECEIVER INSTALLATION PROCEDURE

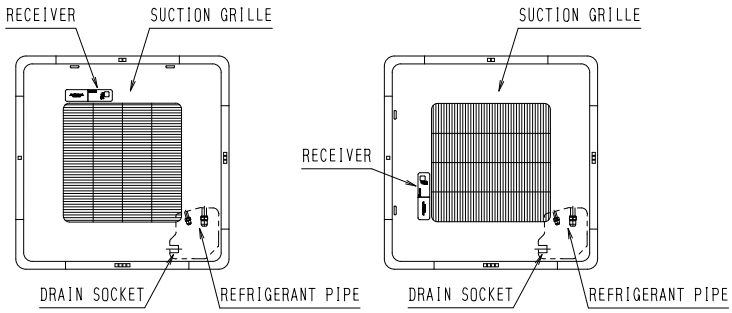

• RECEIVER DETAIL

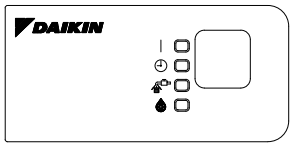

• WIRELESS REMOTE CONTROLLER KIT FOR EACH INDOOR UNIT

INDOOR UNIT	WIRELESS REMOTE CONTROLLER KIT	
	HEAT PUMP SYSTEM	COOLING ONLY SYSTEM
FUQ71 • 100 • 125CVEB FXUQ71 • 100AVEB	BRC7CB58	BRC7CB59

3D079925

1.9.3 Operation Manual

Fig. 1-1

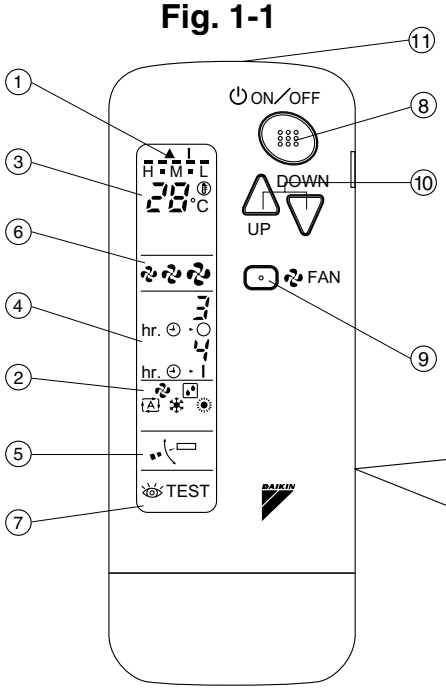

Fig. 1-2

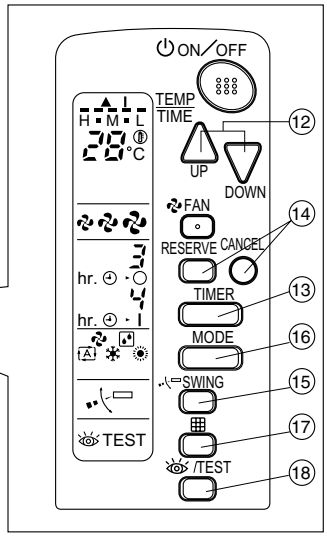

1

Fig. 2-1

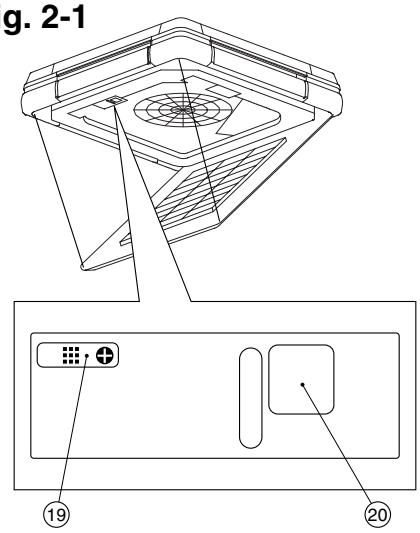

Fig. 2-2

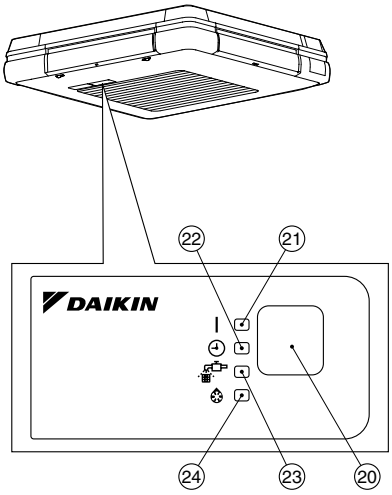

2

[1]

3P302565-3B

CONTENTS

ILLUSTRATIONS..... [1]
PRIOR TO USE..... [2]

1. SAFETY PRECAUTIONS..... 1
2. WHAT TO DO BEFORE OPERATION..... 4
3. NAMES AND FUNCTIONS OF THE OPERATING SECTION..... 4
4. HANDLING FOR WIRELESS REMOTE CONTROLLER 5
5. OPERATION RANGE..... 6
6. INSTALLATION SITE 6
7. OPERATION PROCEDURE..... 6
8. OPERATION CHARACTERISTICS..... 11
9. OPTIMUM OPERATION..... 11
10. MAINTENANCE (FOR SERVICE PERSONNEL)..... 11
11. NOT MALFUNCTION OF THE AIR CONDITIONER..... 11
12. HOW TO DIAGNOSE TROUBLE SPOTS.... 11

The original instructions are written in English. All other languages are translations of the original instructions.

1. SAFETY PRECAUTIONS

To gain full advantage of the air conditioner's functions and to avoid malfunction due to mishandling, please read this operation manual carefully before use.
This product comes under the term "appliances not accessible to the general public".

- **This manual classifies the precautions into WARNINGS and CAUTIONS. Be sure to follow all the precautions below: They are all important for ensuring safety.**

⚠ **WARNING**..... Indicates a potentially hazardous situation which, if not avoided, could result in death or serious injury.

⚠ **CAUTION**..... Indicates a potentially hazardous situation which, if not avoided, may result in minor or moderate injury.
It may also be used to alert against unsafe practices.

- **After reading, keep this manual in a convenient place so that you can refer to it whenever necessary. If the equipment is transferred to a new user, be sure also to hand over the manual.**

⚠ **WARNING**

Be aware that prolonged, direct exposure to cool or warm air from the air conditioner, or to air that is too cool or too warm can be harmful to your physical condition and health.

When the air conditioner is malfunctioning (giving off a burning odor, etc.), turn off the power to the air conditioner and contact your local dealer.
Continued operation under such circumstances may result in a failure, electric shocks or a fire.

Consult your local dealer about installation work.
Doing the work yourself may result in water leakage, electric shocks or a fire.

Consult your local dealer regarding modification, repair and maintenance of the air conditioner.
Improper workmanship may result in water leakage, electric shocks or a fire.

Do not place objects, including rods, your fingers, etc., in the air inlet or outlet.
Injury may result due to contact with the air conditioner's highspeed fan blades.

Beware of a fire in case of refrigerant leakage.
If the air conditioner is not operating correctly, i.e. not generating cool or warm air, refrigerant leakage could be the cause. Consult your local dealer for assistance. The refrigerant used for the air conditioner is safe and normally does not leak. However, if the refrigerant leaks and gets in contact with a naked burner, heater or cooker, it may generate hazardous compounds. Turn off the air conditioner and call your local dealer. Turn on the air conditioner after the qualified service person makes sure to confirm that the leakage is repaired.

Consult your local dealer regarding what to do in case of refrigerant leakage.
When the indoor unit is installed in a small room, it is necessary to take proper measures so that the amount of any leaked refrigerant does not exceed the concentration limit in the event of a leakage. Otherwise, this may lead to an accident due to oxygen depletion.

Contact professional personnel about attachment of accessories and be sure to use only accessories specified by the manufacturer.
If a defect results from your own workmanship, it may result in water leakage, electric shocks or a fire.

3P302565-3B

Consult your local dealer regarding relocation and reinstallation of the air conditioner.
Improper installation work may result in leakage, electric shocks or a fire.

Be sure to use fuses with the correct ampere reading.
Do not use improper fuses, copper or other wires as a substitute, as this may result in electric shocks, a fire, injury or damage to the air conditioner.

Be sure to earth the air conditioner.
Do not earth the air conditioner to a utility pipe, lightning conductor or telephone earth lead. Imperfect earthing may result in electric shocks or a fire.
A high surge current from lightning or other sources may cause damage to the air conditioner.

Be sure to install an earth leakage breaker.
Failure to install an earth leakage breaker may result in electric shocks or a fire.

Consult your local dealer if the air conditioner submerges owing to a natural disaster, such as a flood or typhoon.
Do not operate the air conditioner in that case, or otherwise a malfunction, electric shocks, or a fire may result.

Start or stop the air conditioner with the remote controller. Never use the power circuit breaker for this purpose.
Otherwise, it may cause a fire or water leakage. Furthermore, if an automatic restart control is provided against power failure and the power is recovered, the fan will rotate suddenly and may cause injury.

Do not use the air conditioner in the atmosphere contaminated with oil vapor, such as cooking oil or machine oil vapor.
Oil vapor may cause crack damage to the air conditioner, electric shocks, or a fire.

Do not use the air conditioner in places with excessive oily smoke, such as cooking rooms, or in places with flammable gas, corrosive gas, or metal dust.
Using the air conditioner in such places may cause a fire or air conditioner failures.

Do not use flammable materials (e.g., hairspray or insecticide) near the air conditioner. Do not clean the air conditioner with organic solvents such as paint thinner.
The use of organic solvents may cause crack damage to the air conditioner, electric shocks, or a fire.

Be sure to use a dedicated power supply for the air conditioner.
The use of any other power supply may cause heat generation, a fire, or air conditioner failures.

Consult your local dealer regarding cleaning the inside of the air conditioner.
Improper cleaning may cause breakage of plastic parts, water leakage and other damage as well as electric shocks.

⚠ CAUTION

Do not use the air conditioner for purposes other than those for which it is intended.
Do not use the air conditioner for cooling precision instruments, food, plants, animals or works of art as this may adversely affect the performance, quality and/or longevity of the object concerned.

Do not remove the outdoor unit's outlet side grille.
The grille protects against the unit's high speed fan, which may cause injury.

To avoid oxygen deficiency, ensure that the room is adequately ventilated if equipment such as a burner is used together with the air conditioner.

Do not place flammable sprays or operate spray containers near the air conditioner as this may result in a fire.

Do not put flammable containers, such as spray cans, within 1 m from the air outlet.
The containers may explode because the warm air from the indoor or outdoor unit will affect them.

Before cleaning, be sure to stop the air conditioner operation, turn the power circuit breaker off.
Otherwise, an electric shocks and injury may result.

To avoid electric shocks, do not operate with wet hands.

Do not place objects that are susceptible to moisture directly beneath the indoor or outdoor units.
Under certain conditions, condensation on the unit or refrigerant piping, air filter dirt or drain blockage may cause dripping, resulting in fouling or failure of the object concerned.

Do not place appliances that produce naked flames in places exposed to the airflow from the air conditioner as this may impair combustion of the burner.

Do not place heaters directly below the indoor unit, as resulting heat can cause deformation.

Do not allow a child to mount on the outdoor unit or avoid placing any object on it.
Falling or tumbling may result in injury.

Be sure that children, plants or animals are not exposed directly to airflow from the indoor unit, as adverse effects may ensue.

Do not wash the air conditioner with water, as this may result in electric shocks or a fire.

Do not place water containers (flower vases, etc.) on the indoor unit, as this may result in electric shocks or a fire.

Do not install the air conditioner at any place where there is a danger of flammable gas leakage.
In the event of a gas leakage, build-up of gas near the air conditioner may result in a fire.

Carry out drain piping properly to ensure complete drainage.
If drain piping is not carried out properly, drain will not flow out. Then, dirt and debris may be accumulated in the drain pipe and may cause water leakage. If it occurs, stop the air conditioner and call your local dealer for assistance.

The appliance is not intended for use by unattended young children or persons who are incompetent to operate air conditioners.
It may result in injury or electric shocks.

Children should be watched so that they do not play with the indoor unit or its remote controller.
Accidental operation by a child may result in injury or electric shocks.

To avoid injury, do not touch the air inlet or aluminum fins of the air conditioner.

Do not place objects in direct proximity of the outdoor unit and do not let leaves and other debris accumulate around the unit.
Leaves are a hotbed for small animals which can enter the unit. Once in the unit, such animals can cause malfunctions, smoke or a fire when making contact with electrical parts.

Do not block air inlets nor outlets.
Impaired airflow may result in insufficient performance or trouble.

Do not let children play on or around the outdoor unit.
If they touch the unit carelessly, injury may be caused.

Turn off the power when the air conditioner is not used for long periods of time.
Otherwise, the air conditioner may get hot or catch on a fire due to dust accumulation.

Never touch the internal parts of the remote controller.
Do not remove the front panel. Touching certain internal parts will cause electric shocks and damage to the remote controller. Please consult your local dealer about checking and adjustment of internal parts.

Do not leave the remote controller wherever there is a risk of wetting.
If water gets into the remote controller there is a risk of electrical leakage and damage to electronic components.

Watch your steps at the time of air filter cleaning or inspection.
High-place work is required, to which utmost attention must be paid.
If the scaffold is unstable, you may fall or topple down, thus causing injury.

When using the wireless remote controller, do not put a strong light beam or install an inverter fluorescent lamp near the receiving section on the indoor unit.

The batteries must be removed from the appliance before it is scrapped and they are disposed of safely.

- **NOTE TO SERVICE PERSONNEL**

⚠ WARNING

⚠ RISK OF ELECTRIC SHOCKS OR A FIRE

- When checking the electric components (such as the inside of the control box, fan motor, drain pump, etc.), make sure to shut off all power supply for the air conditioner (including both indoor and outdoor units).
- When cleaning the heat exchanger, make sure to remove the electronic components above. (If they get cleaning agent, there is a risk that the components will burn out because of insulation degradation.)

⚠ CAUTION! DANGER OF ELECTRIC SHOCKS

- Shut off power supply before work.
- Never open the control box lid for 10 minutes after shutting off the power supply because there is residual voltage.
- After opening the control box lid, measure residal voltage between the points shown **Fig. 3** on the Printed Circuit Board by the tester without touching the live part and confirm that the residual voltage is DC50V or below.

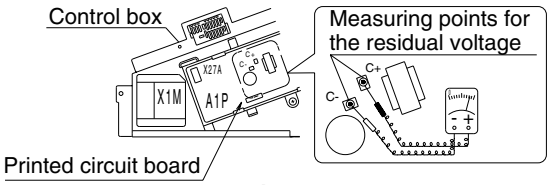

Fig. 3

- After power failure, operation will restart automatically.

2. WHAT TO DO BEFORE OPERATION

Refer to the operation manual attached to the indoor unit.

3. NAMES AND FUNCTIONS OF THE OPERATING SECTION (Refer to Fig. 1-1, 1-2, 2-1, 2-2 on page [1])

1	**DISPLAY "▲" (SIGNAL TRANSMISSION)**
	This lights up when a signal is being transmitted.
2	**DISPLAY "" "" "" "" "" (OPERATION MODE)**
	This display shows the current OPERATION MODE. For cooling only type (BRC7CB59), "" (AUTOMATIC) and "" (HEATING) are not installed.
3	**DISPLAY "" (SET TEMPERATURE)**
	This display shows the set temperature.
4	**DISPLAY "" (PROGRAMMED TIME)**
	This display shows PROGRAMMED TIME of the air conditioner start or stop.
5	**DISPLAY "" (HORIZONTAL BLADE)**
	Refer to page 8.
6	**DISPLAY "" "" "" (FAN SPEED)**
	The display shows the set fan speed.
7	**DISPLAY "TEST" (INSPECTION/ TEST OPERATION)**
	When the INSPECTION/TEST OPERATION BUTTON is pressed, the display shows the system mode is in. Do not operate this button during normal use.
8	**ON/OFF BUTTON**
	Press the button and the air conditioner will start. Press the button again and the air conditioner will stop.
9	**FAN SPEED CONTROL BUTTON**
	Press this button to select the fan speed, Low or Middle or High, of your choice.
10	**TEMPERATURE SETTING BUTTON**
	Use this button for SETTING TEMPERATURE. (Operates with the front cover of the remote controller closed.)
11	**SIGNAL TRANSMITTER**
	This sends the signals to the indoor unit.
12	**TEMPERATURE ADJUSTMENT/ PROGRAMMING TIMER BUTTON**
	Use this button for temperature setting and programming "START and/or STOP" time. (Operates with the front cover of the remote controller opened.)
13	**TIMER MODE START/STOP BUTTON**
	Refer to page 9.
14	**TIMER RESERVE/CANCEL BUTTON**
	Refer to page 9.
15	**AIRFLOW DIRECTION ADJUST BUTTON**
	Refer to page 8, 9.
16	**OPERATION MODE SELECTOR BUTTON**
	Press this button to select OPERATION MODE. "" (COOLING), "" (HEATING), "" (AUTOMATIC), "" (FAN), "" (PROGRAM DRY).
17	**FILTER SIGN RESET BUTTON**
	Refer to the section of MAINTENANCE in the operation manual attached to the indoor unit.
18	**INSPECTION/TEST OPERATION BUTTON**
	This button is used only by qualified service persons for maintenance purposes. Do not operate this button during normal use.
19	**EMERGENCY OPERATION SWITCH**
	This switch is readily used if the remote controller does not work.
20	**RECEIVER**
	This receives the signals from the remote controller.
21	**OPERATING INDICATOR LAMP (Red)**
	This lamp stays lit while the air conditioner runs. It flashes when the air conditioner is in trouble.
22	**TIMER INDICATOR LAMP (Green)**
	This lamp stays lit while the timer is set.
23	**AIR FILTER CLEANING TIME INDICATOR LAMP (Red)**
	Lights up when it is time to clean the air filter.
24	**DEFROST OPERATION LAMP (Orange)**
	Lights up when the defrosting operation has started. (For cooling only type this lamp does not turn on.)

NOTES

- For the sake of explanation, all indications are shown on the display in **Fig. 1** contrary to actual running situations.
- **Fig. 1-2** shows the remote controller with the front cover opened.
- If the AIR FILTER CLEANING TIME INDICATOR LAMP lights up, clean the air filter as explained in the operation manual attached to the indoor unit.
  After cleaning and reinstalling the air filter, press the FILTER SIGN RESET BUTTON on the remote controller. The AIR FILTER CLEANING TIME INDICATOR LAMP on the receiver will go out.
- The DEFROST OPERATION LAMP will flash when the power is turned on. This is not a malfunction.
- Do not place the remote controller where subject to direct sunlight. The display of the remote controller will get discolored and may fail to display information.
  [CAUTIONS]
  Make sure to turn off the unit and disconnect the power supply breaker when taking care of the air conditioner.
  Unless the power supply is disconnected, it may cause electric shocks and injuries.

4. HANDLING FOR WIRELESS REMOTE CONTROLLER

[Precautions in handling remote controller]

Direct the transmitting part of the remote controller to the receiving part of the air conditioner.
If something blocks the transmitting and receiving path of the indoor unit and the remote controller as curtains, it will not operate.

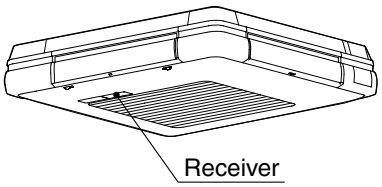

2 short beeps from the receiver indicates that the transmission is properly done.

Transmitting distance is approximately 7 m.

Do not drop or get it wet.
It may be damaged.

Never press the button of the remote controller with a hard, pointed object.
The remote controller may be damaged.

Installation site

- It is possible that signals will not be received in rooms that have electronic fluorescent lighting. Please consult with your local dealer before buying new fluorescent lights.
- If the remote controller operated some other electrical apparatus, move that machine away or consult your local dealer.

Placing the remote controller in the remote controller holder.
Install the remote controller holder to a wall or a pillar with the attached screw.

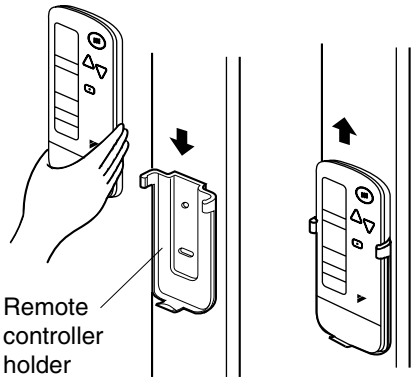

How to put the dry batteries

(1) Remove the back cover of the remote controller to the direction pointed by the arrow mark.

(2) Put the batteries
Use two dry cell batteries (AAA.LR03 (alkaline)). Put dry batteries correctly to fit their (+) and (–).

(3) Close the cover

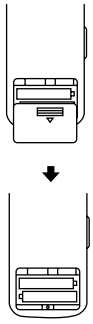

— When to change batteries

Under normal use, batteries last about a year. However, change them whenever the indoor unit doesn't respond or responds slowly to commands, or if the display becomes dark.

3P302565-3B

[CAUTIONS]

- **Replace all batteries at the same time, do not use new and old batteries intermixed.**
- **In case the remote controller is not used for a long time take out all batteries in order to prevent liquid leak of the battery.**

IN THE CASE OF CENTRALIZED CONTROL SYSTEM

If the indoor unit is under centralized control, it is necessary to switch the remote controller's setting. In this case, contact your local dealer.

5. OPERATION RANGE

If the temperature or the humidity is beyond the operation range*, safety devices may work and the air conditioner may not operate, or sometimes, water may drop from the indoor unit.

* Refer to the operation range shown in the operation manual attached to the indoor or outdoor unit.

6. INSTALLATION SITE

Refer to the operation manual attached to the indoor unit.

7. OPERATION PROCEDURE

Refer to Fig. 1 on page [1]

- Operation procedure varies with heat pump type and cooling only type. Contact your local dealer to confirm your system type.
- To protect the unit, turn on the main power switch 6 hours before operation.
- Do not shut off the power supply during seasonal use of the air conditioner.
  This is required in order to activate the air conditioner smoothly.
- If the main power supply is turned off during operation, operation will restart automatically after the power turns back on again.

COOLING, HEATING, AUTOMATIC, FAN, AND PROGRAM DRY OPERATION

Operate in the following order.

- AUTOMATIC OPERATION can be selected only by Heat pump split system and *VRV* Heat recovery system.
- For cooling only type, "COOLING", and "FAN" and "PROGRAM DRY" operation are able to select.

Refer to Fig. 1-1, 2 on page [1]

1 MODE — OPERATION MODE SELECTOR

Press OPERATION MODE SELECTOR BUTTON several times and select the OPERATION MODE of your choice as follows.

■ COOLING OPERATION ..... "❄"
The recommended temperature setting is 26 to 28°C.

■ HEATING OPERATION ..... "☀"
The recommended temperature setting is 18 to 23°C.

■ AUTOMATIC OPERATION..... "A"

- In this operation mode, COOLING/HEATING changeover is automatically conducted.
- The AUTOMATIC OPERATION controls the temperature based on the temperature setting, so it maintains a comfortable temperature throughout the year, and enables energy-saving operation.
  <Example>
  When the indoor temperature decreases to 25°C or less when the temperature setting is at 27°C in the AUTOMATIC COOLING OPERATION, the operation is changed over to the AUTOMATIC HEATING OPERATION. When the indoor temperature reaches 29°C or more, the operation is changed over to the AUTOMATIC COOLING OPERATION.

■ FAN OPERATION ..... "🌀"
Air in the room is circulated.

■ PROGRAM DRY OPERATION ..... "💧"

- The function of this program is to decrease the humidity in your room with the minimum temperature decrease.
- Micro computer automatically determines TEMPERATURE and FAN SPEED.
- This system does not go into operation if the room temperature is below 16°C.

2 ON/OFF — ON/OFF

Press ON/OFF BUTTON.

OPERATING INDICATOR LAMP (Red) lights up or goes off and the system starts or stops OPERATION.

- When the HEATING OPERATION is stopped, FAN OPERATION is performed for 1 minute to remove heat in the indoor unit.

NOTE

- Do not turn OFF power immediately after the unit stops. Then, wait no less than 5 minutes.
  Water is leaking or there is something else wrong with the unit.
- After settings are changed or operation is turned ON/OFF, make sure that the receiving tone of the indoor unit makes a beeping sound.

■ CHARACTERISTICS OF THE COOLING OPERATION (COOLING OPERATION AND AUTOMATIC COOLING OPERATION)

- If the COOLING OPERATION is used when the indoor temperature is low, frost adheres to the heat exchanger of the indoor unit. This can decrease the cooling capacity. In this case, the system automatically switches to DEFROST OPERATION for a while.
  During DEFROST OPERATION, the low fan speed is used to prevent the discharge of melt water. (The remote controller displays the fan speed that is set.)
- When the outside temperature is high, it takes some time until the indoor temperature reaches the set temperature.

■ CHARACTERISTICS OF THE HEATING OPERATION (HEATING OPERATION AND AUTOMATIC HEATING OPERATION)

START OF OPERATION

- It generally takes a longer time for indoor temperature of the HEATING OPERATION to reach the set temperature compared to the COOLING OPERATION. It is advisable to start operation in advance using the TIMER OPERATION.

Perform the following operation to prevent heating capacity decrease and discharge of cool air.

AT THE START OF OPERATION AND AFTER DEFROST OPERATION

- A warm air circulating system is employed, and therefore it takes some time until the entire room is warmed up after the start of operation.
- The indoor fan runs to discharge a gentle wind automatically until the temperature inside the air conditioner reaches a certain level. At this time, the DEFROST OPERATION LAMP on the light receiving unit indicator lights. Leave it as it stands and wait for a while.
  (The remote controller displays the fan speed that is set.)
- The air discharge direction becomes horizontal to prevent a draft of cool air to the inhabitants. (The remote controller will display the set airflow direction.)

DEFROST OPERATION (Frost removal operation for the outdoor unit)

- As the frost on the coil of an outdoor unit increase, heating effect decreases and the system goes into the DEFROST OPERATION.
- The warm air stops, and the DEFROST OPERATION LAMP on the light receiving unit turn on.
  (The remote controller displays the fan speed that is set.)
- After maximum 10 minutes of the DEFROST OPERATION, the air conditioner returns to the HEATING OPERATION.
- The airflow direction becomes horizontal.
  (The remote controller displays the airflow direction that is set.)
- During or after the DEFROST OPERATION, white mist comes out from the air inlet or outlet of the air conditioner.
- A hissing and “Shuh” sound may be heard during this particular operation.

Regarding outside air temperature and heating capacity

- The heating capacity of the air conditioner declines as the outside air temperature falls. In such a case, use the air conditioner in combination with other heating systems.
  (When a combustion appliance is used, ventilate the room regularly.)
  Do not use the combustion appliance where the air from the air conditioner is blown directly toward it.
- When the warm air stays under the ceiling and your feet are cold, we recommend that you use a circulator (a fan to circulate the air inside the room). For details, consult your local dealer.
- When the indoor temperature exceeds the set temperature, the indoor unit discharges a gentle breeze (switches to gentle wind). The airflow direction becomes horizontal. (The remote controller displays the fan speed and airflow direction that are set.)

3P302565-3B

■ CHARACTERISTICS OF THE PROGRAM DRY OPERATION

- This operation lowers the humidity without lowering the indoor temperature. The indoor temperature when the operation button is pressed will be the set temperature. At this time, the fan speed and temperature are set automatically, so the remote controller does not display the fan speed and set temperature.
  To efficiently lower the indoor temperature and humidity, first use the COOLING OPERATION to lower the indoor temperature, and then use the PROGRAM DRY OPERATION. When the indoor temperature is lowered, airflow from the indoor unit may stop.
- When operating continuously at downward airflow direction, air blows in the automatically set direction for a period of time to prevent condensation on the horizontal blades.
- If the PROGRAM DRY OPERATION is used when the indoor temperature is low, frost forms the heat exchanger of the indoor unit. In this case, the system automatically switches to the DEFROST OPERATION for a while.

ADJUSTMENT

For programming TEMPERATURE, FAN SPEED and AIRFLOW DIRECTION, follow the procedure shown below.

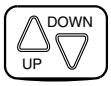

TEMPERATURE SETTING

Press TEMPERATURE SETTING BUTTON and program the setting temperature.

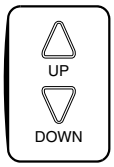

Each time this button is pressed, setting temperature rises 1°C.

Each time this button is pressed, setting temperature lowers 1°C.

- Temperature can not be set in the FAN operation.

In case of automatic operation

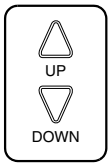

Each time this button is pressed, setting temperature shifts to “H” side.

Each time this button is pressed, setting temperature shifts to “L” side.

[°C]

	H	■	M	■	L
Setting temperature	25	23	22	21	19

- The setting is impossible for FAN operation.

NOTE

- The setting temperature range of the remote controller is 16°C to 32°C.
- After settings are changed or operation is turned ON/OFF, make sure that the receiving tone of the indoor unit makes a beeping sound.

FAN SPEED CONTROL

Press FAN SPEED CONTROL BUTTON.

Low, Middle or High fan speed can be selected.

- The micro computer may sometimes control the fan speed in order to protect the unit.
- The fan speed may be changed automatically depending on the indoor temperature.
  The fan may be stopped, but this is normal.
- It may take some time until the airflow switch is completed, but this is normal.
- The fan speed cannot be set to “automatic”.

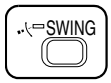

AIRFLOW DIRECTION ADJUST

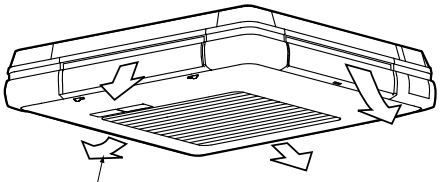

Up and down adjustment

Press the AIRFLOW DIRECTION ADJUST BUTTON to select the airflow direction as shown below.

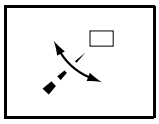

DISPLAY appears and the airflow direction continuously varies. (Automatic swing setting)

Press AIRFLOW DIRECTION ADJUST BUTTON to select the air direction of your choice.

DISPLAY vanishes when the airflow direction is fixed (Fixed airflow direction setting).

MOVEMENT OF THE HORIZONTAL BLADE

For the following conditions, micro computer controls the airflow direction so it may be different from the display.

Operation mode	• COOLING • AUTOMATIC COOLING • PROGRAM DRY	• HEATING • AUTOMATIC HEATING
Up and down direction	Air blows in the automatic set direction for a period of time to prevent condensation on the horizontal blades. • When operating continuously at downward airflow direction	The airflow direction becomes horizontal so that it does not blow directly toward your body. • When room temperature is higher than the set temperature • When the HEATING OPERATION starts or during DEFROST OPERATION (if frost forms on the outdoor unit)

PROGRAM TIMER OPERATION

Operate in the following order.

- The timer is operated in the following two ways.
  Programming the stop time (◷ ▸ ○)
  .... The air conditioner stops operating after the set time has elapsed.
  Programming the start time (◷ ▸ |)
  .... The air conditioner starts operating after the set time has elapsed.
- The start and the stop time can be simultaneously programmed.
- The timer setting is effective only once. When using the TIMER operation every day, the setting is required before each use.

1 TIMER

TIMER MODE START/STOP

Press the TIMER MODE START/STOP BUTTON several times and select the mode on the display.

The display flashes.
For setting the timer stop .... "◷ ▸ ○"
For setting the timer start .... "◷ ▸ |"

2 UP DOWN

PROGRAMMING TIMER

Press the PROGRAMMING TIMER BUTTON and set the time for stopping or starting the air conditioner.

UP — When this button is pressed, the time advances by 1 hour.

DOWN — When this button is pressed, the time goes backward by 1 hour.

- Keep pressing the button to change the setting time continuously.
- The timer can be programmed a maximum of 72 hours.

3 RESERVE

TIMER RESERVE

Press the TIMER RESERVE BUTTON.

The timer setting procedure ends.
The display changes from flashing light to a constant light.

- Make sure that the receiving tone of the indoor unit makes a beeping sound. If the receiving tone does not sound, press the TIMER CANCEL BOTTON, and then set the timer using steps 1 to 3 again.

4 CANCEL

TIMER CANCEL

Press the TIMER CANCEL BUTTON to cancel programming.

The display vanishes.

- Make sure that the receiving tone of the indoor unit makes a beeping sound. If the receiving tone does not sound, set the timer using steps 1 to 3, and then press the TIMER CANCEL BUTTON again.

For example.

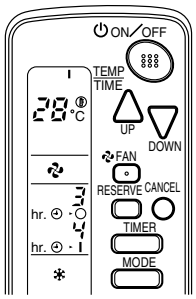

When the timer is programmed to stop the system after 3 hours and start the air conditioner after 4 hours, the air conditioner will stop after 3 hours and then 1 hour later the air conditioner will start.

NOTE

- After the timer is programmed, the display shows the remaining time.

EMERGENCY OPERATION

When the remote controller does not work due to battery failure or the absence thereof, use the switch in the suction grille of the indoor unit. When the remote controller does not work, even if the batteries air replaced, contact your local dealer.

[START]

1 **Press the EMERGENCY OPERATION SWITCH.**

- The air conditioner operates in the previous mode.
- The air conditioner operates with the previously set fan speed.

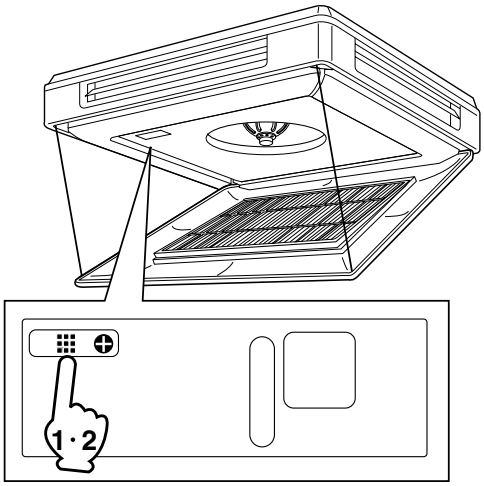

This display is located next to the air outlet of the indoor unit. (Refer to **Fig. 2-1** on page [1])

[STOP]

2 **Press the EMERGENCY OPERATION SWITCH again.**

PRECAUTIONS FOR GROUP CONTROL SYSTEM OR TWO REMOTE CONTROLLER CONTROL SYSTEM

This system provides two other control systems beside individual control (one remote controller controls one indoor unit) system. Confirm the following if your system is of the following control system type.

■ **Group control system**

- One remote controller controls up to 16 indoor units.
- All indoor units are equally set.

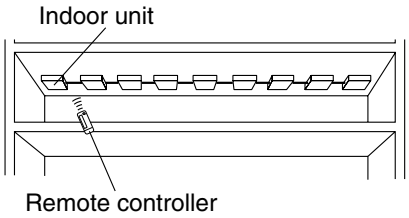

■ **Two remote controller control system**

Two remote controllers (wired and wireless) control one indoor unit. (In case of group control system, one group of indoor units)
The air conditioner follows individual operation.

- Cannot have two remote controller control system with only wireless remote controllers. (It will be a two remote controller control system having one wired and one wireless remote controllers.)
- Under two remote controller control system, wireless remote controller cannot control timer operation.
- While the two remote controller control is operating, the wireless remote controller displays the OPERATION MODE only.
- If the wired remote controller is used for operation, the display on the wireless remote controller does not change.

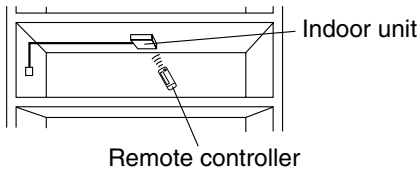

NOTE

- Contact your local dealer in case of changing the combination or setting of group control and two remote controller control systems.
- Please do not change the combination and settings for the group operation and two remote controller control systems by yourself, but be sure to ask your local dealer.

8. OPERATION CHARACTERISTICS

Refer to the operation manual attached to the indoor unit.

9. OPTIMUM OPERATION

Refer to the operation manual attached to the indoor unit.

10. MAINTENANCE (FOR SERVICE PERSONNEL)

Refer to the operation manual attached to the indoor unit.

11. NOT MALFUNCTION OF THE AIR CONDITIONER

Refer to the operation manual attached to the indoor unit.

And the following symptoms do not indicate air conditioner malfunction

I. THE AIR CONDITIONER DOES NOT OPERATE

- **The receiving tone of the indoor unit makes a triple beeping sound (normally, "beep-beep").**
  This is because the air conditioner is under centralized control.
- **After the HEAT OPERATION is started, the DEFROST OPERATION LAMP located on the indoor unit lights up.**
  The indoor fan runs to discharge a gentle wind automatically until the temperature inside the air conditioner reaches a certain level. At this time, the DEFROST OPERATION LAMP on the light receiving unit indicator lights. Leave it as it stands and wait for a while.

II. COOLING AND HEATING OPERATIONS CAN NOT BE SWITCHED

- **The receiving tone of the indoor unit makes a long beeping sound.**
  An unavailable mode was set for the indoor unit under operation changeover control.

III. THERE IS NO DISPLAY OR ALL PARTS ARE DISPLAYED

- **When a button on the remote controller is pressed.**
  The batteries have run out.

12. HOW TO DIAGNOSE TROUBLE SPOTS

I. EMERGENCY STOP

When the air conditioner stops in emergency, the OPERATING INDICATOR LAMP on the indoor unit starts blinking.
Take the following steps yourself to read the malfunction code that appears on the display. Contact your local dealer with this code. It will help pinpoint the cause of the trouble, speeding up the repair.

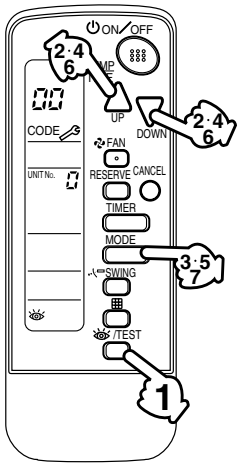

Press the INSPECTION/TEST OPERATION BUTTON to select the inspection mode "".

"0" appears on display and blinks.
"UNIT No." lights up.

Press PROGRAMMING TIMER BUTTON and change the unit number.

Press to change the unit number until the indoor unit beeps and perform the following operation according to the number of beeps.

Number of beeps

3 short beeps ..... Perform all steps from 3 to 6.

1 short beep ..... Perform 3 and 6 steps.

1 long beep ..... Normal state

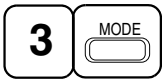

Press OPERATION MODE SELECTOR BUTTON.

"0" on the left-hand of the malfunction code blinks.

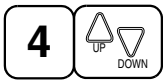

Press PROGRAMMING TIMER BUTTON and change the malfunction code.

Press until the indoor unit beeps twice.

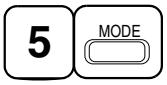

Press OPERATION MODE SELECTOR BUTTON.

"0" on the right-hand of the malfunction code blinks.

Press PROGRAMMING TIMER BUTTON and change the malfunction code.

Press until the indoor unit makes a long beep.
The malfunction code is fixed when the indoor unit makes a long beep.

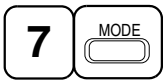

Reset of the display

Press OPERATION MODE SELECTOR BUTTON to get the display back to the normal state.

II. IN CASE BESIDES EMERGENCY STOP

1. **The air conditioner does not operate at all.**
   - Check if the receiver is exposed of sunlight or strong light. Keep receiver away from light.
   - Check if there are batteries in the remote controller. Place the batteries.
   - Check if the indoor unit number and wireless remote controller number are equal.

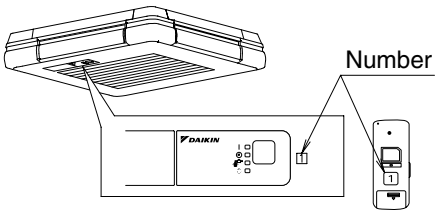

Operate the indoor unit with the remote controller of the same number.
Signal transmitted from a remote controller of a different number cannot be accepted. (If the number is not mentioned, it is considered as "1".)

2. **The air conditioner operates but it does not sufficiently cool or heat.**
   - Check if the set temperature is not proper. (Refer to page 8)
   - Check if the FAN SPEED is set to LOW SPEED. (Refer to page 8)
   - Check if the airflow direction is not proper. (Refer to page 8)

   If the problem is not solved after checking the above points, please do not try to repair it yourself. In such cases, always consult your local dealer. At this time, please tell the symptom and model name (written on the manufacturer's label).

Contact your local dealer in the following case.

⚠ WARNING

When you detect a burning odor, shut OFF power immediately and contact your local dealer. Using the equipment in anything but proper working condition can result in equipment damage, electric shock and/or a fire.

[Trouble]
The OPERATING INDICATOR LAMP of the indoor unit is flashing and the unit does not work at all. (Refer to page 4)

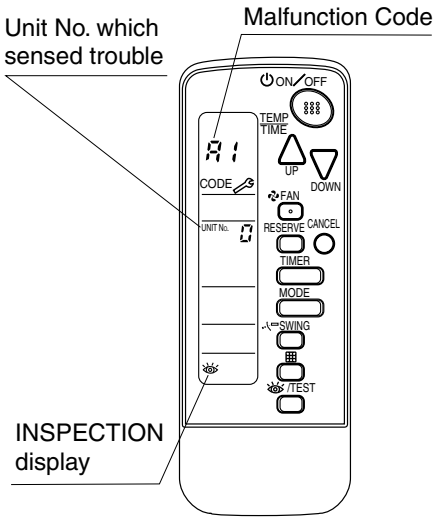

[Remedial action]
Check the malfunction code (A1 - UF) on the remote controller and contact your local dealer. (Refer to page 11)

1.9.4 Installation Manual

DAIKIN

BRC7CB58 BRC7CB59	Wireless Remote Controller Kit	Installation manual

2

CONTENTS

1. SAFETY PRECAUTIONS 1
2. BEFORE INSTALLATION 2
3. REMOTE CONTROLLER INSTALLATION 3
4. RECEIVER INSTALLATION 4
5. FIELD SETTING 9
6. TEST OPERATION 11

The original instructions are written in English. All other languages are translations of the original instructions.

1. SAFETY PRECAUTIONS

Please read these “SAFETY PRECAUTIONS” carefully before installing air conditioning equipment and be sure to install it correctly.

This manual classifies the precautions into WARNINGS and CAUTIONS.
Be sure to follow all the precautions below.
They are all important for ensuring safety.

⚠ **WARNING** ..... Indicates a potentially hazardous situation which, if not avoided, could result in death or serious injury.

⚠ **CAUTION** ..... Indicates a potentially hazardous situation which, if not avoided, may result in minor or moderate injury. It may also be used to alert against unsafe practices.

After the installation is completed, test the air conditioner and check if the air conditioner operates properly. Give the user adequate instructions concerning the use and cleaning of the indoor unit according to the operation manual. Ask the user to keep this manual and the operation manual together in a handy place for future reference.

⚠ **WARNING**

- **Make sure to turn off the power supply before starting the installation.**
- **Due to high voltage, do not open control box lid for ten minutes after the safety breaker is switched off.**
- **After the box is opened, measure the voltages of the points shown below Printed Circuit Board with a tester and confirm that the voltages are not higher than DC50V. (Refer to Fig.1)**
  Do not touch live parts when carrying out this work.

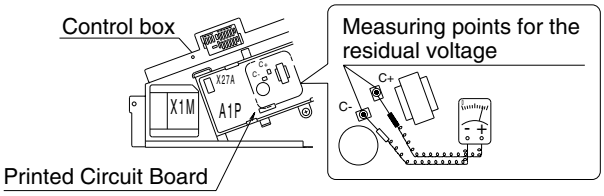

Fig. 1

3P091240-7L

⚠ CAUTION

- **Refer also to the installation manual attached to the indoor unit.**
- **Confirm that following conditions are satisfied prior to installation.**
  - **Ensure that nothing interrupts the operation of the wireless remote controller. (Ensure that there is neither a source of light nor fluorescent lamp near the receiver. Also, ensure that the receiver is not exposed of direct sunlight.)**
  - **Ensure that the operation indicator lamp and other indicators are easy to see.**
- **The wireless remote controller kit is not intended for use in a potentially explosive atmosphere.**

2. BEFORE INSTALLATION

2-1 ACCESSORIES

Check if the following accessories are attached to this kit.

Name	(1) Receiver assembly	(2) Transmitter assembly	(3) Receiver label	(4) Wire harness	(5) Clamp	(6) Wireless remote controller
Quantity	1 set	1 set	1 pc.	1 pc.	5 pcs.	1 pc.
Shape	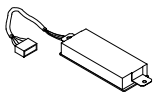	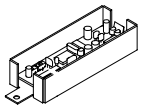	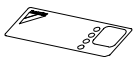	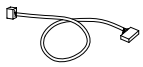	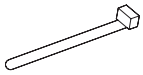	

Name	(7) Dry cell battery LR03 (AM4)	(8) Remote controller holder	(9) Screw for installing remote controller holder	(10) Screw	(11) Unit No. label
Quantity	2 pcs.	1 pc.	2 pcs.	4 pcs.	1 pc.
Shape	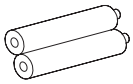	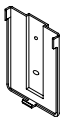	M3.5 × 16	M4 × 12	

Name	(12) Operation manual	(13) Installation manual
Quantity	1 pc.	1 pc.
Shape	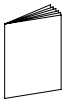	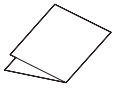

2-2 NOTE TO THE INSTALLER

- Have the customer actually operate the system while looking at the operation manual. Instruct the customer how to operate the system.

3. REMOTE CONTROLLER INSTALLATION

⟨Installing wireless remote controller⟩

- Do not throw the remote controller or impose large shocks. Also, do not store where it may be exposed to moisture or direct sunlight.
- When operating, point the transmitting part of the remote controller in the direction of the receiver. (Refer to the operation manual (12) attached to this kit.)
- The direct transmitting distance of the remote controller is approximately 7 meters.
- The signal cannot be transmitted if something such as curtains blocks the receiver and the remote controller.

- **Installing to a wall or a pillar**
  1. Fix the remote controller holder (8) with the screws (9).
  2. Slide the wireless remote controller (6) into the remote controller holder (8) from the top.

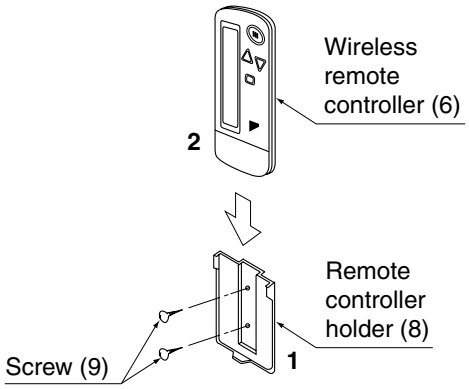

Fig. 2

- **How to insert the batteries**
  1. Open the back cover of the wireless remote controller by sliding it in the direction of the arrow.
  2. Insert the attached dry cell batteries (7). Properly insert, set the batteries by matching the (+) and (–) polarity marks as indicated. Then close the back cover as before.

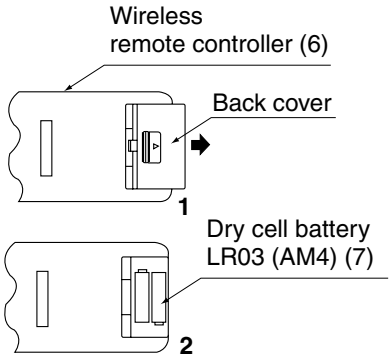

Fig. 3

4. RECEIVER INSTALLATION

(1) Preparations before installation

- Installing the receiver and transmitter are easier to do before hanging the indoor unit.
- You can install the receiver and transmitter as shown in the examples below according to the direction of the suction grille.
  Also, after installing the receiver and transmitter, you cannot change the opening and closing direction of suction grille any more.

After confirming the opening and closing direction, decide the installation position.

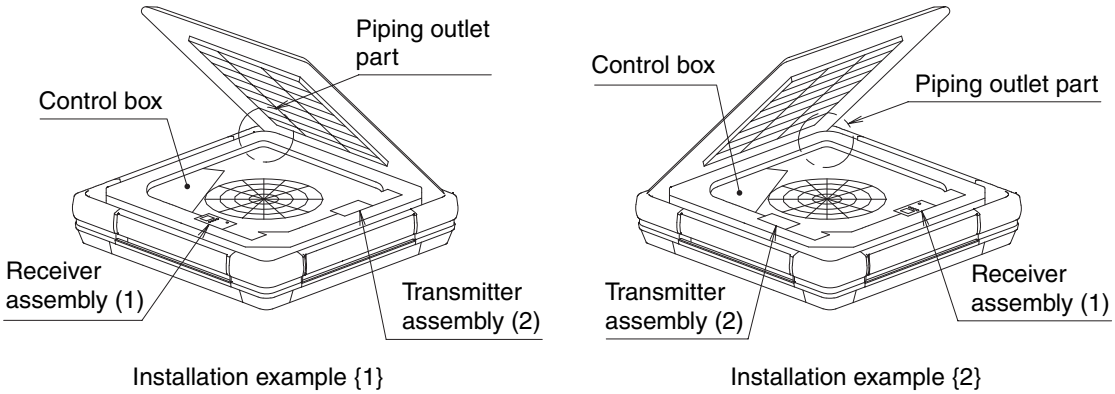

Fig. 4

(2) Apply the receiver label

1) Remove the brand name label of the indoor unit. It is applied by the adhesive agent, so remove it.
2) Apply the receiver label (3). (Apply according to the form of label application part.)

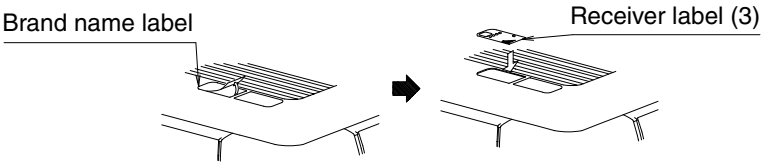

Fig. 5

(3) Determination of address and MAIN/SUB remote controller.

- **Address setting:**
  In case of setting multiple wireless remote controllers to operate in one room, perform address setting for the receiver and the wireless remote controller.
  (This includes an individual remote controller control using the group operation.)
  (For the wiring for the group operation, please refer to the installation manual attached to the indoor unit and technical guide.)
- **MAIN/SUB setting**
  In case of using the wired remote controller together (for 2 remote controller controls), change the MAIN/SUB switch of the receiver.

SETTING PROCEDURE

1. Setting the receiver

Set the wireless address switch (SS2) on the transmitter assembly (2) according to Table 1.

Table 1

Unit No.	No. 1	No. 2	No. 3
Wireless address switch (SS2)	1 2 3	1 2 3	1 2 3

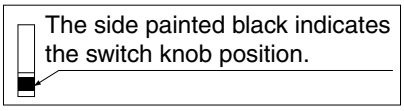

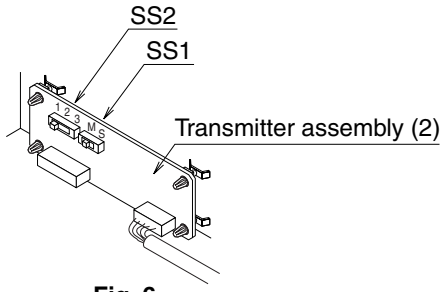

Fig. 6

When using both a wired and a wireless remote controller for 1 indoor unit, the wired controller should be set to MAIN. Therefore, set the MAIN/SUB switch (SS1) of the receiver to SUB.
(Refer to Table 2)
(The wired remote controller will be “MAIN”.)

Table 2

	MAIN	SUB
MAIN/SUB switch (SS1)	M S	M S

2. Setting the address of wireless remote controller (It is factory set to “1”)

⟨Setting from the remote controller⟩

1. Open the cover on the display of the wireless remote controller (6).
2. Press the [ ] and [/TEST] buttons at the same time for 4 seconds or more to go into the FIELD SETTING mode.
   (The liquid crystal display on the remote controller is shown in Fig. 7.)
3. Press the [FAN] button and select the multiple setting. (A/b setting) (Refer to Table 3 on page 6)
   (Each time the button is pressed, the display changes from “A” to “b”.)
4. Press the “UP” and “DOWN” buttons for set the address.

   →1→2→3→4→5→6

   The address can be set from 1 to 6, but set it from 1 to 3 to correspond with the receiving part. (Transmitter assembly (2))
   (It does not work when it is set from 4 to 6.)
5. Press the [RESERVE] button and define the setting.
6. Press the [/TEST] button for 1 second or more and the setting is completed.
   (It returns to normal display.)

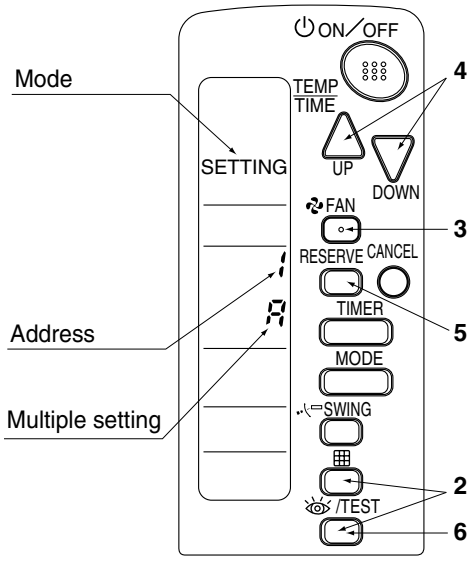

Fig. 7

Multiple settings A/b

When the air conditioner is being operating by outside control (central remote controller, etc.), it sometimes does not respond to ON/OFF and temperature setting commands from this remote controller. Check what setting the customer wants and make the multiple setting as shown Table 3.

Table 3

Remote controller		Indoor unit	
Multiple setting	Remote controller display	Movement when the operation is controlled by the other air conditioners and equipment	For other than on left
A: Standard	Keep indicating.	When operation changeover, temperature setting, etc. is carried out from the remote controller, the indoor unit rejects the commands. (Signal receiving sound is “peeh” or “pick-pick-pick”) As a result, a discrepancy between the operation state of the indoor unit and the indication of the remote controller display occurs.	All commands accepted. (Signal receiving sound is “pick-pick”)
b: Multi System	Indicating for a short time after pressing button.	When operation changeover, temperature setting, etc. is carried out from the remote controller, the indoor unit rejects the commands. (Signal receiving sound is “peeh” or “pick-pick-pick”) Since the indication of the remote controller is turned off, no discrepancy such as mentioned above occurs.	

3. Put the attached unit No. label (11) on the suction grille of the indoor unit and the back of the wireless remote controller (6).

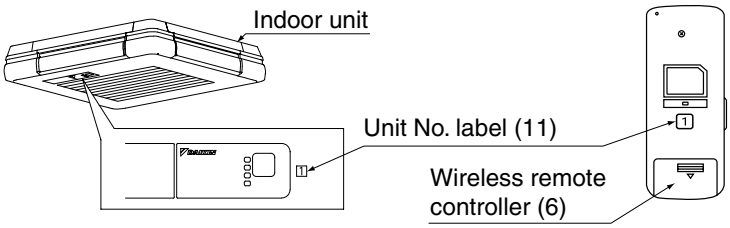

Fig. 8

[PRECAUTIONS]
Incorrect setting of the MAIN/SUB switch (SS1) makes the defrosting operation lamp at the signal receiver blink, and also stops the remote controller operation.
Set the Unit No. of the receiver and the wireless remote controller to be equal. If the settings differs, the signal from the remote controller cannot be transmitted.

(4) Installation of receiver and transmitter assembly

[1] According to the installation manual attached to the indoor unit, remove the suction grille and control box lid.

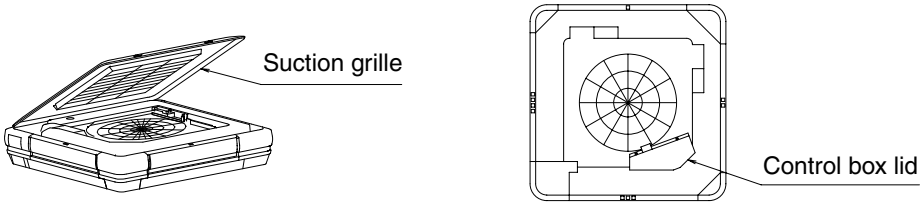

Fig. 9

[2] Install the transmitter assembly (2) and receiver assembly (1) to the indoor unit body.
For installation position, refer **"(1) Preparations before installation"**.

1. Remove the cover of transmitter assembly (2), connect the wire harness of receiver assembly (1) to the connector (X1A) on the transmitter assembly (2), and connect the wire harness (4) to the connector (X2A).
   After connecting, put back the cover as it was.

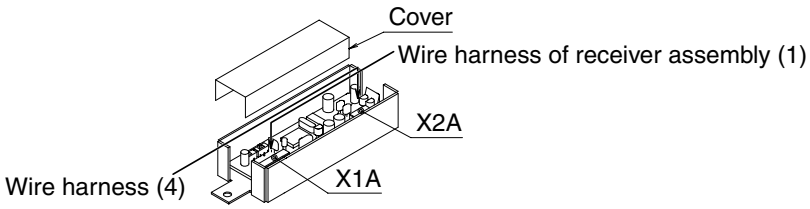

Fig. 10

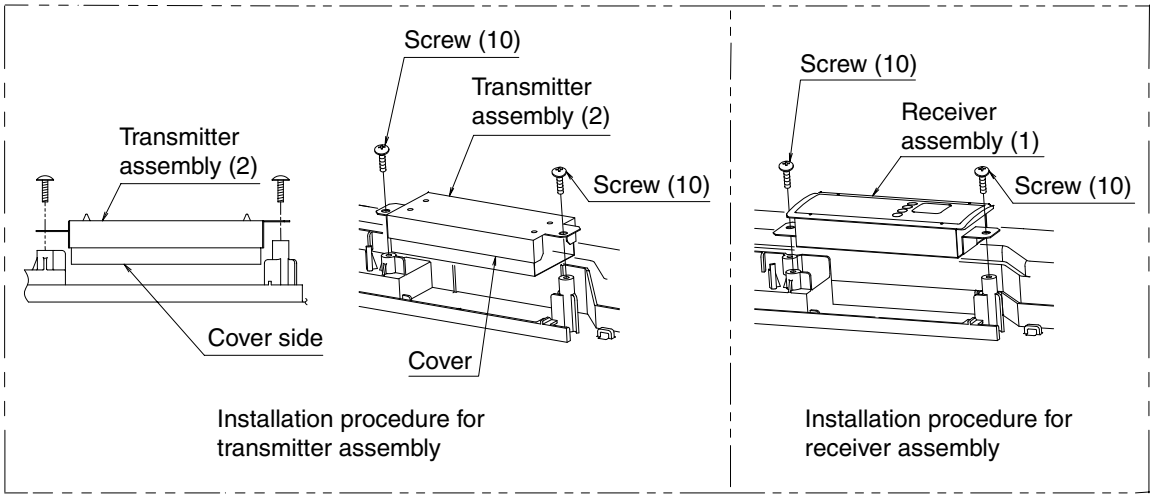

Fig. 11

<For installation example {1}>

2. Install the transmitter assembly (2) to the indoor unit body. (2 screws)
   At that time, let the wire harness from the receiver assembly (1) go under the transmitter assembly (2).
3. Install the receiver assembly (1) to the indoor unit body. (2 screws)
   At that time, let the wire harness from the transmitter assembly (2) go under the receiver assembly. Put together the extra harness under the receiver assembly (1).
4. Connect the wire harness (4) from the transmitter assembly (2) to the connector on the Printed Circuit Board (X24A) inside of the control box.
5. Band these wires together with the swing motor lead wiring by the clamps (5) at 4 places including the 2 clamp parts of the bell mouse.

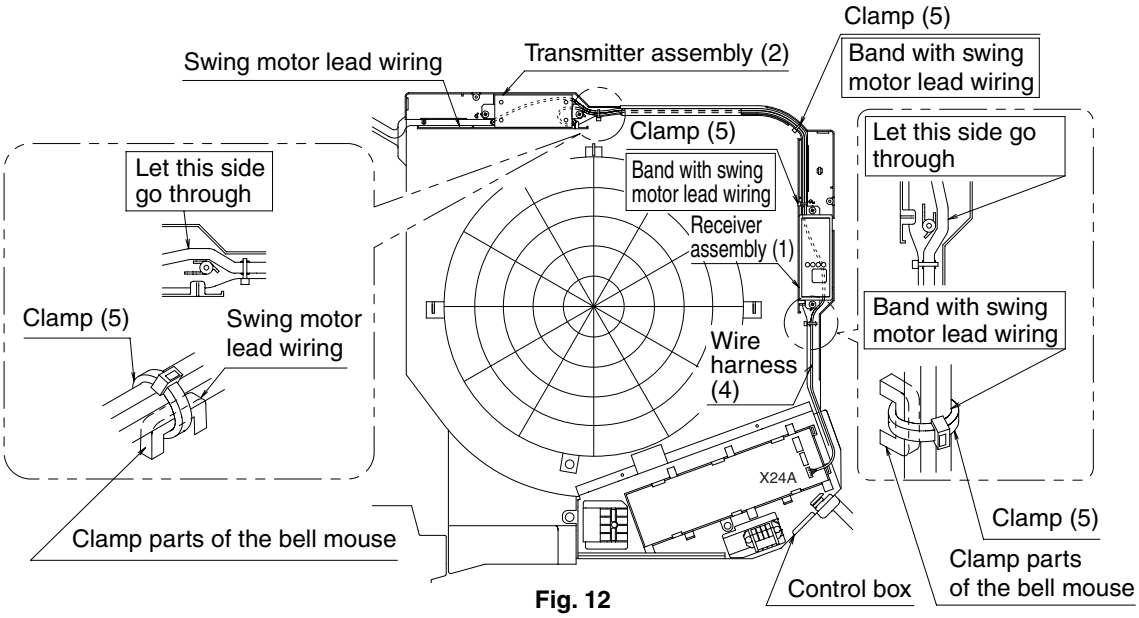

Fig. 12

<For installation example {2}>

2. Install the receiver assembly (1) to the indoor unit body. (2 screws)
   At that time, let the wire harness from the transmitter assembly (2) go under the receiver assembly (1).
3. Install the transmitter assembly (2) to the indoor unit body. (2 screws)
4. Connect the wire harness (4) from the transmitter assembly (2) to the connector (X24A) on the Printed Circuit Board inside of the control box.
5. Band these wires together with the swing motor lead wiring by the clamp (5) at 5 places including the 2 clamp parts of the bell mouse.
   At that time, bundle the extra wire as shown in Fig.13.

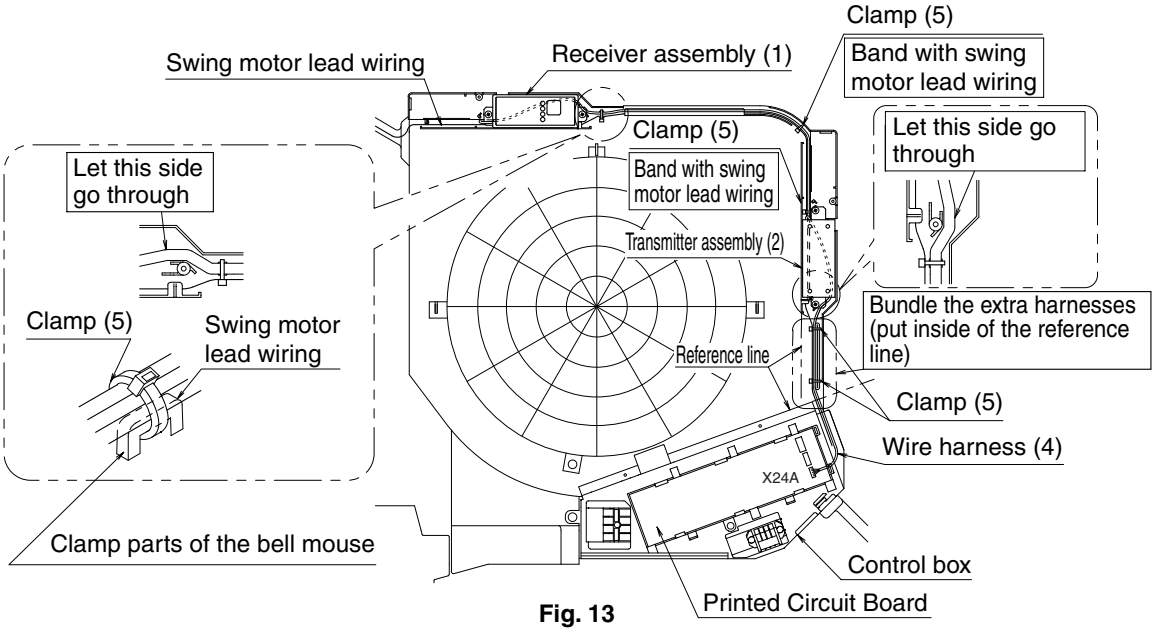

Fig. 13

[3] Install the control box lid.

(5) Install the suction grille

- According to the installation manual attached to the indoor unit, install the suction grille.
  At that time, confirm that the position at the receiver label and the receiver assembly match.

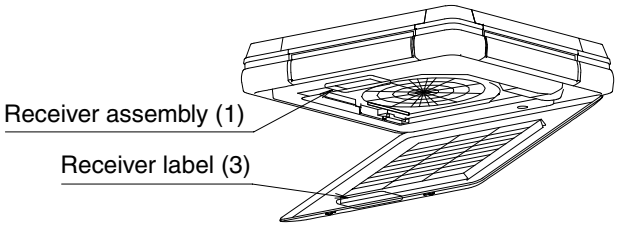

Fig. 14

5. FIELD SETTING

If optional accessories are mounted on the indoor unit, the indoor unit setting may have to be changed. Refer to the instruction manual (optional hand book) for each optional accessory.

Procedure

1. When in the normal mode, press the /TEST button for four seconds or more, and the FIELD SET MODE is entered.
2. Select the desired MODE NO. with the MODE button.
3. Push the " UP " button and select the FIRST CODE NO.
4. Push the " DOWN " button and select the SECOND CODE NO.
5. Push the RESERVE button and the present settings are SET.
6. Push the /TEST button to return to the NORMAL MODE.

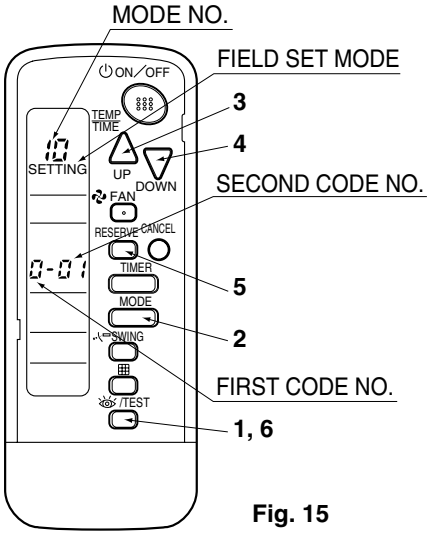

Fig. 15

(Example)
If the time to clean air filter is set to “Filter Contamination-a lot”, set MODE NO. to “10”, FIRST CODE NO. to “0”, and SECOND CODE NO. to “02”.

MODE NO.	FIRST CODE NO.	DESCRIPTION OF SETTING	SECOND CODE NO. NOTE)				
			01		02		03
10	0	Filter Contamination-a little/a lot (Setting for spacing time of display time to clean air filter) (Setting for when filter contamination is a lot, and spacing time of display time to clean air filter is to be halved)	a little	Approx. 2500 hrs.	a lot	Approx. 1250 hrs.	–
	3	Spacing time of display time to clean air filter count (Use “Without indication” setting when cleaning indication is not necessary such as the case of periodical cleaning being carried out.)	With indication		Without indication		–
11	0	Setting number of the connected indoor units as simultaneous operation multi system	Pair		Twin		Triple
	2	Fan during thermostat-OFF (Cooling and Heating)	Standard		Stop		–
12 (*VRV* system)	1	ON/OFF input from outside (Set to enable starting/stopping from remote.)	Forced OFF input		ON/OFF		–
	2	Thermostat differential changeover (Set when using remote controller thermostat sensor.)	1°C		0.5°C		–
12	6	Fan speed during cooling thermostat-OFF	LL (Extra Low)		Setting		–
	3	Fan speed during heating thermostat-OFF	LL (Extra Low)		Setting		–
13	0	High ceiling setting (Setting for when installed in a ceiling higher than 2.7m. For details, refer to the installation manual attached to the indoor unit.)	Standard		High ceiling 1		High ceiling 2
	1	Selection of Airflow Direction (Setting for when a blocking pad kit has been installed)	4-way air discharge		3-way air discharge		2-way air discharge

NOTE
- The settings shown by “ ” in the table indicate those when shipped from the factory.

Do not perform setting that are not listed in the table.
For group control with a wireless remote controller, initial settings for all the indoor units of the group are equal.
(Refer to the installation manual attached to the indoor unit for group control.)

6. TEST OPERATION

- Perform test operation according to the instructions in the installation manual attached to the indoor unit.
- After completing the refrigerant piping, drain piping, and electrical wiring, perform operation in accordance with the procedure shown on Table 4 in order to protect the unit.

Table 4

Order	Operation description
(1)	Completely open the stop valve on gas side.
(2)	Completely open the stop valve on liquid side.
(3)	Turn the power on at least 6 hours before operating the unit.
(4)	Set to the cooling operation using the remote controller, and then start the operation by pressing the ON/OFF button.
(5)	Press the /TEST button 2 times, and let the operation continue for 3 minutes in the test operation mode.
(6)	Press the SWING button to check the actuation.
(7)	Press the /TEST button 1 time to return to normal operation mode.
(8)	Check the functions in accordance with operation manual (12).

[PRECAUTIONS]

1. Refer to the operation manual (12) attached to this kit if it does not operate.
2. Refer to the installation manual attached to the outdoor unit for *VRV* system types.

2. Remote Controller (Wired Type)

2.1 BRC1C62

2.1.1 Features

Operation Functions with Heat Reclaim Ventilator	BRC1C62
ON / OFF Operation with Air Conditioner	○
Independent operation in intermediate season	○
Ventilation mode change over (Auto / Heat Reclaim Ventilator / Normal)	○
Air flow change over (Auto / High / Low)	○
Setting of precooling / preheating	□
Setting of fresh-up operation	□
Filter sign display	○

□: Initial Setting Only (Field setting by well known service person)

- Large liquid crystal screen displays complete operating status.
- Digital display lets you set temperature in 1°C units.
- Lets you individually program by timer the respective times for operation start and stop within a maximum of 72 hours.
- Equipped with a thermostat sensor in the remote controller that makes possible more comfortable room temperature control.
- Monitors room temperature and set temperature by micro-computer, and can select cool/heat operation mode automatically. (*VRV* System Heat Recovery Series only)
- Enables you to select cool / heat / fan operation mode with the indoor remote controller of your choice without using the cool / heat selector. (*VRV* System Inverter series, Heat Recovery series)
- Constantly monitors malfunctions in the system for 40 items, and is equipped with a “self-diagnosis function” that lets you know by message immediately when a malfunction occurs.
- Lets you carry out various field settings by remote controller.
- Ventilation mode change over and ventilation airflow switch for Heat reclaim ventilator.

Note:
For connection unit series

* If indoor units from the connection unit series are connected within a single refrigerant system to indoor units from any other series, cooling/heating switchover will not be possible using the remote controller of the connection unit series indoor units, However, if the remote controller of an indoor unit from the other series is set as a master remote controller, cooling/heating switchover will be possible.

* If all indoor units are from the connection unit series, an outdoor unit Cool/Heat selector will be needed to enable cooling/heating switchover.

* In case of Heat Recovery System
Cooling/Heating changeover is possible when connecting with BS unit.

2.1.2 Dimensions

Unit (mm)

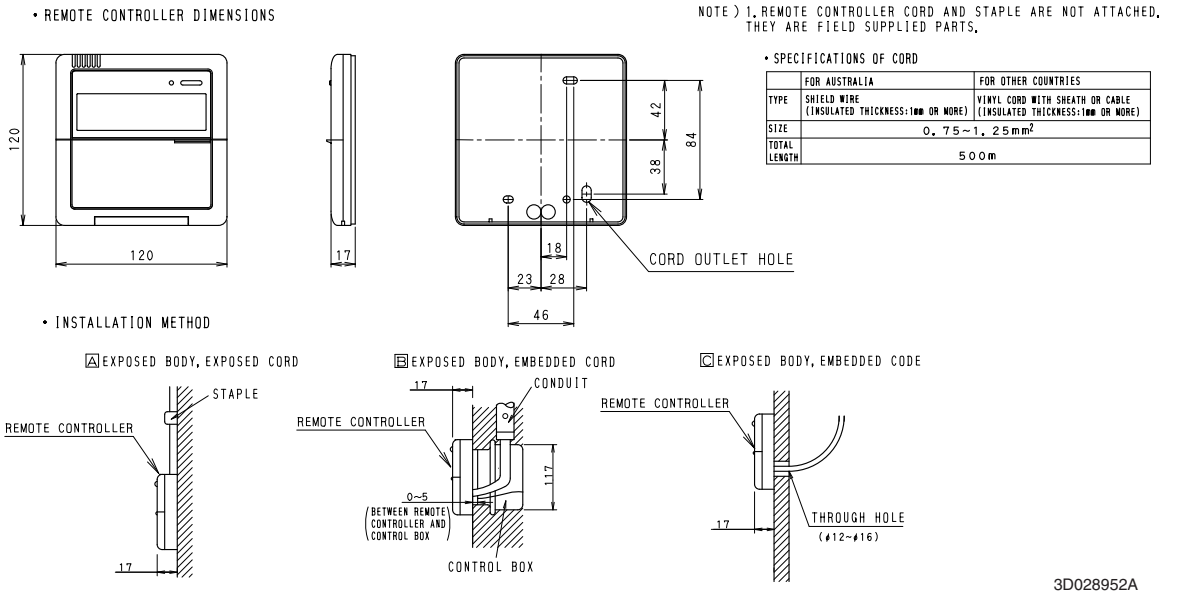

2.1.3 Name and Function

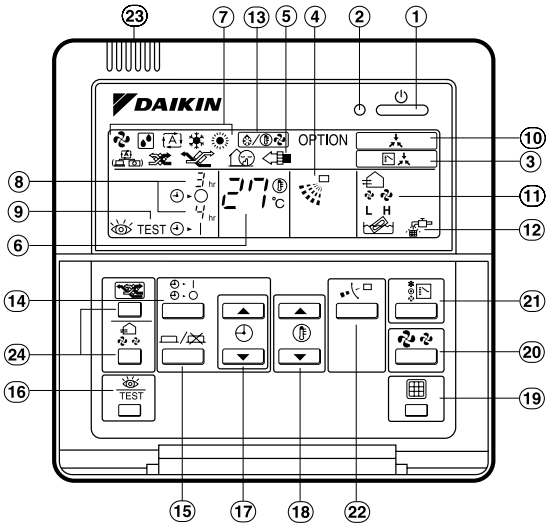

1. **On/off button**
   Press the button and the system will start. Press the button again and the system will stop.
2. **Operation lamp (red)**
   The lamp lights up during operation.
3. **Display " " (changeover under control)**
   It is impossible to changeover heat/cool with the remote controller which display this icon.
4. **Display " " (air flow flap)**
5. **Display " OPTION " (ventilation/air cleaning)**
   This display shows that Heat Reclaim Ventilator is in operation. (these are optional accessories)
6. **Display " " (set temperature)**
   This display shows the temperature you have set.
7. **Display " " " " " " " " (operation mode)**
   This display shows the current operation mode.
8. **Display " " (programmed time)**
   This display shows the programmed time of the system start or stop.
9. **Display " TEST " (inspection/test operation)**
   When the inspection/test operation button is pressed, the display shows the mode in which the system actually is.
10. **Display " " (under centralized control)**
    When this display shows, the system is under centralized control. (This is not a standard specification.)
11. **Display " " (fan speed)**
    This display shows the fan speed you have selected.
12. **Display " " (time to clean air filter)**
13. **Display " " (defrost/hot start)**
14. **Timer mode start/stop button**
15. **Timer on/off button**
16. **Inspection/test operation button**
    This button is only used by qualified service persons for maintenance purposes.
17. **Programming time button**
    Use this button for setting the programming start and/or stop time.
18. **Temperature setting button**
    Use this button for setting the desired temperature.
19. **Filter sign reset button**
    Refer to the operation manual of indoor unit.
20. **Fan speed control button**
    Press this button to select the fan speed of your preference.
21. **Operation mode selector button**
    Press this button to select the operation mode of your preference.
22. **Airflow direction adjust button**
23. **Thermistor**
    It sense the room temperature around the remote controller.
24. **These button are used when Heat Reclaim Ventilator is installed (These are optional accessories)**
    Refer to the operation manual of the ventilation unit.

NOTE

- In contradistinction to actual operating situations, the display on the figure above shows all possible indications.
- Above figure shows the remote controller which is opened the cover.
- If that particular function is not available, pressing the button may display the words "NOT AVAILABLE" for a few seconds. When running multiple units simultaneously the "NOT AVAILABLE" message will only be appear if none of the indoor units is equipped with the function. If even one unit is equipped with the function, the display will not appear.

C: 3P171361-1

Note:

- For FXS(Q), FXM(Q), FXL(Q) and FXN(Q), the airflow direction ajust button (22) is not available and the display (4) shows "NOT AVAILABLE" when pressed.

2.1.4 Installation Manual

■ **Remote Controller Mounting Instructions**

1. Remove the upper part of remote controller.

Insert minus screwdriver into the slots in the lower part of remote controller (2 places), and remove the upper part of remote controller.

The P C board is mounted in the upper part of remote controller. Be careful not to damage the board with the minus screwdriver.

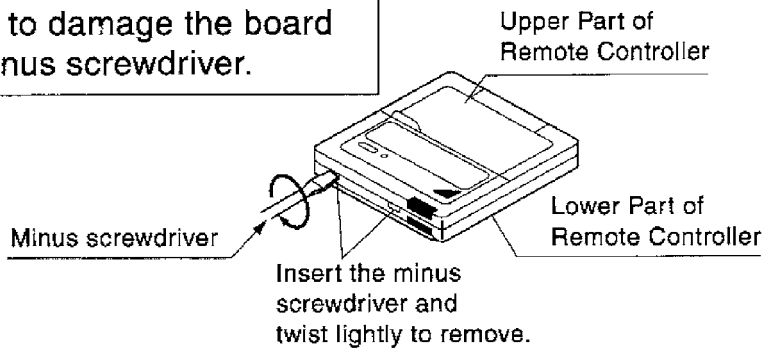

2. Fasten the remote controller.

①For exposed mounting, fasten with the included wood screws (2).

②For flush-mounting, fasten with the included machine screws (2).

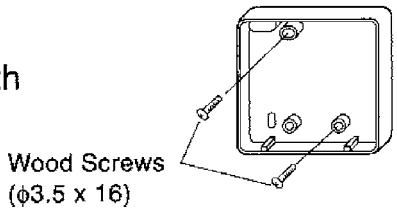

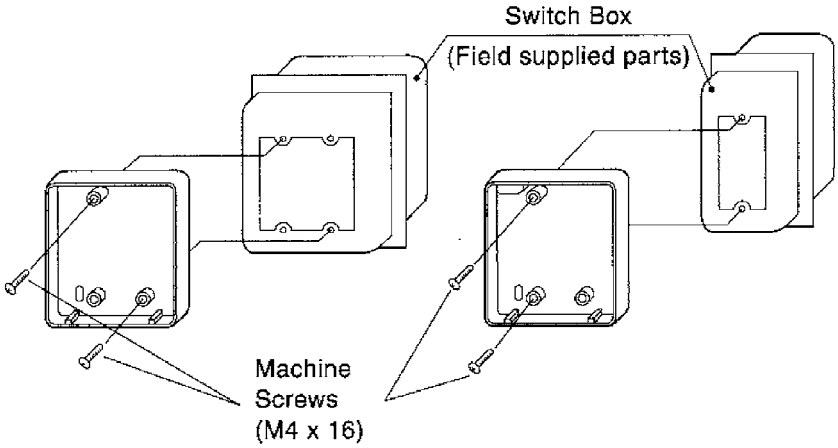

For the field supplied switch box, use optional accessories KJB111A or KJB211A.

NOTE

Choose the flattest place possible for the mounting surface. Be careful not to distort the shape of the lower part of remote controller by over-tightening the mounting screws.

2P068938A

3. Wire the indoor unit.

Connect the terminals on top of the upper part of remote controller (P1, P2), and the terminals of the indoor unit (P1, P2). (P1 and P2 do not have polarity.)

NOTE
When wiring, run the wiring away the power supply wiring in order to avoid receiving electric noise (external noise).

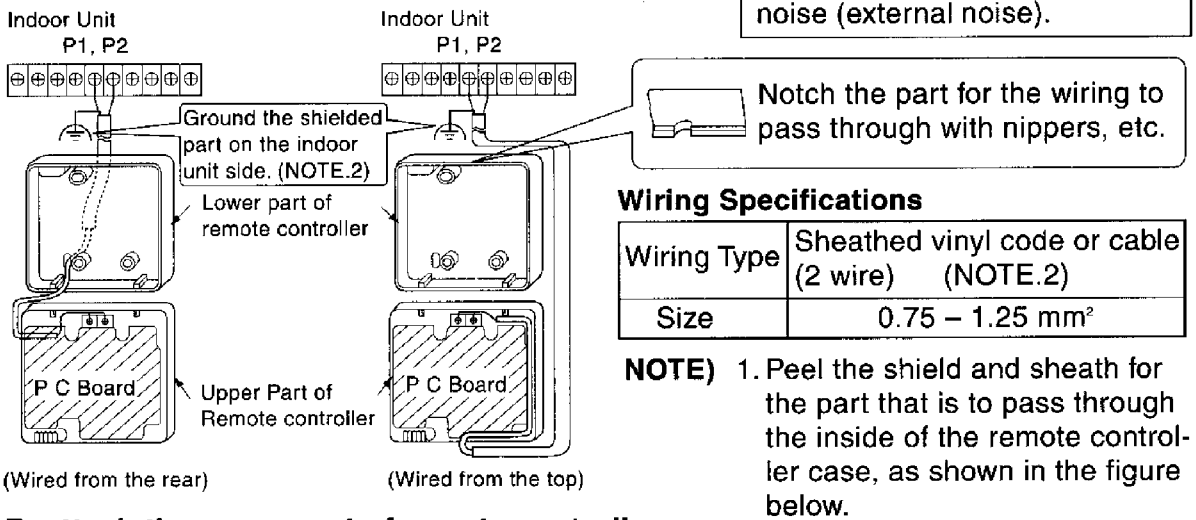

Wiring Specifications

Wiring Type	Sheathed vinyl code or cable (2 wire) (NOTE.2)
Size	0.75 – 1.25 mm²

NOTE) 1. Peel the shield and sheath for the part that is to pass through the inside of the remote controller case, as shown in the figure below.

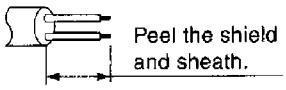

2. Shield wire (2 wire) can be used for remote controller wiring, but it must confirm to EMC (Electromagnetic Compatibility) (Australian regulation).

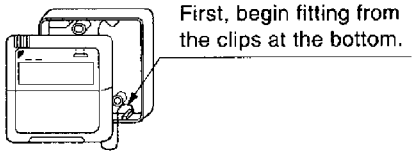

4. Reattach the upper part of remote controller.

Be careful not to pinch the wiring when attaching.

NOTE

1. The switch box and wiring for connection are not included.
2. Do not directly touch the PC board with your hand.

If controlling one indoor unit with two remote controllers

Change the MAIN/SUB changeover switch setting as described below.

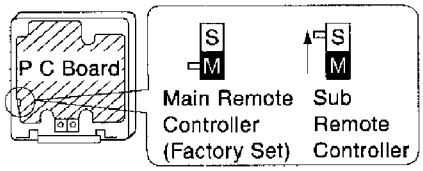

Set one remote controller to "main," and the other to "sub."

NOTE

- If controlling with one remote controller, be sure to set it to "main."
- Set the remote controller before turning power supply on.

" 88 " is displayed for about one minute when the power supply is turned on, and the remote controller cannot be operated in some cases.

2P068938A

■ Field Setting

(If optional accessories are mounted on the indoor unit, the indoor unit setting may have to be changed. Refer to the instruction manual for each optional accessory.)

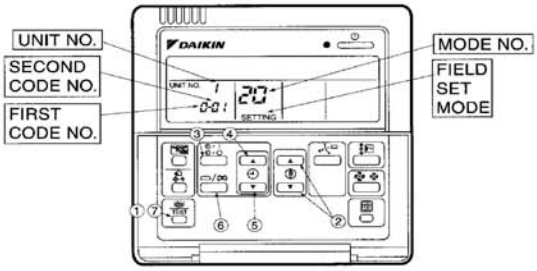

Procedure

①When in the normal mode, press the "TEST" button for a minimum of four seconds, and the FIELD SET MODE is entered.

②Select the desired MODE NO. with the "" button.

③During group control, when setting by each indoor unit (mode No. 20, 21 and 23 have been selected), push the "" button and select the INDOOR UNIT NO to be set. (This operation is unnecessary when setting by group.)

④Push the "" upper button and select FIRST CODE NO.

⑤Push the "" lower button and select the SECOND CODE NO.

⑥Push the "" button once and the present settings are SET.

⑦Push the "TEST" button for about one second to return to the NORMAL MODE.

(Example) If during group setting and the time to clean air filter is set to FILTER CONTAMINATION - HEAVY, SET MODE NO. to "10," FIRST CODE NO. to "0," and SECOND CODE NO. to "02."

Mode No. Note) 1	FIRST CODE NO.	Description of Setting		SECOND CODE No. Note) 2		
				01	02	03
10(20)	0	Filter Contamination - Heavy/Light (Setting for spacing time of display time to clean air filter) (Setting for when filter contamination is heavy, and spacing time to clean air filter is to be halved)	Ultra-long-life type	Light: Approx. 10,000 hours	Heavy: Approx. 5,000 hours	—
			Long-life type	Light: Approx. 2,500 hours	Heavy: Approx. 1,250 hours	
			Standard type	Light: Approx. 200 hours	Heavy: Approx. 100hours	
	1	Long-life filter type (Setting of filter sign indication time) (Change setting when Ultra-long-life filter is installed)		Long-life filter	Ultra-long-life filter (1)	—
	3	Spacing Time of Display Time to Clean Air Filter Count (Setting for when the filter sign is not to be displayed)		Display	Do Not Display	—
11(21)	0	Setting Number of Connected Skyair Simultaneous Operation System Indoor Units (Setting for Simultaneous Operation System)		Pair	Twin	—
13(23)	0	High Ceiling Setting (Setting for when installed in a Ceiling higher than 2.7m)		Normal	High Ceiling 1	High Ceiling 2
	1	Selection of Air Flow Direction (Setting for when a blocking pad kit has been installed)		F	T	W
	3	Air Flow Direction Adjust Function (To be set when decoration panel for air outlet is installed)		Equippeed	No Equippeed	—
	4	Air Flow Direction Range Setting		Upper	Normal	Lower
	6	Setting the External Static Pressure (Setting according to the connected duct resistance) (For FHYK, follow the High Ceiling Setting)		Normal (Normal)	High Static Pressure (High Ceiling)	Low Static Pressure —

Note:

1. Setting is carried out in the group mode, however, set the mode number inside the ( ) for individual setting of the each indoor unit or confirmation after setting.
2. The SECOND CODE number is set to "01" when shipped from the factory.
   However for the following cases it is set to "02".
   ●Air flow direction range setting.
3. Do not make any settings not given in the table above.
4. Not displayed if the indoor unit is not equipped with that function.
5. When returning to the normal mode, "88" may be displayed in the LCD in order for the remote controller to initialize itself.

2P068938A

3. Navigation Remote Controller (Wired Remote Controller)

3.1 BRC1E62

3.1.1 Features

BRC1E62

- Clear Display ..... Dot matrix display
  Backlight display
- Simple Operation ..... Large buttons and arrow keys
  Guide on display
- Energy Saving ..... Auto operation mode (2 setpoints)
  Setpoint range set
  Setpoint auto reset
  Off timer
- Convenient ..... 3 independent weekly schedules
  Setback
- Comfortable ..... Individual airflow direction (*1)
  Air direction range select (*1)
  Auto airflow rate (*1)

Note: *1. Available only for indoor models that have the corresponding function

3.1.2 Function

✓: Possible

Category	Function	BRC1E62
Basic Functions	Display	Dot matrix
	Operation method	Menu selection
	Backlight	✓
	Multilingual display	11 languages *1
Energy Saving Functions	Auto operation mode (Heat pump and Heat recovery)	2 setpoints Cooling/Heating
	Setpoint range set	✓
	Setpoint auto reset	✓
	Off timer	✓
Convenient Functions	Clock (time display)	✓
	Selectable display *3	✓
	Key lock	✓
	Weekly schedule	✓(3 patterns)
	Setback *4	✓
Comfortable Functions	Individual airflow direction *2	✓
	Air direction range select *2	✓
	Auto airflow rate *2	✓
	Sensing sensor *6	✓
Maintenance/After Sales Service	Model name display *2	✓
	Contact dealer display *5	✓

*1 English, German, French, Spanish, Italian, Portuguese, Greek, Dutch, Russian, Turkish and Polish. Polish is newly added.
*2 Available only for indoor models that have the corresponding function.
*3 Selectable from “Standard” or “Detailed”.
*4 “Setback”: available in both heating and cooling mode. More flexible setting than “Home leave”.
*5 The contact address must be registered when installed.
*6 Only available for some indoor units with sensing sensor.

3.1.3 Restrictions

1. In the case of two remote control system.

Due to the limited power supply capacity, there are some restrictions on two-remote-controller connection.

<Common restrictions on *VRV* and SkyAir>

- If two remote controllers are used to control a single indoor unit, the backlight of the remote controller that is operated first will be lit.

- Combination table

✓: Possible

		Main				
		Navigation remote controller		Wired remote controller	Wireless remote controller	Simplified remote controller
		New	Current	BRC1D61 BRC1C61 BRC1C62	BRC4* BRC7*	BRC2C51 BRC3A61
		BRC1E62	BRC1E61			
Sub	BRC1E62	✓				
	BRC1E61		✓			
	BRC1D61 BRC1C61 BRC1C62		✓	✓		
	BRC4* BRC7*			✓		
	BRC2C51 BRC3A61			✓		✓

- The following functions cannot be set in the sub remote controller. Set them in the main remote controller.
  - Individual airflow direction
  - Auto operation mode (2 setpoints, Cooling/Heating)
  - Energy saving options (Setpoint range set, Setback, Setpoint auto reset)
  - Schedule

<Restrictions for *VRV* only>

Only one of the following two items can be used in a two-remote-control system.

- Adaptors for wiring(KRP1*)
- A power supply connector (X18A or X35A) on the indoor Printed Circuit Board

2. In the case of Centralised remote controller connection.

When the centralized remote controller (*1) is connected together with the BRC1E62, the functions mentioned below cannot be set in the BRC1E62.

- Auto operation mode (2 setpoints, Cooling/Heating)
- Energy saving options (Setpoint range set, Setback, Setpoint auto reset)
- Schedule

Note: *1. This means all Centralized remote controllers.

intelligent Touch Manager [DCM601A51]	Central Remote Controller [DCS302CA61]
intelligent Touch Controller [DCS601C51]	Unified ON/OFF Controller [DCS301BA61]
intelligent Manager [DAM602B51, 52]	Schedule Timer [DST301BA61]
Interface for Use in LonWorks® [DMS504B51]	Residential Central Remote Controller [DCS303A51]
Interface for Use in BACnet® [DMS502B51]	Wiring adaptor for electrical appendices [KRP2A5* / KRP2A6*]

3.1.4 Dimensions

Unit (mm)

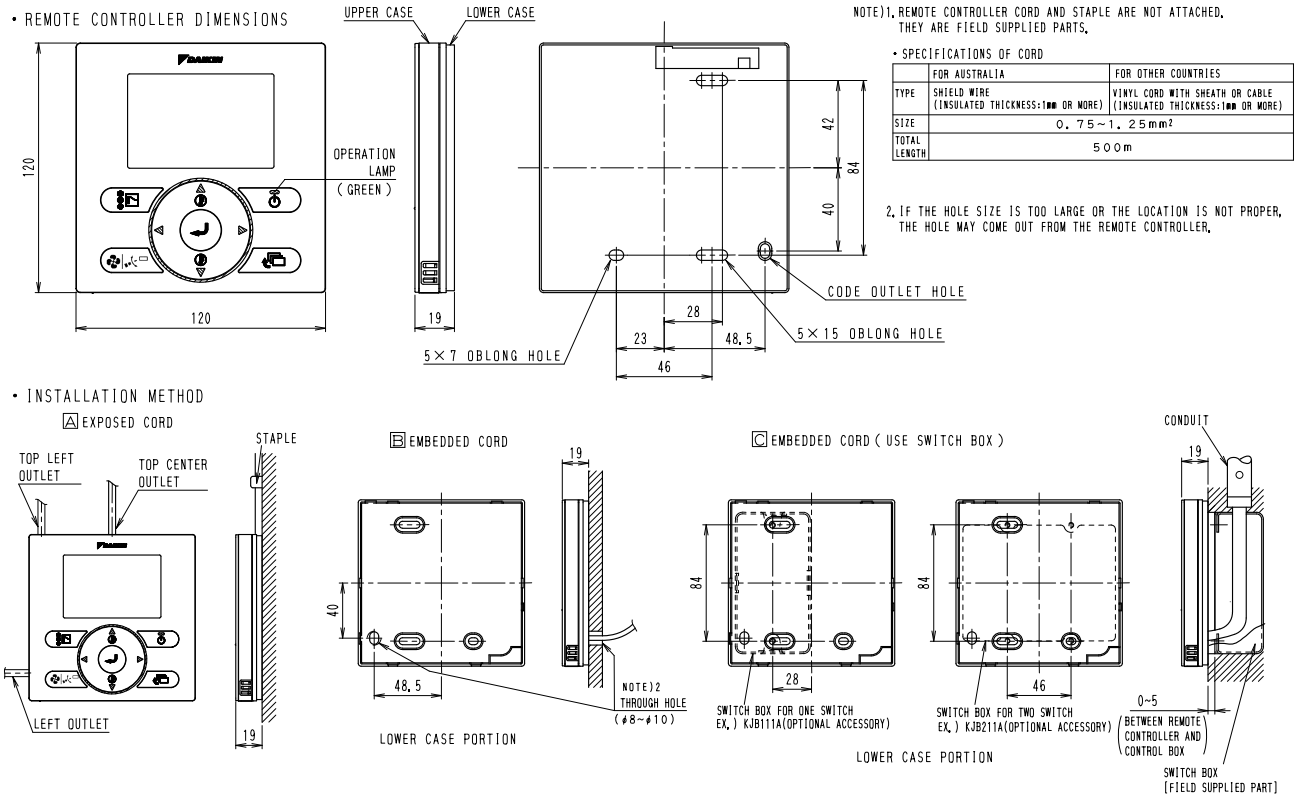

3D081567

3.1.5 Names and Functions

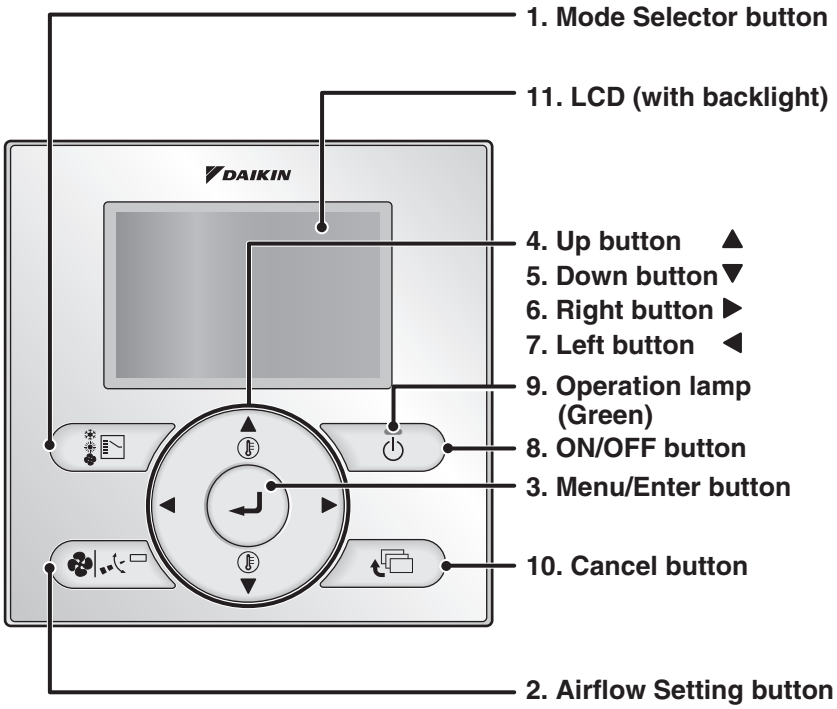

Basic operations (i.e., ON/OFF, Operation Mode, Airflow Rate (Air Volume/Fan Speed), Airflow Direction and Set Temperature) are manipulable directly by the above button. Advanced settings are manipulable from the Menu screen displayed by the Menu/Enter button.

NOTE

- **Do not press the buttons on the remote controller with a hard, pointed objects.**
  Otherwise, the remote controller may be damaged or malfunction.

1. Mode Selector button

- Use to select the operation mode of your preference.
  * Available modes vary with the connecting model.

2. Airflow Setting button

- Used to indicate the Airflow Rate (Air Volume/Fan Speed) / Airflow Direction screen.
  * Available fan speed and airflow direction vary with the connecting model.

3. Menu/Enter button

- Used to indicate the Main Menu.
- Used to enter the setting item selected.

4. Up button "▲"

- Used to raise the set temperature.
- Use to highlight the item above the current selection. (The highlighted items will be scrolled continuously when the button is kept pressed.)
- Used to change the item selected.
  * Be sure to press the part with the symbol "▲"

5. Down button "▼"

- Used to lower the set temperature.
- Use to highlight the item below the current selection. (The highlighted items will be scrolled continuously when the button is kept pressed.)
- Used to change the item selected.
  * Be sure to press the part with the symbol "▼"

6. Right button "▶"

- Used to highlight the next items on the right-hand side.
- Display contents are changed to next screen per page.
  * Be sure to press the part with the symbol "▶"

7. Left button "◀"

- Used to highlight the next items on the left-hand side.
- Display contents are changed to previous screen per page.
  * Be sure to press the part with the symbol "◀"

8. ON/OFF button

- Press this button and system will start.
- Press this button again and system will stop.

9. Operation lamp (Green)

- This lamp lights up during operation.
- This lamp blinks if a malfunction occurs.

10. Cancel button

- Used to return to the previous screen.

11. LCD (with backlight)

- The backlight will be lit for approximately 30 seconds by pressing any operation button. Press the button while the backlight is lit. (Excluding the ON/OFF button)
- If 2 remote controllers are used to control a single indoor unit, the backlight of the remote controller accessed first will be lit

C: 3P243520-4H

Basic Screen

- Basic screen are two types of Standard display screen and Detailed display screen. The Standard display screen is set by default.
- To switch to the Detailed display, select the "Detailed" in the Main Menu.
- The contents on the screen vary with the operation mode of the connecting model. (The following display will appear when the air conditioner is in Automatic operation.)

Standard display screen

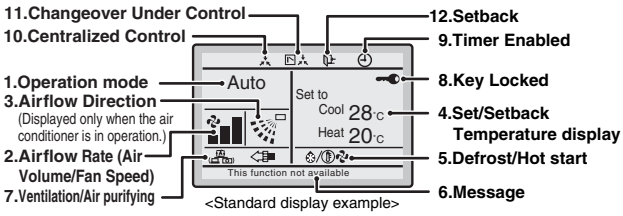

<Standard display example>

Detailed display screen

■ **The clock, and selectable display items appear on the detailed display screen in addition to the items appearing on the standard display screen.**

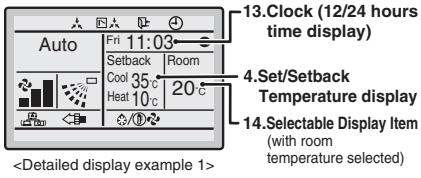

<Detailed display example 1>

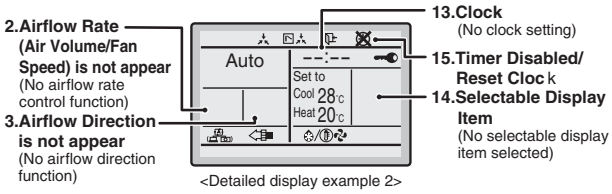

<Detailed display example 2>

1. Operation Mode

- Displays the present operation mode, "Cool", "Heat", "Vent", "Fan", "Dry" or "Auto".

2. Airflow Rate (Air Volume/Fan Speed)

- Displays the airflow rate that is set for the indoor unit.
- The airflow rate will not be displayed if the indoor unit does not have airflow rate control function.

3. Airflow Direction " "

- Displayed when the airflow direction and swing are set.
- This icon is not displayed if the indoor unit does not have a function to set airflow directions.

4. Set/Setback Temperature display

- When the air conditioner is turned on, "**Set to**" indicates the set temperatures that are set for the air conditioner.
- When the air conditioner is turned off, "**Setback**" indicates the setback temperatures that are set for the air conditioner.

5. Defrost/Hot start " "

Displays if the Defrost/Hot start operation is active.
If ventilating operation " " is displayed:

- Displayed when a Heat Reclaim Ventilator is connected. For details, refer to the Operation Manual of the Heat Reclaim Ventilator.

6. Message

The following messages are displayed.

"This function not available."

- Displayed for a few seconds when an operation button is pressed and the indoor unit does not have the corresponding function.
- If a number of indoor units are in operation, the message will appear only if none of the indoor units is provided with the corresponding function, i.e., the message will not appear if at least one of the indoor units is provided with the corresponding function.

"Error: Push Menu button"
"Warning: Push Menu button"

- Displayed if an error or warning is detected

"Quick Start" (Split system only)

- Displayed if the quick cooling/heating function is turned on.

"Time to clean filter"
"Time to clean element"
"Time to clean filter and element"

- Displayed when the time to clean the filter or element has come.

7. Ventilation/Air Purifying

- Displayed when a Heat Reclaim Ventilator is connected.
- **Ventilation Mode icon." "**
  These icons indicate the current ventilation mode (Heat Reclaim Ventilator only) (AUTOMATIC, ENERGY RECLAIM VENTILATION, BYPASS).
- **Air purifying icon " "**
  This icon indicates that the Air Purifying unit (optional accessory) is in operation.

8. Key Locked " "

- Displayed when the key lock is set.

9. Timer Enabled " "

- Displayed if the Schedule timer or OFF timer is enabled.

10. Centralized Control " "

- Displayed if the system is under the management of centralized control equipment (optional accessories) and the operation of the system through the remote controller is prohibited.

11. Changeover Under Control " "

(*VRV* only)

- Displayed if the remote controller has no cool/heat selection eligibility.

12. Setback " "

- The setback icon blinks when the air conditioner is turned on under the setback control.

13. Clock (12/24 hours time display)

- Displayed when the clock is set.
- If the clock is not set, " -- : -- " will be displayed.

14. Selectable Display Item

- Displayed when the detailed display is selected.
- No detailed items are selected by default.

15. Timer Disabled/Reset Clock " "

- Displayed when the clock needs to be reset.
- The schedule timer function will not work unless the clock is reset.

C: 3P243520-4H

1. Safety Precautions

■ Also refer to installation manual attached to the indoor unit.

Please read these "Safety Precautions" carefully before installing the remote controller.

- This manual classifies the precautions into WARNINGS and CAUTIONS.
  Be sure to follow all the precautions below: They are all important for ensuring safety.

⚠ **WARNING**	Indicates a potentially hazardous situation which, if not avoided, could result in death or serious injury.
⚠ **CAUTION**	Indicates a potentially hazardous situation which, if not avoided, may result in minor or moderate injury. It may also be used to alert against unsafe practices.

- After completing installation, conduct a test operation to check for faults and explain to the customer how to operate the remote controller and cleaning of it with the aid of the operation manual. Ask the customer to store the installation manual along with the operation manual for future reference.

⚠ WARNING
Ask your dealer or qualified personnel to carry out installation work. Do not attempt to install the remote controller yourself. Improper installation may result in electric shocks or a fire.
Consult your local dealer regarding relocation and reinstallation of the remote controller. Improper installation may result in electric shocks or a fire.
Install the remote controller in accordance with the instructions in this installation manual. Improper installation may result in electric shocks or a fire.
Be sure to use only the specified accessories and parts for installation work. Failure to use the specified parts may result in the remote controller falling down, electric shocks or a fire.
Install the remote controller on a foundation that can withstand its mass. Insufficient strength may result in the remote controller falling down and causing injury.
Make certain that all electrical work is carried out by qualified personnel according to the applicable legislation (note 1) and this installation manual, using a separate circuit. In addition, even if the wiring is short, make sure to use a wiring that has sufficient length and never connect additional wiring to make the length sufficient. Insufficient capacity of the power supply circuit or improper electrical construction may lead to electric shocks or a fire. (note 1) applicable legislation means “All international, national and local directives, laws, regulations and/or codes which are relevant and applicable for a certain product or domain”.
Turn off the power before performing installation work. Touch with live parts may cause electric shocks.
Do not disassembly, reconstruct or repair. Electric shock or a fire may cause.
Make sure that all wiring is secured, using the specified wirings and ensuring that external forces do not act on the terminal connections or wirings. Improper connections or fixing may cause an overheat or a fire.
The choice of materials and installations must comply with the applicable national and international standards.

⚠ CAUTION
To avoid electric shocks due to entry of water or insects, fill the wiring through hole with putty.
Do not operate with wet hands to avoid electric shocks.
Do not wash the remote controller with water. It may result in electric shocks or a fire.
Install the air conditioner, power supply wiring, remote controller wiring and transmission wiring at least 1 meter away from televisions or radios to prevent image interference or noise. (Depending on the radio waves, a distance of 1 meter may not be sufficient to eliminate the noise.)
Do not install the remote controller in the following locations: 1. Where there is oil mist, oil spray or vapour for example a kitchen. Resin parts may deteriorate and fall off. 2. Where corrosive gas, such as sulfurous acid gas, is produced. 3. Where there is machinery which emits electromagnetic waves. Electromagnetic waves may disturb the control system, and cause a malfunction of the equipment. 4. Where flammable gas may leak, where there is carbon fibre or ignitable dust suspensions in the air, or where volatile flammables such as thinner or gasoline are handled. Operating the unit in such conditions may result in a fire. 5. High temperature area or directly flamed point. It may cause an overheat or a fire. 6. Moist area, or place where may be exposed to water. If water enters inside of the remote controller, electrical components may fail. It may result in electric shocks or a fire.
When remote controller’s thermostat sensor is used, select the installation location considering the followings. ● A place where average temperature in the room can be detected. ● A place where is not exposed to direct sunlight. ● A place where is far apart from heat source. ● A place where is not affected by outdoor air due to door opening/closing or the like.

2. Accessories

The following accessories are included.

Wood screw	Small screw	Clamp	Operation manual	Installation manual	Wiring retainer
(M3.5×16)	(M4×16)				
(2 pcs.)	(2 pcs.)	(1 pc.)	(1 pc.)	(1 pc.)	(1 pc.)

3. Remote controller installation procedure

3-1 Determine where to install the remote controller.

Make sure to follow "**1. Safety Precautions**" when determining the location.

3-2 Make a wiring through hole on the wall if the wires are taken out from the back side.

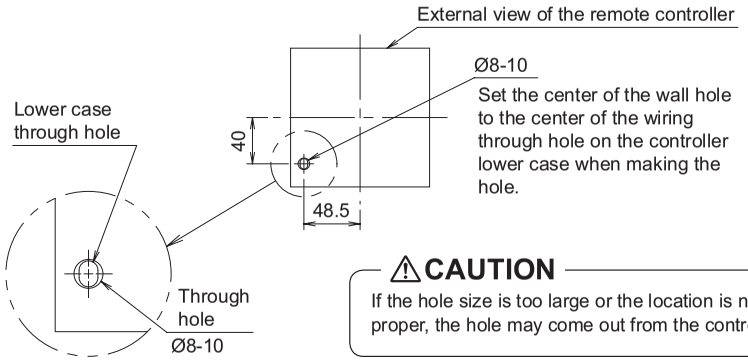

⚠CAUTION

If the hole size is too large or the location is not proper, the hole may come out from the controller.

3-3 Remove upper case.

Insert a screwdriver in the recess of lower case to remove the upper case (2 points).

Remote controller Printed Circuit Board is installed on the upper case. Take care not to damage the Printed Circuit Board with the screwdriver.

Take care that dust or moisture does not touch the Printed Circuit Board.

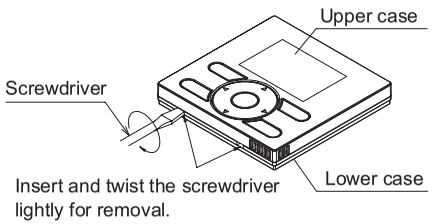

3-4 Determine the direction of controller wiring outlet (back outlet, left outlet, top left outlet, top center outlet).

3-4-1 Back outlet

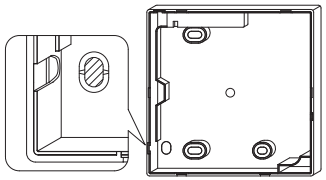

Cut off resin area (hatched area).

3-4-2 Left outlet

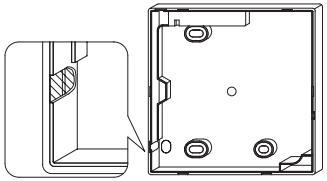

Cut off thin area (hatched area) with nippers or the like, and then remove burr with a file or the like.

3-4-3 Top left outlet

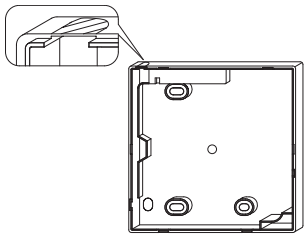

Cut off thin area (hatched area) with nippers or the like, and then remove burr with a file or the like.

3-4-4 Top center outlet

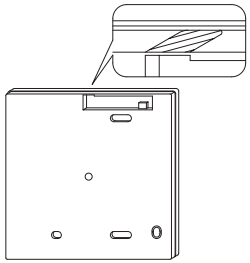

Cut off thin area (hatched area) with nippers or the like, and then remove burr with a file or the like.

3-5 Conduct wiring.

⚠CAUTION

1. Switch box and transmission wiring are not attached.
2. Do not directly touch the Printed Circuit Board.

Wiring Specifications

Wiring Type	Sheathed vinyl cord or cable (2 cores) (∗1)
Wiring Size	0.75~1.25 mm^2
Wiring Length	Max. 500m (∗2)

∗1. Some countries may require a shielded wiring.
Refer to Installation manual attached to the indoor unit.
∗2. This will be the total extended length in the system when doing group control.

Prepare the wiring for connection to the remote controller following these instructions.

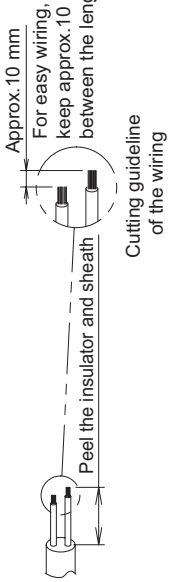

Sheath stripping length:
- Approx.150 mm for top left outlet
- Approx.200 mm for top center outlet

Connect the terminals (P/P1, N/P2) of the remote controller to the terminals (P1, P2) of the indoor unit. (P1 and P2 have no polarities.)

3-5-1 Back outlet

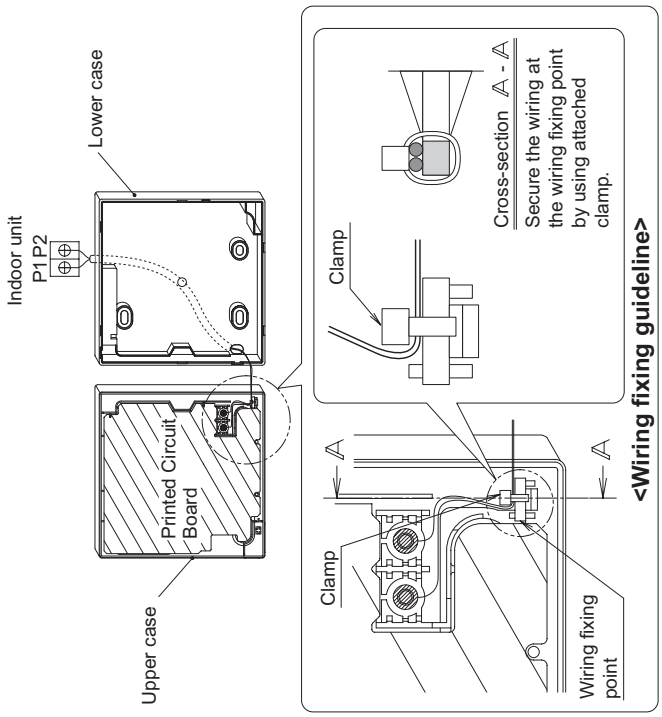

3-5-2 Left outlet

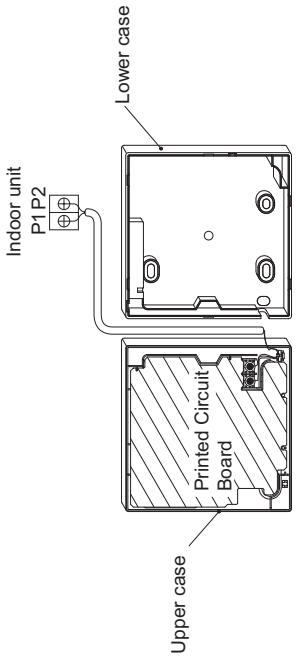

3-5-3 Top left outlet

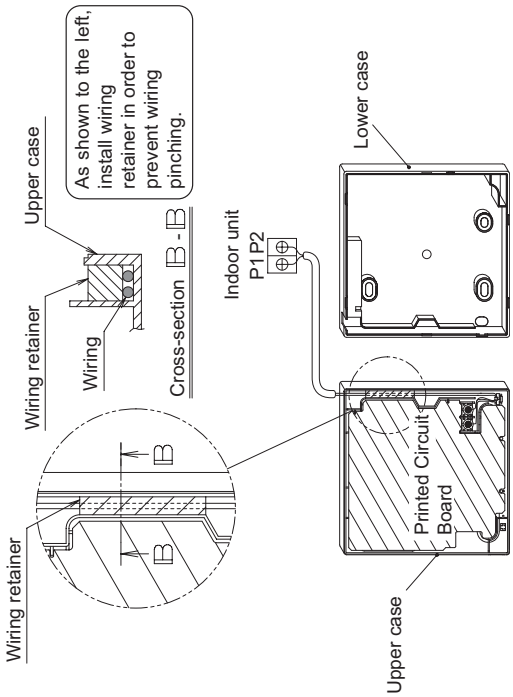

3-5-4 Top center outlet

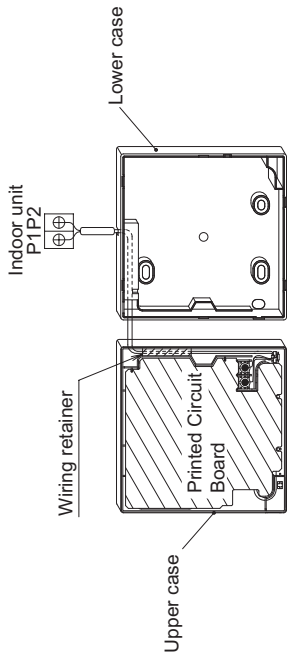

3P243521-4E

⚠ CAUTION

- Perform the wiring apart from a power line not to receive electrical noise (external noise).
- Seal the wiring outlet hole securely with putty (field supply) to prevent entry of insects or the like.

3-6 Fixing procedure of lower case.

In case of wiring a remote controller through top center outlet or back outlet, perform wiring through the outlet hole in the lower case before it is wall install.

3-6-1 In the case of installation on the wall

Secure by using attached wood screws (2 pcs.).

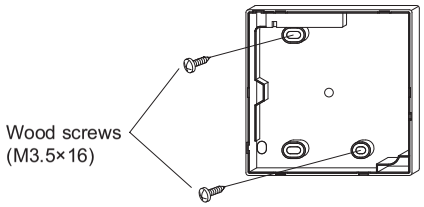

3-6-2 In the case of installation on the switch box

Secure by using attached small screws (2 pcs.).

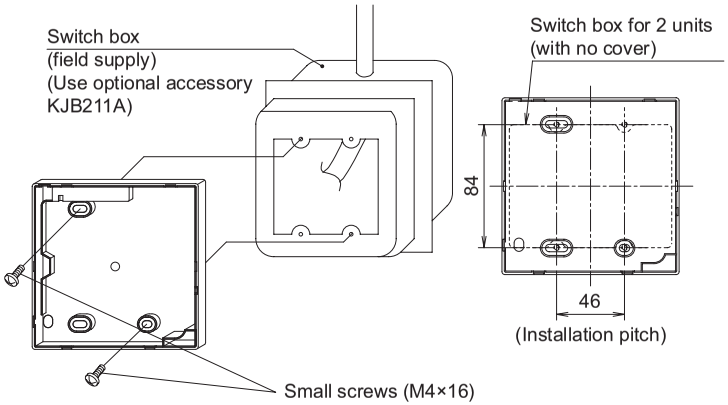

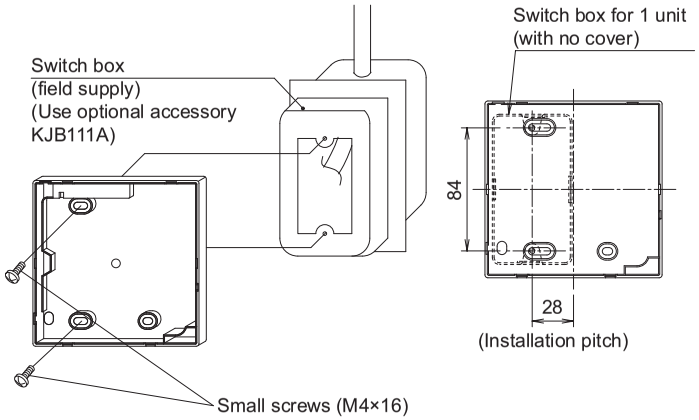

⚠ CAUTION

- Select flat place for installation face as possible.
- And, do not tighten the installation screws too much not to deform the lower case.

3-7 Install the upper case as original condition.

- Align the upper case with tabs of the lower case (6 points), inset and install the upper case.
- Install the wiring with care to prevent pinching.
- Peel off a protective seal which is attached on the upper case.

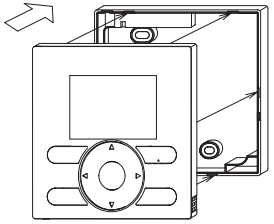

4. Functions and menu items of remote controller buttons

4-1 Functions and menu items

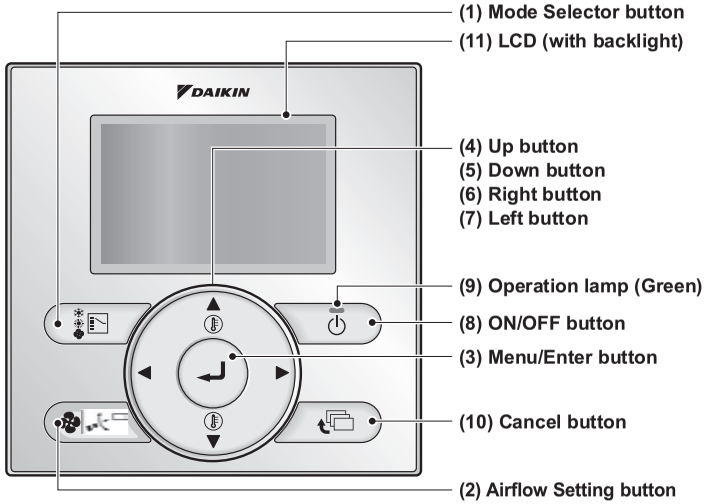

(1) Mode Selector button
Used to select the operation mode.

(2) Airflow Setting button
Used to indicate the Airflow Rate (Air Volume/Fan Speed)/Airflow Direction screen.

(3) Menu/Enter button
- Used to indicate the Main menu. (For details of Main menu, refer to the operation manual.)
- Used to enter the setting item selected.

Main menu

Air Flow Direction
Quick Start
Ventilation
Energy Saving Options
Schedule
Filter Auto Clean
Maintenance Information
Configuration
Current Settings
Clock & Calendar
Language

*Depending on connected model

(4) Up button " ▲ "
- Used to raise the set temperature.
- Use to highlight the item above the current selection. (The highlighted items will be scrolled continuously when the button is kept pressed.)
- Used to change the item selected.

(5) Down button " ▼ "
- Used to lower the set temperature.
- Use to highlight the item below the current selection. (The highlighted items will be scrolled continuously when the button is kept pressed.)
- Used to change the item selected.

(6) Right button " ▶ "
- Used to highlight the next items on the right-hand side.
- Display contents are changed to next screen per page.

(7) Left button " ◀ "
- Used to highlight the next items on the left-hand side.
- Display contents are changed to previous screen per page.

(8) ON/OFF button
- Press this button and system will start.
- Press this button again and system will stop.

(9) Operation lamp (Green)
This lamp lights up during operation. The lamp blinks if a malfunction occurs.

(10) Cancel button
- Used to return to the previous screen.
- Press and hold this button for 4 seconds or longer to display Service Settings menu.

(11) LCD (with backlight)
The backlight will be lit for approximately 30 seconds by pressing any operation button.

Service Settings menu

Test Operation
Maintenance Contact
Field Settings
Min Setpoints Differential
Group Address
Indoor unit AirNet Address
Outdoor unit AirNet Address
Error History
Indoor Unit Status
Outdoor Unit Status
Forced Fan ON
Switch Main Sub Controller
Filter Indicator
Test Filter Auto Clean
Brush/Filter Ind.
Disable Filter Auto Clean

*Depending on connected model

⚠ CAUTION

- Operate the button during backlight lit. However, ON/OFF may be operated concurrently with backlight lit.
- When 1 indoor unit is controlled by 2 remote controllers, the backlight of remote controller which is operated first is lit.
- To operate Up/Down/Left/Right button, be sure to press the part with symbol " ▲ ", " ▼ ", " ◀ ", or " ▶ ".

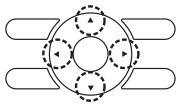

4-2 Displays for button operation descriptions

<Service Settings menu screen>

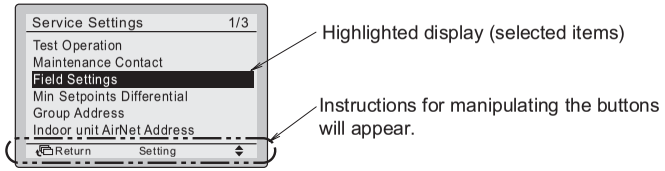

5. Power-on

- Check for completion of indoor/outdoor units wiring.
- Check for closing of control box lid of indoor and outdoor units before turn on the power.

5-1 Followings is displayed after turn on the power.
"Checking the connection.
Please stand by."

During above display, backlight does not light by button operation.

When 1 indoor unit is controlled by 2 remote controllers:

Be sure to set sub remote controller during above display. Press and hold for 4 seconds or longer the Mode Selector button of the remote controller to be set. When the display is changed from main remote controller to sub remote controller, the setting is completed.

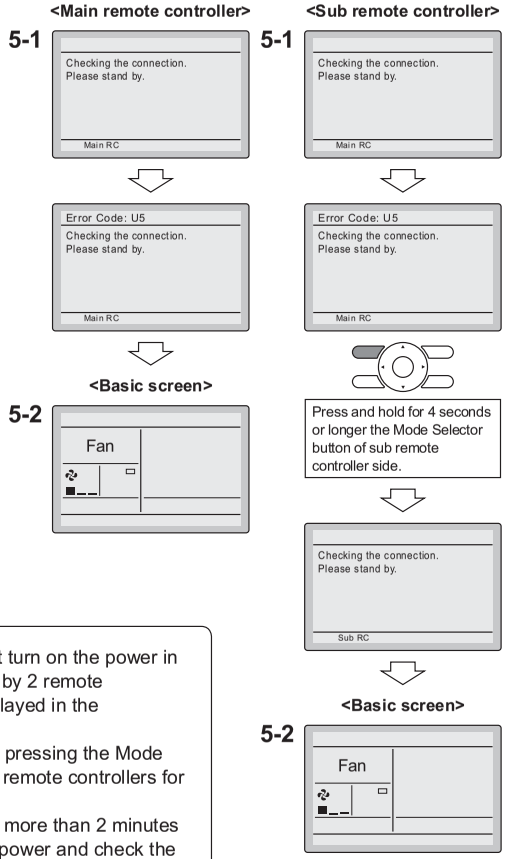

5-2 Basic screen is displayed.

⚠ CAUTION

If sub remote controller is not set at turn on the power in the case of 1 indoor unit controlled by 2 remote controllers, "Error code: U5" is displayed in the connection checking screen.
Select the sub remote controller by pressing the Mode Selector button of either one of the remote controllers for 4 seconds or longer.
If the Basic screen is not displayed more than 2 minutes after "Sub RC" display, turn off the power and check the wiring.

NOTE

When selecting a different language, refer to **"12. Language"** on page 23.

6. Field settings

6-1 Press and hold the Cancel button for 4 seconds or longer.
Service Settings menu is displayed.

6-2 Select **Field settings** in the Service Settings menu, and press Menu/Enter button.
Field settings screen is displayed.

6-3 Highlight the Mode No., and select desired "Mode No." by using " ▼▲ " (Down/Up) button.
For the commonly-used field setting item, refer to page 14 and 15.

6-4 In the case of setting per indoor unit during group control (When Mode No. such as **20** , **21** , **22** , **23** , **25** are selected), highlight the Unit No. and select "Indoor unit No." to be set by using " ▼▲ " (Down/Up) button.
(In the case of group setting, this operation is not needed.)

In the case of individual setting per indoor unit, current settings are displayed. And, SECOND CODE NO. " - " means no function.

6-5 Highlight SECOND CODE NO. of the FIRST CODE NO. to be changed, and select desired "SECOND CODE NO." by using " ▼▲ " (Down/Up) button.
Multiple identical mode number settings are available.

In the case of group setting, all of SECOND CODE NO. which may be set are displayed as " ∗ ".
" ∗ " is changed to SECOND CODE NO. to be set.
And, SECOND CODE NO. " - " means no function.

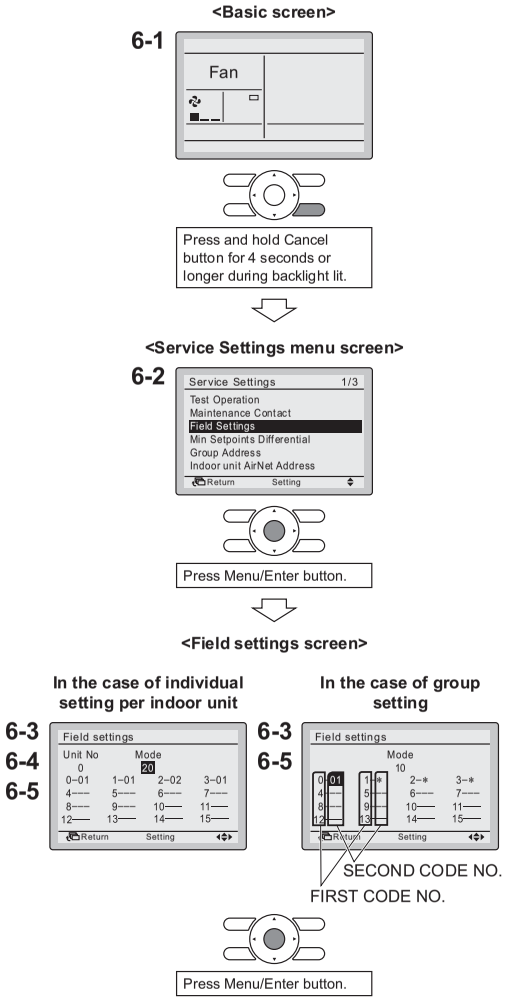

6-6 Press Menu/Enter button. Setting confirmation screen is displayed.

6-7 Select **Yes** and press Menu/Enter button. Setting details are saved and Field settings screen returns.

6-8 In the case of multiple setting changes, repeat "**6-3**" to "**6-7**".

6-9 After all setting changes are completed, press Cancel button twice.

6-10 Backlight goes out, and "Checking the connection. Please stand by." is displayed during initialization. After the initialization, the Basic screen returns.

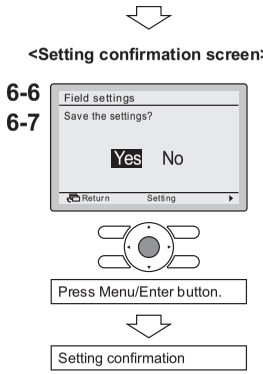

⚠ CAUTION

- When an optional accessory is installed on the indoor unit, settings of the indoor unit may be changed. Refer to the manual of the optional accessory.
- For field setting details of the outdoor unit, refer to Installation manual attached to the outdoor unit.

Mode No. Note) 1	FIRST CODE NO.	Description of setting		SECOND CODE NO. Note) 2					
				01		02		03	04
10 (20)	0	Filter Contamination - Heavy/Light (Setting for spacing time of display time to clean air filter) (Setting for when filter contamination is heavy, and spacing time of display time to clean air filter is to be halved)	Ultra-long-life filter	Light	Approx. 10.000 hrs.	Heavy	Approx. 5.000 hrs.	—	—
			Long-life filter		Approx. 2.500 hrs.		Approx. 1.250 hrs.		
			Standard filter		Approx. 200 hrs.		Approx. 100 hrs.		
	1	Long-life filter type (Setting of filter sign indication time). (Change setting when Ultra-long-life filter is installed)		Long-life filter		Ultra-long-life filter		—	—
	2	Thermostat sensor in remote controller		Use		Not use		—	—
	3	Spacing time of display time to clean air filter count (Setting for when the filter sign is not to be displayed)		Display		Do not display		—	—
11 (21)	0	Setting number of connected SPLIT system simultaneous operation system indoor units (Setting for simultaneous operations system)		Pair		Twin		Triple	Double twin

Mode No. Note) 1	FIRST CODE NO.	Description of setting	SECOND CODE NO. Note) 2			
			01	02	03	04
12 (22)	1	ON/OFF input from outside (Setting for when forced ON/OFF is to be operated from outside).	Forced OFF	ON/OFF operation	—	—
	2	Thermostat differential changeover (Setting for when using remote sensor).	1°C	0.5°C	—	—
13 (23)	0	High ceilling setting (Setting for when installed in ceilling higher than 2.7m). *Height depends on the connection model. Refer to the installation manual attached to the indoor unit to be connected for details.	≤2.7m *	2.7m<, ≤3.0m *	3.0m<, ≤3.5m *	—
	1	Selection of airflow direction (Setting for when a sealing pad of air discharge outlet has been installed).	4-way air discharge	3-way air discharge	2-way air discharge	—
	3	Selection of airflow function (Setting for when using a decoration panel for outlet).	Equipped	Not equipped	—	—
	4	Airflow direction range setting.	Upper	Normal	Lower	—
	6	Setting the external static pressure (Setting according to the connected duct resistance)	Normal	High static pressure	Low static pressure	—
		For FHYK	Normal	High ceiling	—	—
15 (25)	3	Drain pump operation with humidifying.	Equipped	Not equipped	—	—
1c	1	Thermostat sensor in remote controller (For Auto mode and Setback function only)	Not use	Use	—	—
1e	2	Setback function	Not use	Heating only	Cooling only	Cooling and Heating

Notes)

1. Though setting is performed totally in the group, set Mode No. in the parenthesis when individual setting per indoor unit or checking after the setting should be performed.
2. SECOND CODE NO. at factory shipment is set to "01".
   However for the following cases it is not "01".
   - Airflow direction range setting (except Round flow cassette)…"02"
   - Thermostat sensor in remote controller (SPLIT system only)…"02"
   - Thermostat sensor in remote controller for auto mode and Setback function only…"02"
   - Setback function…"04"
3. Any function which the indoor unit does not have is not displayed.

7. Test operation method (in the case of SPLIT system)

∗ In the case of VRV system, refer to the manual attached to the outdoor unit.

Also refer to installation manuals attached to the indoor unit and the outdoor unit.

- Check that wiring work of the indoor unit and the outdoor unit is completed.
- Check that control box lid of the indoor unit and the outer panel and piping cover of the outdoor unit are closed.
- After refrigerant piping, drain piping and electric wiring are completed, clean the inside of the indoor unit and decoration panel.
- Perform the test operation according to following procedure.

7-1 To protect the compressor, turn on the power to the outdoor unit at least 6 hours prior to test operation.

7-2 Confirm that stop valves of both liquid side and gas side are opened.
<Make sure that outer panel and piping cover are closed before operation (danger of electric shock). >
∗ After air purge by vacuum pump, refrigerant pressure may not rise even though the stop valve is opened. The reason is that refrigerant system of the outdoor unit is blocked by electric expansion valve or the like. Operation is no problem.

7-3 Press Mode Selector button to select Cool mode.

7-4 Press and hold Cancel button for 4 seconds or longer. Service Settings menu is displayed.

7-5 Select **Test Operation** in the Service Settings menu, and press Menu/Enter button. Basic screen returns and "Test Operation" is displayed.

Notes for backlight

- The backlight will be lit for approximately 30 seconds by pressing any operation button.
- Operate the buttons during the backlight lit. However, ON/OFF can be operated concurrently with the backlight lit.

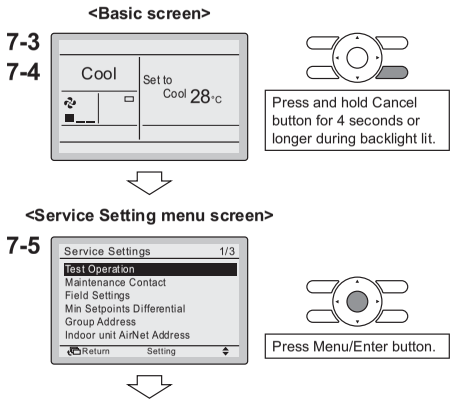

7-6 Press ON/OFF button within about 10 seconds. The test operation starts. Check operation condition for 3 minutes.
∗ Note) In the case of above-mentioned procedures 7-5 and 7-6 in reverse order, test operation can start as well.

7-7 Press Airflow Setting button.

7-8 Select airflow direction setting by pressing the " ▶ " button on the setting screen.
Use the " ▼▲ " buttons to change the airflow direction.

7-9 After the operation of airflow direction is confirmed, press Menu/Enter button. Basic screen returns.

7-10 Press and hold Cancel button for 4 seconds or longer in the Basic screen.
Service Settings menu is displayed.

7-11 Select **Test Operation** in the Service Settings menu, and press Menu/Enter button. Basic screen returns and normal operation is conducted.
∗Note) Test operation will automatically finish in 30 minutes.

7-12 Check the functions according to the operation manual.

7-13 When the decoration panel is not installed, turn off the power after the test operation finishes.

- If the interior finish work is not completed when the test operation is finished, for protection of the air conditioner ask the customer not to operate the air conditioner until the interior finish work is completed. If the air conditioner is operated, the inside of the indoor units may be polluted by substances generated from the coating and adhensives used for the interior finish work and cause water splash and leakage.

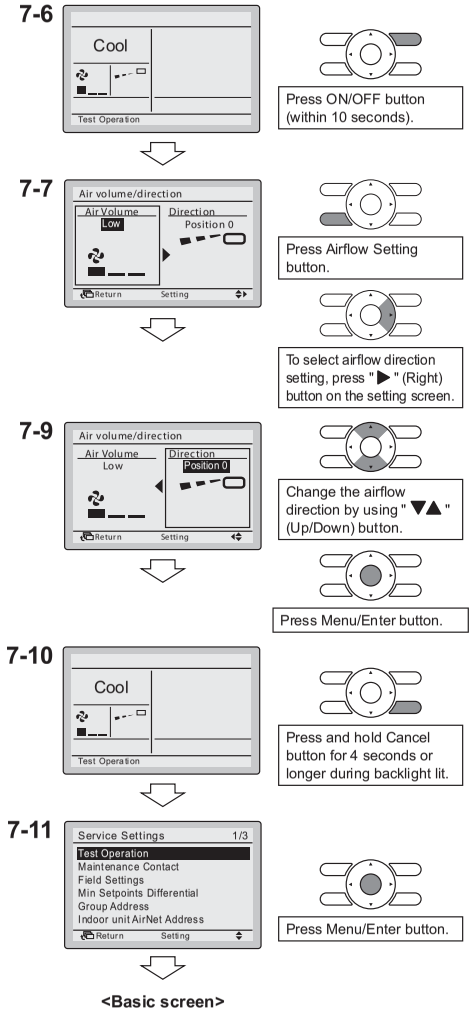

⚠CAUTION

- If operation is not available due to any malfunction, refer to following **Malfunction diagnosis method** .
- After the test operation finishes, check that malfunction (error) code history is not displayed in the Maintenance Information screen of the Main menu according to the following procedure.

7-14 Press Menu/Enter button in the Basic screen. Main menu screen is displayed.

7-15 Select **Maintenance Information** in the Main menu, and press Menu/Enter button.

7-16 Maintenance Information screen is displayed. Check that malfunction (error) code history is not displayed in the screen.
∗ If no malfunction (error) code history is displayed following this procedure the system has normally completed the test operation.

7-17 If the malfunction (error) code history is displayed, conduct the failure diagnosis referring to <Malfunction code list> in the installation manual of the indoor unit.
After the failure diagnosis finishes, press and hold ON/OFF button for 4 seconds or longer in the "Maintenance Information" screen to erase the malfunction (error) code history.

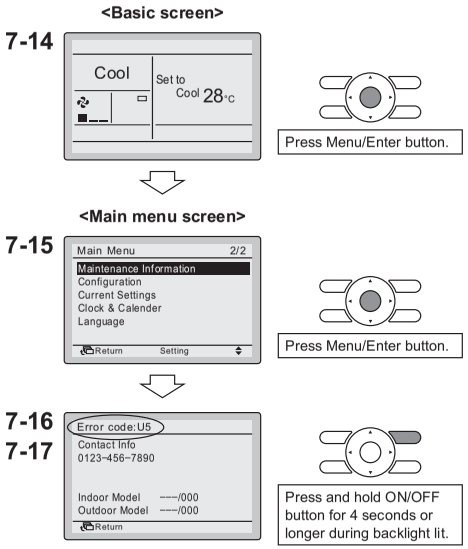

Malfunction diagnosis method

- When the remote controller displays any item in following table, inspect the details in the table.
- If a malfunction (error) occurs, "code" is displayed.
  Conduct the failure analysis referring to "Malfunction code list" in the installation manual of the indoor unit.
  And when the unit No. which detected the malfunction (error) during group control is confirmed, refer to "**8. Checking procedure of Malfunction (Error) History**".

Remote controller display	Description
No display	● Power outage, power voltage failure or open-phase ● Wrong wiring (between indoor and outdoor units) ● Indoor Printed Circuit Board assembly failure ● Remote controller wiring disconnection ● Remote controller failure ● Fuse blown (outdoor unit)
Display of "Checking the connection. Please stand by." is turned on. ∗	● Indoor Printed Circuit Board assembly failure ● Wrong wiring (between indoor and outdoor units)

∗ Though "Checking the connection. Please stand by." is displayed for 90 seconds at maximum after turn on the power supply, this does not mean a malfunction. (Determine after 90 seconds.)

8. Checking procedure of Malfunction (Error) History

8-1 Press and hold Cancel button for 4 seconds or longer in the Basic screen. Service Settings menu is displayed.

8-2 Select **Error History** in the Service Settings menu, and press Menu/Enter button. The Error History menu screen is displayed.

8-3 Select **RC Error History** in the Error History menu, and press Menu/Enter button.
Malfunction (Error) codes and Unit No. can be confirmed in the RC Error History screen.

8-4 In the Malfunction (Error) History, 10 items from the latest are displayed in order.

8-5 Press Cancel button in the RC Error History screen 3 times.
The Basic screen returns.

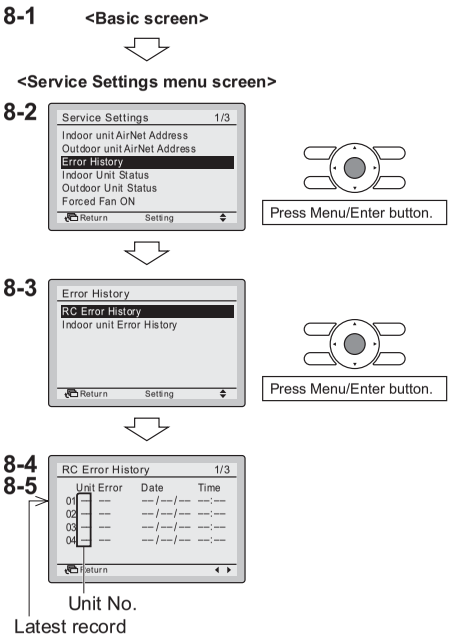

9. Registration method of the Maintenance Contact

● Registration of the service contact.

9-1 Press and hold Cancel button for 4 seconds or longer in the Basic screen.
Service Settings menu is displayed.

9-2 Select **Maintenance Contact** in the Service Settings menu, and press Menu/Enter button. Maintenance Contact menu screen is displayed.

9-3 Select **Maintenance Contact**, and press Menu/Enter button.

9-4 Enter the telephone number.
Numeric varies by using " ▼▲ " (Down/Up) button. Enter from the left end, and blank digit should be left as " - ".

9-5 Press Menu/Enter button.
Setting confirmation screen is displayed.

9-6 Select **Yes** and press Menu/Enter button.
Setting details are determined and Service Settings menu screen returns.

9-7 Press Cancel button once.
The Basic screen returns.

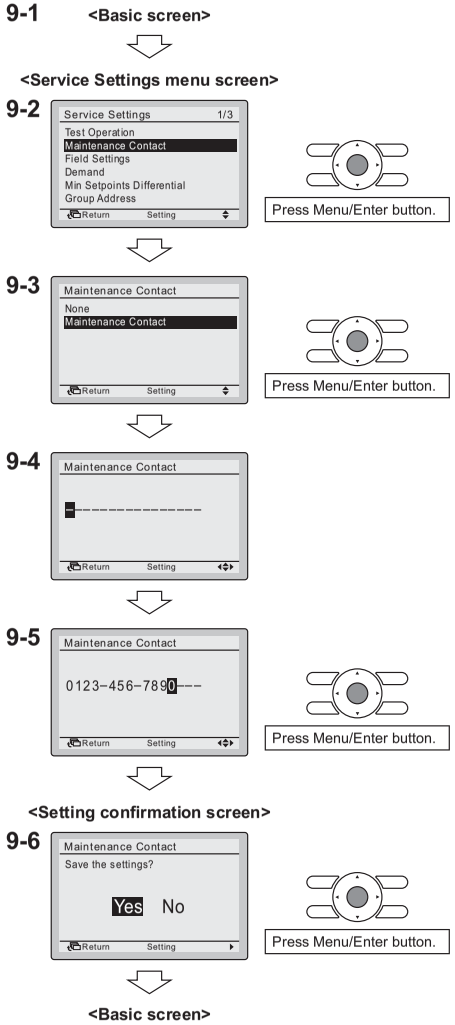

10. Confirmation of registered details

10-1 Press Menu/Enter button in the Basic screen.
Main menu is displayed.
Select **Maintenance Information** in the Main menu, and press Menu/Enter button.

10-2 Press Cancel button twice.
The Basic screen returns.

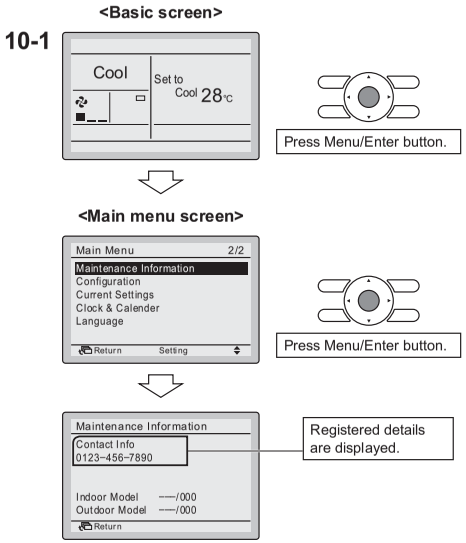

11. Clock & Calendar

11-1 Press Menu/Enter button in the Basic screen.
Main menu is displayed.
Select **Clock & Calendar** in the Main menu, press Menu/Enter button.

11-2 Press " ▼▲ " buttons to select **Date & Time** on the Clock & Calendar screen.
∗ The Date & Time screen will appear when the Menu/Enter button is pressed.

11-3 Select "Year", "Month", "Day" and time by using " ◀▶ " (Left/Right) button and set by using " ▼▲ " (Down/Up) button in the Date & Time screen.
Press and hold the button for continuous change of the numeric value.
∗ Day of the week is set automatically.

11-4 Press Menu/Enter button.
Setting confirmation screen is displayed.

11-5 Select **Yes** and press Menu/Enter button.
Setting details are confirmed and Basic screen returns.

∗ If duration of power outage exceeds 48 hours, reset is needed.

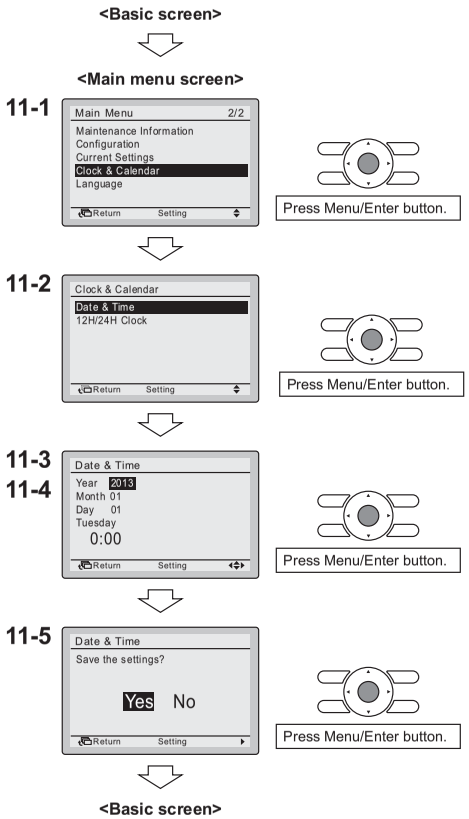

12. Language

12-1 Press Menu/Enter button in the Basic screen.
Main menu is displayed.
Select **Language** in the Main menu, press Menu/Enter button.

12-2 Press " ▼▲ " (Down/Up) buttons to select "Language" on the Language screen.
English/Deutsch/Français/Italiano/Español/Português/Nederlands/русский/Ελληνικά/Türkçe/Polski
Press Menu/Enter button.
Setting details are confirmed and Basic screen returns.

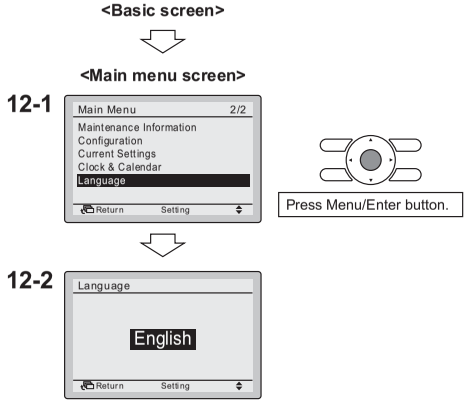

13. Prohibit buttons

- Restriction of the number of operable buttons.

13-1 Press Menu/Enter button in the Basic screen.
Main menu is displayed.
Normally, "Lock function" is not shown in Main menu.
Press Menu/Enter button for 4 seconds to display the "Lock function".

13-2 Select **Lock function** in the Main menu, press Menu/Enter button.

13-3 Select **Prohibit Buttons** in the menu, press Menu/Enter button.

13-4 Select "Up/Down/L/R", "ON/OFF", "Mode", Fan Speed" by using " ◀▶ " (Left/Right) button and set by using " ▼▲ " (Down/Up) button.

13-5 Press Menu/Enter button.
Setting confirmation screen is displayed.

13-6 Select **Yes** and press Menu/Enter button.
Setting details are confirmed and Basic screen returns.

If you want to restrict the number of operable buttons on the remote controller to be defined as "sub", start with only connecting this controller to the unit. Make sure that this controller is set to "main" (factory set) first, change the restrictions to the setting you prefer and only then set the remote controller to "sub".

13-7 To lock menu button in Basic screen, proceed as follows:
1. Keep the " ▶ " button pressed.
2. Press the 3 other indicated keys simultaneously while keeping the " ▶ " button pressed.

To unlock menu button in Basic screen, follow the same procedure.

NOTE: When pressing a prohibit buttons, the " 🔑 " will be displayed.

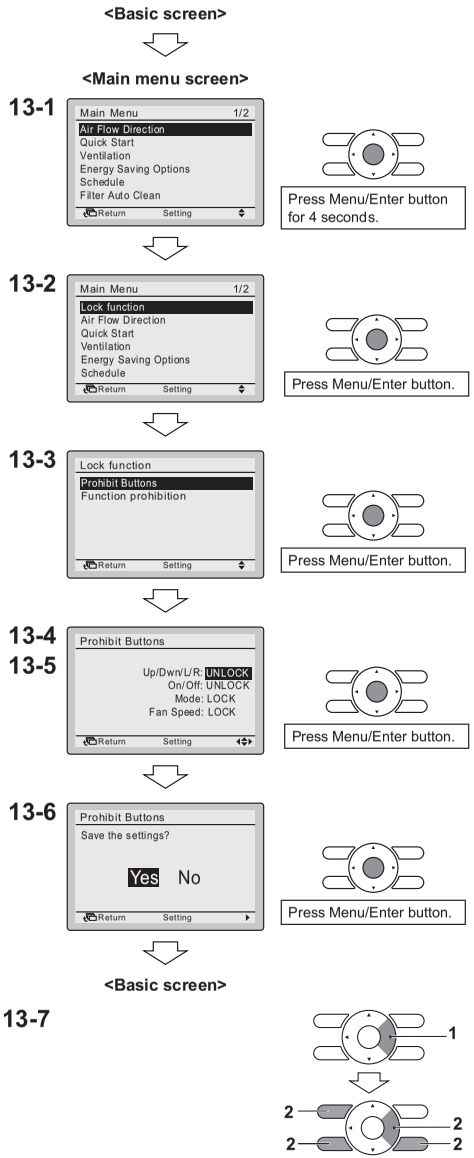

14. Prohibit Function

- Restriction of the number of operable functions.

14-1 Press Menu/Enter button in the Basic screen.
Main menu is displayed.
As usual, "Lock function" is not shown in Main menu.
Press Menu/Enter button for 4 seconds to display the "Lock function".

14-2 Select **Lock function** in the Main menu, press Menu/Enter button.

14-3 Select **Function prohibition** in the menu, press Menu/Enter button.

14-4 Select function by using " ◀▶ " (Left/Right) button and set by using " ▼▲ " (Down/Up) button.

14-5 Press Menu/Enter button.
Setting confirmation screen is displayed.

14-6 Select **Yes** and press Menu/Enter button.
Setting details are confirmed and Basic screen returns.

If you want to restrict the number of operable functions on the remote controller to be defined as "sub", start with only connecting this controller to the unit. Make sure that this controller is set to "main" (factory set) first, change the restrictions to the setting you prefer and only then set the remote controller to "sub".

NOTE: When a function is prohibited, the " 🔑 " will be displayed next to the function in the Main menu screen.

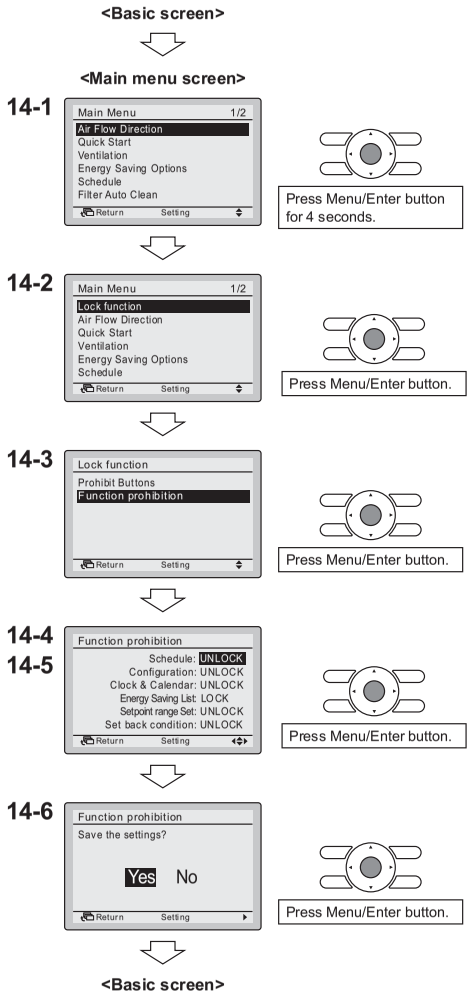

4. Wired Remote Controller with Weekly Schedule Timer

4.1 BRC1D61

2

Adds new, advanced functions to those of the wired remote controller.

BRC1D61

- Includes ventilation mode and airflow rate switching, the main functions of Heat Reclaim Ventilator series.
- 24-hour clock function (1-hour backup for power failures).
- Programming function for each day of week.
- Scheduling possible of start/stop and temperature limit (5 settings/day).
- Programming can be enabled or disabled.
- Copy function for programmed schedules.

4.1.1 Dimensions

Unit (mm)

• REMOTE CONTROLLER DIMENSIONS

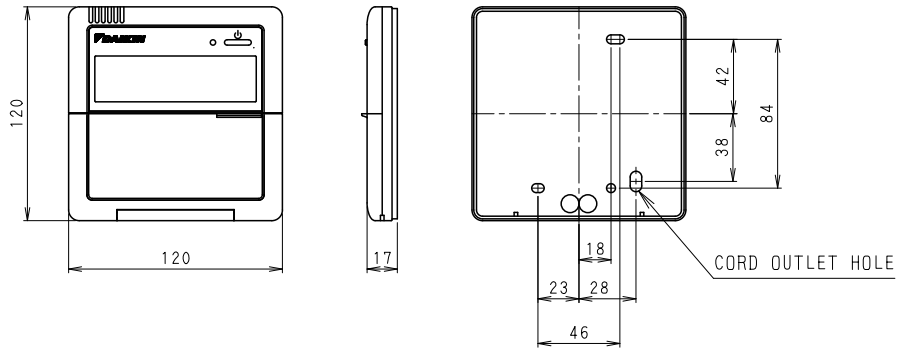

• INSTALLATION METHOD

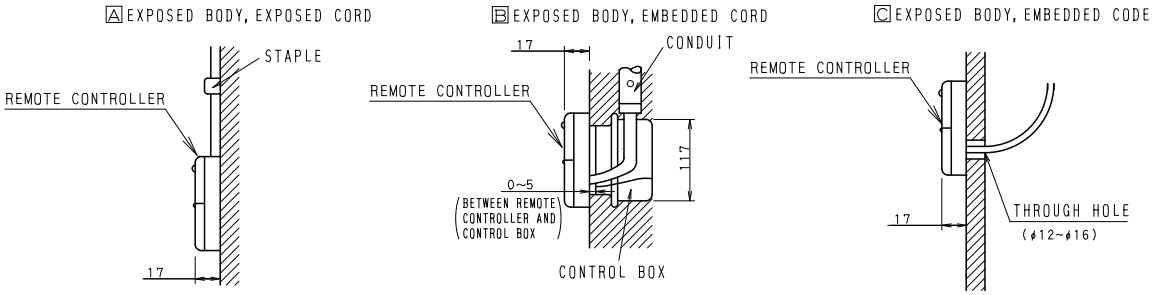

NOTE)1. REMOTE CONTROLLER CORD AND STAPLE ARE NOT ATTACHED. THEY ARE FIELD SUPPLIED PARTS.

• SPECIFICATIONS OF CORD

	FOR AUSTRALIA	FOR OTHER COUNTRIES
TYPE	SHIELD WIRE (INSULATED THICKNESS:1mm OR MORE)	VINYL CORD WITH SHEATH OR CABLE (INSULATED THICKNESS:1mm OR MORE)
SIZE	0.75~1.25mm²	
TOTAL LENGTH	500m	

3D048117

4.1.2 Features and Functions

The BRC1D61 is a state of the art remote controller that offers full control over your installation.

1 BASIC REMOTE CONTROLLER

The basic remote controller functions are:
- ON/OFF,
- operation mode change-over,
- temperature adjustment,
- air volume adjustment
- air flow direction adjustment.

2 CLOCK FUNCTION

The clock functions are:
- 24 hours real time clock,
- day of the week indicator.

3 SCHEDULE TIMER FUNCTION

The schedule timer functions are:
- a maximum of 5 actions can be programmed for each day of the week (totalling 35 actions),
- schedule timer can be enabled/disabled at any time,
- linked to a set temperature or a LIMIT operation or an OFF operation,
- "last command" overrules previous command until next scheduled command.

4 LIMIT OPERATION

Limit operation provides thermostat control within the range of the set minimum and maximum temperature. The minimum temperature setting will trigger heating, the maximum temperature setting will trigger cooling.

5 LEAVE HOME

The leave home function prevents the room temperature from dropping when the occupants are out for a longer period. If the room temperature drops below 10°C, heating is started automatically. As soon as 15°C is reached, the controller returns to its original status.

6 BUTTON PERMISSION LEVEL

Three hierarchical permission levels can be set to limit the user action.

4.1.3 Names and Functions

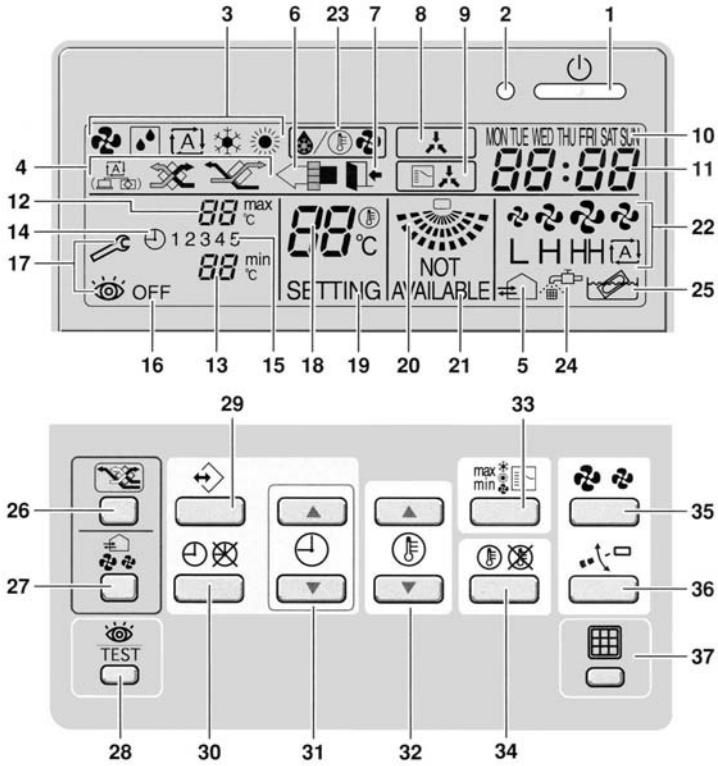

Figure 1

3P107422-3D

4.1.4 Name and Function of Switches and Icons (Refer to figure 1)

1 ON/OFF BUTTON

Press the ON/OFF button to start or stop the system.

2 OPERATION LAMP

The operation lamp lights up during operation or blinks if a malfunction occurs.

3 OPERATION MODE ICON

These icons indicate the current operation mode (FAN, DRY, AUTOMATIC, COOLING, HEATING).

4 VENTILATION MODE ICON

These icons indicate the current ventilation mode (Heat reclaim ventilator only) (AUTOMATIC, HEAT EXCHANGE, BYPASS).

5 VENTILATION ICON

The ventilation icon appears when the ventilation is adjusted with the ventilation amount button (Heat Reclaim Ventilator only). Simultaneously, the ventilation amount is indicated by the fan speed icon (see 22).

6 AIR CLEANING ICON

This icon indicates that the air cleaning unit (option) is operational.

7 LEAVE HOME ICON

The leave home icon shows the status of the leave home function.

ON	Leave home is enabled
FLASHING	Leave home is active
OFF	Leave home is disabled

8 EXTERNAL CONTROL ICON

This icon indicates that another controller with higher priority is controlling or disabling your installation.

9 CHANGE-OVER UNDER CENTRALISED CONTROL ICON

This icon indicates that the change-over of the installation is under centralised control assigned to another indoor unit or optional cool/heat selector connected to the outdoor unit (= main remote controller).

10 DAY OF THE WEEK INDICATOR
MON TUE WED THU FRI SAT SUN

The day of the week indicator shows the current week day (or the set day when reading or programming the schedule timer).

11 CLOCK DISPLAY 88:88

The clock display indicates the current time (or the action time when reading or programming the schedule timer).

12 MAXIMUM SET TEMPERATURE 88 max °C

The maximum set temperature indicates the maximum set temperature when in limit operation.

13 MINIMUM SET TEMPERATURE 88 min °C

The minimum set temperature indicates the minimum set temperature when in limit operation.

14 SCHEDULE TIMER ICON

This icon indicates that the schedule timer is enabled.

15 ACTION ICONS 1 2 3 4 5

These icons indicate the actions for each day of the schedule timer.

16 OFF ICON OFF

This icon indicates that the OFF action is selected when programming the schedule timer.

17 INSPECTION REQUIRED and

These icons indicate that inspection is required. Consult your installer.

18 SET TEMPERATURE DISPLAY 88 °C

This indicates the current set temperature of the installation (not shown in LIMIT operation or in FAN or DRY mode).

19 SETTING SETTING

Not used, for service purposes only.

20 AIRFLOW DIRECTION ICON

This icon indicates the air flow direction (only for installations with motorised air flow flaps).

21 NOT AVAILABLE NOT AVAILABLE

NOT AVAILABLE is displayed whenever a non-installed option is addressed or a function is not available.

22 FAN SPEED ICON L H HH A

This icon indicates the set fan speed.

23 DEFROST/HOTSTART MODE ICON

This icon indicates that the defrost/hotstart mode is active.

24 AIR FILTER CLEANING TIME ICON

This icon indicates the air filter must be cleaned. Refer to the manual of the indoor unit.

25 ELEMENT CLEANING TIME ICON

This icon indicates the element must be cleaned (Heat reclaim ventilator only).

26 VENTILATION MODE BUTTON

The ventilation mode button operates the Heat reclaim ventilator; refer to the Heat reclaim ventilator manual for more details.

27 VENTILATION AMOUNT BUTTON

This button sets the ventilation amount; refer to the Heat reclaim ventilator manual for more details.

3P107422-3D

28 INSPECTION/TEST OPERATION BUTTON TEST

Not used, for service purposes only.

29 PROGRAMMING BUTTON

This button is a multi-purpose button.

Depending on the previous manipulations of the user, the programming button can have various functions.

30 SCHEDULE TIMER BUTTON

This button enables or disables the schedule timer.

31 TIME ADJUST BUTTON

These buttons are used to adjust the clock or, when in programming mode, to adjust the programmed action time. Both buttons have an auto-repeat function.

32 TEMPERATURE ADJUST BUTTONS

These buttons are used to adjust the current setpoint or, when in programming mode, to adjust the programmed setpoint temperature (step = 1°C). Both buttons are also used to adjust the day of the week.

33 OPERATION CHANGE/MIN-MAX BUTTON

This button is a multi-purpose button. Depending on the previous manipulations of the user, it can have following functions:

1 select the operation mode of the installation (FAN, DRY, AUTOMATIC, COOLING, HEATING)

2 toggle between minimum temperature and maximum temperature when in limit operation

34 SETPOINT/LIMIT BUTTON

This button toggles between setpoint, limit operation or OFF (programming mode only).

35 FAN SPEED BUTTON

This button toggles between L (Low), H (High), HH (very High), (Automatic).

36 AIRFLOW DIRECTION ADJUST BUTTON

This button enables to adjust the air flow direction.

37 AIR FILTER CLEANING TIME ICON RESET BUTTON

This button is used to reset the air filter cleaning time icon.

3P107422-3D

4.1.5 Installation Manual

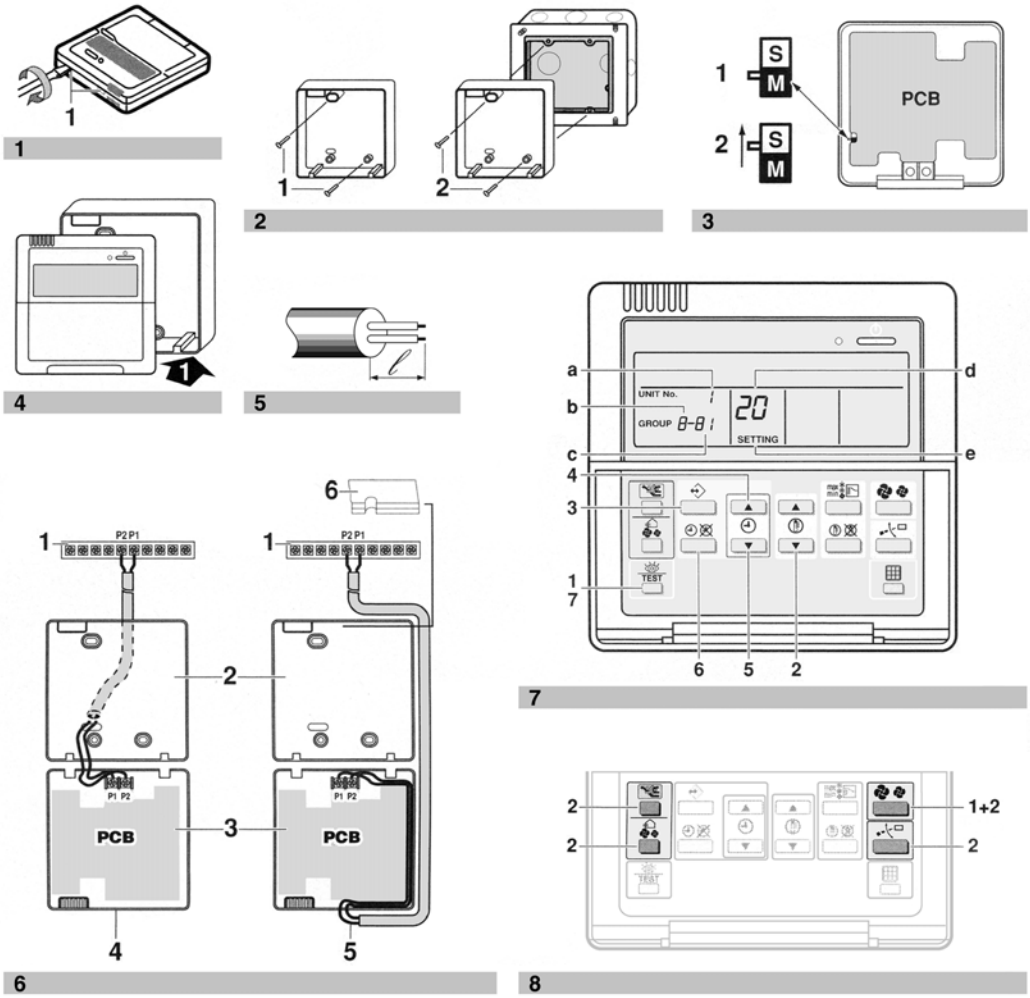

3P107422-4D

The kit includes the following parts:

Remote controller	Wood screws
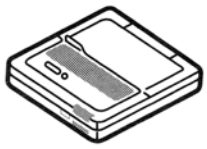	

Wall plugs	Machine screws

1. Remove the upper part of remote controller (Refer to figure 1)

Insert a minus screwdriver into the slots (1) in the lower part of the remote controller (2 places), and remove the upper part of the remote controller.

The PC board is mounted in the upper part of the remote controller. Be careful not to damage the board with the minus screwdriver.

2. Fasten the remote controller (Refer to figure 2)

1 for exposed mounting, fasten with the two included wood screws (Ø4x30) and plugs.

2 for flush-mounting, fasten with the two included machine screws (M4x16).

For the field supplied switch box, use optional accessory KJB111A or KJB211A.

NOTE Choose the flattest place possible for the mounting surface. Be careful not to distort the shape of the lower part of the remote controller by overtightening the mounting screws.

3. Wire the indoor unit (Refer to figure 6)

1 indoor unit

2 lower part of the remote controller

3 upper part of the remote controller

4 wired from the rear

5 wired from the top

6 notch the part for the wiring to pass through with nippers, etc.

Connect the terminals on top of the upper part of the remote controller (P1, P2), and the terminals of the indoor unit (P1, P2). (P1 and P2 do not have polarity.)

NOTE When wiring, run the wiring away from the power supply wiring in order to avoid receiving electric noise (external noise).

Wiring specifications

Wiring type	Size
2 wire	0.75–1.25 mm^2

NOTE Peel the shield for the part that has to pass through the inside of the remote controller case (⁄). Refer to figure 5.

4. Reattach the upper part of the remote controller

Be careful not to pinch the wiring when attaching.

Refer to figure 4:

First begin fitting from the clips at the bottom.

NOTE
1. The switch box and wiring for connection are not included.
2. Do not directly touch the PC board with your hand.

If controlling one indoor unit or one group of indoor units with two remote controllers

Change the MAIN/SUB changeover switch setting as described below (Refer to figure 3).

1 Main remote controller (factory set)

2 Sub remote controller

Set one remote controller to “main”, and the other to “sub”.

NOTE
1. If controlling with one remote controller, be sure to set it to “main”.
2. Set the remote controller before turning the power supply on.

“88” is displayed for about one minute when the power supply is turned on. During this time the remote controller can not be operated.

3P107422-4D

5. Permission level function

- If required, you can limit the user action by restricting the number of operable buttons. Refer to the chapter "Field settings".

Level	Operable buttons
1	All
2	• on/off button • schedule timer button • temperature adjust button • operation change/MIN-MAX button • fan speed button • air flow direction adjust button
3	• on/off button • temperature adjust button • fan speed button

- For switching between level 1 permission and the selected level in service, proceed as follows:

  1 Keep the fan speed button " " pressed,

  2 and press the 3 other indicated keys simultaneously while keeping the fan speed button " " pressed.

  Refer to figure 8.

- If you want to limit the user action on the remote controller to be defined as "sub", start with only connecting this controller to the unit. Make sure that this controller is set to "main" (factory set) first, change the permission level to the setting you prefer and only then set the remote controller to "sub".
  You can now proceed with connecting the remote controller to be defined as "main".

6. Field settings

If optional accessories are mounted on the indoor unit, the indoor unit setting may have to be changed. Refer to the instruction manual for each optional accessory.

Refer to figure 7.

a Unit NO
b First Code NO
c Second Code NO
d Mode NO
e Field set mode

Procedure (Refer to figure 7)

1 When in the normal mode, press the " TEST " button for a minimum of four seconds, and the FIELD SET MODE is entered.

2 Select the desired MODE NO. with the " " button.

3 During group control, when setting by each indoor unit (mode No. 20, 21, 22 and 23 have been selected), push the " " button and select the INDOOR UNIT NO. to be set. (This operation is unnecessary when setting by group.)

4 Push the " " upper button and select FIRST CODE NO.

5 Push the " " lower button and select the SECOND CODE NO.

6 Push the " " button once and the present settings are SET.

7 Push the " TEST " button to return to the NORMAL MODE.

Example

If during group setting and the time to clean the air filter is set to FILTER CONTAMINATION - HEAVY, SET MODE NO. to "10", FIRST CODE NO. to "0", and SECOND CODE NO. to "02".

NOTE

1. Setting is carried out in the group mode, however, if the mode number inside the parentheses is selected, indoor units can also be set individually.
2. The SECOND CODE number is set to "01" when shipped from the factory.
3. Do not make any settings not given in the table.
4. Not displayed if the indoor unit is not equipped with that function.
5. When returning to the normal mode, "88" may be displayed in the LCD in order for the remote controller to initialize itself.
6. It is not possible to change field settings on the remote controller that is set to "sub".

3P107422-4D

Mode No. Note 1	FIRST CODE NO.	Description of setting		SECOND CODE NO. Note 2					
				01		02		03	04
10(20)	0	Filter Contamination - Heavy/Light (Setting for spacing time of display time to clean air filter) (Setting for when filter contamination is heavy, and spacing time of display time to clean air filter is to be halved)	Ultra long life filter	Light	Approx. 10.000 hrs.	Heavy	Approx. 5.000 hrs.	—	—
			Long life filter		Approx. 2.500 hrs.		Approx. 1.250 hrs.		
			Standard filter		Approx. 200 hrs.		Approx. 100 hrs.		
	1	Long-life filter type (setting of filter sign indication time). (Change setting when ultra-long filter is installed)		Long-life filter		Ultra-long life filter		—	—
	2	Thermostat sensor in remote controller		Use		Not use		—	—
	3	Spacing time of display time to clean air filter count (setting for when the filter sign is not to be displayed)		Display		Do not display		—	—
11(21)	0	Setting number of connected Sky Air simultaneous operation system indoor units (setting for simultaneous operations system)		Pair		Twin		Triple	Double twin
12(22)	1	ON/OFF input from outside (setting for when forced ON/OFF is to be operated from outside).		Forced OFF		ON/OFF operation		—	—
	2	Thermostat differential changeover (setting for when using remote sensor).		1°C		0.5°C		—	—
13(23)	0	High air outlet velocity (for high ceiling applications).		≤2.7 m		>2.7≤3.0 m		>3.0≤3.5 m	—
	1	Selection of air flow direction (setting for when a blocking pad kit has been installed).		4-way flow		3-way flow		2-way flow	—
	3	Selection of air flow function (setting for when using a decoration panel for outlet).		Equipped		Not equipped		—	—
	4	Air flow direction range setting.		Upper		Normal		Lower	—
	6	Setting the external static pressure (setting according to the connected duct resistance) (for FHYK, follow the high ceiling setting)		Normal (Normal)		High static pressure (High ceiling)		Low static pressure —	—
15(25)	3	Drain pump operation with humidifying.		Equipped		Not equipped		—	—
1b	0	Permission level setting		Level 2		Level 3		—	—
	1	Leave home function		Not permitted		Permitted		—	—
	2	Thermostat sensor in remote controller (for limit operation and leave home function only)		Use		Not use		—	—

3P107422-4D

5. Simplified Remote Controller

5.1 BRC2C51

5.1.1 Dimension

Unit (mm)

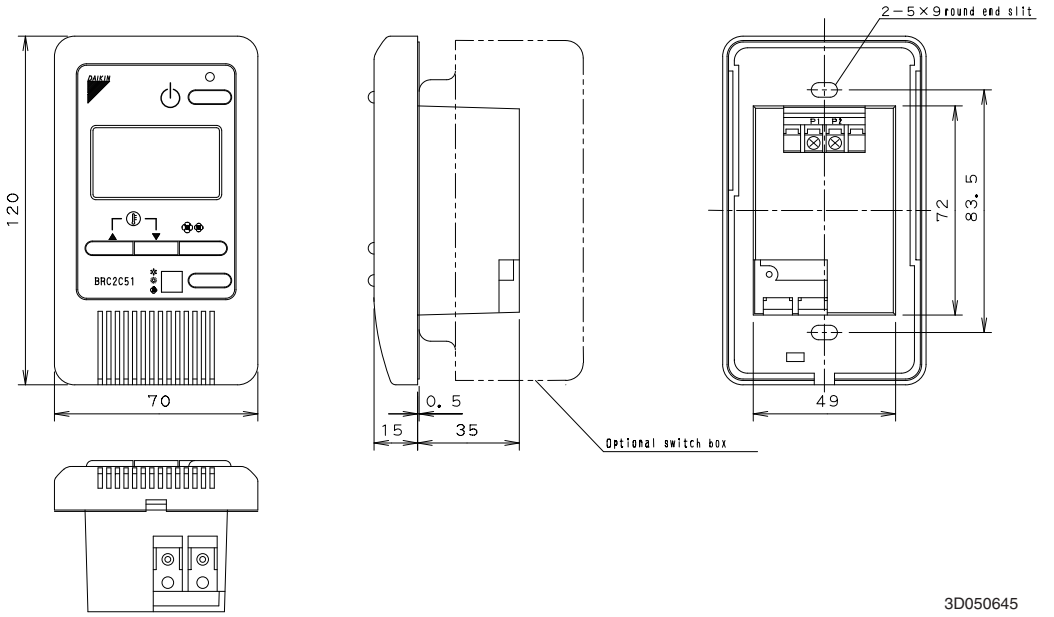

3D050645

5.1.2 Installation Manual

1. Remove the upper part of remote controller.

Insert minus screwdriver into the slots between the upper and the lower part of remote controller.

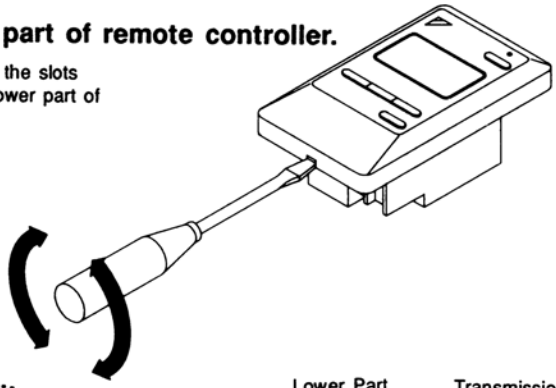

2. Wire the indoor unit.

Connect terminals P1 and P2 on the rear of the lower part of remote controller to terminals P1 and P2 on the indoor unit. (Terminals P1 and P2 have no polarity.)

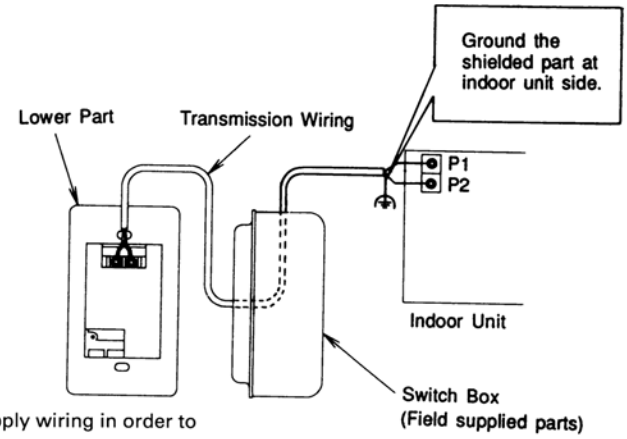

NOTE

1. When wiring, run the wiring away from the power supply wiring in order to avoid receiving electric noise (external noise).
2. When wiring, refer to the wiring diagram of indoor unit (attached to indoor unit) as well.

WIRING SPECIFICATION

Wiring type	Shield wire (2 wire) (See NOTE 2,3)
Size	0.75 – 1.25 mm^2

NOTE) 1. Treat the terminal for the wire to be connected to the remote controller so the shielded part does not touch any other part.
2. Sheathed wire may be used for transmission wirings, but they do not comply with EMC (Electromagnetic Compatibility) (European Directive).
When using sheathed wire, EMC must conform to Japanese standards stipulated in the Electric Appliance Regulatory Act. (If using a sheathed wire, the grounding shown the figure on the right is unnecessary.)

3PA52943C

3. Fasten the remote controller.

Attach the lower part of remote controller to the switch box (field supplied parts).

NOTE

Choose the flattest place possible for the mounting surface. Be careful not to distort the shape of the lower part of remote controller by over-tightening the mounting screws.

For the field supplied switch box, use optional accessories KJB111A.

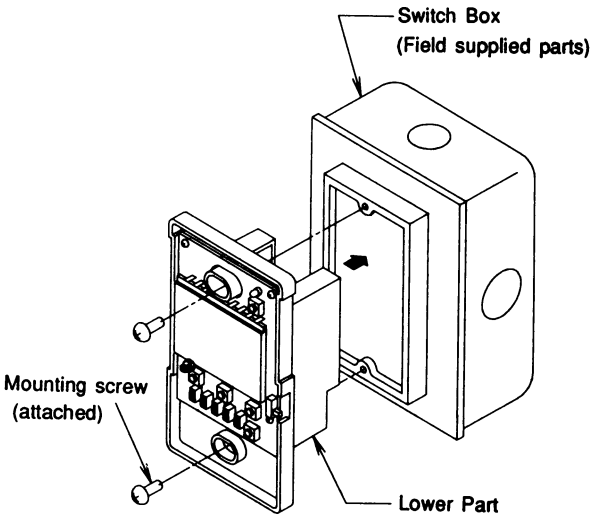

4. Initial setting

Change the MAIN/SUB changeover switch setting as described below.
If controlling one indoor unit with two remote controllers.
Set one remote controller to "main," and the other to "sub."

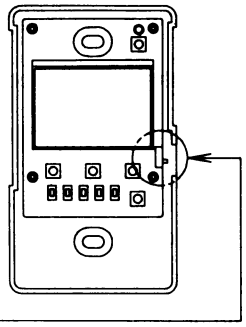

Main Remote Controller (Factory Set)

Sub Remote Controller

NOTE

- If controlling with one remote controller, be sure to set it to "main."
- Set the remote controller before turning power supply on.

"88" is displayed for about one minute when the power supply is turned on, and the remote controller cannot be operated in some cases.

5. Reattach the upper part of remote controller.

NOTE

1. The switch box and wiring for connection are not included.
2. Do not directly touch the PC board with your hand.

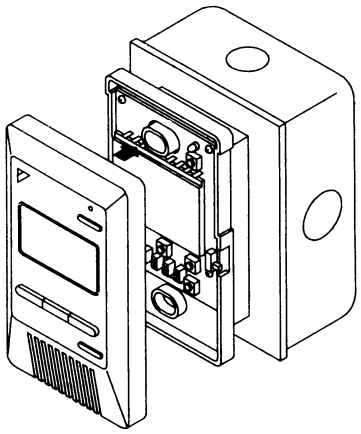

3PA52943C

FIELD SETTING

(If optional accessories are mounted on the indoor unit, the indoor unit setting may have to be changed. Refer to the instruction manual for each optional accessory.)

Procedure

① Remove the upper part of remote controller.

② When in the normal mode, press the BS6 BUTTON (field set), and the FIELD SET MODE is entered.

③ Select the desired MODE No. with the BS2 BUTTON (temperature setting ▲) and the BS3 BUTTON (temperature setting ▼).

④ During group control, when setting by each indoor unit (mode No. 20, 22 and 23 have been selected), push the BS8 BUTTON (unit no.) and select the INDOOR UNIT NO. to be set. (This operation is unnecessary when setting by group.)

⑤ Push the BS9 BUTTON (set A) and select FIRST CODE NO.

⑥ Push the BS10 BUTTON (set B) and select SECOND CODE NO.

⑦ Push the BS7 BUTTON (set/cancel) once and the present settings are SET.

⑧ Push the BS6 BUTTON (field set) to return to the NORMAL MODE.

(Example) If during group setting and the time to clean air filter is set to FILTER CONTAMINATION - HEAVY, SET MODE NO. to "10," FIRST CODE NO. to "0," and SECOND CODE NO. to "02."

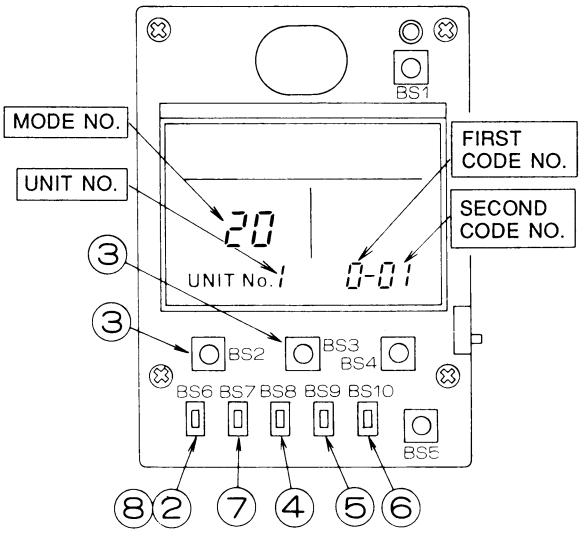

Mode No. Note) 1	FIRST CODE No.	Description of Setting		SECOND CODE No. Note) 2					
				01		02		03
10(20) Note) 6	0	Filter Contamination - Heavy/Light (Setting for spacing time of display time to clean air filter) (Setting for when filter contamination is heavy, and spacing time of display time to clean air filter is to be halved)	Long Life Filter	Light	Approx. 2,500 Hrs.	Heavy	Approx. 1,250 Hrs.	—
			Standard Filter		Approx. 200 Hrs.		Approx 100 Hrs.	
	3	Spacing Time of Display Time to Clean Air Filter Count (Setting for when the filter sign is not to be displayed)		Display		Do Not Display		—
12(22)	1	ON/OFF Input from Outside. (Setting for when forced ON/OFF is to be operated from outside.)		Forced OFF		ON/OFF Operation		
	2	Thermostat Differential Changeover (Setting for when using the remote sensor) FXYC, FXYF, FXYK or FXYH only		1°C		0.5°C		—
13(23)	0	High Air Outlet Velocity (Setting for when installed in a high ceiling) FXYF only		2.7 m or less		More than 2.7 m; 3.0 m or less		More than 3.0 m; 3.5 m or less
	1	Selection of Air Flow Direction (Setting for when a blocking pad kit has been installed) FXYF only		4-way flow		3-way flow		2-way flow
15(25)	1	Humidifying with thermostat OFF		Not equipped		Equipped		
	3	Drain pump operation with humidifying		Not equipped		Equipped		

NOTE) 1. Setting is carried out in the group mode, however, if the mode number inside the parentheses is selected, indoor units can also be set individually.
2. The SECOND CODE number. is set to "01" when shipped from the factory.
3. Do not make any settings not given in the table on the left.
4. Not displayed if the indoor unit is not equipped with that function.
5. When returning to the normal mode, "88" may be displayed in the LCD in order for the remote controller to initialize itself.
6. This mode is used to set the time until the display time to clean air filter lights up when using central remote controller.

3PA52946A

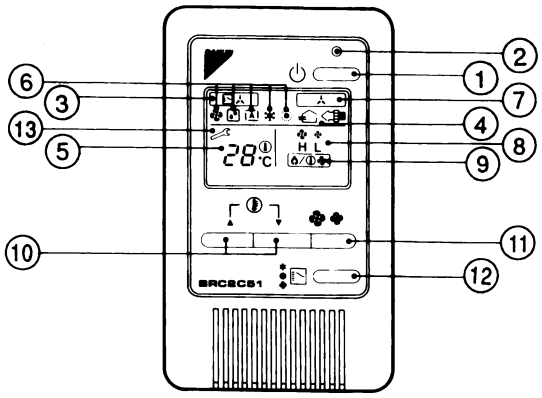

REMOTE CONTROLLER: NAME AND FUNCTION OF EACH SWITCH AND DISPLAY	
①	**ON/OFF BUTTON** Press the button and the system will start. Press the button again and the system will stop.
②	**OPERATION LAMP (RED)** The lamp lights up during operation. Blinks in case of stop due to malfunction.
③	**DISPLAY " " (CHANGEOVER UNDER CONTROL)** It is impossible to changeover heat/cool with the remote controller when it shows this display. (As for details, see " SETTING OF MASTER REMOTE CONTROLLER" in the operation manual attached to the indoor unit.)
④	**DISPLAY " OPTION " (VENTILATION)** This display shows that the total heat exchanger (HRV) are in operation.
⑤	**DISPLAY "28 °C "(SET TEMPERATURE)** This display shows the set temperature. Only given during a cooling or heating operation.
⑥	**DISPLAY " " " " " " " " " (OPERATION MODE)** This display shows current OPERATION MODE. " " is not available with outdoor units specially designed for cooling only. " " is reserved only for outdoor units capable of heat recovery.
⑦	**DISPLAY " " (UNDER CENTRALIZED CONTROL)** When this display shows, the system is UNDER CENTRALIZED CONTROL. (This is not a standard specification)
⑧	**DISPLAY " H L " (FAN SPEED).** The display shows the fan speed: "HIGH" or "LOW".
⑨	**DISPLAY " " (DEFROST/ HOT START)** Indicates that defrost or hot start (during which the fan is stopped till the temperature of air supply rises enough at the start of a heating run) is progress.
⑩	**TEMPERATURE SETTING BUTTON** Use this button for SETTING TEMPERATURE of the thermostat. ▲ ; Each press raises the set temperature by 1°C. ▼ ; Each press lowers the set temperature by 1°C. The variable temperature range is 16°C to 32°C.
⑪	**FAN SPEED CONTROL BUTTON** Press this button to select the fan speed, HIGH or LOW, of your choice.
⑫	**OPERATION MODE SELECTOR BUTTON** Press this button to select OPERATION MODE.
⑬	**DISPLAY " " (MALFUNCTION)** Indicates malfunction and blinks if the unit stops operating due to malfunction. (As for details, see "TROUBLE SHOOTING" in the operation manual attached to the indoor unit.)
For the sake of explanation, all indications are shown in the figure above contrary to actual running situations.	

C: 2PA52942

6. Remote Controller for Hotel Use

6.1 BRC3A61

6.1.1 Dimension

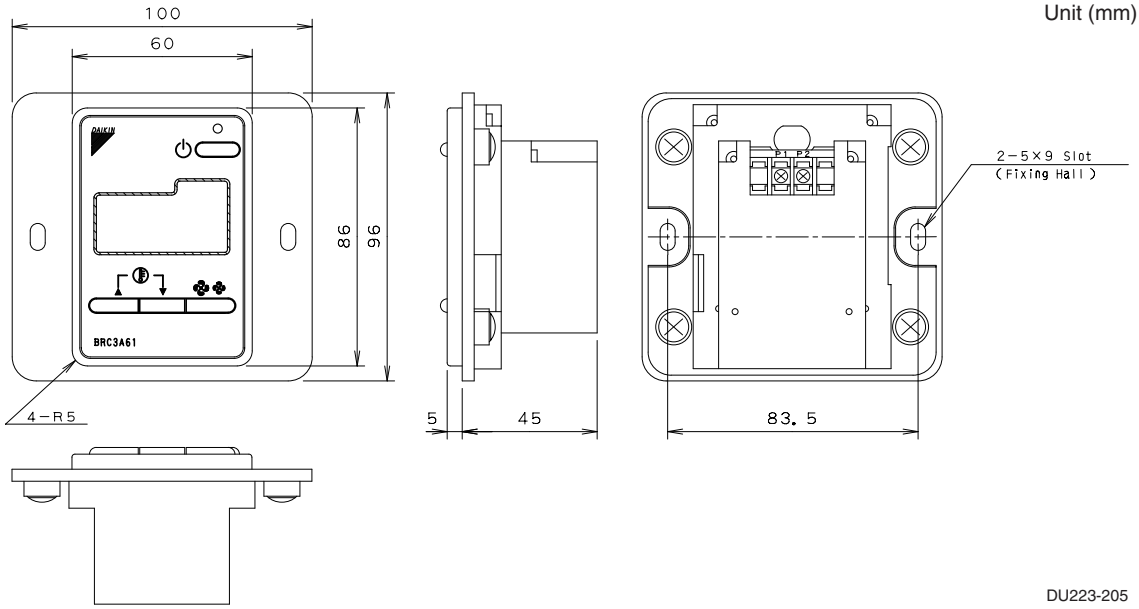

6.1.2 Installation Manual

1, Prepare for the fixing panel

Open a hole in the panel and install two mounting bolt at below.

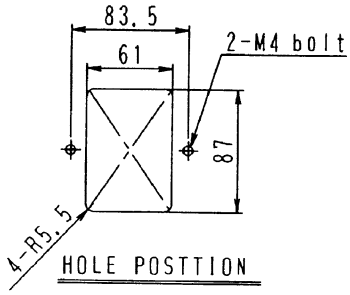

2, Attach the remote controller

Attach the remote controller to the hole.

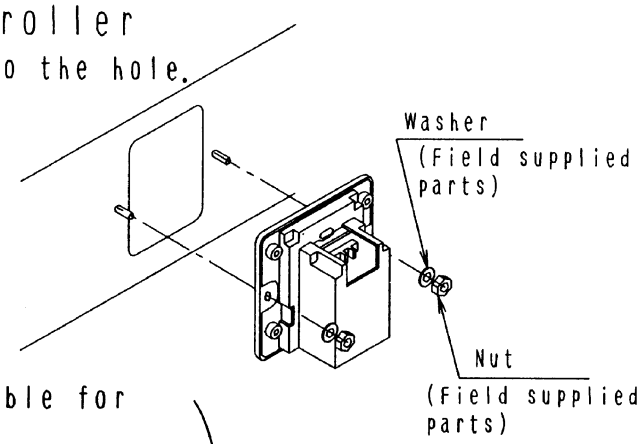

(Choose the flattest place possible for the mounting surface.
Be careful not to distort the shape of the casing of remote controller by over-lightening the nuts.)

《 PRECAUTION 》

1. The washers and nuts are not included.
2. Do not directly touch the PC board with your hand.

3PA61527

3, Wire the indoor unit.

Connect terminals P1 and P2 on the rear of the lower part of remote controller to terminals P1 and P2 on the indoor unit. (Terminals P1 and P2 have no polarity)

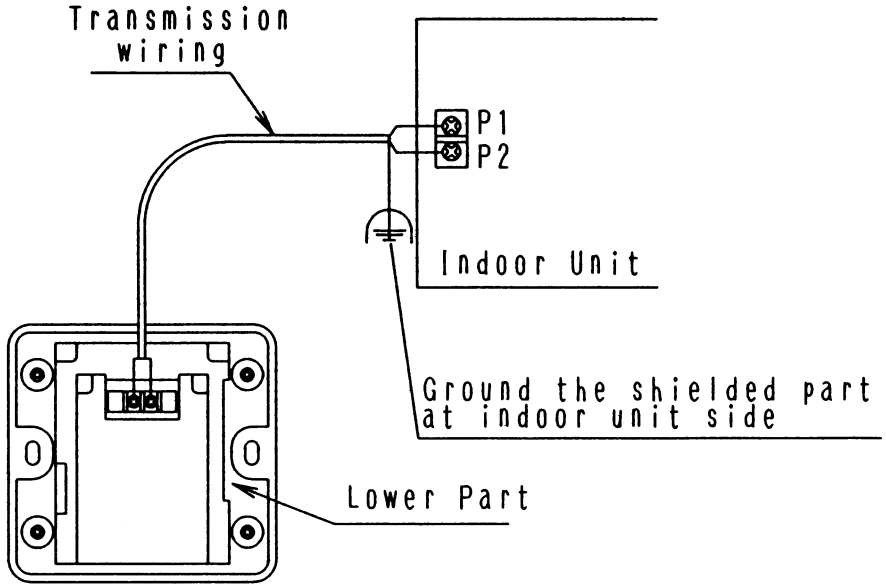

《 PRECAUTION 》

① When wiring, run the wiring away the power supply wiring in order to avoid receiving electric noise (ex-ternal noise)

② When wiring, refer to the wiring diagram of indoor unit (attached to indoor unit) as well.

WIRING SPECIFICATION

Wiring type	Shield wire (2 wire)(See NOTE 2)
Size	0.75～1.25mm²

NOTE)

1. Treat the terminal for the wire to be connected to the remote controller so the shielded part does not touch any other part.
2. Sheathed wire may be used for transmission wirings. If using a sheathed wire, as for Electromagnetic Compatibility the system must conform to the Electrical Appliance And Material Control Law Of Japan.

3PA61527

4, Initial setting

Remove the screws(×4) and remove the lower part of remote controller.

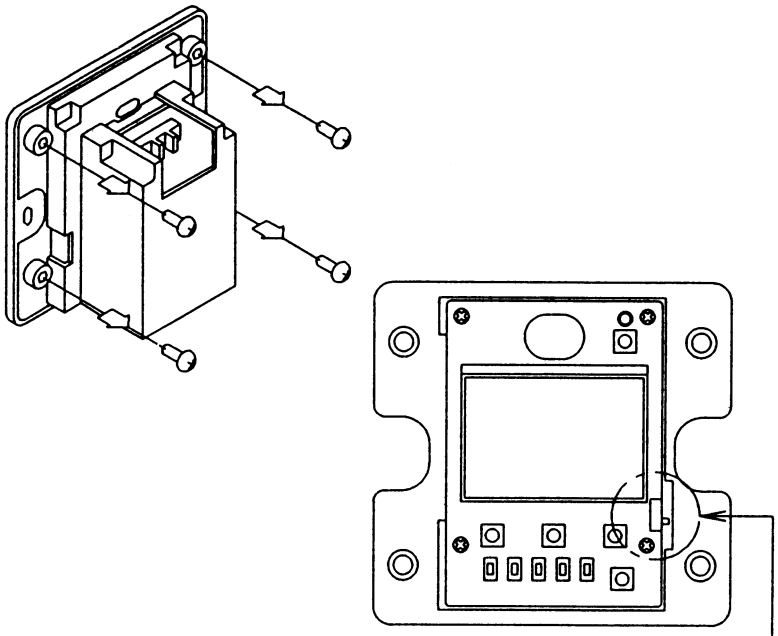

Change the MAIN/SUB changeover switch

If controlling one indoor unit with two remote controlles setting as described below. Set one remote controller to 'MAIN', and the other to' SUB'

Main Remote Controller (Factory Set)

Sub Remote Controller

《 PRECAUTION 》

- If controling with one remote controller, be sure to set it to 'MAIN'
- Set the remote controller before turning power supply on.

'88' is displayed for about one minute when the power supply is turned on, and the remote controller cannot be operated in some cases.

3PA61527

FIELD SETTING

(If optional accessories are mounted on the indoor unit, the indoor unit setting may have to be changed. Refer to the instruction manual for each optional accessory.)

Procedure

① Remove the upper part of remote controller.

② When in the normal mode, press the BS6 BUTTON (field set), and the FIELD SET MODE is entered.

③ Select the desired MODE No. with the BS2 BUTTON (temperature setting ▲) and the BS3 BUTTON (temperature setting ▼).

④ During group control, when setting by each indoor unit (mode No. 20, 22 and 23 have been selected), push the BS8 BUTTON (unit no.) and select the INDOOR UNIT NO. to be set. (This operation is unnecessary when setting by group.)

⑤ Push the BS9 BUTTON (set A) and select FIRST CODE NO.

⑥ Push the BS10 BUTTON (set B) and select SECOND CODE NO.

⑦ Push the BS7 BUTTON (set/cancel) once and the present settings are SET.

⑧ Push the BS6 BUTTON (field set) to return to the NORMAL MODE.

(Example) If during group setting and the time to clean air filter is set to FILTER CONTAMINATION - HEAVY, SET MODE NO. to "10," FIRST CODE NO. to "0," and SECOND CODE NO. to "02."

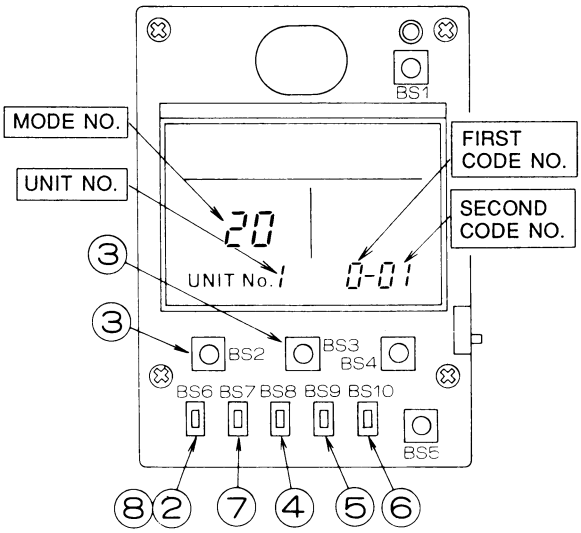

Mode No. Note) 1	FIRST CODE No.	Description of Setting		SECOND CODE No. Note) 2				
				01		02		03
10(20) Note) 6	0	Filter Contamination - Heavy/Light (Setting for spacing time of display time to clean air filter) (Setting for when filter contamination is heavy, and spacing time of display time to clean air filter is to be halved)	Long Life Filter	Light	Approx. 2,500 Hrs.	Heavy	Approx. 1,250 Hrs.	—
			Standard Filter		Approx. 200 Hrs.		Approx 100 Hrs.	
	3	Spacing Time of Display Time to Clean Air Filter Count (Setting for when the filter sign is not to be displayed)		Display		Do Not Display		—
12(22)	1	ON/OFF Input from Outside. (Setting for when forced ON/OFF is to be operated from outside.)		Forced OFF		ON/OFF Operation		
	2	Thermostat Differential Changeover (Setting for when using the remote sensor) FXYC, FXYF, FXYK or FXYH only		1°C		0.5°C		—
13(23)	0	High Air Outlet Velocity (Setting for when installed in a high ceiling) FXYF only		2.7 m or less		More than 2.7 m; 3.0 m or less		More than 3.0 m; 3.5 m or less
	1	Selection of Air Flow Direction (Setting for when a blocking pad kit has been installed) FXYF only		4-way flow		3-way flow		2-way flow
15(25)	1	Humidifying with thermostat OFF		Not equipped		Equipped		
	3	Drain pump operation with humidifying		Not equipped		Equipped		

NOTE) 1. Setting is carried out in the group mode, however, if the mode number inside the parentheses is selected, indoor units can also be set individually.
2. The SECOND CODE number. is set to "01" when shipped from the factory.
3. Do not make any settings not given in the table on the left.
4. Not displayed if the indoor unit is not equipped with that function.
5. When returning to the normal mode, "88" may be displayed in the LCD in order for the remote controller to initialize itself.
6. This mode is used to set the time until the display time to clean air filter lights up when using central remote controller.

3PA52946A

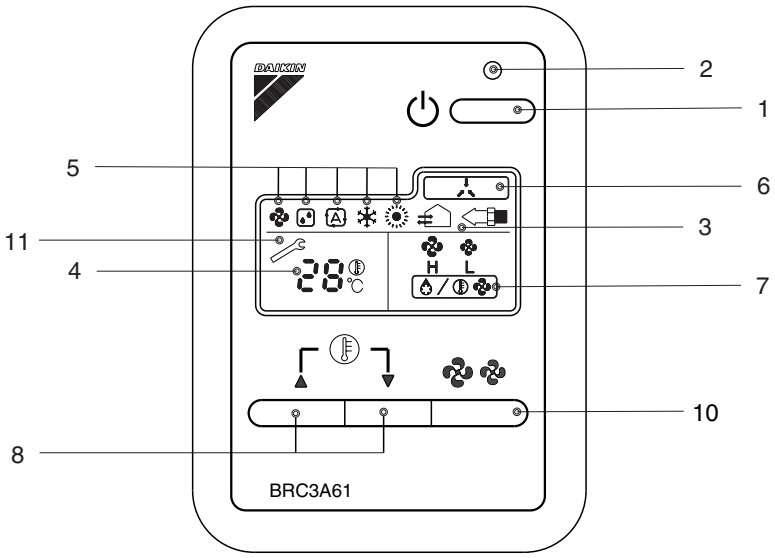

REMOTE CONTROLLER: NAME AND FUNCTION OF EACH SWITCH AND DISPLAY			
1	ON/OFF BUTTON Press the button and the system will start. Press the button again and the system will stop.	7	DISPLAY " H L " (FAN SPEED) The display shows the fan speed: "HIGH" or "LOW".
2	OPERATION LAMP (RED) The lamp lights up during operation. Blinks in case of stop due to malfunction.	8	DISPLAY " / " (DEFROST/HOT START) Indicates that defrost or hot start (during which the fan is stopped till the temperature of air supply rises enough at the start of a heating run) is progress.
3	DISPLAY " OPTION" (VENTILATION / AIR CLEANING) This display shows that Heat Reclaim Ventilator is in operation. (This is optional accessory)	9	TEMPERATURE SETTING BUTTON Use this button for SETTING TEMPERATURE of the thermostat. ▲ : Each press raises the set temperature by 1˚C ▼ : Each press lowers the set temperature by 1˚C The variable temperature range is 16˚C to 32˚C.
4	DISPLAY " 28 " (SET TEMPERATURE) This display shows the set temperature. Only given during a cooling or heating operation.	10	FAN SPEED CONTROL BUTTON Press this button to select the fan speed, HIGH or LOW, of your choice.
5	DISPLAY " " " " " " " " (OPERATION MODE) This display shows current OPERATION MODE. " " is not available with outdoor units specially designed for cooling only. " " is reserved only for outdoor units capable of heat recovery.	11	DISPLAY " " (MALFUNCTION) Indicates malfunction and blinks if the unit stops operating due to malfunction. (As for details. see "TROUBLESHOOTING" in the operation manual attached to the indoor uint or the outdoor unit.)
6	DISPLAY " " (UNDER CENTRALIZED CONTROL) When this display shows, the system is UNDER CENTRALIZED CONTROL (This is not a standard specification)		

Note:

- For the sake of explanation, all indications are shown in the figure above contrary to actual running situations.
- This remote controller does not have "AIR FLOW DIRECTION ADJUST BUTTON".
  Don't operate the flap adjusting air flow direction by your hand for the indoor unit with auto-swing function.

3PA61137

7. Adaptor for Wiring

7.1 KRP1B61

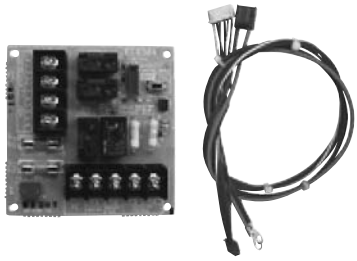

Item / Model		KRP1B61
Dimensions	mm	100×100
Length of lead wire	mm	400
Accessories		PC board support. Clamp. Installation manual.

Accessories Check if the following accessories are included in the kit.

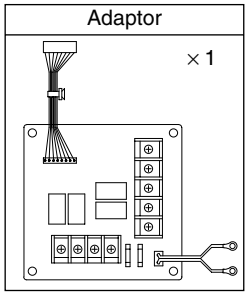

Printed circuit board support	× 4
Clamp	× 3
Installation manual	× 1

NOTE
- Kits vary according to applicable models.
- A special adaptor fixing plate and box are required for the following models.
  FXC(Q)·····KRP1B96

7.1.1 Names of Parts

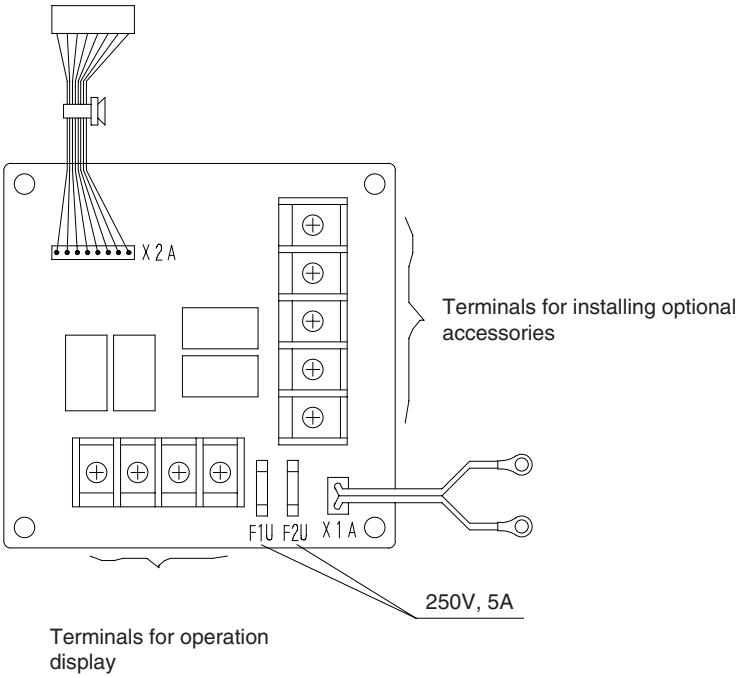

7.1.2 Electric Wiring Work

- Refer to the WIRING DIAGRAM attached to the indoor unit before attempting to wire.
  〔Make sure wires to units do not pass over the PC board when wiring.〕
- Wire the adaptor to the indoor unit as shown below.

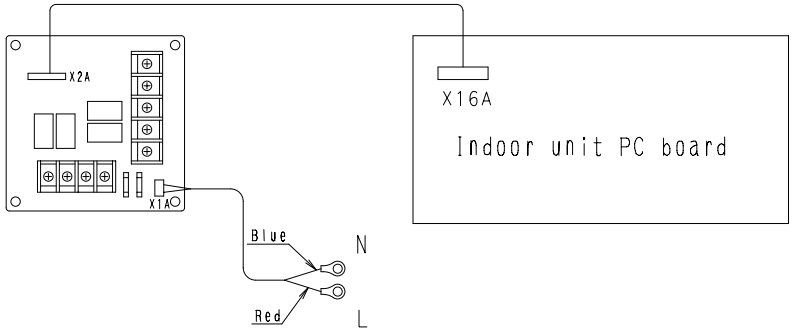

① Fetching the operation display signal

- Attaching an hour meter

Output is generated at the contact while the compressor is running.

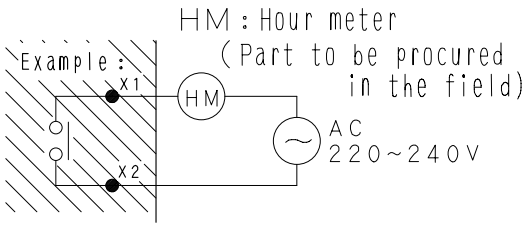

- Fan ON display

Output is generated at the contact while the fan is running.

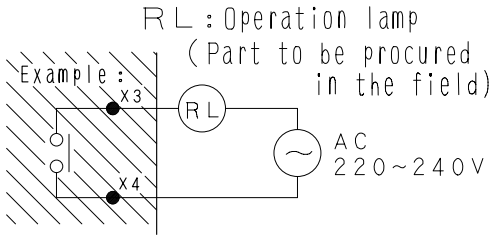

② If optional accessories are installed(auxiliary electric heater, humidifier)

- Wire correctly in accordance with the attached installation manual.
- Refer to the wiring diagram applied to the indoor unit when running electric wiring.

C: 2PA61563D

7.1.3 Installation Manual

- Installation differs according to models as shown below.
- Do not bundle low and high voltage wires together.
- Bundle any access wires with the attached clamps so as to keep loose wirings off the indoor unit printed circuit board

Ceiling mounted built-in type

FXS

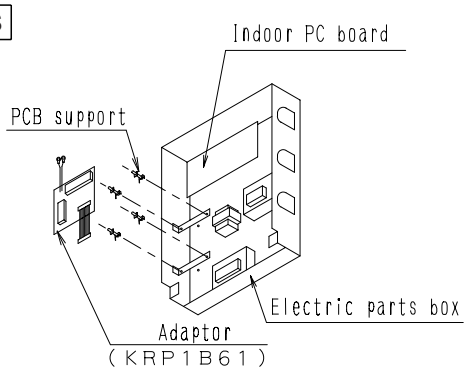

Ceiling mounted cassette type

FXK (Q) (Corner model)

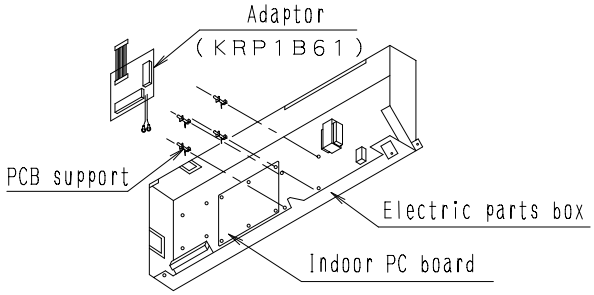

Ceiling mounted duct type

FXM 40~125

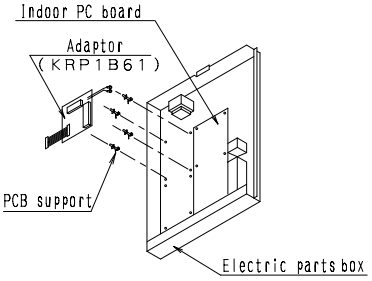

FXM (Q) 200 · 250

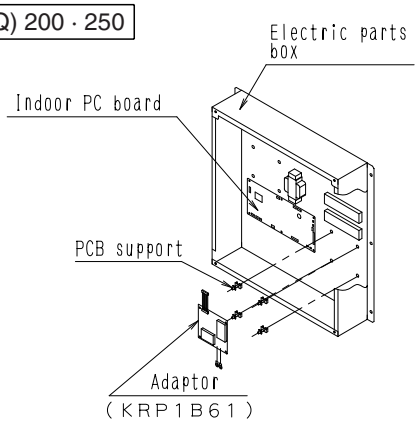

Ceiling mounted cassette type

FXC (Q) (Double-flow model)

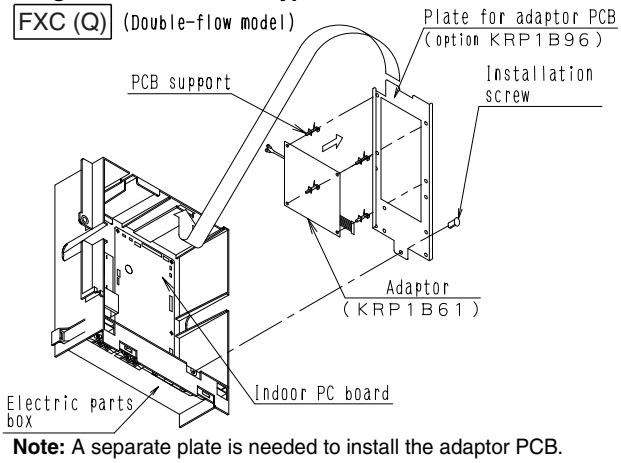

Note: A separate plate is needed to install the adaptor PCB.

Floor-standing type

FXL (Q)

FXN (Q)

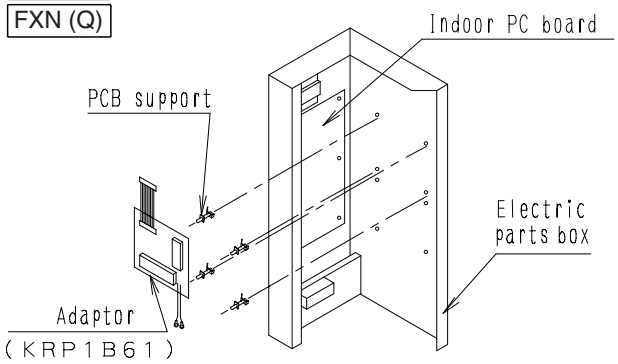

Ceiling mounted low silhouette duct type

FXYD-KA

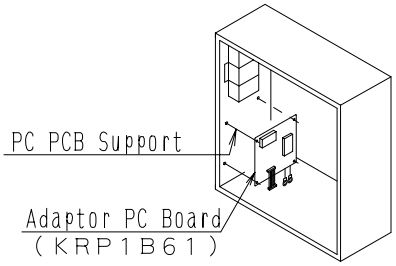

Note: Installation box is necessary for second adaptor

C: 2PA61563D

7.2 KRP1BA54 / KRP1B56 / KRP1BA57 / KRP1BA59

Item \ Model		KRP1BA54	KRP1B56	KRP1BA57	KRP1BA59	KRP1B51
Dimensions	mm	85×49				
Length of lead wire	mm	250	2,000	1,500	500	400
Component parts		Wiring adaptor printed circuit board. Printed circuit board support. Clamp. Installation manual.				

Accessories Check if the following accessories are included in the kit.

Adaptor
× 1 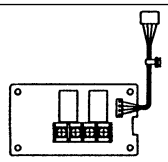

Printed circuit board support	× 4
Clamp	× 3
Installation manual	× 1

NOTE
- Kits vary according to applicable models.
- A special adaptor fixing plate and box are required for the following models.
  FXZQ, FXD(Q), FFQ·····KRP1BA101
  FXF-L·····KRP1DA98
  FH(Y)C·····KRP1B98
  FXHQ, FHQ, FH(Y)·····KRP1CA93
  FV(Y), FVQ·····KRP4AA95

7.2.1 Names of Parts

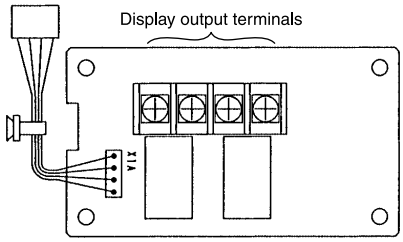

7.2.2 Electric Wiring Work

- Refer to the WIRING DIAGRAM attached to the indoor unit before attempting to wire.
  [Make sure wires to units do not pass over the printed circuit board when wiring]
- Wire the adaptor to the indoor unit as described below.

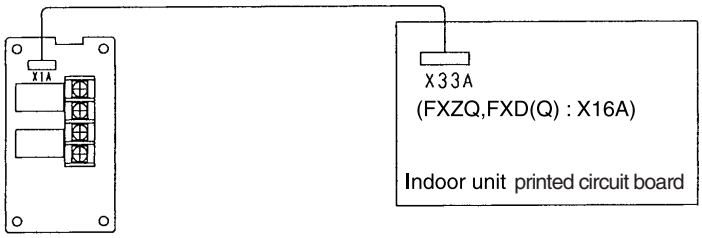

○ Fetching the operation display signal

• Attaching an hour meter

Output is generated at the contact while the compressor is running.

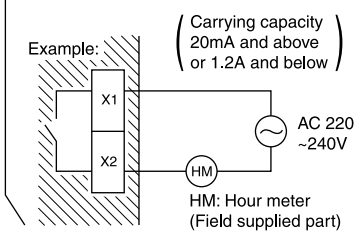

• Fan ON display

Output is generated at the contact while the fan is running.

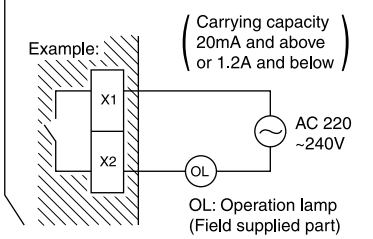

C: 1PA60037G

7.2.3 Installation

- Installation differs according to models as shown below.
  Do not bundle low and high voltage wires together.
- Bundle any access wires with the attached clamps so as to keep loose wirings off the indoor unit printed circuit board.

Ceiling mounted cassette type

FXF
(Multi-flow type)

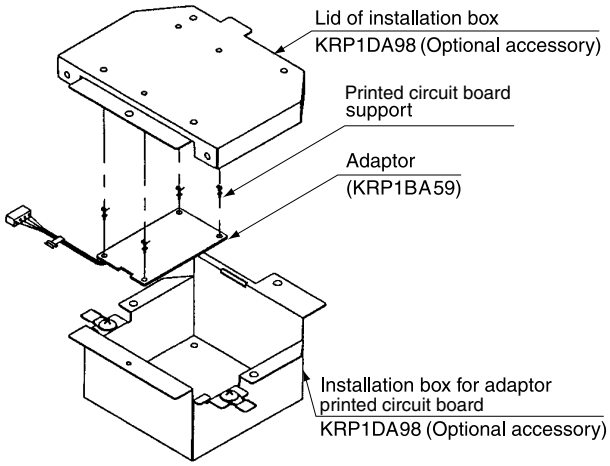

Note: Installation box for adaptor printed circuit board is required to install the adaptor.

Ceiling suspended type

FXH(Q)
FHQ FH(Y)

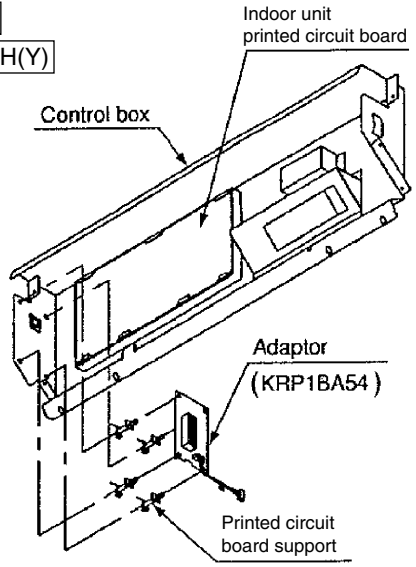

Ceiling mounted cassette type (Compact multi flow)
Slim ceiling mounted Duct type

FXZQ FFQ
(Compact Multi-flow type)
FXD(Q)
(Slim ceiling mounted Duct type)

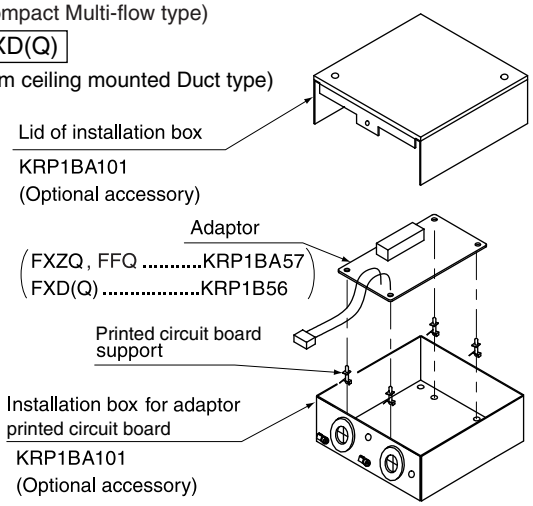

Note: Installation box for adaptor printed circuit board is required to install the adaptor.

Ceiling mounted built-in type

FBQ-B

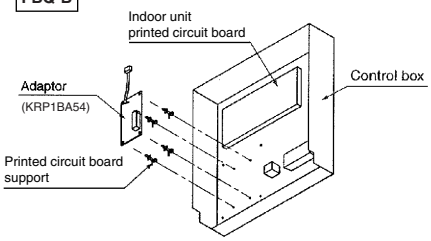

Ceiling mounted built-in type

FH(Y)B

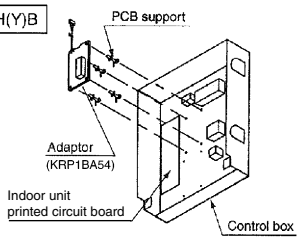

Ceiling mounted cassette type

FH(Y)C
(Multi flow type)

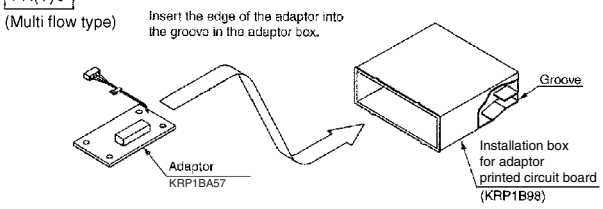

Ceiling mounted cassette type

FH(Y)K (Corner type)

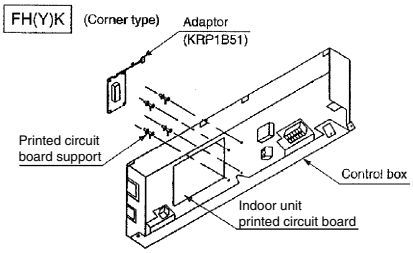

Floor standing type

FV(Y)
FVQ

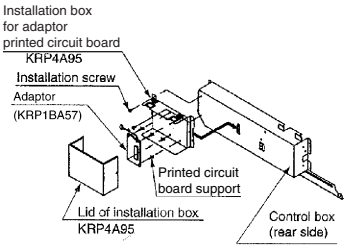

Note: Installation box for adaptor printed circuit board is required to install the adaptor.

C: 1PA60037G

7.3 KRP1C63

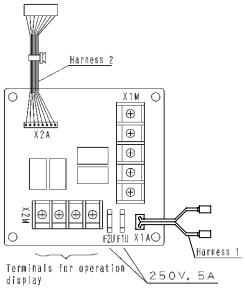

Item / Model	KRP1C63
Dimensions (mm)	100×100
Length of lead wire (mm)	Harness1: 1080, Harness2: 645
Component parts	Wiring adaptor Printed Circuit Board, Printed Circuit Board Support, Clamp × 3, Installation Manual

Accessories Check if the following accssories are included in the kit.

Adapter	Wire harness 1	Wire harness 2	PCB support	Clamp	Installation manual
×1	×1	×1	×4	×3	×1

Note

- Keep in mind that a kit changes with application models.
- An adapter attachment box is required for the following model separately.

FXFQ-S, FXFQ-P, FXFQ-LU, FCQ-K(A), FCQ-LU, FCQN-K・・・・・・・・・KRP1H98

1 NAME OF PART

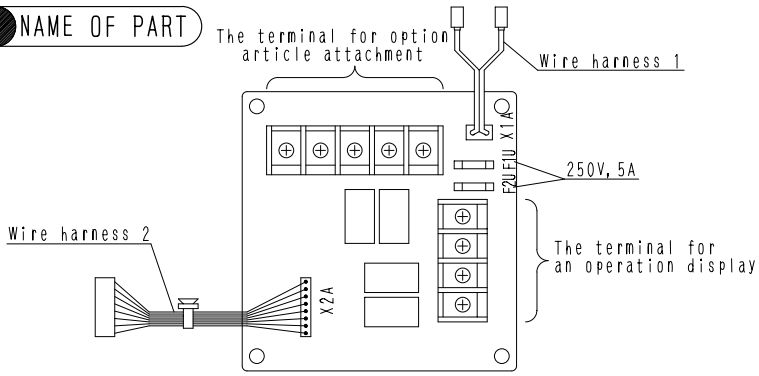

2 ELECTRIC WIRING

- Please be sure for electric wiring to do the upper work of reference of the electric wiring figure of pasting on an indoor unit.

[Be careful for wiring to apparatus not to pass along a substrate top at the time of wiring.]

- Please wire an indoor unit main part in the following way.

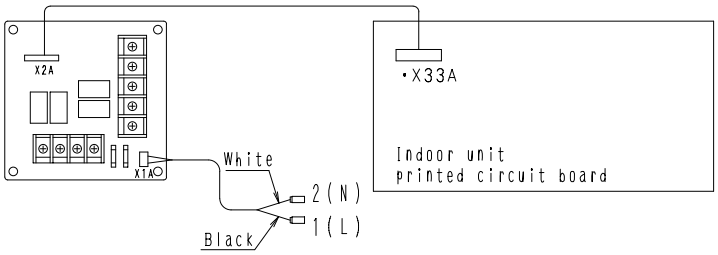

The connection with the terminal base for wiring between units should use a round shape pressure connection terminal.
When you cannot use it unavoidably, Please be sure to keep the following matter.

C: 2P178844B

≪Attention at the time of power-source wiring≫

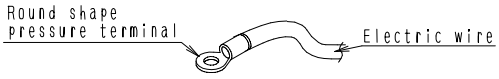

- Please do not connect two diameter electric wires of different to the terminal base for wiring between units.
  (There is fear of unusual generation of heat according to looseness of an electric wire etc.)
- It connects certainly using a predetermined electric wire, and external force wiring in a terminal part. Please fix not to be added.
- Please use a proper driver for bolting of a terminal screw thread. The driver of small size damages a screw-head part, and cannot perform proper bolting.
- A screw thread may be damaged if a terminal screw thread is bolted too much.
- Refer to the right table for the torque with a bunble of a terminal screw thread.

Torque with a bunble (N・m)	
The terminal base for wiring between units	1.18～1.44

○Fetching the operation display signal.

●Attaching the operation display signal ●Fan ON display

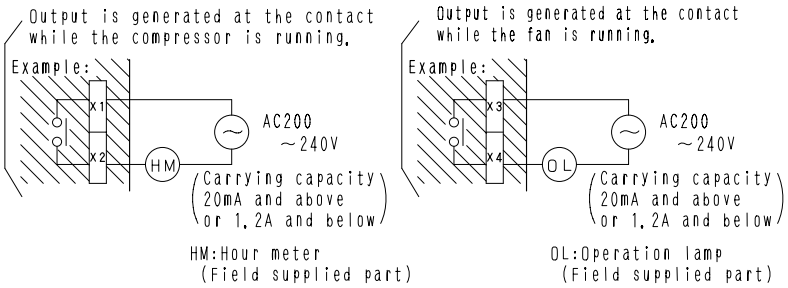

③ INSTALLATION

- Means of attachment are shown below.
  However, a strong electric wire and a weak-electric-current line should not band together simultaneously.
- Please remain so that wiring does not wire on the indoor PCB, and bundle wiring of a part by attached Thailand Rapp.

FXFQ-S
FXFQ-P
FXFQ-LU

FCQ-K(A)
FCQ-LU
FCQN-K

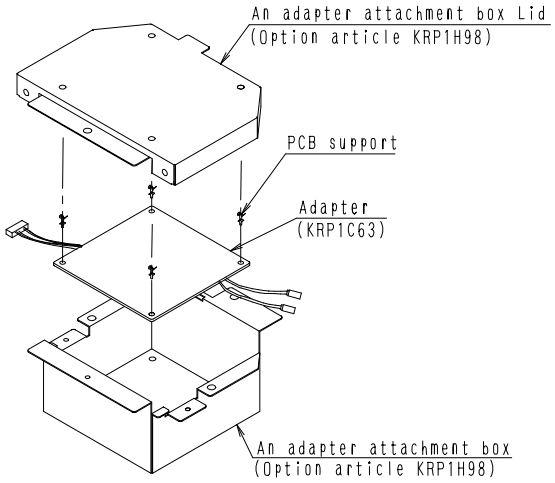

NOTE) An adapter attachment box is required for attachment separately.
- Please use substrate support of attachment by an adapter and attach in the adapter attachment box cover side.

C: 2P178844B

7.4 KRP1C64

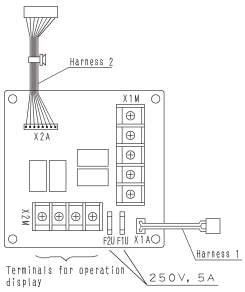

Item	Model	KRP1C64
Dimensions	mm	100×100
Length of lead wire	mm	400×2 (harness1: 400, harness2: 400)
Component parts		Wiring adaptor printed circuit board, Printed circuit board support × 4, Clamp × 4, Installation manual

Caution

- This unit is wiring adaptor for indoor unit of ceiling-mounted duct type. Check the indoor unit model name. (As below mentioned table)
- This unit is needed to plate for adaptor PC separately.
- Refer to installation manual of plate for adaptor PC, while installing this unit.

Adaptor for wiring	Indoor unit	Plate for adaptor PC kit
KRP1C64	FBQ-DV1, FBQ-DAVET FXMQ-PVE, FBQ-DV2S	KRP4A96

Accessories

- Check if the following accessories are included in the kit.

< Remarks >

Don't throw away all parts until finished installation, because these parts are necessary for installation work.

Name	Adaptor for wiring	Harness 1	Harness 2	PC board support	Clamp	Installation manual
Shape						
Quantity	1	1	1	4	4	1

< Caution >

- All wiring must be performed by an authorized electrician.
- For electric wiring work, refer to also "Wiring diagram" attached to the control box lid and this manual.
- All wiring must be worked after shutting down power supply.
- All field supplied parts and materials and electric works must conform to local codes.
- A circuit breaker capable of shutting down power supply to the entire system must be installed.

C: 3P226298

1 NAMES OF PARTS

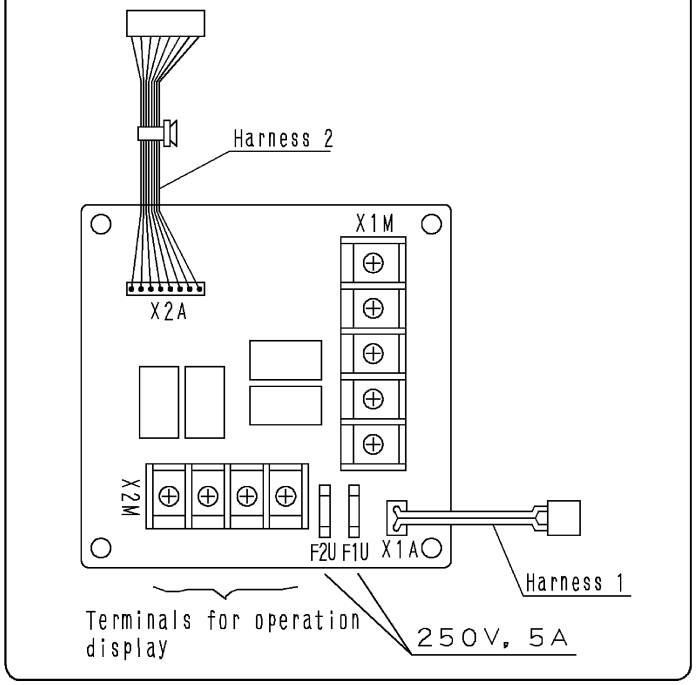

2 ELECTRIC WIRING

- Refer to the WIRING DIAGRAM attached to the indoor unit before attempting to wire.

  [Make sure wires to units do not pass over the PC board when wiring.]

- Wire the adaptor to the indoor unit as shown below.

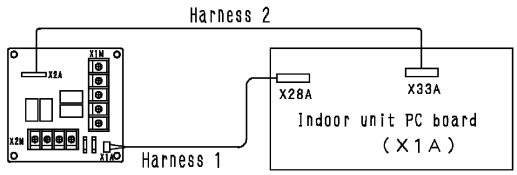

Fetching the operation display signal

- Attaching an hour meter
- Fan ON display

Output is generated at the contact while the compressor is running.

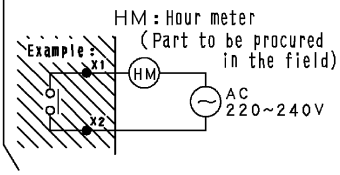

Output is generated at the contact while the fan is running.

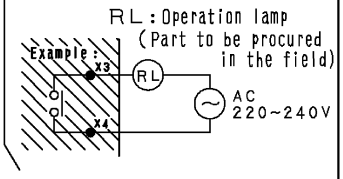

3P226298

❸ INSTALLATION

- Do not bundle low and high voltage wires together.
- Bundle any axcess wires with the attached clamps so as to keep loose wirings off the indoor unit PC board.
- Set up adaptor to the plate refer to below figure direction.

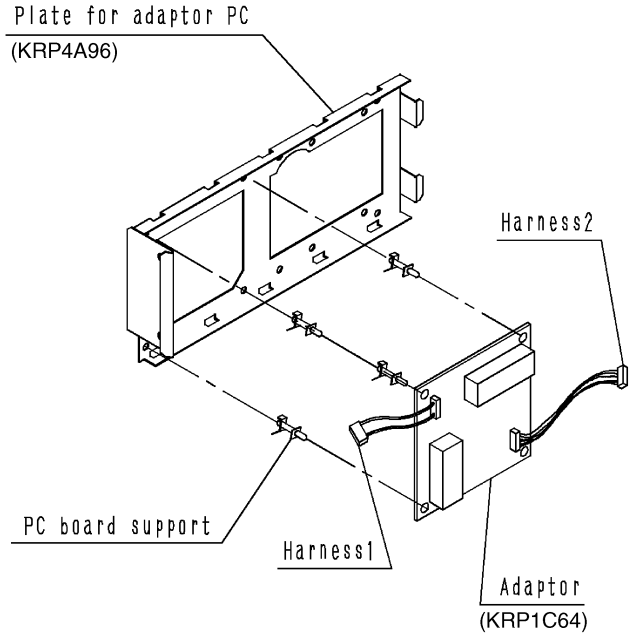

C: 3P226298

7.5 KRP1C67

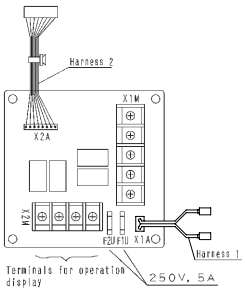

Item	Model	KRP1C67
Dimensions	mm	100×100
Length of lead wire	mm	Harness1: 900, Harness2: 1500
Component parts		Wiring adaptor printed circuit board, Printed circuit board support, Clamp × 3, Installation Manual

Accessories

- Check if the following accessories are included in the kit.

〈Remarks〉

Don't throw away all parts until finished installation, because these parts are necessary for installation work.

Name	Adaptor for wiring	Harness 1	Harness 2	PCB support	Clamp	Installation manual
Shape	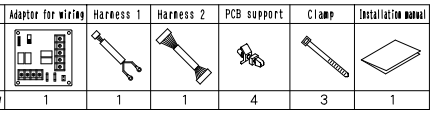					
Quantity	1	1	1	4	3	1

〈Caution〉

- All wiring must be performed by an authorized electrician.
- For electric wiring work, refer to also "Wiring diagram" attached to the indoor unit and this manual.
- All wiring must be worked after shutting down power supply.
- All field supplied parts and materials and electric works must conform to local codes.
- A circuit breaker capable of shutting down power supply to the entire system must be installed.

❶ NAMES OF PARTS

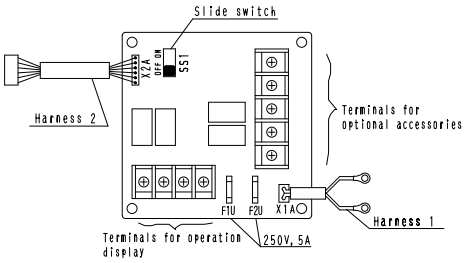

❷ ELECTRIC WIRING

- Refer to the WIRING DIAGRAM attached to the indoor unit before wiring work.

〔Make sure not to pass wires over PCB when carry out the wiring work.〕

- Wire the adaptor to the indoor unit as shown below.

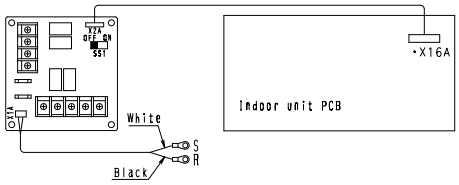

Note) Slide switch is OFF at all times.

2P351781-1

Caution for power supply wiring

- For connection to the terminal block between the units, use ring type crimp style terminals.
- Make sure to observe the following requirements.
- Do not connect wires of different sizes to the terminal block between the units.
- (Abnormal heating may occur if the wires are not tightened securely.)
- Use the required wires, connect them securely and fix these wires securely so that external force may not apply to the terminals.
- Use a proper screwdriver for tightening the terminal screws. If an improper screwdriver is used, it may damage the screw head and a proper tightening cannot be carried out.
- If a terminal screw is over tightened, it may be damaged.
- See following table for tightening torque of terminals.

Tightening torque(N・m)	
The terminal block between the units	1.18~1.44

Fetching the operation display signal

- Attaching an hour meter
- Fan ON display

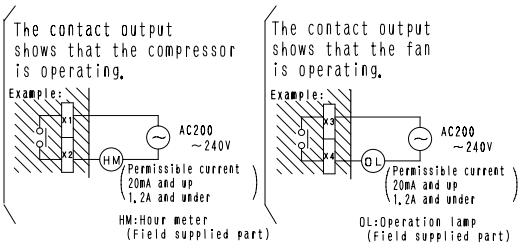

❸ INSTALLATION

- Do not bundle low and high voltage wires together.
- Clamp excess wires with provided clamp materials so that wires may not pass on the PCB.

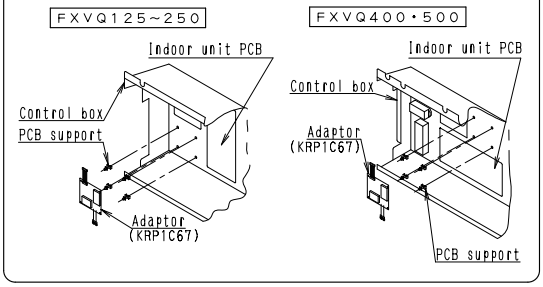

2P351781-1

8. Wiring Adaptor for Electrical Appendices (1) (2)

8.1 KRP2A61 / KRP2A62 / KRP2A53

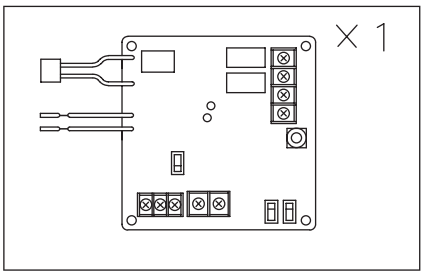

Item / Model		KRP2A53	KRP2A61	KRP2A62
Dimensions	mm	100×100		
Length of lead wire	mm	2,000	500	1,300
Component parts		Wiring adaptor printed circuit board. Printed circuit board support. Clamp. Installation manual.		

8.1.1 System Configuration

Zone Control

This adaptor is connected to the centralized line, and “all the air conditioners connected to the central control lines (F1, F2) are under unified control”.
(Unified control of a max. 64 groups of a max. 16 indoor units each. But, the max. indoor units are 128.)

This system requires the following parts.

- Wiring Adaptor for Electrical Appendices (1)
  ... KRP2A61 or KRP2A62 or KRP2A53
- Remote controller switches (For control)

...BRC1C62
BRC2C51
BRC3A61
} Per group

(Ex.) Zone control for 8 units of FXFQ63PVE (control groups of 4, 3 and 1)

KRP2A62×1 kit
BRC1C62×3 kits
} 1 set required for each group.

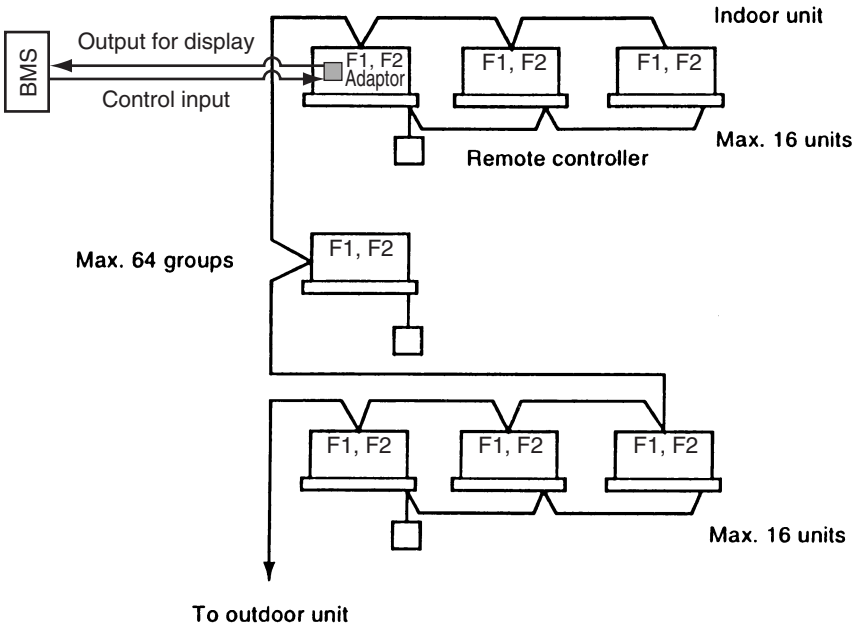

Note:

1. Individual indoor units connected to the centralized line cannot be displayed individually on the BMS.

C: 1PA63641M

8.1.2 Part Names and Functions

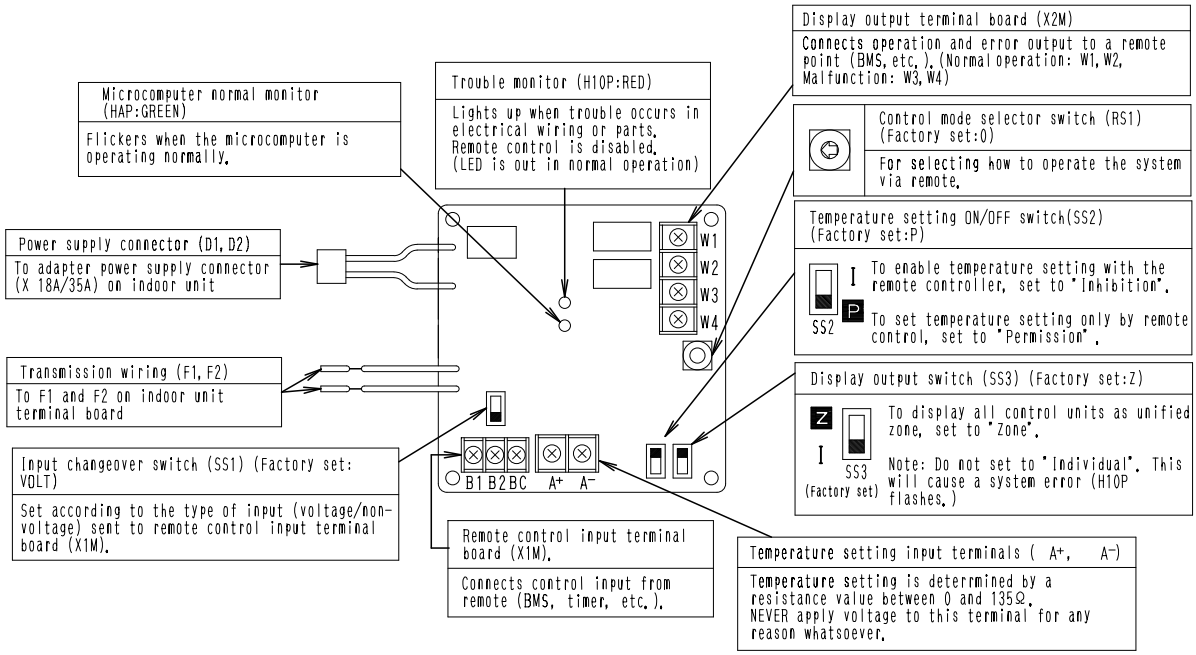

8.1.3 Installation Manual

Ceiling Mounted Cassette Corner Type

FXK(Q)

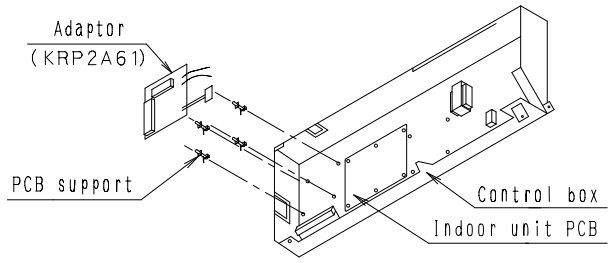

Ceiling Mounted Cassette Type (Double-Flow)

FXC(Q)

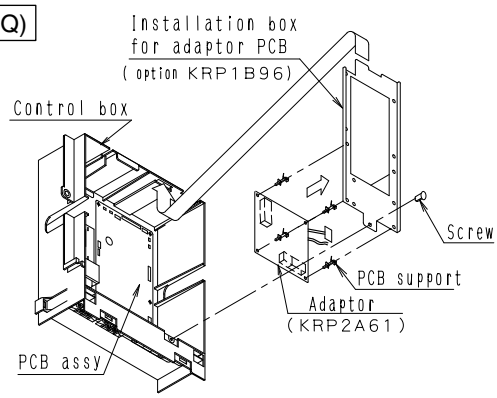

NOTE :Installation box for adaptor PCB is required to install the adaptor.

Ceiling Mounted Cassette Type

FXFQ-S
FXFQ-P (Round-flow)
FXFQ-LU

FXF (Multi-flow)

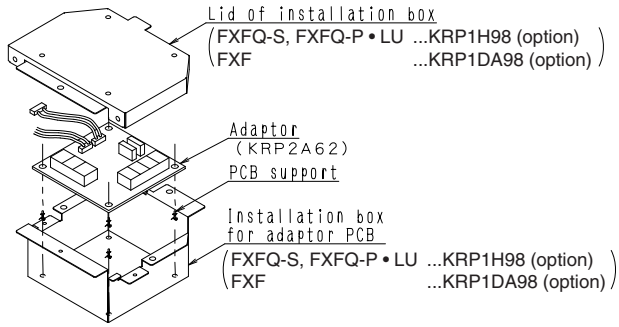

NOTE) Installation box for adaptor PCB is required to install the adaptor.

Ceiling Mounted Cassette Type (Compact Multi-Flow)

FXZQ

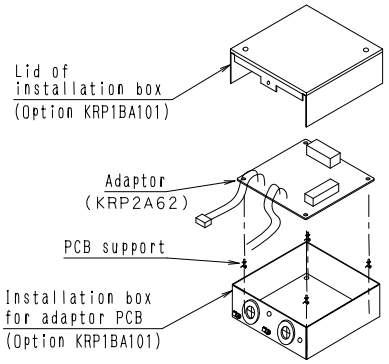

NOTE :Installation box for adaptor PCB is required to install the adaptor.

C: 1PA63641M

Ceiling Mounted Duct Type

FXMQ20~140P

See Installation Manual of "**KRP4A96**".

FXM20~140

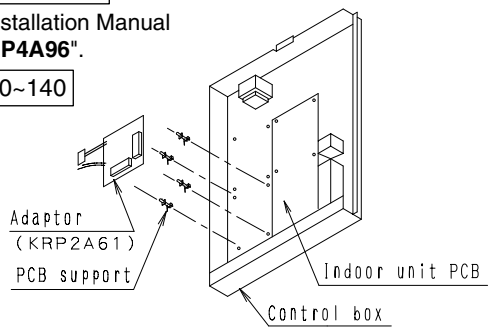

FXM(Q)200 · 250

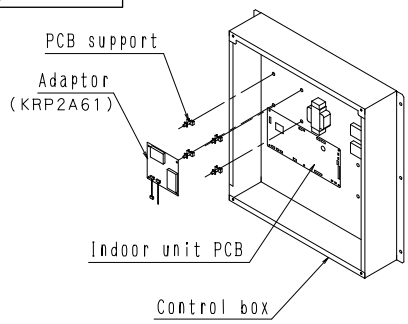

Ceiling Mounted Built-In Type
Ceiling Mounted Built-In Type (Rear Suction)

FXS
FXSYQ
FXYB

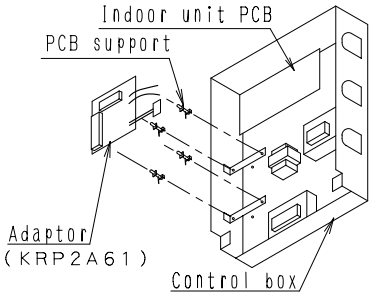

Note :
Installation box is necessary for second adaptor (FXS (Q)).

Ceiling Suspended Type

FXH(Q)

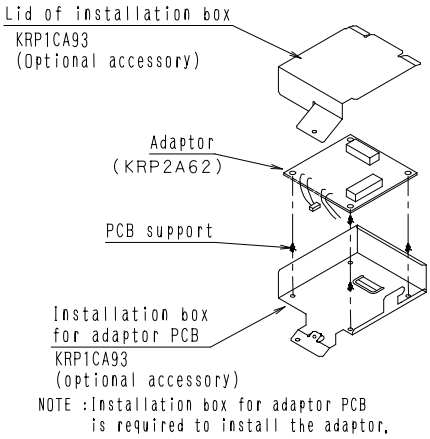

Floor Standing Type

FXL(Q)
FXN(Q)

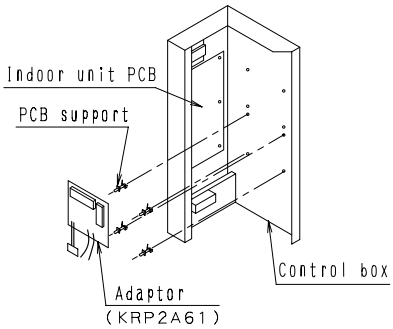

Slim Ceiling Mounted Duct Type

FXD(Q)

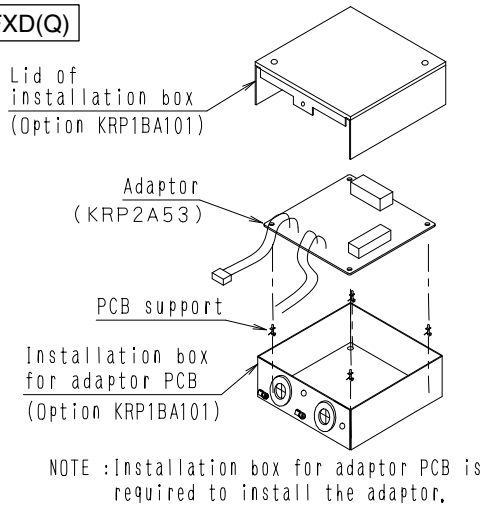

Wall Mounted Type

FXA(Q)

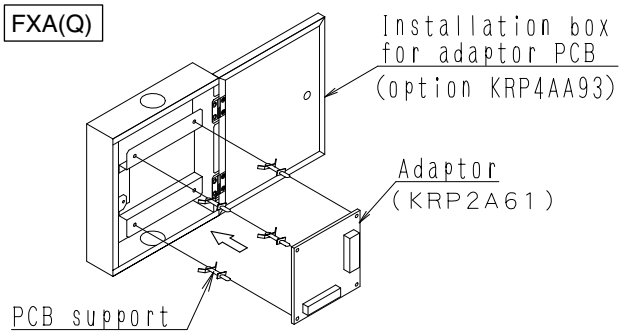

Ceiling Mounted Low Silhouette Duct Type

FXYD-KA

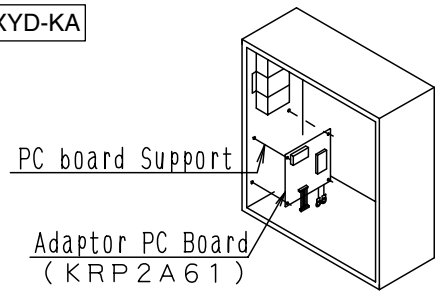

NoTE:Installation box is necessary for second adaptor.

C : 1PA63641M

Floor Standing Duct Type

FXVQ125~250

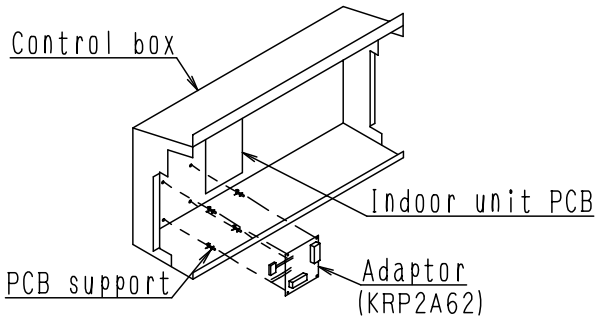

FXVQ400 · 500

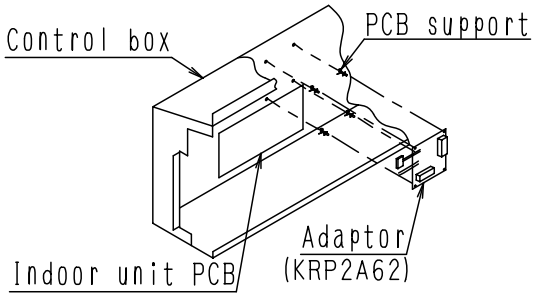

C : 1PA63641M

8.1.4 Electric Wiring Work and Initial Setting

<Electric Wiring Work>

1. First, wire between the indoor and outdoor units, then to the separate power supply, and between the indoor units and the remote controllers. Then, check wiring is correct. (If wanting group control by remote controller, check transmission wiring.) For details, see the installation manual of the indoor and outdoor units.

2. Next, wire between the wiring adaptor for electrical appendices (1) and the indoor units. For details, see **Wiring to indoor units**.

3. Finally, wire between external units such as BMS, and make the necessary settings. For details, see **Wiring to external units (BMS)**.

Note:
It is not necessary to set address No. for centralized control.
(Setting is automatic.)

Wiring to the adaptor

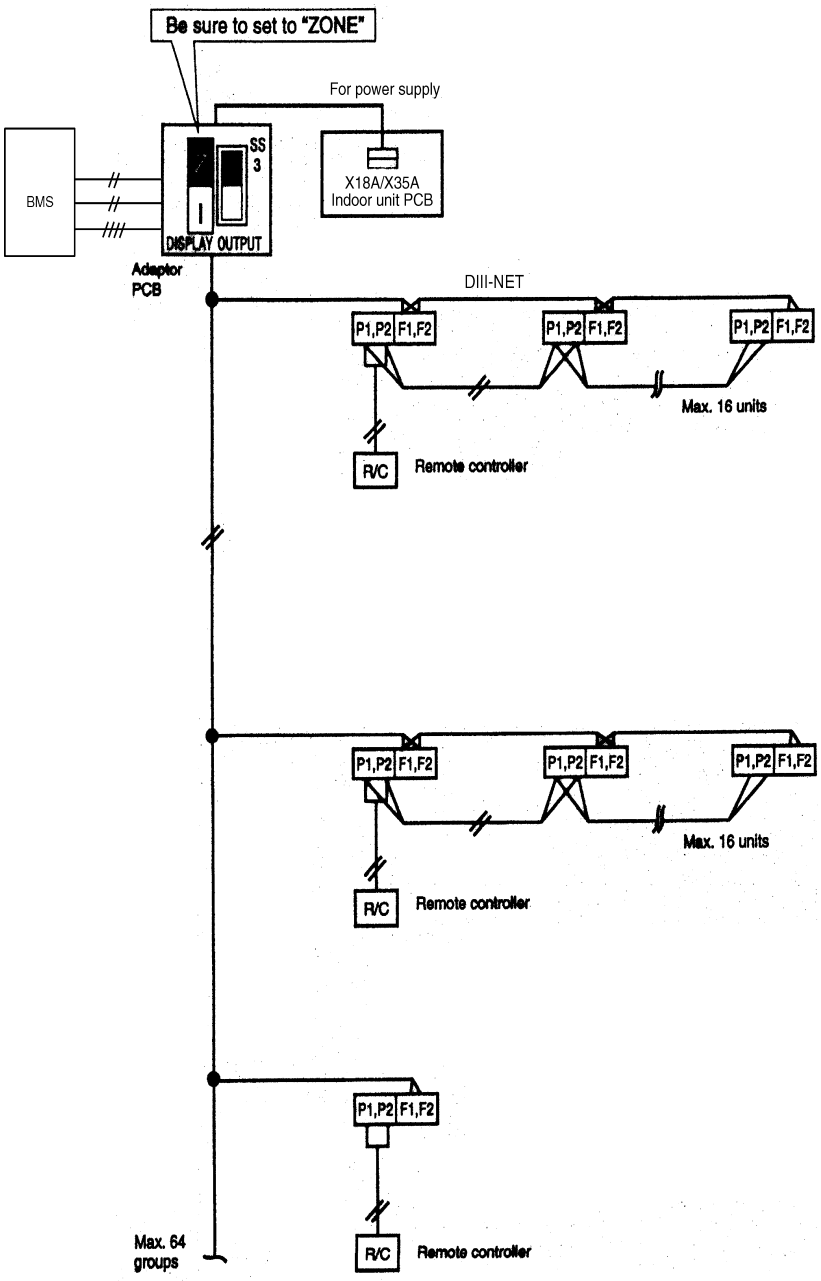

C: 1PA63642C

<Initial Setting>

1. Remote control input (Operation control)

Wire as described below. Wiring differs depending on whether using a voltage or non-voltage input.

■ For voltage input

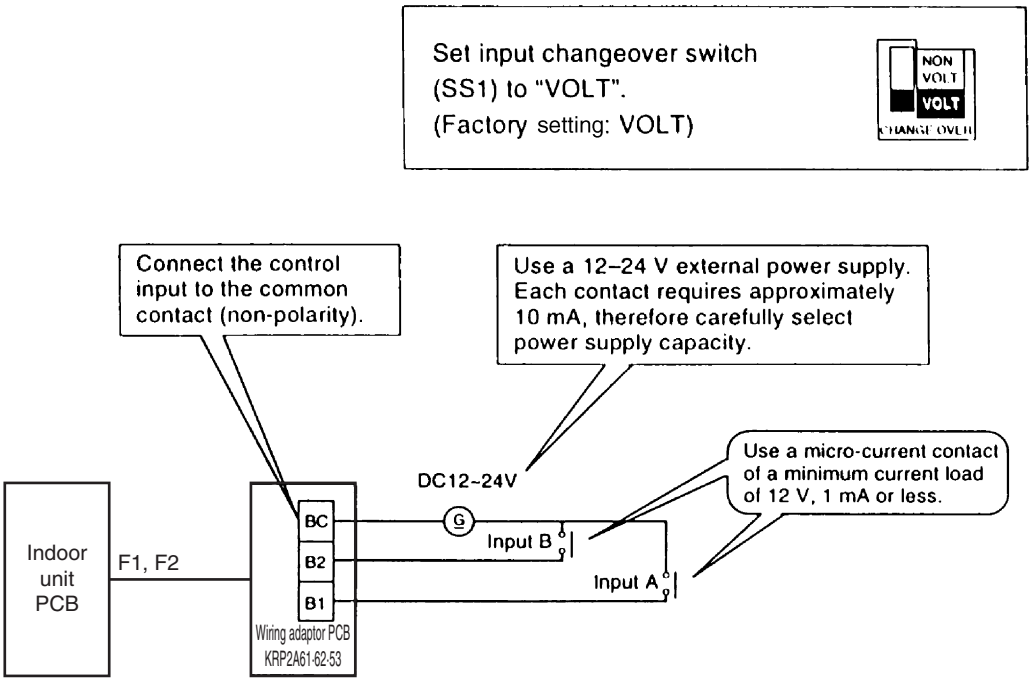

■ For non-voltage input

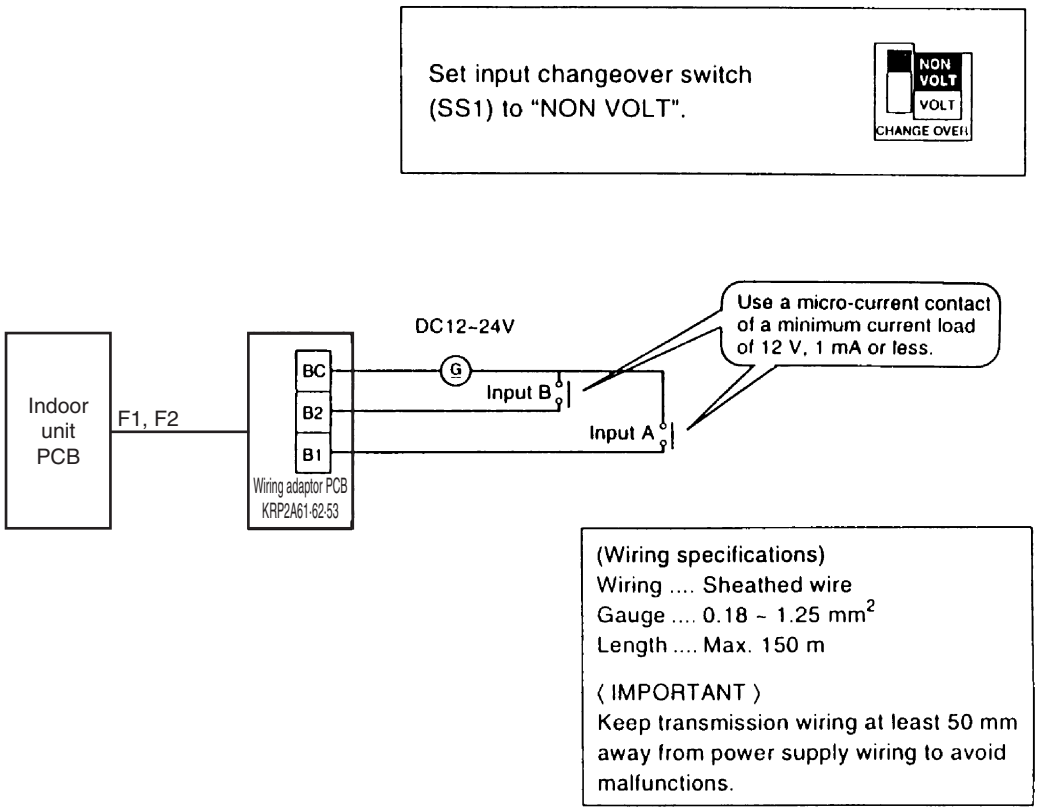

C: 1PA63642C

2. Setting control mode selector switch (RS1)

Using control mode selector switch (RS1), select the control mode as described below.

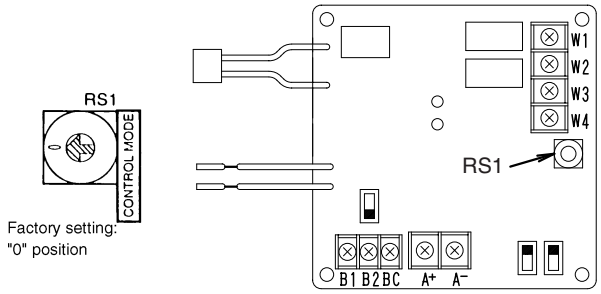

(1) When operating with only individual display function

Position	Function
0	Individual Display (Input Ignored)

(2) When operating with constant input from A

CONTROL MODE Position RS1	Function	Input A ON		Input A OFF		Input B ON	
		Operation or not of indoor unit	From Remote controller	Operation or not of indoor unit	From Remote controller	Operation or not of indoor unit	From Remote Controller
1	Remote Control Rejection	ON	Rejection	Input A / Input B / B1 / B2 / BC			Rejection
2	Central Priority	ON	Acceptable				
3	Stop by Remote controller Acceptable	ON	Only Stop acceptable				
4	Remote controller acceptance / rejection	Permit	Acceptable	OFF	Rejection	Forced OFF	

Note:

- Input B is for forced-OFF. When ON, stop + remote controller is rejected, and input A is ignored. When OFF, even if A is ON, the contents of when input A is ON, are not achieved. Input A must therefore be re-input.

(3) When operating with momentary input from A
(Use a momentary input of ON time 200 milli-sec. or longer.)

Position	Function	Input A ON		Constant Input B ON (Input A is ignored)	
		Operation or not of indoor unit	From Remote controller	Operation or not of indoor unit	From Remote controller
5	Remote Control Rejection	ON/OFF	Rejection	Forced OFF	Rejection
6	Last command Priority	ON/OFF	Acceptable		

- For demand control from input B

Position	Function when input A is ON	Function when input B is ON
C	Remote controller rejected (Same as position “5”)	Forced thermostat OFF command
D		Forced temperature shift command
E	Last command priority (Same as position “6”)	Forced thermostat OFF command
F		Forced temperature shift command

- Forced thermostat OFF command
  Forces indoor unit to operate the fan only.
- Forced temperature shift command
  The indoor unit operates at 2°C higher (cooling) or 2°C lower (heating) than the set temperature.

Note:

- In zone control, operation is displayed as long as one indoor unit is running. When in the last command priority mode, some units are not operating while ON.
- In such case, even if input A is ON, the unit and all other units in the same zone will stop.

C: 1PA63642C

(4) When operating with dual momentary inputs from A and B (Use a momentary input of 200 milli-sec. or longer.)

Position	Function	Input A ON		Input B ON	
		Operation or not of indoor unit	From Remote controller	Operation or not of indoor unit	From Remote controller
7	Remote Control Rejection	ON	Rejection	OFF	Rejection
8	Central Priority	ON	Acceptable		
9	Stop by Remote controller Acceptable	ON	Only Stop acceptable		
A	Remote controller acceptance / rejection	Permit	Acceptable		
B	Last command Priority	ON	Acceptable	OFF	Acceptable

Note:

- Doing constant input A with position 7-A, it will be forced OFF function (input A is ignored).
- Constant input cannot use for input B with position B.

C: 1PA63642C

Timing Chart for Each Control Mode by pulse input

Remote controller rejection

Position 7

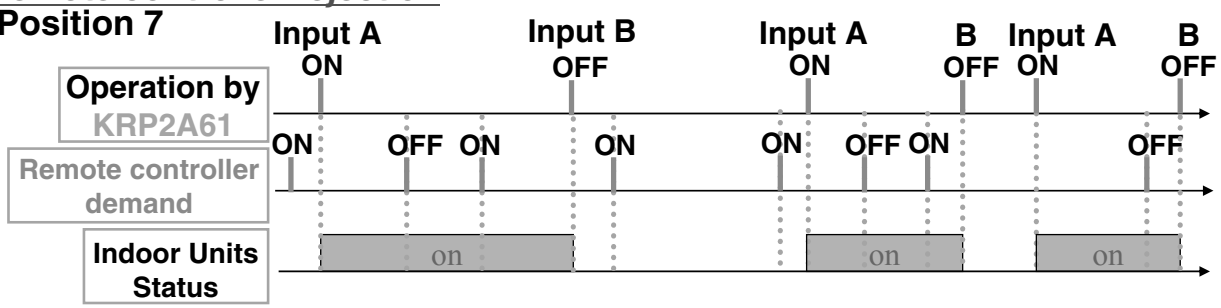

Stop by Remote controller Acceptable

Position 9

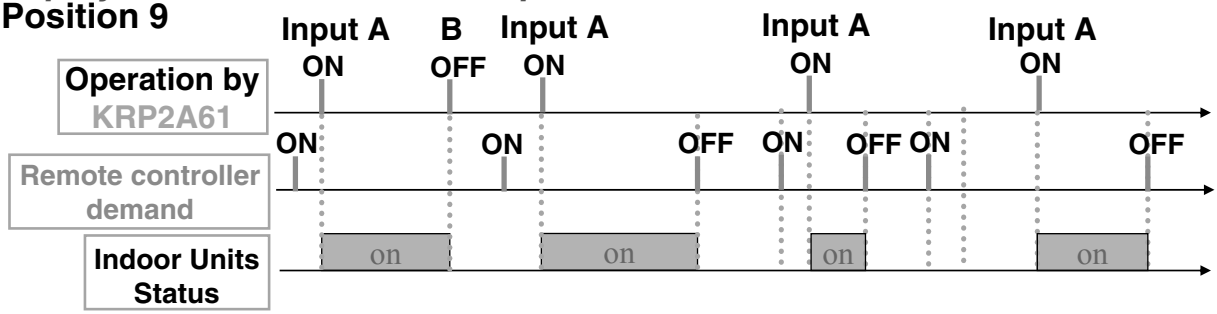

Central Priority

Position 8

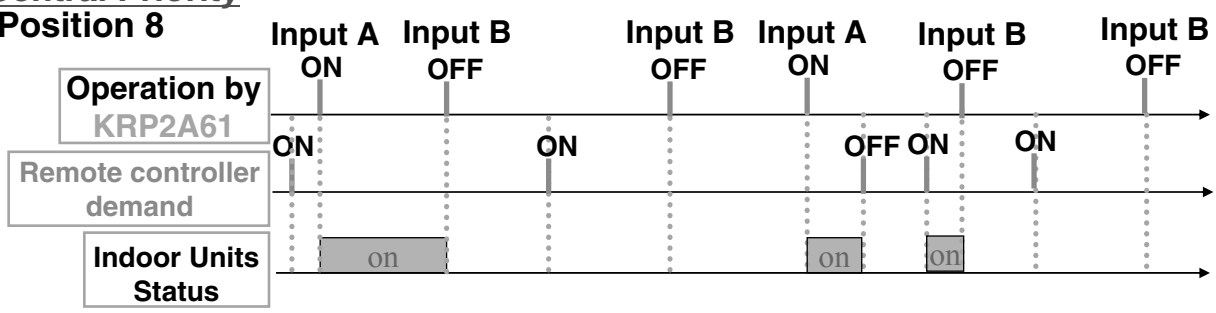

Remote controller acceptance / rejection

Position A

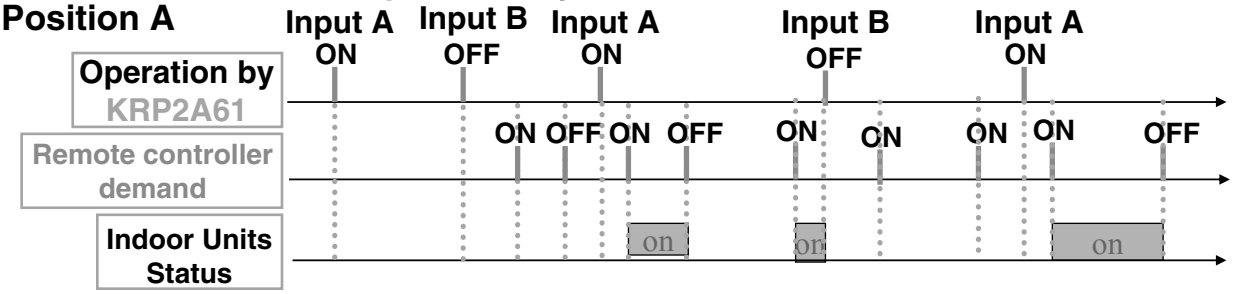

3. Temperature setting input

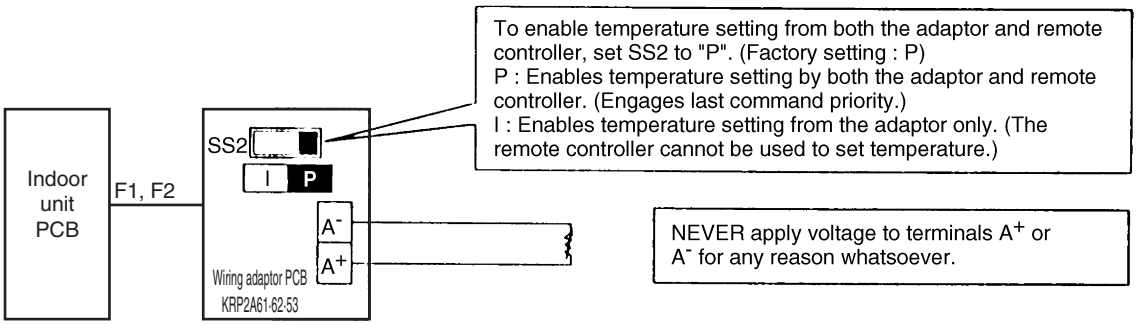

Temperature setting corresponds to resistance values in the range of 0 to 135Ω. Their relationship is as shown below.

Temperature Setting (°C)	16	17	18	19	20	21	22	23	24
Resistance (Ω)	0.0~3.4	5.0~11.6	13.8~20.0	22.4~28.4	31.0~36.4	39.4~44.8	48.2~52.8	56.6~61.2	65.2~69.4

Temperature Setting (°C)	25	26	27	28	29	30	31	32
Resistance (Ω)	73.8~77.8	82.4~85.8	91.0~94.0	99.4~102.2	108.6~110.4	117.2~119.2	125.8~127.4	134.2~140.0

Note:
Wiring resistance included in above figures.

(Wiring specifications)
Wiring ... Sheathed wire
Gauge ... 1.25~2.00 mm²
Length ... Max. 70 m
(IMPORTANT)
Keep transmission wiring at least 50 mm away from power supply wiring to avoid malfunctions.

4. Output display signals

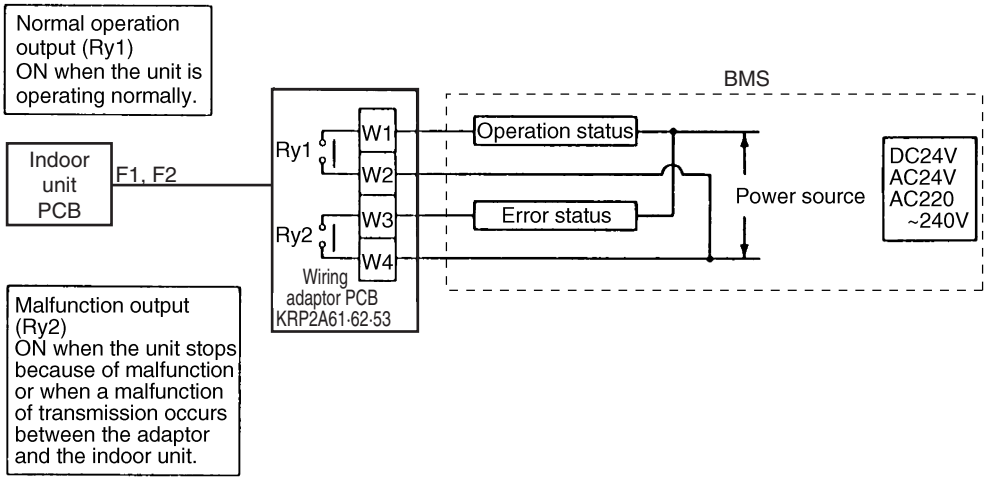

Operation output terminals (W1 and W2) and malfunction output terminals (W3 and W4) are non-voltage constant contact output.
(Allowed electric current per contact is between 10 mA ~ 3 A.)

Note:
If using a 220~240V power supply, keep transmission wiring at least 50 mm away from incoming power supply wiring.

Output / System	Both Ry1 and Ry2 OFF	Ry1 only ON	Ry2 only ON
Zone control	All zones OFF	At least one unit running normally, no malfunction	Even 1 unit stopped due to malfunction or malfunction of transmission between adaptor and indoor unit

Display output is described in the above table.

Note:
If rewiring F1 and F2 after running the system, turn ON power for 5 minutes, then turn it OFF and ON again. Changes to wiring can sometimes disable control from the wiring adaptor.

C: 1PA63642C

8.2 KRP4AA51 / KRP4AA52 / KRP4AA53 / KRP4A54

8.2.1 Function

This adaptor is an interface required to connect the indoor unit with the BAS. And by installing this adaptor in the indoor unit, it enables you to have various remote controls (ON/OFF, temperature setting, operation status display and malfunction display). One adaptor can control simultaneously the group of units (Max. 16 units) connected to the remote control wiring line (P1, P2).

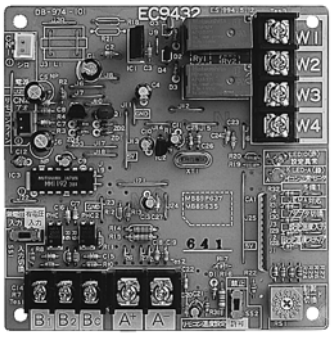

Type	BRC1C62	KRP4AA51/52/53 KRP4A54
Group/Zone / Item	One Group	One Group
ON/OFF	√	√
Temp. setting	√	√
Airflow rate setting	√	
Airflow direction setting	√	
Timer setting twice a day	√	
Mode setting	√	
Filter sign reset	√	
Inspection/Test operation	√	Operation & Error display only by lamps

Note:

1. This adaptor cannot be used together with centralized control equipment.
2. The model of adaptor differs according to the type of indoor unit to be installed.

Note:

1. Marked ▨ shows wiring adaptor for electrical appendices.
2. Marked ⬚ indicates the same control range.
3. The wiring adaptor for electrical appendices (2) can control simultaneously the group of the units (Max. 16 units) connected to the remote control wiring line (P1, P2). In another words, all the units connected between P1 and P2 terminal have the same control.

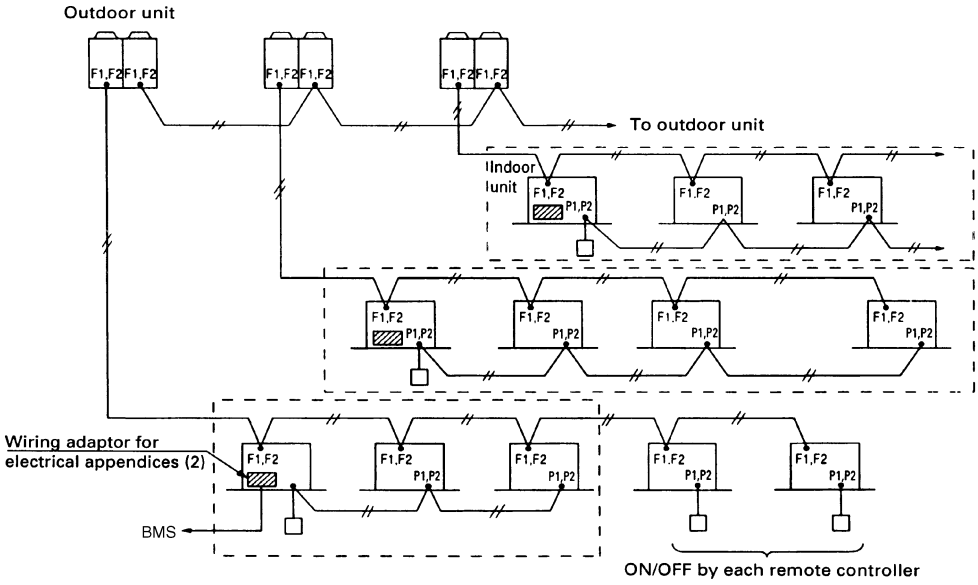

Applied Model

Series		Applicable
VRV Systems (*VRV* Inverter "K(A)" "K(U)" Series and later)		√
SkyAir Series ∗1		√
Room Air-Conditioner		
Packaged Air-Conditioners	FDYB-KA, FDYM-FA, FDY-KA ∗2	√
	FDBG, FDMG, FD	
	Other air-conditioners	
Heat Reclaim Ventilator (Note: BRC1C61, 62 etc. are required.)		√

Note:

∗1 FH-NU, FDBG-NU, FDBT-NU and FDMG-PU are not connected.

∗2 Installation box for adaptor printed circuit board is necessary.

8.2.2 Part Names and Functions

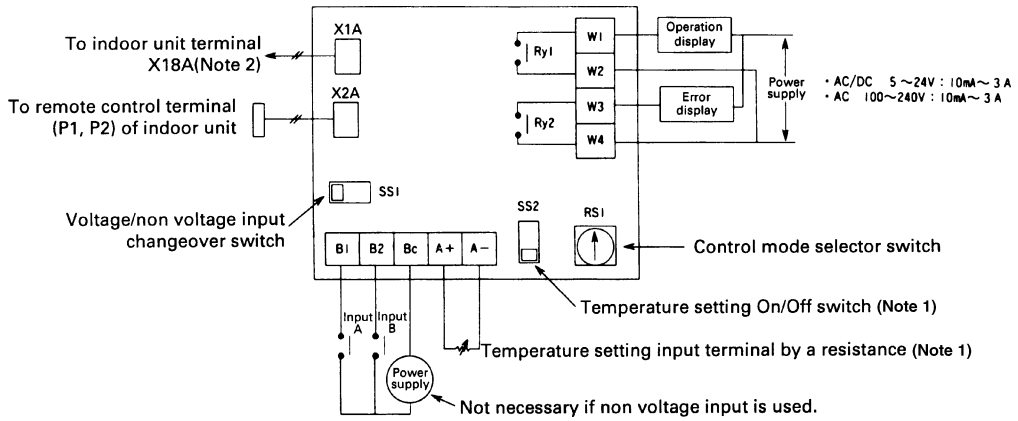

Note:

1. This is valid only for the indoor unit, which has a temperature setting function.
2. Terminal No. X18A is for the indoor unit of *VRV* system. For SkyAir series and other air-conditioner, connect to the relevant terminal for each units.

8.2.3 Installation Manual

Daikin Air Conditioner

Wiring adaptor for electrical appendices (2) (Group control adaptor) installation manual KRP4A51 • 52 • 53 • 54 KRP4AA51 • 52 • 53

Accessories Check if the following accessories are included in the kit.

Adaptor	Relay harness
× 1	× 1 each (1) (2)

PCB support	× 4
Clamp	× 3
Installation manual	× 8

FFQ, FXZQ, FXD(Q) KRP1BA101
FH(Y)C..... KRP1B98
FXF KRP1DA98
FCQ-K(A) • LU, FCQN-K, FXFQ-S • P • LU KRP1H98
FHQ~B, FXH(Q), FH(Y) KRP1CA93
FXC(Q)..... KRP1B96
FV(Y), FVQ KRP4AA95
FBQ~D(A), FXMQ~P..... KRP4A96
FXA(Q), FAQ71BVV1B, FAY71LVE KRP4AA93
FUY, FXUQ KRP1BA97

NOTES
- Kits vary according to applicable models.
- A special adaptor fixing plate and box are required for the following models.

1 SYSTEM OUTLINE

This kit enables remote control (ON/OFF control, temperature setting, operation display, error display) and can be used with the following systems though it cannot be used in conjunction with other optional controllers for centralized control.

1. Individual control (Each indoor unit is controlled individually.)

This system requires the following parts.
- Adaptor ..... KRP4A(A)51 • 52 • 53 • 54 — Any one kit
- Remote controller ..... BRC1B(A)51 • 52 • 61 • 62 or BRC1C517 • 61 or BRC2A51 or BRC3A61 — Any one kit
  (For operation control)

(Ex.) When individually controlling 8 FHYC71F units
KRP4A51 × 8 kits
BRC1B61 × 8 kits

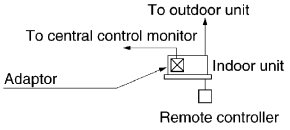

2. Group control (Multiple indoor units are controlled as a group.)

This system requires the following parts.
- Adaptor ..... KRP4A(A)51•52•53•54 — Any one kit
- Remote controller (For operation control) ..... BRC1B(A)51•52•61•62 or BRC1C517•61 or BRC2A51 or BRC3A61 — Any one kit

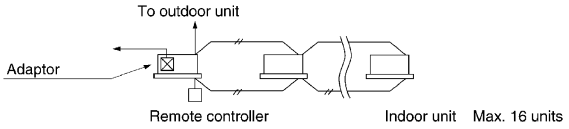

2 NAMES OF PARTS AND FUNCTION

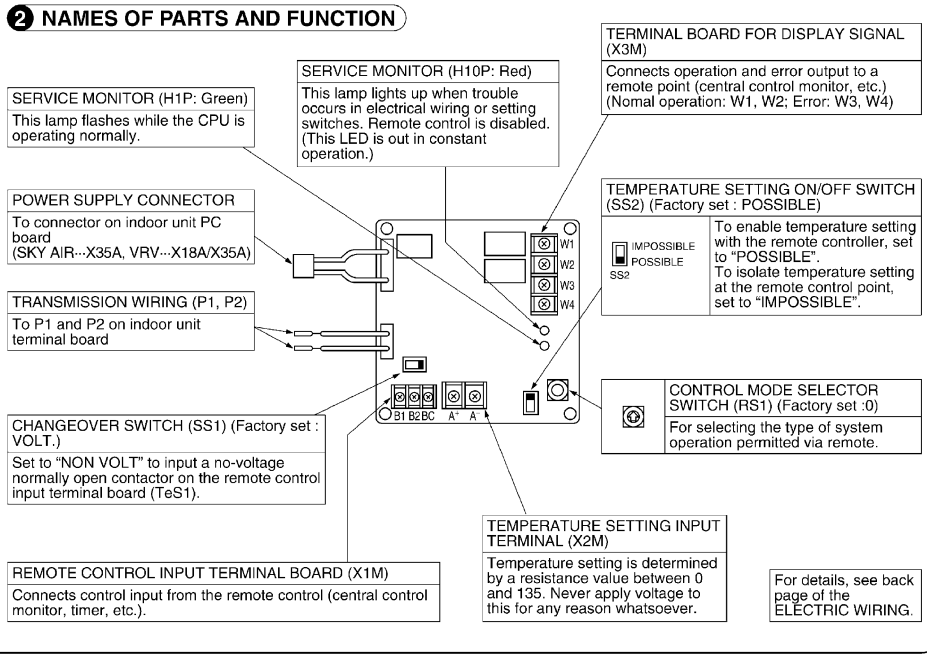

C: 1PA59889N

Ceiling Mounted Cassette Type (Compact Multi Flow)
Slim Ceiling Mounted Duct Type

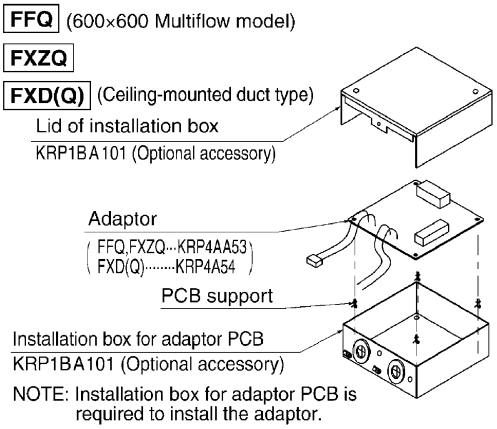

NOTE: Installation box for adaptor PCB is required to install the adaptor.

Ceiling Suspended Type

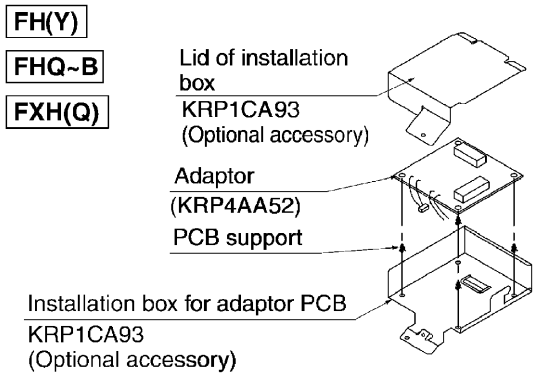

NOTE: Installation box for adaptor PCB is required to install the adaptor.

Ceiling Mounted Cassette Type (Double Flow)

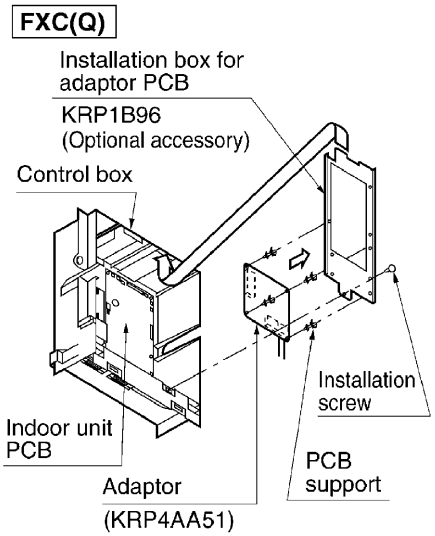

NOTE: A separate plate is needed to install the adaptor PCB.

Ceiling Mounted Cassette Corner Type

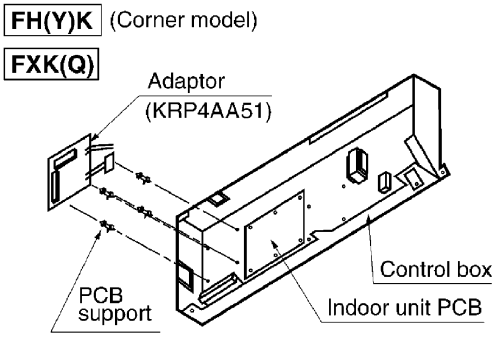

Ceiling Mounted Cassette Type

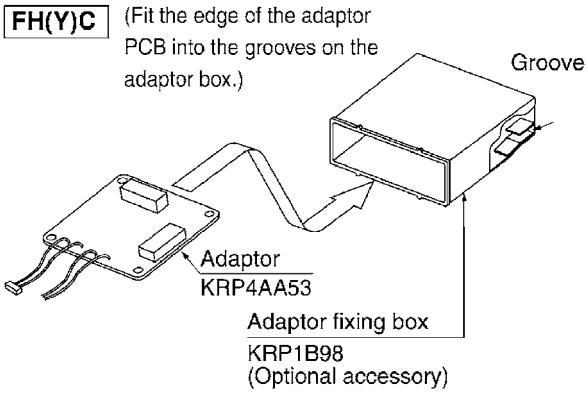

C: 1PA59889N

Floor Standing Type
Concealed Floor Standing Type

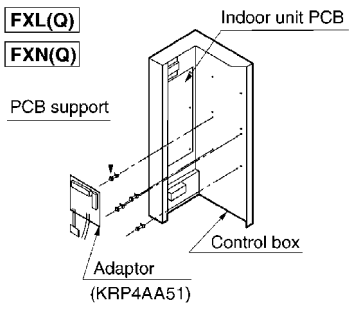

Floor Standing Type

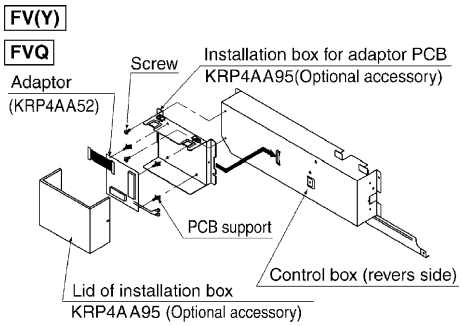

NOTE: Installation box for adaptor PCB is required to install the adaptor.

Ceiling Mounted Built-in Type

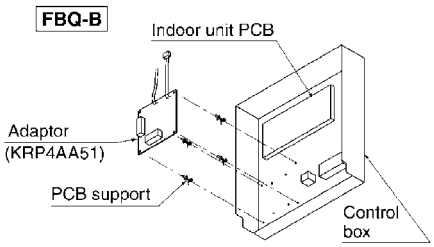

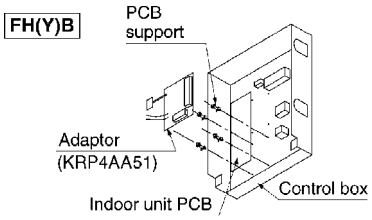

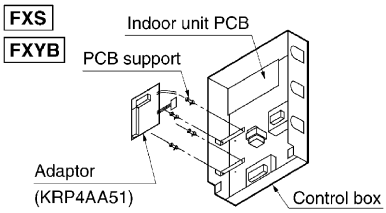

NOTE: Installation box is necessary for second adaptor (FXS).

Ceiling Mounted Duct-Type

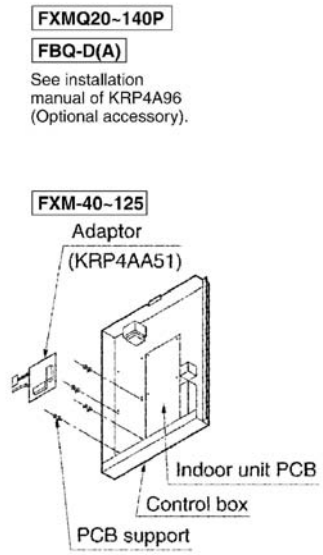

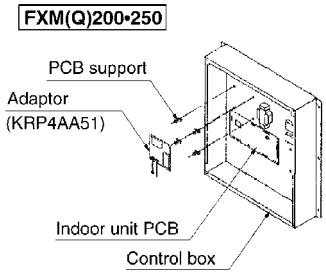

C: 1PA59889N

Ceiling Mounted Low Silhouette Duct Type

FXYD-KA

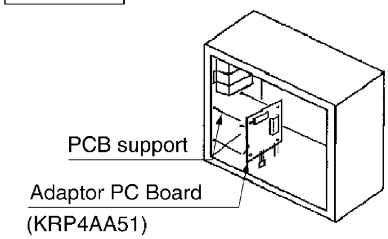

NOTE: Installation box is necessary for second adaptor.

Ceiling Suspended Cassette Type

FXUQ
FUY

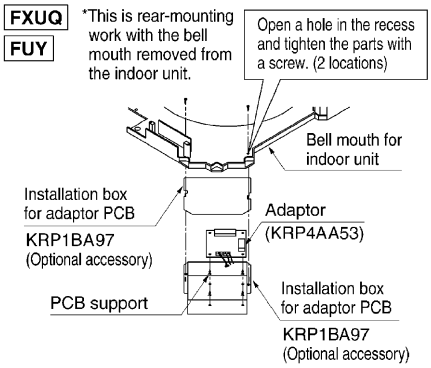

NOTE: Installation box for adaptor PCB is required to install the adaptor.

Wall Mounted Type

FXA(Q)
FAQ71BV
FAY-L

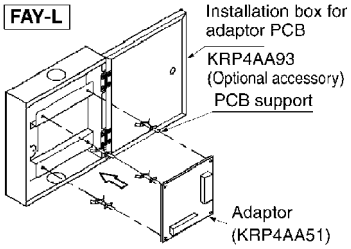

FAQ100BV
FA(Y)-F(A)

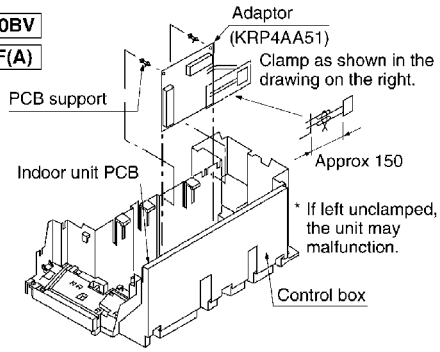

Ceiling Mounted Cassette Type

FCQ(N)~K(A)
FCQ-LU
FXF(Q)

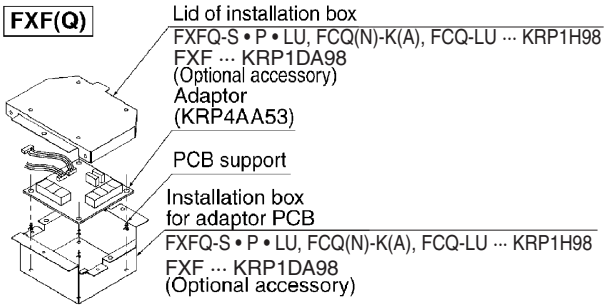

NOTE: Installation box for adaptor PCB is required to install the adaptor.

C: 1PA59889N

8.2.4 Electric Wiring Work and Initial Setting

1. Wiring

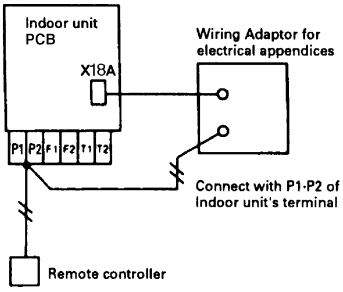

2. Depending on whether [voltage input] or [non voltage input], connect the wiring as shown below.

Input/Output for External Control

3. Depending on whether [voltage input] or [non voltage input], connect the wiring as shown below.

■ **Input with Voltage.**

Set the Voltage/Non voltage changeover switch (SS1) to VOLT.

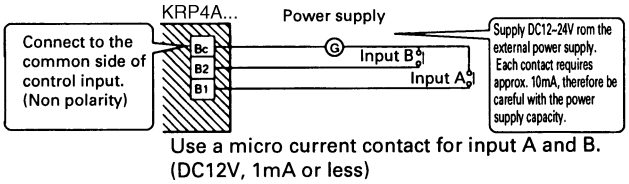

■ **Input with No Voltage.**

Set the Voltage/Non voltage changeover switch (SS1) to NON VOLT.

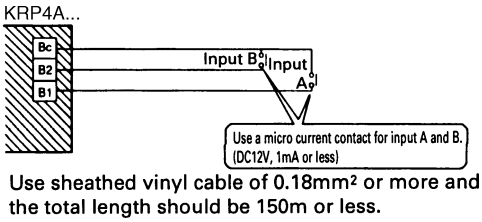

4. Display Signal Retrieval (Output)

The normal operation output terminals (W1, W2) and error output terminals (W3, W4) are non-voltage output contacts. (Permissive current is 10mA~3A per contact.)

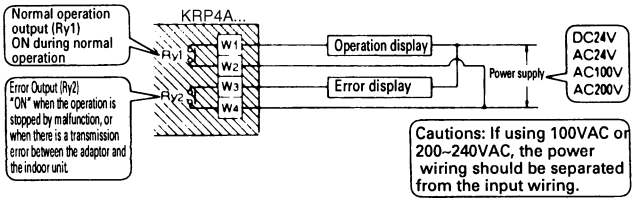

Output is as given below.

Output / System	Both Ry1 and Ry2 is OFF.	Only Ry1 is ON.	Only Ry2 is ON.
Group control	OFF	All normal operation	At least one unit is stopped due to error or transmission error between the adaptor and the indoor unit.

C: 1PA59890F

5. Temperature setting input

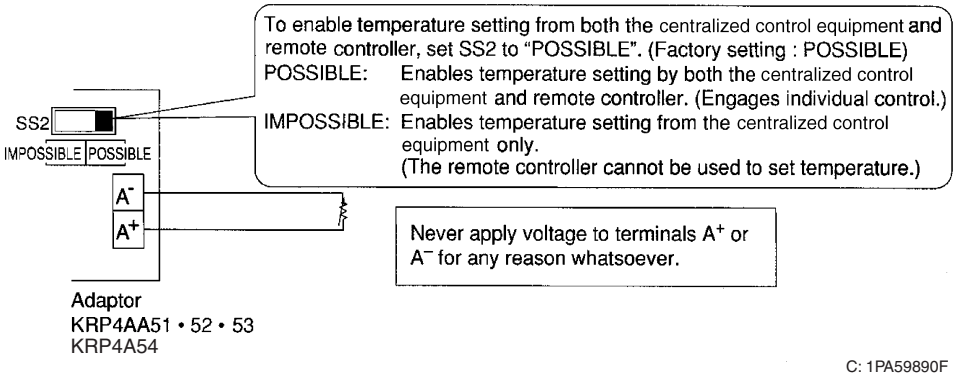

Temperature setting corresponds to resistance values in the range of 0 to 135Ω.
Their relationship is as shown below.

Relation between the setting temperature and the resistance are as follows.

Setting temperature (°C)	16	17	18	19	20	21	22	23	24	25	26	27	28	29	30	31	32
Resistance (Ω)	0.0 ~ 3.4	5.0 ~ 11.6	13.8 ~ 20.0	22.4 ~ 28.4	31.0 ~ 36.4	39.4 ~ 44.8	48.2 ~ 52.8	56.6 ~ 61.2	65.2 ~ 69.4	73.8 ~ 77.8	82.4 ~ 85.8	91.0 ~ 94.0	99.4 ~ 102.2	108.6 ~ 110.4	117.2 ~ 119.2	125.8 ~ 127.4	134.2 ~ 140.0

Note:

- The value of resistance includes the resistance of wiring.
- The setting temperature is limited within the setting range of indoor unit. If you set the temperature outside of the range by the adaptor, it controls at the nearest setting range.

6. Setting of control mode selector switch (RS1)

CONTROL MODE Position **RS1**	Function	Input A close		Input A open		Input B close (Input A is ignored)	
		Operation or not of indoor unit	From Remote controller	Operation or not of indoor unit	From Remote controller	Operation or not of indoor unit	From Remote controller
0	Input Ignored	—			—		
1	Remote Control Rejection	ON	Rejection	OFF	Rejection	Forced OFF	Rejection
2	Central Priority	ON	Acceptable				
3	Remote controller Acceptable/ Rejection	ON	Only Stop acceptable				
4	Remote controller acceptance / rejection, OFF	Permit	Acceptable				

Position	Function	Input A close/open (pulse input)		Constant Input B close (Constant input) (Input A is ignored)	
		Operation or not of indoor unit	From Remote controller	Operation or not of indoor unit	From Remote controller
5	Remote Control Rejection	ON / OFF	Rejection	Forced OFF at close	Rejection
6	Last command Priority	ON / OFF	Acceptable		

Position	Function	Input A close/open (pulse input)		Input B close/open (pulse input)	
		Operation or not of indoor unit	From Remote controller	Operation or not of indoor unit	From Remote controller
7	Remote Control Rejection	ON	Rejection	OFF at close	Rejection
8	Last command Priority	ON	Acceptable		
9	Remote controller OFF Acceptable	ON	Only Stop acceptable		
A	Remote controller acceptance / rejection, OFF	permit	Acceptable		
B	Last command Priority	ON	Acceptable	OFF	Acceptable
C	Position 5 + Energy Saving Control	The same as position 5		Forced thermostat OFF at ON	
D	Position 5 + Temperature Set-Back			Setting temperature shift command at ON	
E	Position 6 + Energy Saving Control	The same as position 6		Forced thermostat OFF at ON	
F	Position 6 + Temperature Set-Back			Setting temperature shift command at ON	

Note:

1. When constant input is used for input B at position 7~A, the system is shut-down forcibly (Ignored input A). Constant input cannot be used for input B at position B.
2. Refer to the followings for the outline of above functions.

■ Description of Functions (Outline)

1. Remote Control Rejection..... For when you want to turn ON/OFF only by central remote controller. (ON/OFF cannot be controlled by remote controller for indoor unit.)
2. Remote controller OFF Only Accepted ..... For when you want to turn ON only by the central remote controller, and turn OFF only by remote controller for indoor unit.
3. Central Priority ..... For when you want to turn ON only by the central remote controller, and during the set time, turn ON/OFF freely by remote controller for indoor unit.
4. Individual Priority (Last command priority) ..... For when you want to turn ON/OFF by both central remote controller and remote controller for indoor unit.
5. Remote Controller Permission Timer ..... For when you want to turn ON/OFF by remote controller for indoor unit during set time, and you want to start the operation by remote controller for indoor unit at the programmed time of system start.

<Example when the control mode selector switch is set at position 6>

The following is the time chart for the command by remote controller and the indoor unit against input signal.

Timing Chart for Each Control Mode by momentary input

2. Central Priority

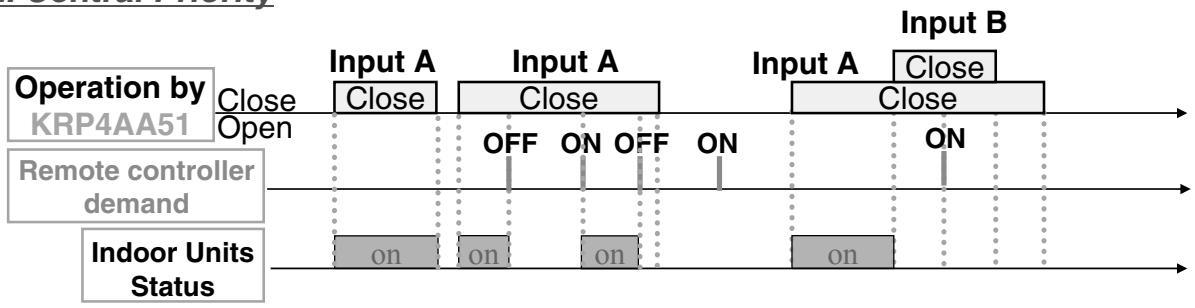

3. Remote controller acceptance / rejection

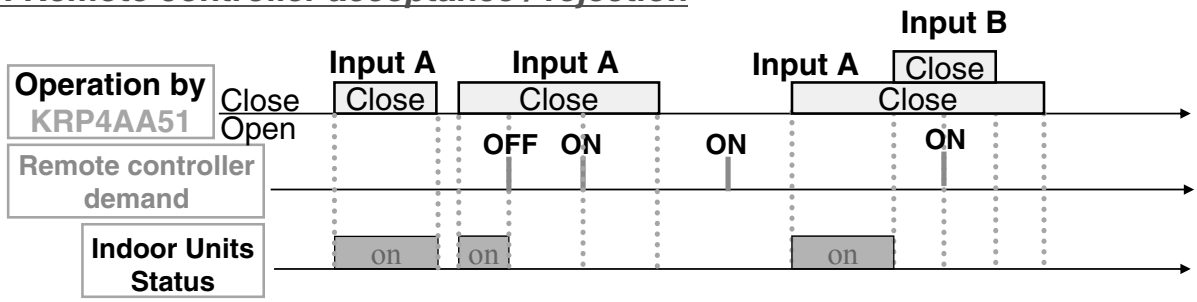

5. Remote controller rejection

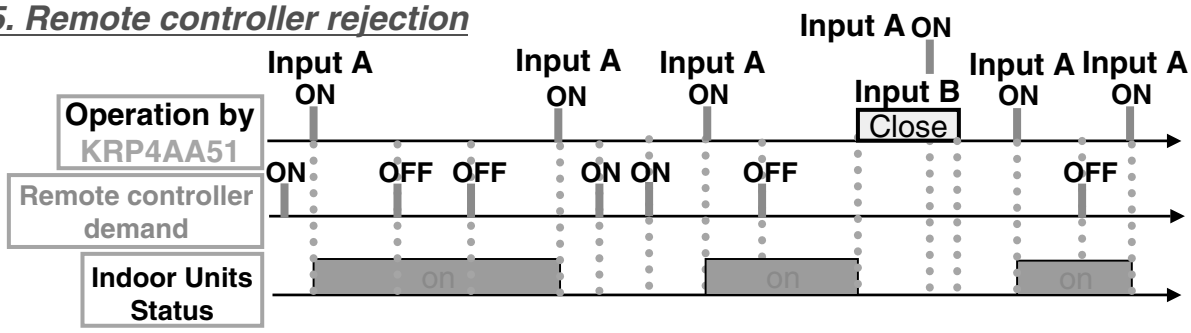

6. Last Command Priority

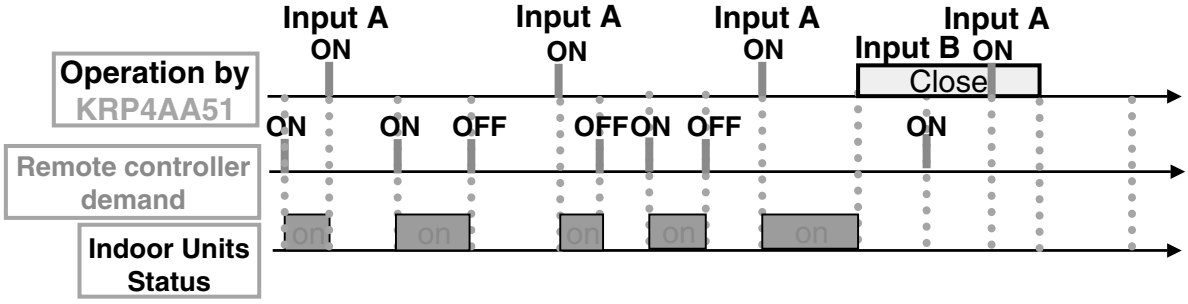

9. Remote controller OFF Acceptable

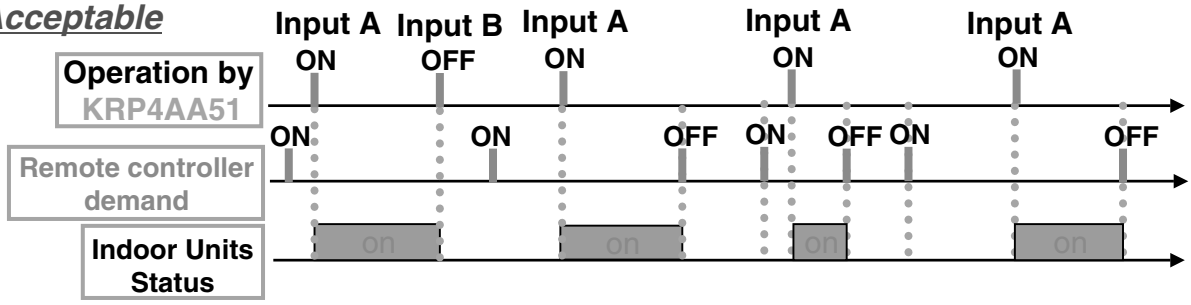

8.2.5 Precautions before Use for the Wiring Adaptor for Electrical Appendices (2)

Combined use of the wiring adaptor for electrical appendices (2) and the centralized control equipment is possible by the following setting method only under the limited use condition.

[Setting method]

Cut the jumper (J5) for the wiring adaptor for electrical appendices (2).
(Note, however, that the adaptor may not operate normally unless the following use condition is met.

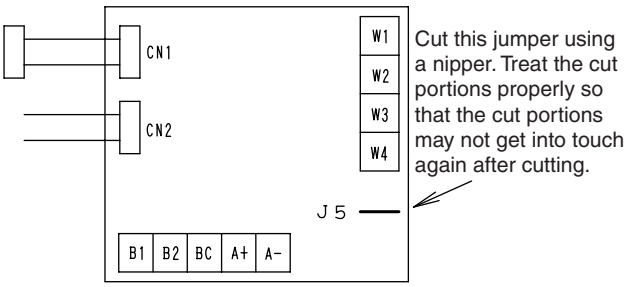

[Use condition]

(1) When the wiring adaptor for electrical appendices (2) is used in the following ways, combined use of the wiring adopter and the centralized control equipment is possible.
① As for the monitor, operation using the wiring adaptor for electrical appendices (2)
② Forced thermo. off control using the wiring adaptor for electrical appendices (2)
(Mode setting: Only input B is used at the positions C and E)
③ Room temperature set shift control using the wiring adaptor for electrical appendices (2)
(Mode setting: Only input B is used at the positions D and F)

(2) In the case of teleconference using the wiring adaptor for electrical appendices (2), combined use is possible if the centralized control equipment is used as given in the following table.

Models	Conditions
Central remote controller (DCS302CA61)	Possible if forced outage input is not used and the adaptor is used using any of the operation codes 6, 7, 16, and 17.
Unified ON/OFF controller (DCS301BA61)	Possible if forced outage input is not used, and the adaptor is used using the operation code of priority to the last press
Schedule timer (DST301BA61)	Possible if the operation code is set to priority to the last press
Unification adaptor for computerized control (DCS302A52)	Possible if the input mode is set to the position 3

9. Remote Sensor (For Indoor Temperature)

9.1 KRCS01-1B / KRCS01-4B

Item \ Model		KRCS01-1B	KRCS01-4B
Length of branch wiring	m	12	
Appearance		Light ivory (with the Daikin logo)	
Box material		ABS resin	
Mass	kg	0.3	
Dimensions (W × H × D)	mm	50 × 60 × 15	
Component parts		Remote sensor. Extension cord (12m). Screws. Clamps. Installation manual.	

- Recommended for ceiling suspension and ceiling-embedded types which often result in a difference between set temperature and actual temperature.
- The sensor for detecting the temperature can be placed away from the indoor air conditioner. (Branch wiring is included in the kit.)

Caution

- Select a location for the sensor where it can detect the average temperature. Avoid the following locations.

1. Locations in direct sunlight.
2. Locations where the outlet air from the air conditioner is directed.
3. Locations close to other heat sources.
4. Locations near doors which might be affected by air coming in.

Installation Manual

Remote Sensor Installation Manual

KRCS01-1B
KRCS01-4B

Be sure to read this manual before installation and follow the instruction.

3K019189-1D

Notes

- Please check applicable kit model name by catalog etc..
- When installed on Skyair Round-flow type models, the dehumidification by detection of humidity does not operate.

Accessories

Check the following accessories.

Name	Remote sensor (sensor box)	Extension cable (2-core, 12m)	Clamp	Installation manual (this drawing)	Mounting screw (M4X16)
Shape	①	②	③	④	⑤
Quantity	X 1	X 1	X 2	X 1	X 2

1 Mounting

1)Selection of mounting location.

The thermistor for temperature detection is incorporated into the remote sensor. Select the mounting location taking the following cautions into account.

①Where the average temperature of an air conditioned room can be detected.
②Where it is not exposed to the direct sunlight.
③Where it is not influenced by other heat sources.
④Where it is not exposed to the direct discharge air from the air conditioner.
⑤Where it is not exposed to the outdoor air infiltrated into the room by opening the door.

2)Mounting

●Remove the cover of the sensor box.

①Insert a flat blade screw driver into the sensor box concave part (2 locations).
②Remove the cover pushig up the nail to the cover of the sensor box.

about 6mm width flat blade screw driver

<Cautions>

Do not push the nail powerfully with a narrow flat blade screw driver, because you may break off the nail.

3K019189D

(a)When mounting on the wall

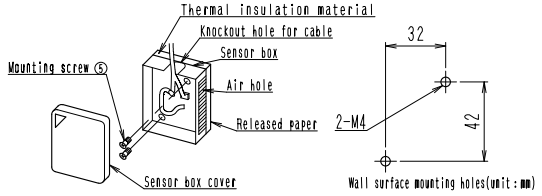

- Break open the knockout hole in the sensor box with a nipper or a similar tool. Pass the extension wires through the hole and fasten the wires to the terminals with screws.
- To avoid tensile force on the terminals, pass the attached clamp through the holes shown in the below right figure and tighten the extension cable with the attached clamp at the sheathed part. (The knot must come to the box inside.)

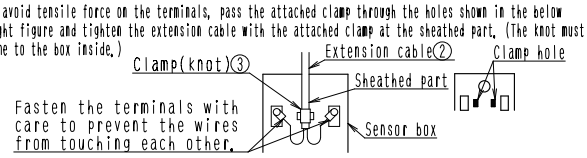

- Screw the sensor box securely to the wall surface with screws M4X16(2 places). If the sensor box cannot be screwed to wall surface, tear off the released paper and mount it on the wall surface.

(b)For embedded wiring

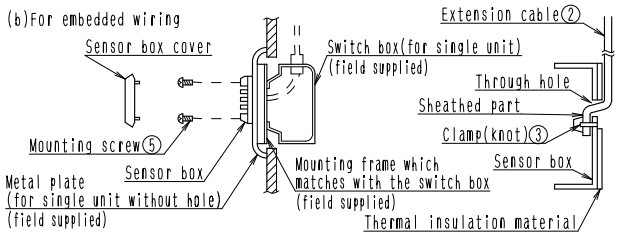

- Pass the extension cable through the switch box cable hole and carry out the wiring.
- Pass the attached clamp though the clamp holes and tighten the extension cable at the sheathed part as shown in the upper right figure.
- Tap M4 screw holes in the metal plate (field supplied) as shown in the right drawing and mount the switch box on the metal plate.

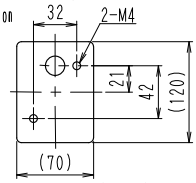

Holes to be tapped in the metal plate on site (unit: mm)

<Cautions>

- When wiring the extension cable, the air holes will not be blocked.
- When the extension cable is longer than necessary, cut it to the appropriate length, peel the insulation, attach the round crimp terminal for M3 (field supplied) and carry out the wiring. The length of insulation to be peeled off is as shown.
(Work carefully so that the connector side may not be cut.)

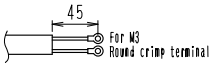

❷ Wiring method

Connect the extension cable connector side to the indoor unit PCB (printed circuit board) For connection to the indoor unit, follow the procedure shown below.

⚠ Caution

1) Make sure to turn off the power supply before starting the wiring work and do not turn on until all the work is completed.
Read also the installation manual and the wiring diagram of the indoor unit when carrying out the work.
2) When wiring the extension cable, do not pass where the extension cable may be affected by the power line or noise.
3) Make sure to securely connect the connectors.
Defective connection may result in incorrect detection of room temperature or malfunction.
4) Do not splice wires.
5) Since the connector marking of the thermistor for detection of inlet air temperature differ depending on the indoor unit type, make sure to check the indoor unit wiring diagram and follow it correctly.
6) Lay and clamp the extension cable inside the indoor unit switch box just like the low voltage line(cord for remote controller).
And do not pass where the extension cable inside the indoor unit switch box may be affected by the power line(cord for the indoor unit and the other electric line).

<Procedure>

1) When wiring to the indoor unit PCB, remove the existing thermistor (for detection of inlet air temperature) and then connect the extension cable.
When doing this work, make sure to check the symbol of connecting address on the PCB whether it is correct or not referring to the wiring diagram.

<For Skyair and VRV>

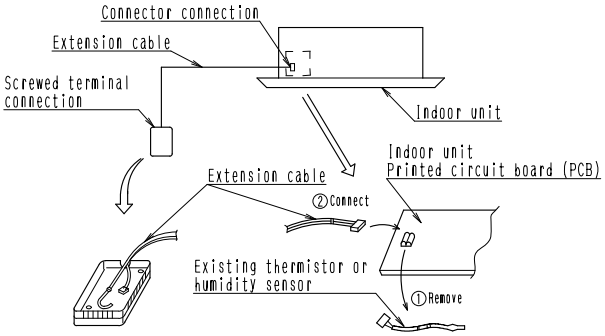

2) Lay and clamp the extension cable inside the indoor unit switch box just like the existing thermistor.
When doing this work, keep a certain distance between the high voltage wiring and the low voltage wiring to avoid error of sensor.
Provide protection of the existing cable for thermistor without affecting other components.
3) Fit the sensor box cover into the sensor box.

❸ Operation test after mounting the sensor

Conduct cooling and heating operation test after the sensor is mounted and the wiring is completed.

3K019189D

10. Installation Box for Adaptor PCB

10.1 KRP1H98

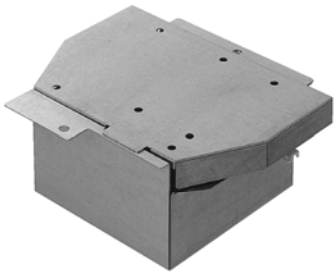

Item \ Model	KRP1H98
Material	Hot-dip zinc-coated carbon steel sheet
Applicable adaptor	KRP1C63 / KRP2A62 / KRP4AA53
Accessories	Clamps. Mounting screws. Earth wire (length: 1060m). Screw for earth wire. Installation manual.

DAIKIN AIR CONDITIONER
KRP1H98

Installation box for adapter PCB.
Installation manual

READ THESE INSTRUCTIONS CAREFULLY BEFORE INSTALLATION.
KEEP THIS MANUAL IN A HANDY PLACE FOR FUTURE REFERENCE.

2P196605-1B

Caution

- This box is mountable on the ceiling mounted cassette type (round-flow type) unit. After confirming the indoor unit model name, mount this box on the unit listed in the table shown bottom.
- When mounting the box, see also the indoor unit installation manual and the adapter PCB (Printed Circuit Board) mounting instruction.

Kit name		Indoor unit model that party crowded is possible
KRP1H98	SkyAir	FCQ-K(A), FCQ-LU, FCQN-K
	VRV	FXFQ-S, FXFQ-P, FXFQ-LU

Accessories Check if the following accessories are included with your kit.

Name	Adapter box	Adapter box cover	Screw(1)	Screw(2)
Quantity	1PC.	1PC.	2PCS.	1PC.
Shape			M4×12	M4×8

Name	Clamp	Earth wire	Screw for earth wire	Installation manual
Quantity	8PCS.	1PC.	1PC.	1PC.
Shape				

1 Mounting the adapter box

《Preparation before wiring》
Remove the switch box cover. (Fig.1)

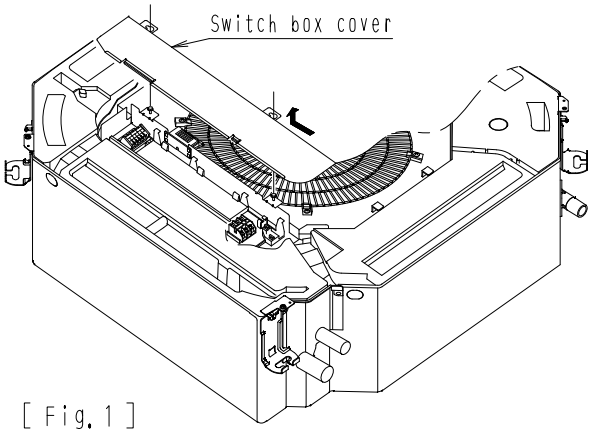

[Fig.1]
※ The figure mentions FCQ~C7VEB as a representative.

C: 2P196605B

《Mounting the adapter box》

①Remove the cover, when the cover is attached. (Fig. 2)

②Fix the box with the attached fixing screws (1) at two places. (Fig. 3)

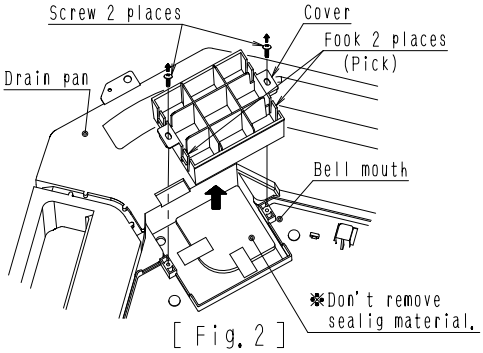

[Fig. 2]

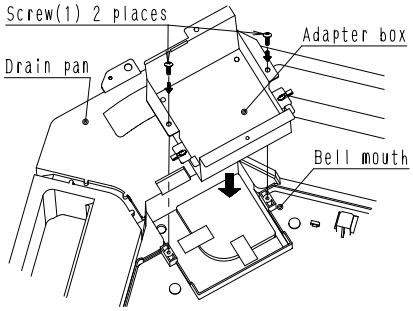

[Fig. 3]

※ The figure mentions FCQ~C7VEB as a representative.

❷ Mounting the adapter PCB

《How to mount the adapter printed circuit board》

①Connect the wiring to the adapter printed circuit board.
(The work is easier if the wiring is connected to the printed circuit board first.)

- See the instruction attached to the adapter printed circuit board for where to connect the wiring.

②Mount the adapter printed circuit board on the adapter box and the adapter box cover.

Adapter printed circuit board	Place where to mount
KRP4AA53 KRP2A62	The printed circuit board to be mounted on the adapter box. (Fig. 4)
KRP1C63	The printed circuit board to be mounted on the adapter box cover. (Fig. 5)
KRP1BA57	The printed circuit board to be mounted on the adapter box cover. (Fig. 6)

- For the mounting position of the adapter printed circuit board, see the instruction attached to the adapter printed circuit board.

③Fix the earth wire with the attached fixing screw for earth wire. (Fig. 4)

④Bind the wiring from the adapter printed circuit board with the attached clamp. (Fig. 4~6)

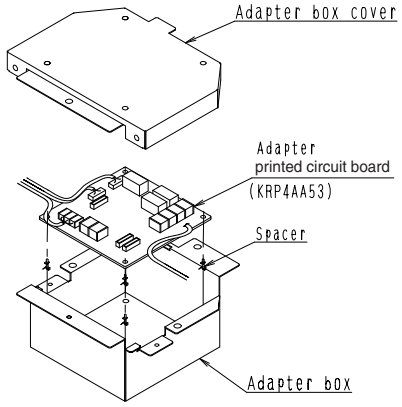

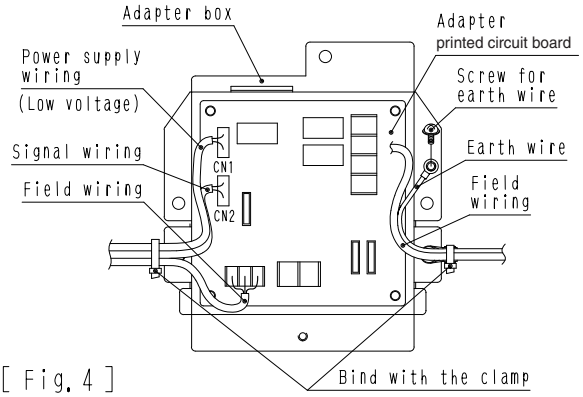

[Fig. 4]

Continues on back side

C: 2P196605B

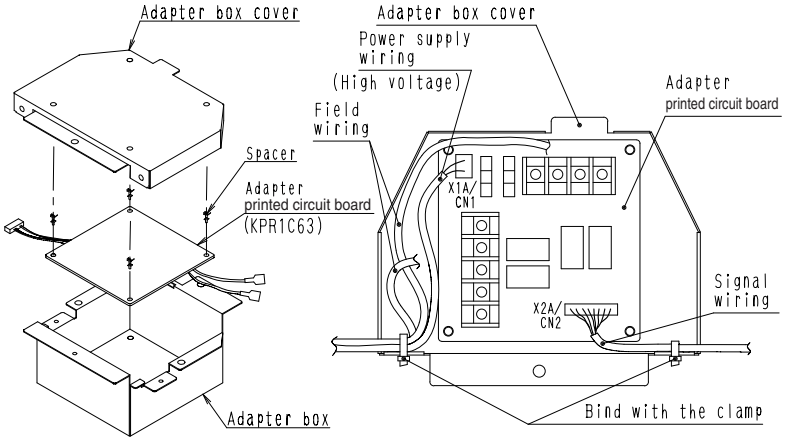

[Fig. 5]

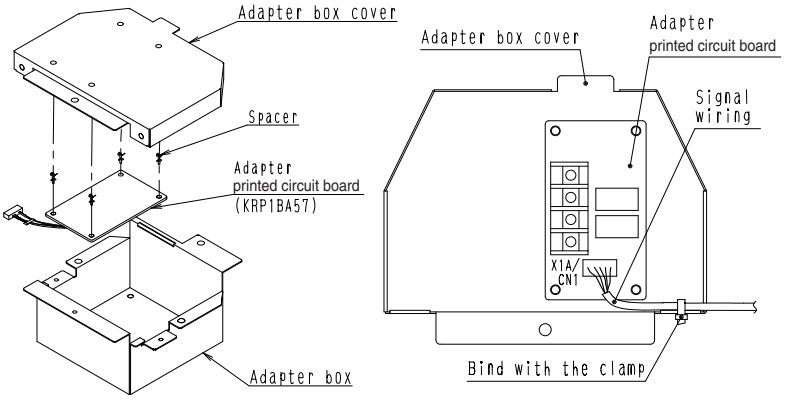

[Fig. 6]

⑤After putting the claw of the cover into the hole of the box, fix them with the attached screw (2). (Fig. 7)

- Take precautions to prevent the wires from getting caught.

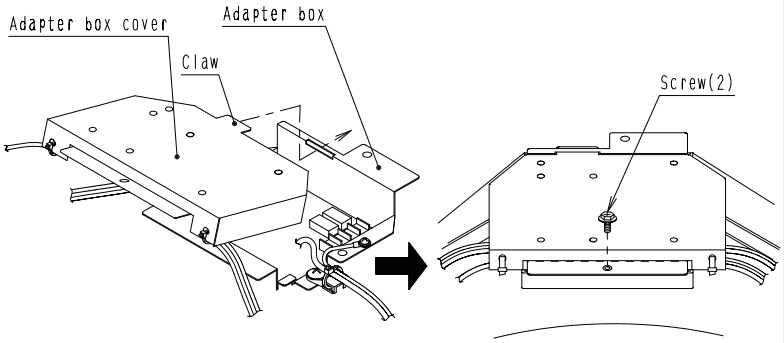

[Fig. 7]

C: 2P196606B

❸ How to handle the wiring

《Wiring to the indoor unit》

- Connect the wiring from the adapter printed circuit board to the indoor unit. (signal wires, power supply wires, earth wires) (See the installation manual of indoor unit and wiring diagram lavel for where to connect the wiring.)
- See the instruction attached to the adapter printed circuit board for the place where to connect the wires on the indoor unit.

① Fix the internal wirings.

- Bind the wiring from the adapter box to the indoor unit switch box according to the drawing shown on the right with the attached clamp.
- Bind the the surplus wires and the other wiring together with the clamp.

② Secure firmly the switch box cover in place in opposite order of removing.

- Take precautions to prevent the wires from getting caught.

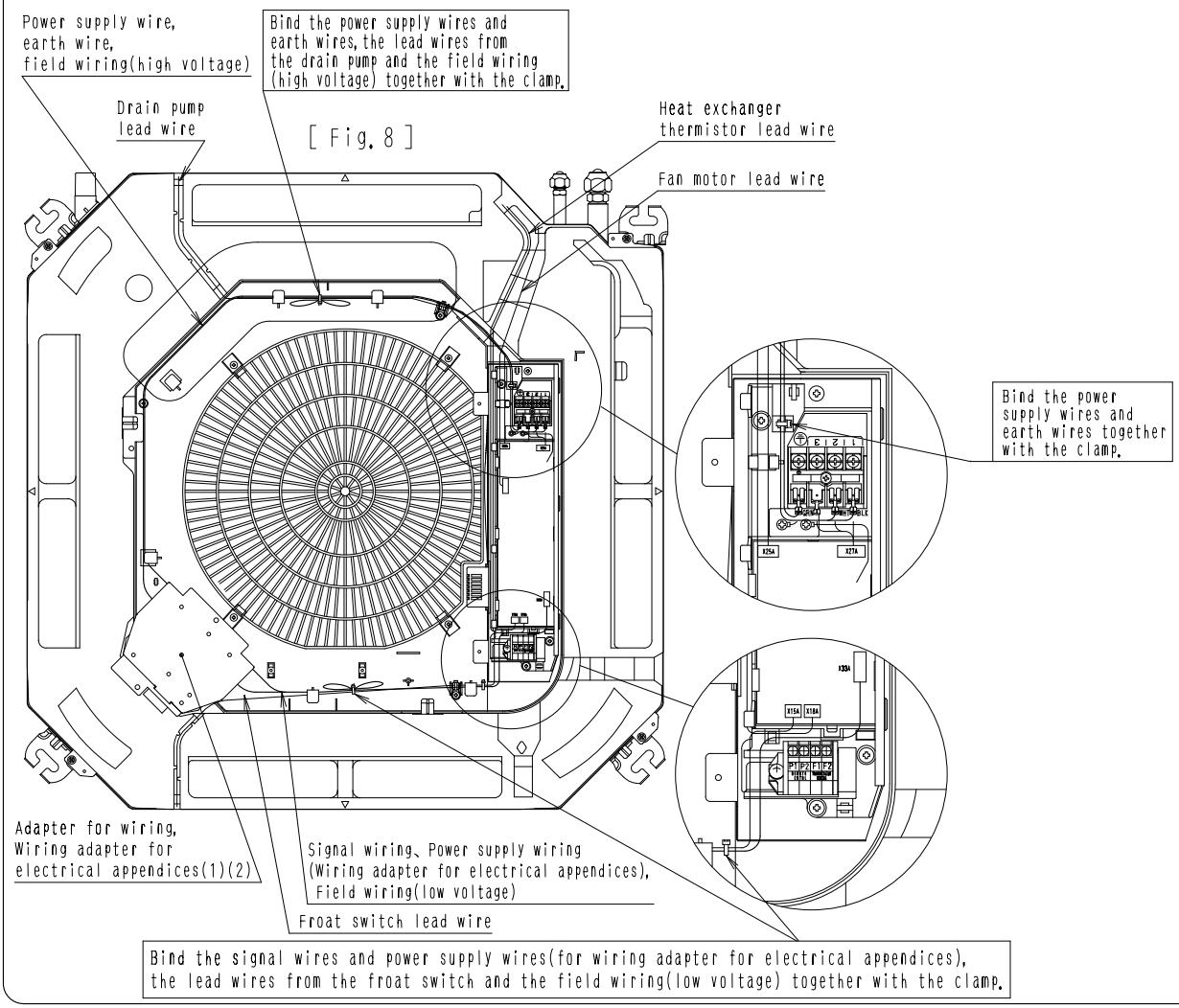

C: 2P196606B

10.2 KRP1BA101

Item \ Model	KRP1BA101
Installation	Internal
Material	Hot-dip zinc-coated carbon steel sheet
Accessories	Clamp. Mounting screws. Code sticker. Installation manual.

2

Notes

- One kit is required for each adaptor.
- Refer to the installation manuals attached to the indoor unit and adaptor.

Kit name	Indoor unit
KRP1B101 KRP1BA101	FFQ type FXZQ type FXD type FXDQ type FTQ type FXTQ type

Accessories

Check the following accessories are included in this kit.

Name	Installation box	Lid of installation box	Clamp	Screw	Cord sticker	Installation manual	Screw
Quantity	x 1	x 1	x 3	x 3	x 3	KRP1B101: English x 1 KRP1BA101: English x 1 , Japanese x 1	x 2
Shape	① 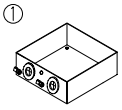	② 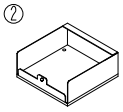	③	④	⑤	⑥ (This manual)	⑦

Applicable adaptor

Adaptor	Kit name		
	In case of FFQ, FXZQ type	In case of FXD, FXDQ type	In case of FXTQ, FTQ type
Adaptor for wiring	KRP1B(A)57	KRP1B56	KRP1C75
Wiring adaptor for electrical appendices(1)	KRP2A52, KRP2A62	KRP2A53	————
Wiring adaptor for electrical appendices(2)	KRP4A(A)53	KRP4A54, KRP4A74	KRP4A74
External control adaptor for outdoor units	DTA104A52, DTA104A62	DTA104A53	DTA104A53

<In case of FFQ, FXZQ type>

❶ Method of attaching the adaptor

Attach the adaptor

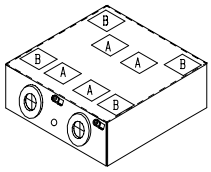

Attach the adaptor in the installation box① by the PCB supports.
(PCB supports are accessories of adaptor.)

- Detach the aluminum tape of the installation box① to insert the PCB support.

  Adaptor : KRP1B(A)57 --- Detach the aluminum tapes A.
  KRP2A52, KRP2A62, KRP4A(A)53, DTA104A52, DTA104A62 --- Detach the aluminum tapes B.
- Connect wires with the adaptor before attaching to the installation box①.
- Low voltage wires and high voltage wires should be kept space at least 50mm from each other.

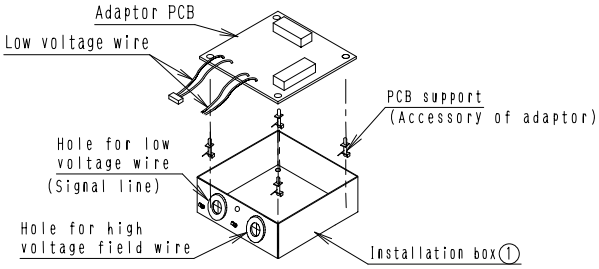

1P107687D

Attach the lid of installation box

Attach the lid of installation box② to indoor unit with two screws.
If two adaptors are installed, the second adaptor is attached to side of first one.

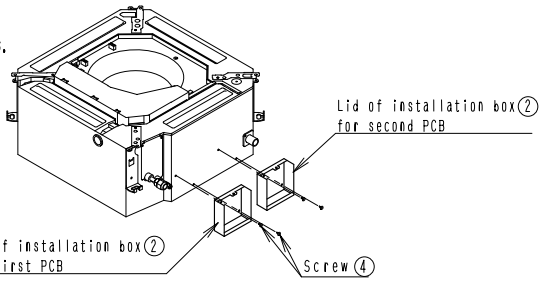

Attach the installation box

Attach the installation box① into the lid of installation box② with the screw.

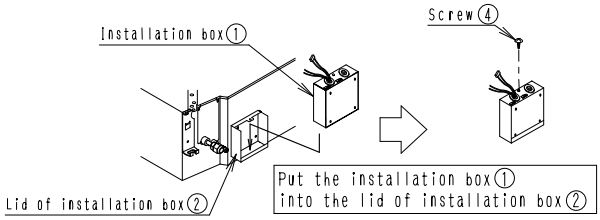

❷ Method of wiring processing

- Connect wires with the control box. (Refer to the installation manual attached to the adaptor.)
- After connecting wires with the control box, clamp wires by using the cord stickers⑤ and the clamp③ as shown in the below drawing.

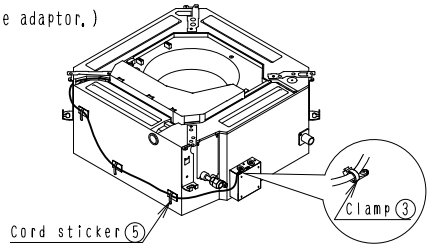

1P107687D

<In case of FXD, FXDQ type>

❶ Method of attaching the adaptor

Attach the adaptor

- Detach the aluminum tape of the installation box① to insert the PCB supports.
  - Adaptor : KRP1B56 --- Detach the aluminum tapes A.
  - Adaptor : KRP2A53, KRP4A54, KRP4A74, DTA104A53 --- Detach the aluminum tapes B.

  Attach the adaptor in the installation box① by the PCB supports.
  (PCB supports are accessories of adaptor.)
- Connect wires with the adaptor before attaching to the installation box①.
- Low voltage wires and high voltage wires should be kept space at least 50mm from each other.

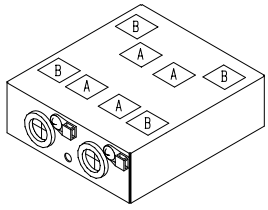

In case of KRP1B56 type

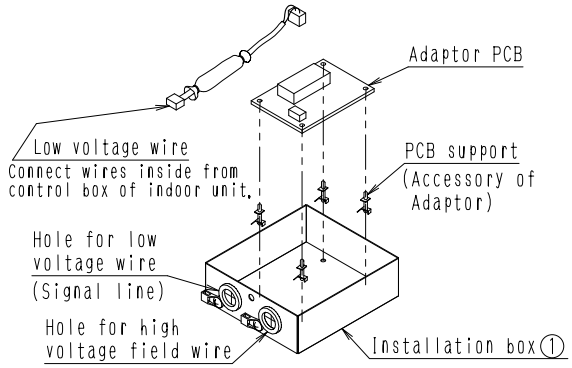

In case of KRP2A53, KRP4A54, KRP4A74, DTA104A53 type

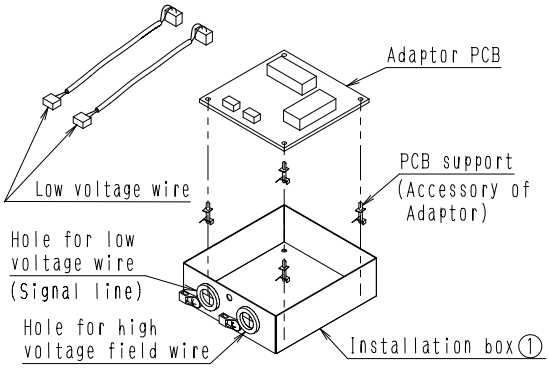

Attach the lid of installation box

- Attach the lid of installation box② to indoor unit with two screws④.
- If two adaptors are installed, the second adaptor is attached to side of first one.
- When the insulation kit is used together, attach the lid of installation box② to indoor unit with two screws⑦.

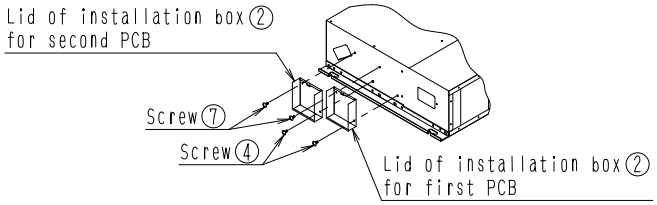

Attach the installation box

Attach the installation box① into the lid of installation box② with the screw④.

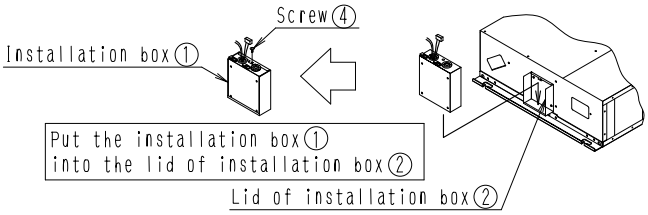

1P107687D

❷ Method of wiring processing

- Connect wires with control box. (Refer to the installation manual attached to the adaptor.)
- After connecting wires with the control box, clamp wires by using the cord stickers⑤ and the clamps③ as shown in the below drawing.

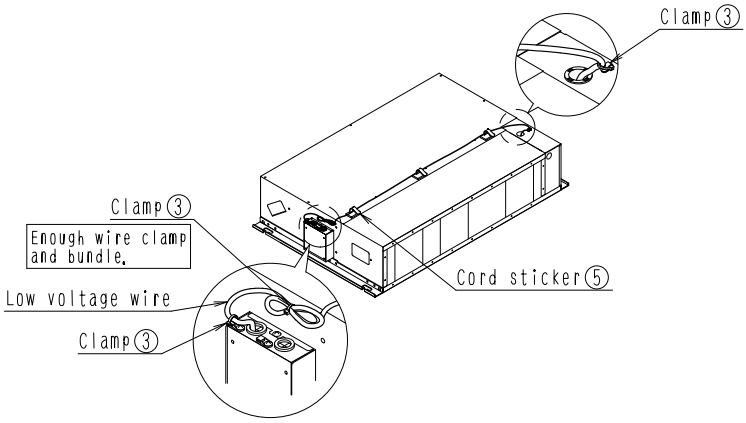

<In case of FXTQ, FTQ type>

❶ Method of attaching the adaptor

Attach the adaptor

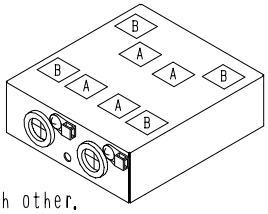

- Detach the aluminum tape of the installation box① to insert the PCB supports.
  Adaptor : KRP1C75, KRP4A74, DTA104A53 --- Detach the aluminum tapes B.
  Attach the adaptor in the installation box① by the PCB supports.
  (PCB supports are accessories of adaptor.)
- Connect wires with the adaptor before attaching to the installation box①.
- Low voltage wires and high voltage wires should be kept space at least 50mm from each other.

In case of KRP1C75, KRP4A74, DTA104A53 type

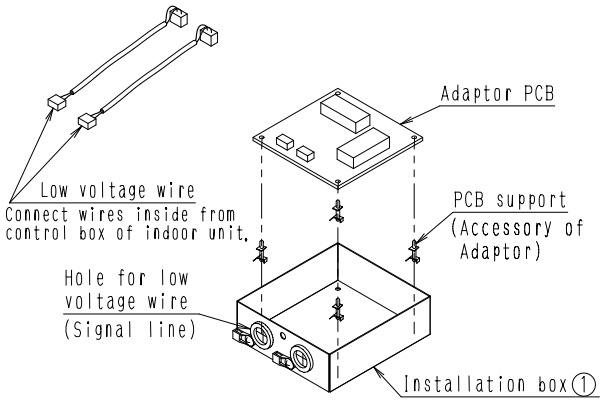

Attach the lid of installation box

- Do not mount the installation box directly on the unit.
  Mount the box near the local wiring outlet.
- Attach the lid of installation box② on the vertical rigid surface near the unit with two screws④.
- If two adaptors are installed, the second adaptor is attached to side of first one.

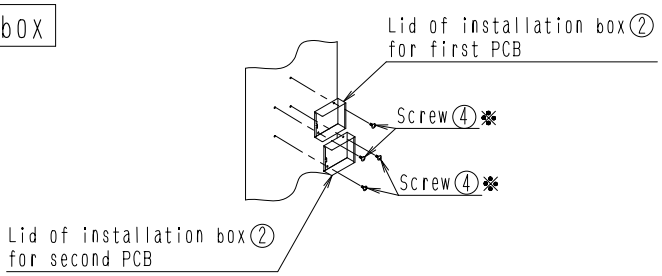

※If the attached screws④ cannot be used due to the local conditions, procure the screws locally.

1P133507A

Attach the installation box

Attach the installation box① into the lid of installation box② with the screw④.

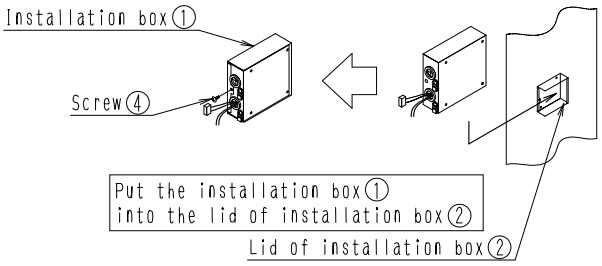

❷ Method of wiring processing

- Connect wires with control box. (Refer to the installation manual attached to the adaptor.)
- After connecting wires with the control box, clamp wires by using the clamps③ as shown in the below drawing.

Detail view of control box

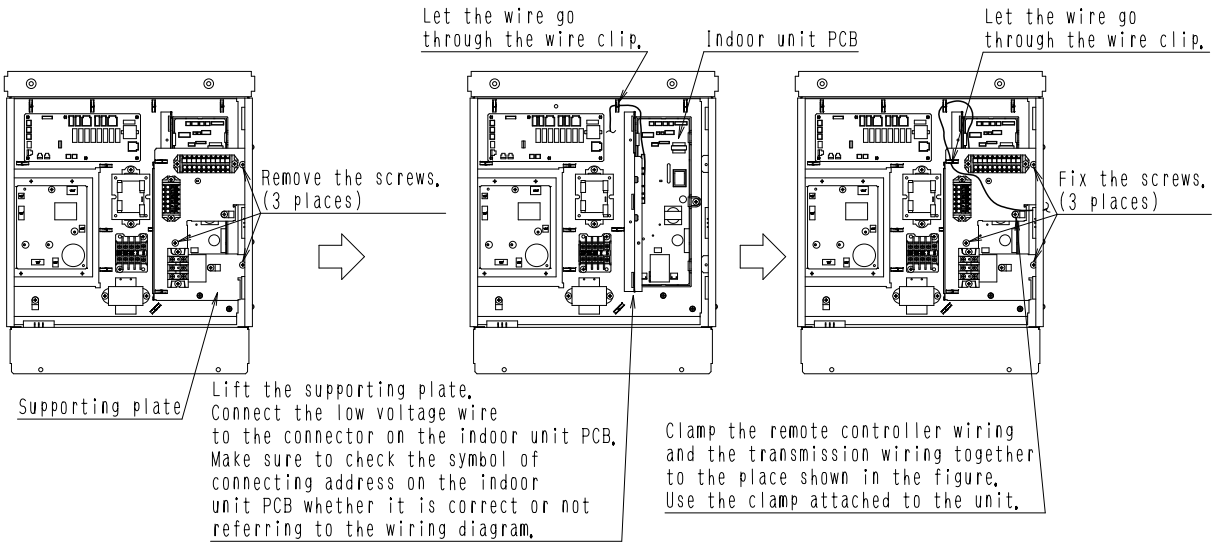

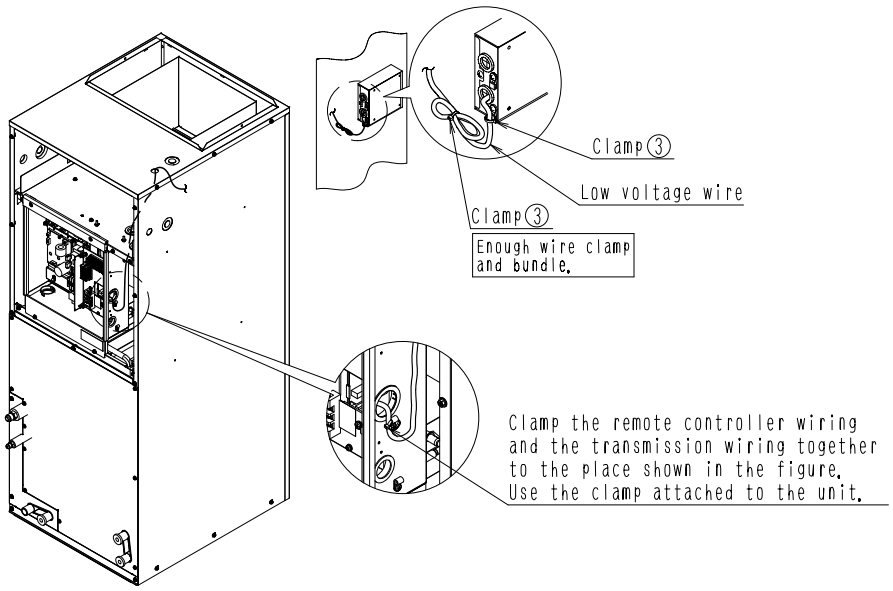

1P133507A

10.3 KRP1DA98

Installation Manual

Kit name	Indoor unit model that party crowded is possible	
KRP1DA98	VRV	FXF−LVE

Caution

- This box is mountable on the ceiling mounted cassette type (multi-flow type) unit. After confirming the indoor unit model name, mount this box on the unit listed in the table shown right.
- When mounting the box, see also the indoor unit installation manual and the adapter PCB (Printed Circuit Board) mounting instruction.

Accessories

Check if the following accessories are included with your kit.

Name	Adapter box	Adapter box cover	Clamp	Screw(1)	Screw(2)	Installation manual
Quantity	1PC.	1PC.	8PCS.	2PCS.	2PCS.	1PC.
Shape				M4×12	M4×8	

1 Mounting the adapter box

《Preparation before wiring》

①Remove the switch box cover and the terminal cover. (Fig.1)
②Open the switch box until it almost touches the bell mouth. (Fig.2)

《Mounting the adapter box》

①Fix the box with the attached fixing screws (1) at two places and the fixing screw (2) at one place. (Fig.3)

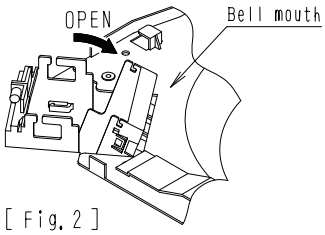

[Fig.2]

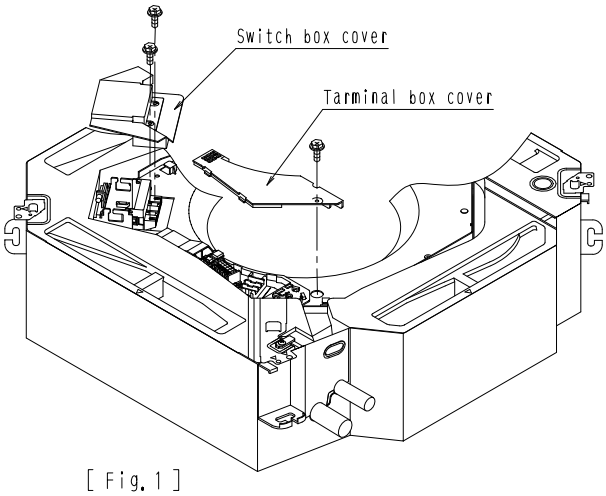

[Fig.1]

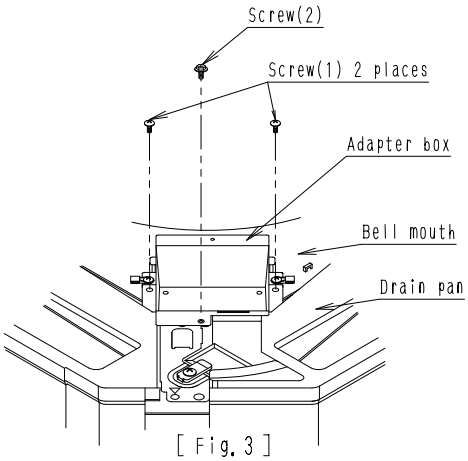

[Fig.3]

C: 1P086302B

❷ Mounting the adapter printed circuit board

《How to mount the adapter printed circuit board》

① Connect the wiring to the adapter printed circuit board.
(The work is easier if the wiring is connected to the PCB first.)

- See the instruction attached to the adapter PCB for where to connect the wiring.

② Mount the adapter printed circuit board on the adapter box and the adapter box cover.

Adapter PCB	Place where to mount
Adapter for wiring	The printed circuit board to be mounted on the adapter box cover. (Fig. 1)
Wiring adapter for electrical appendices(1)(2)	The printed circuit board to be mounted on the adapter box. (Fig. 2)

- For the mounting position of the adapter printed circuit board, see the instruction attached to the adapter printed circuit board.

③ Bind the wiring from the adapter printed circuit board (signal wires, power supply wires) with the attached clamp. (Fig. 1) (Fig. 2)

④ After putting the claw of the cover into the hole of the box, fix them with the attached screw (2). (Fig. 3)

- Take precautions to prevent the wires from getting caught.

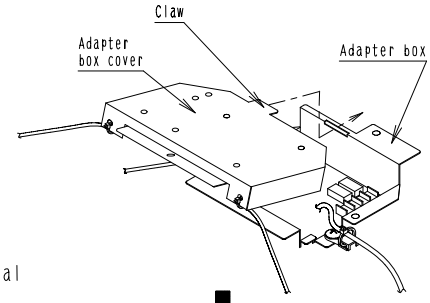

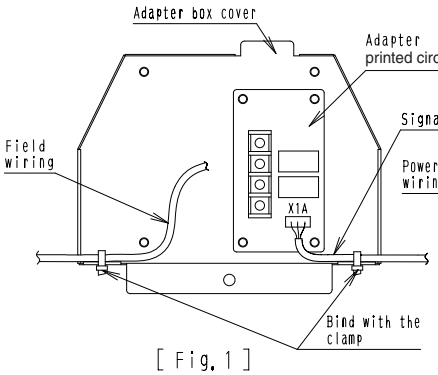

[Fig. 1]

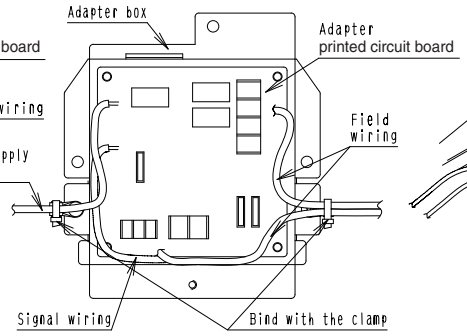

[Fig. 2]

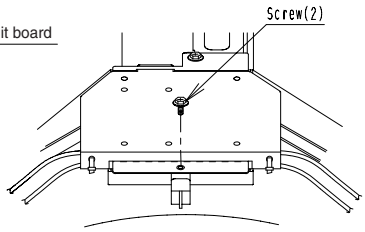

[Fig. 3]

❸ How to handle the wiring

《Wiring to the indoor unit》

Connect the wiring from the adapter PCB to the indoor unit. (signal wires, power supply wires)

- See the instruction attached to the adapter printed circuit board for the place where to connect the wires on the indoor unit.

① Fix the internal wirings.

- Bind the wiring from the adapter box to the indoor unit switch box and to the terminal box according to the drawing shown on the right with the attached clamp.
- Bind the the surplus wires and the other wiring together with the clamp.

② Shut the switch box and secure firmly the switch box cover and the terminal box cover in place in opposite order of removing.

- Take precautions to prevent the wires from getting caught.

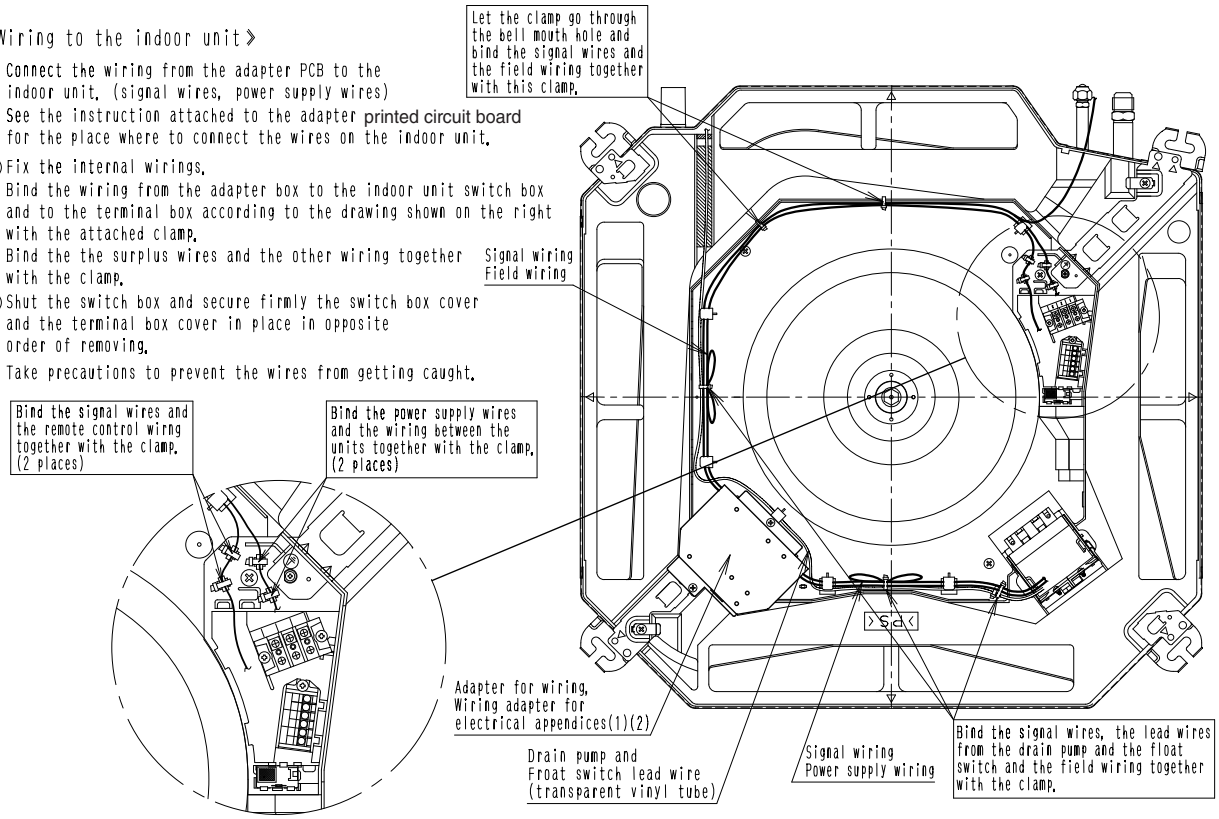

C: 1P086302B

10.4 KRP1B96 / KRP4A91

Dimensions

KRP1B96 Unit (mm)

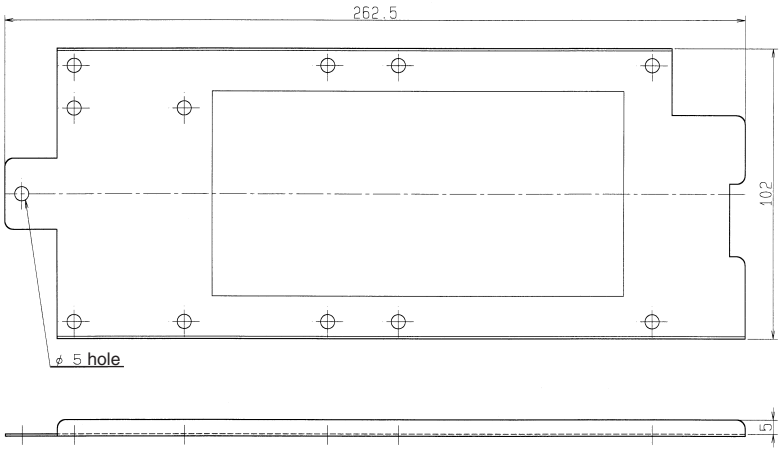

Material: Hot-dip zinc-coated carbon steel sheet

D3K1581

KRP4A91 Unit (mm)

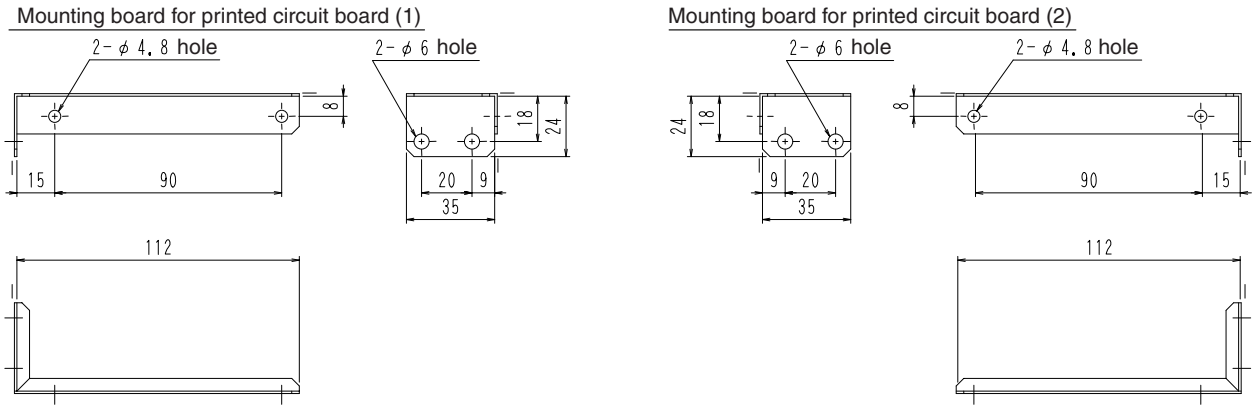

Material: Hot-dip zinc-coated carbon steel sheet

C: D3K2797

10.5 KRP1B100

Installation Manual

Notes

- This kit can be used with the indoor air conditioners (duct type).
- One kit is required for each adaptor PC board.
- Refer to the installation manual of the indoor air conditioners and adaptor PCB additionally when this kit is installed.

Kit name	Indoor air conditioner in which this kit is installed.
KRP1B100	FDY06・08・10・15・20K FXYD-KAVE

Accessories Check whether the following accessories are included in this kit.

Name	Installation box	Cover for installation box	Support plate for installation box	Clamp material	Screws	Cord sticker	Installation manual
Quantity	x 1	x 1	x 1	x 2	x 5	x 3	x 1
Shape	① 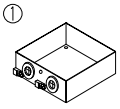	② 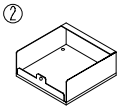	③ 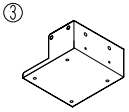	④	⑤	⑥	⑦ (This manual)

Applicable adaptor PCB

Adaptor PCB	Kit name
Wiring adaptor for electrical appendices	KRP4A53

Adaptor PCB	Kit name
Adaptor for wiring	KRP1B57

NOTE ❋)
In case of only FDY_K Series,
The adaptor for wiring
and the interface adaptor for Skyair series
can be not installed together.

1 Method of installing the adaptor PCB

Installation of adaptor PCB

The adaptor PCB is installed in the installation box ①by the PC board supports .

- Detach the aluminum tape of the hole of the installation box ① which inserts the PC board supports .
- Connect wires with the adaptor PCB before attaching to the installation box①.
- Be sure to pass the hole with the space of high and low voltage wires kept.

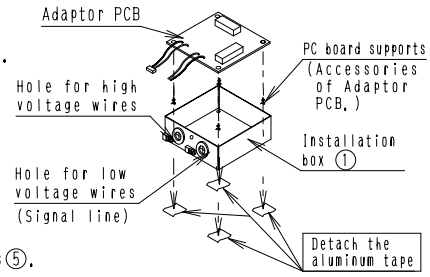

Attaching the support plate for installation box

Attach the support plate③to the indoor unit (EL.compo.assy) with the two screws⑤.

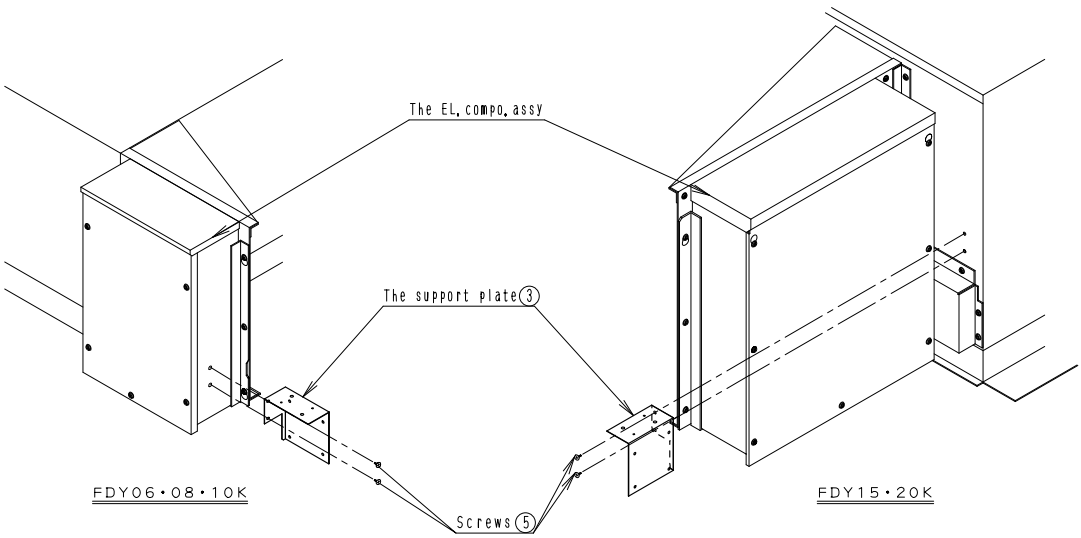

C: 1P078423

Attaching the cover for installation box

Attach the cover② in the support plate③with two screws.

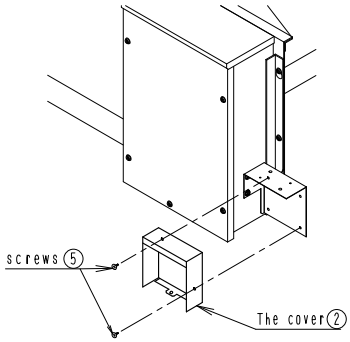

FDY06・08・10K

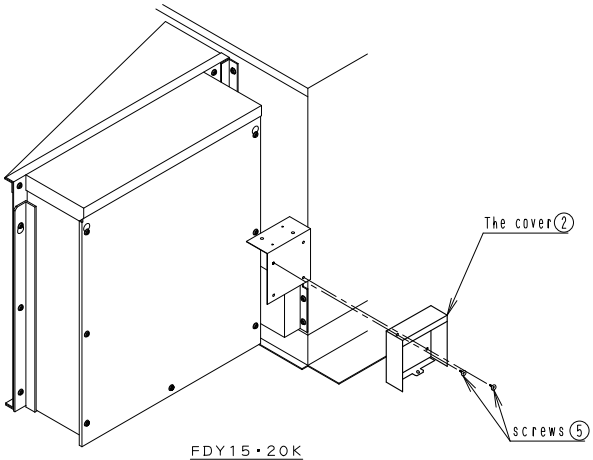

FDY15・20K

Attaching the adaptor PCB assy.

Attach the adaptor PCB assy to the cover②with the screw.

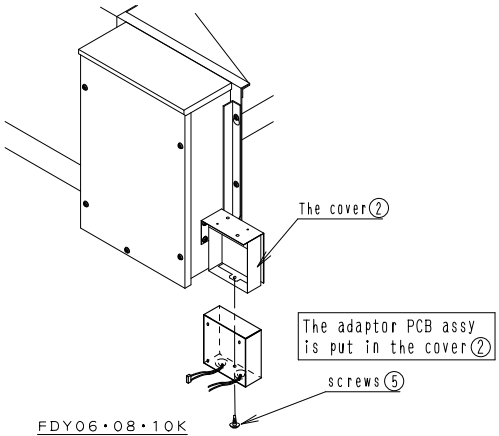

FDY06・08・10K

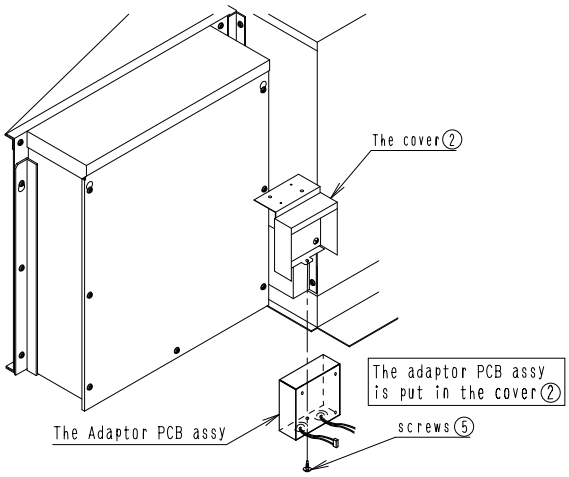

FDY15・20K

❷ Method of wiring processing

- Wire the adaptor PCB as explained in the installation manual provided with the adaptor PCB.
- After connecting wiring with the EL, compo, assy, clamp wires by using the cord sticker⑥and teh clamp material④ as shown in the below drawing.
  Be careful that neither wires are twisted or bent.
- Check after wiring and attaching the adaptor PCB assy to indoor unit.

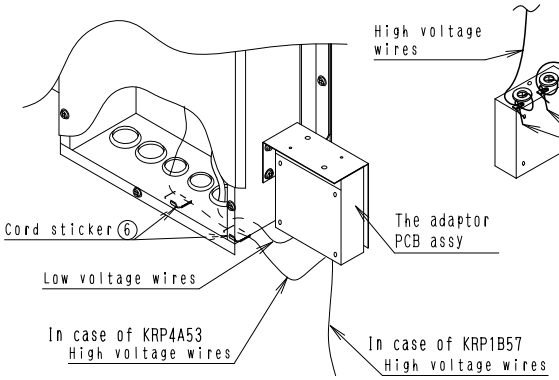

FDY06・08・10K

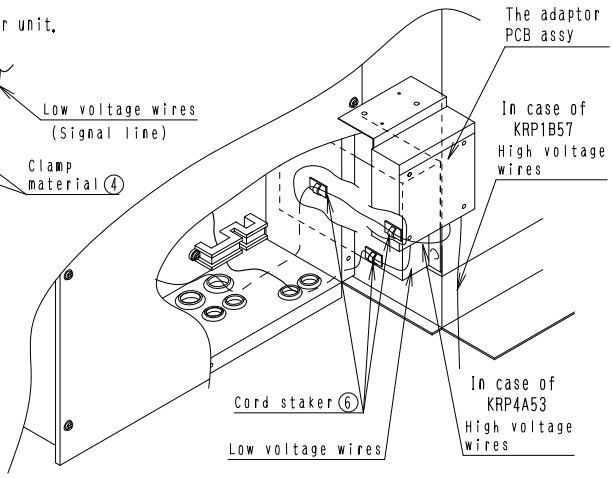

FDY15・20K

C: 1P078423

10.6 KRP4A96

Item / Model	KRP4A96
Installation	Internal
Material	Steel sheet (t=0.8 painting)
Accessories	Mounting screw (M4×8). Sealing material. Clamp. Installation manual.

Installation Manual

Caution

- This plate is mountable on the ceiling mounted duct type unit. After confirming the indoor unit model name, mount this plate on the unit listed in the table shown bottom.
- When mounting the plate, see also the indoor unit installation manual and the adaptor printed circuit board (Printed Circuit Board) mounting instruction.
- Fixing method is not on the installation manual attached to the adapter printed circuit board . Please follow directions on this sheet.

Kit name	Indoor unit model that party crowded is possible		
KRP4A96	Ceiling mounted duct type unit	SkyAir	FBQ-D(A)
		VRV	FXMQ-P

*See the DAIKIN catalog for the details

Accessories

- Check if the following accessories are included with your kit.

<Precaution>

The accessories are required for the installation of the air conditioner. Be sure to keep them until the installation work is completed.

Name	Adaptor plate	Screw	Sealing material	Clamp	Installation manual
Quantity	1PC.	2PCS.	2PC.	8PCS.	1PC.
Shape		M4×8			

<Caution>

- All field supplied parts and materials and electric works must conform to local codes.
- Use copper wire only.
- For electric wiring work, refer to also "Wiring diagram" attached to the control box lid.
- All wiring must be performed by an authorized electrician.
- A circuit breaker capable of shutting down power supply to the entire system must be installed.

❶ Mounting the adaptor plate

《Wiring to the indoor unit》

① Remove the control box lid. [Fig.1]

② Connect the wiring to the indoor unit. (The work is easier if the wiring is connected first.)

- See the instruction attached to the adaptor PCB for the place where to connect the wires on the indoor unit.
- Please see the connector location on (figure 1) on the ❷ How to mount the adaptor printed circuit board and handle the wiring .

《Mounting the adaptor plate》

① Putting the claw of the adaptor plate into the hole of the box. [Fig.2]

② Fix the box with the attached fixing screws at two places. [Fig.3]

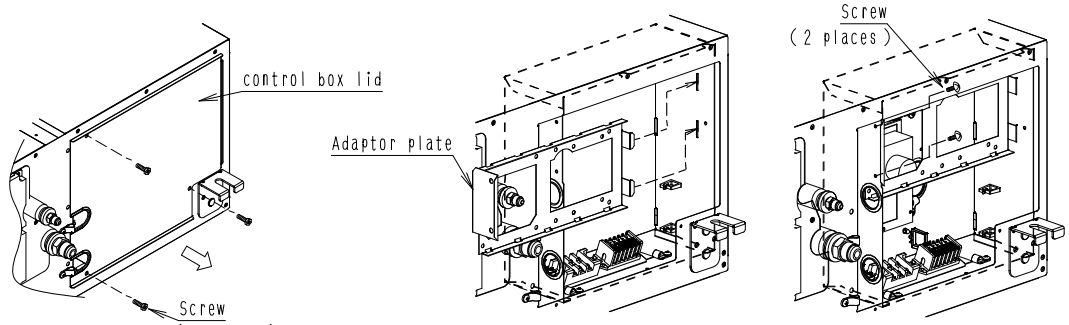

[Fig.1] [Fig.2] [Fig.3]

❷ How to mount the adaptor printed circuit board and handle the wiring

《How To Lead-in External Wires》

Lay the wires in the control box through the wire inlet on the side of the control box.

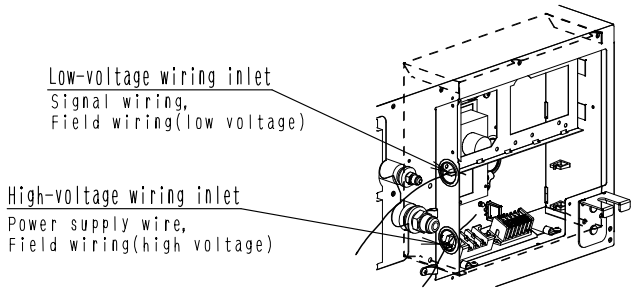

C: 2P226887

《How to mount the adaptor printed circuit board》

① Connect the wiring to the adaptor printed circuit board.
(The work is easier if the wiring is connected to the printed circuit board first.)
- See the instruction attached to the adaptor PCB for where to connect the wiring.

② Mount adapter printed circuit board onto the mounting plate (in the direction) as shown on figure 1 & 2.
- Use printed circuit board supports included in the package. (for any of below adapters.)

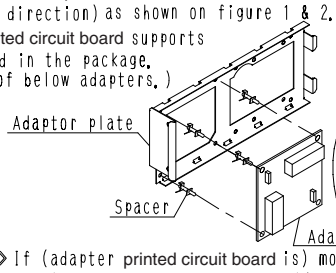

《Caution》 If (adapter printed circuit board is) mounted in a wrong direction, electric noise may cause malfunction of the system, or may influence upon other devices.

Adaptor PCB		Place where to mount
Adaptor for wiring	KRP1C64	(Fig. 1)
Wiring adaptor for electrical appendices (※1)	KRP4AA51 KRP2A61	(Fig. 1)
External control adaptor for outdoor unit (※1)	DTA104A61	(Fig. 2)

(※1) adapter cannot be mounted 2 or more together.

〈Adaptor for wiring, Wiring adaptor for electrical appendices〉

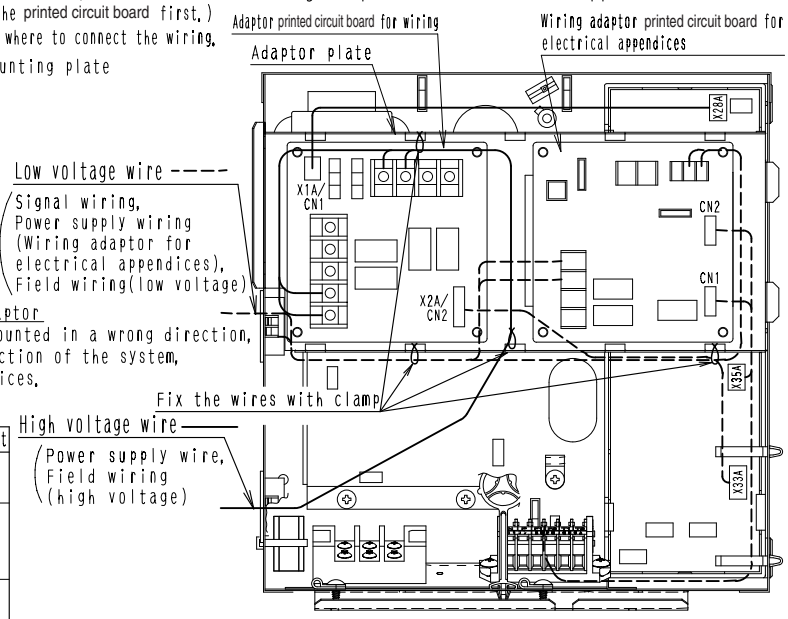

(Fig. 1)

《How to handle the wiring》

《Caution》 Do not make high-voltage and low-voltage wires run in parallel. Electric noise may cause malfunction of the system, or may influence upon other devices.

① Fix the internal wirings.
Bind the wiring from the adaptor plate to the indoor unit control box according to the drawing shown on the right with the attached clamp. (Put the clamping materials through the corner holes to fix wires.)
- Bind the the surplus wires and the other wiring together with the clamp.

② Put the control box lid, and wrap the wire sealing material around the wires so as to block the wire through holes.
- Take precautions to prevent the wires from getting caught.
- After all the wiring connections are done, fill in any gaps in the through holes with putty or insulation (procured locally) to prevent small animals and insects from entering the unit from outside. (If any do get in, they could cause short circuits in the control box.)

〈External control adaptor for outdoor unit〉

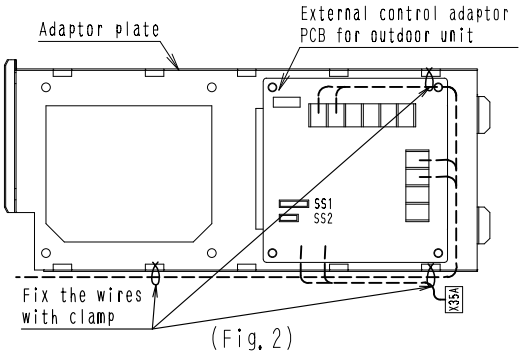

(Fig. 2)

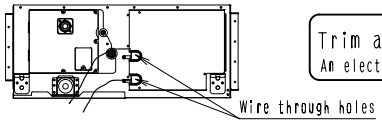

⚠Warning
Trim and lay the wiring neatly and attach the control box lid securely.
An electric shock or fire may result if the control box lid catches any wiring or the wires push up the lid.

③ Connect round crimp-style terminals provided with insulation sleeves to the terminal block for power supply.
- See the instruction attached to the indoor unit.

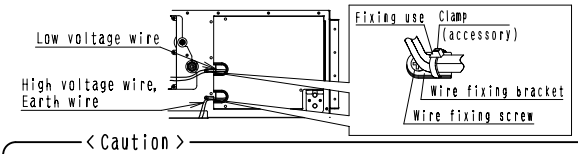

〈Caution〉
- Connect proper wires securely and fix the wires so that external force will not be imposed on the terminals.
- Use an appropriate screwdriver to tighten the terminal screws. The screw heads may be damaged if the screwdriver is too small and the terminal screws will not be tightened properly.
- Do not tighten the terminal screws excessively, or otherwise the screw heads may be damaged.
- Refer to the table below for the required tightening torque values of the terminal screws.

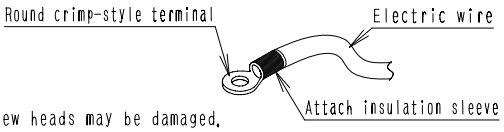

	Tightening torque (N・m)
Terminal block for remote controller and transmission wires	1.18 - 1.44
Terminal block for power supply, and wiring the units	1.18 - 1.44

C: 2P226887

10.7 KRP4AA93

Item \ Model			KRP4AA93
Applicable Adaptor			KRP4AA51 / KRP4AA52 / KRP4AA53 / KRP4A54
Installation			External
Material			Hot-dip zinc-coated steel sheet for painting
Dimensions	Width	mm	160
	Height	mm	180
	Thickness	mm	50

Installation Manual

REMARKS

- This box can be mounted on the small wall mounted type indoor unit.
  One box is required for every adaptor.
- When mounting the box, see the installation manual of the indoor unit as well as the installation manual of the box.

Combination table

Kit model name	Model name of indoor unit which allows the box to be mounted	
KRP4AA93	SkyAir	FAQ71BVV1B, FAY71LVE
	VRV	FXA-L type FXAQ-M(A) type FXAQ-P type

Parts included Make sure that the following parts are included.

Name	Installation box for adaptor PCB	Screw for fixing door	Plastic washer	Installation manual
Quantity	1 piece	1 piece	1 piece	1 sheet
Shape	① 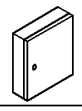	②	③	④ (This sheet)

❶ Selection of mounting location

- The location of the box must be near the indoor unit and where open/ close of the door can be handled smoothly.

Caution
- Make sure to select the flat area for mounting.

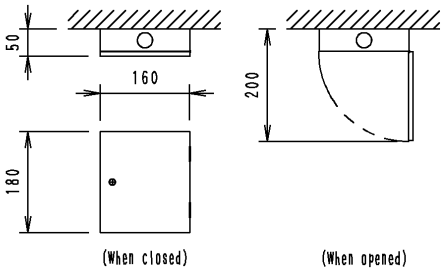

❷ Mounting the box

① Determine the wiring outlet side and open the knockout hole on the box.
- Three knockout holes for wiring outlet are located on the upper, the lower and the rear sides. (Shown right figs.)

② Determine the box mounting location properly so that it suits the wiring length and outlet location.

③ Fix the box with 4 screws (Field supplied)
- The dimensions for mounting is shown right.

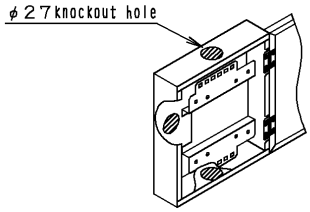

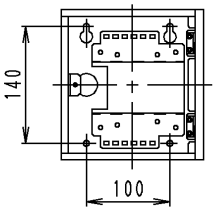

C: 3K012186D

③ Mounting the adaptor

- Fix 4 pieces of substrate supports to the holes of the box. The substrate supports are attached to the adaptor.
- Match the adaptor to substrate supports and fix it.

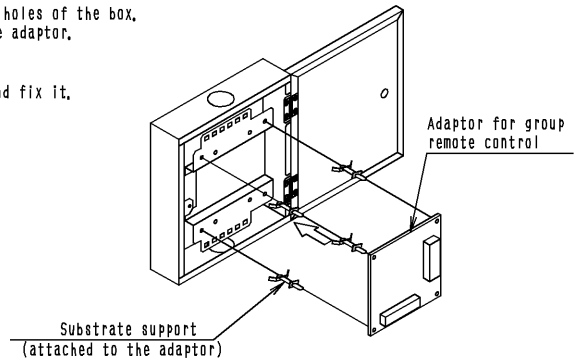

- For wiring, follow the installation manual attached to the adaptor.
- For wiring, fix the fixing plate with the clamp attached to the adaptor.

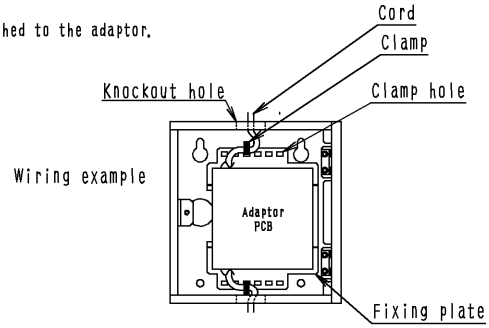

⚠Caution

- When passing wiring through the knockout holes, remove burrs around the knockout holes and protect the wiring with protective tape or conduit or bushing (field supply).
- If small animals or bugs might enter the unit, block off any gaps (hatching parts in below figure) with sealer (field supply).

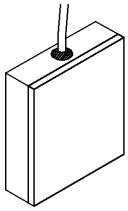

- After checking the wiring, close the door and fix the door with the plastic washer and the fixing screws.

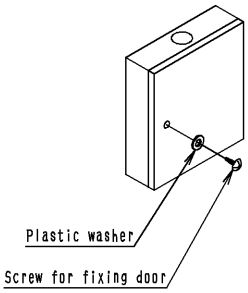

3K012186D

10.8 KRP1CA93

Item / Model			KRP1CA93
Installation			Internal
Material			Hot-dip zinc-coated carbon steel sheet
Dimensions	Width	mm	109
	Length	mm	124
	Depth	mm	38
Component parts			Installation box. Box cover. Clamp. Screws. Installation Manual.

Installation Manual

NOTE:

- This box can be installed to the ceiling-hang type unit.
- Each adapter plate requires one kit.

Parts included: Check the following parts are include with your unit.

Part name	Installation box main body	Installation box lid	Installation screw	Fixing screw for lid	Fixture	Installation manual	Clamp
Shape	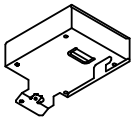	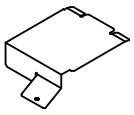	M4×8	M4×12		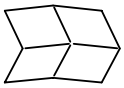	
Quantiity	1	1	2	2	2	1	4

Applicable adapter plate

Adapter plate name	Kit name
(Group) Remote control adapter	KRP2A62, KRP4AA52

1 Installation preparation

① Remove the electric parts box lid. (2 screws)
② Take out the electric parts box. (2 screws)
- Before taking out the electric parts box, disconnect the internal wiring from the clamp.

③ For indoor unit class 90 or higher, remove the reinforcement bar. (2 screws)

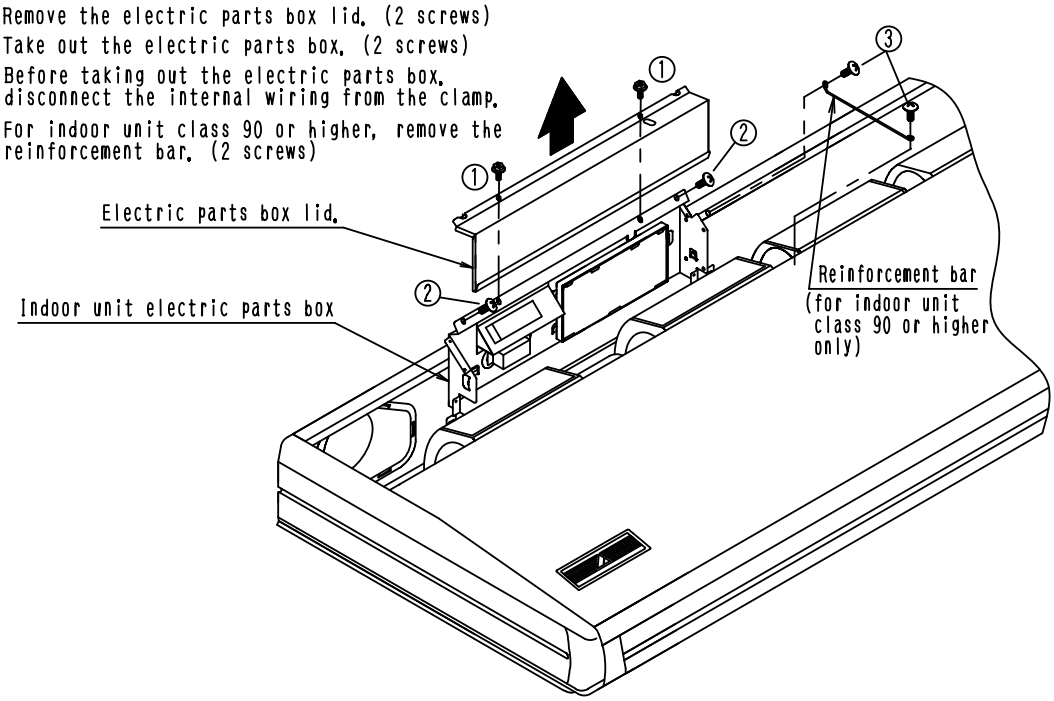

3K09595B

❷ Installation of Adapter Plate

①Install the fixture included with the kit to the electric parts box. (2 locations)

②Install the adapter plate to the adapter installation box.

- For installation direction of the adapter plate, refer to the installation manual included with the adapter plate.

③Temporarily hang the adapter installation box on the electric parts box of the indoor unit.

④Connect wires to the adapter plate and the indoor unit.

- For wiring locations, refer to the manual included with the adapter plate.
- Separate power wires and signal wires. Refer to the figure below on how to wire inside the electric parts box.
- Bind the wires taken out of the adapter plate together with the fixture installed in ① using the included clamp material.

⑤Fix the intemal wiring.

- Refer to the figure below on how to fix the wires inside the electric parts box to the clamp material.
- Bind the remaining wires with the clamp material, and house them inside the electric parts box.

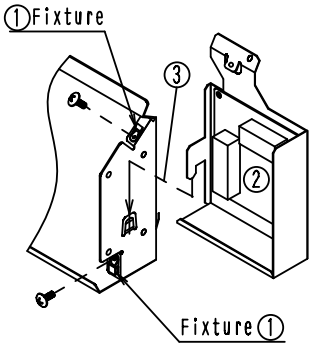

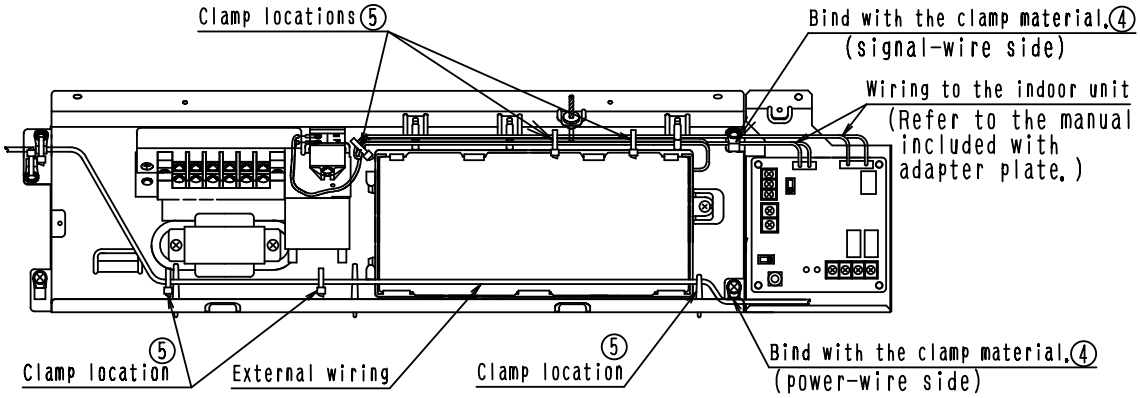

❸ Installation to the Indoor Unit

①Install the electric parts box and the adapter installation box.

- Place the removed intemal wiring clamp back in its original position.

②After installing the lid of the adapter installation box, install the lid of the electric parts box.

③For indoor unit class 90 or higher, install the reinforcement bar to the indoor unit.

*When installing, be careful not to get wires caught by parts.

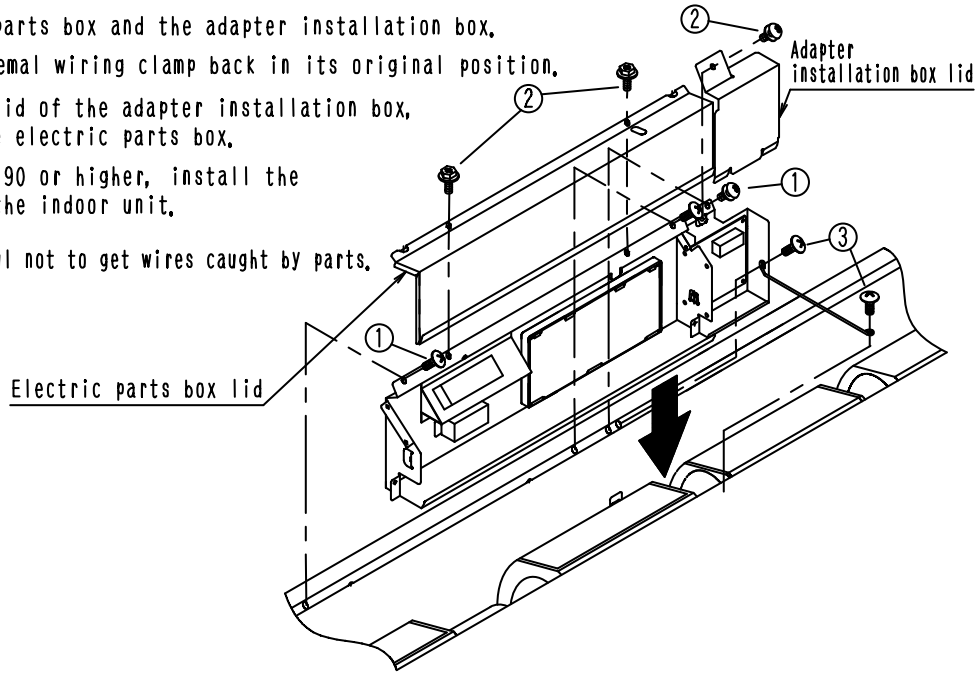

3K09595B

10.9 KRP1BA97

Item \ Model			KRP1BA97
Adaptor for Wiring			KRP4AA53
Installation			Internal
Material			Hot-dip zinc-coated carbon steel sheet
Dimensions	Width	mm	110
	Length	mm	165
	Depth	mm	41

Installation Manual

Notes

- This kit is also attachable to the ceiling-suspended type unit.
- Also refer to the installation manual attached to the indoor unit before installation.

Description of Parts

Make sure that the following parts are included.

Name	Installation box body	Installation box cover	Mounting screw	Cable Tie	Installation manual
Shape			M4 × 12		
Q'ty	1 unit	1 pc.	2 pcs.	2 pcs.	1 pc.

1. Preparation for mounting

(1) Remove the suction grill and open the el. compo. box lid. (2 screws) (Fig. 1-1)
(2) Remove the lead wire of the swing motor from the bell mouth (Fig. 1-1).
(3) Remove the bell mouth from the indoor unit body (No. of screws: 4) (Fig. 1-2).
(4) Use a nipper or cutter to cut a opening for bell mouth wiring (Fig. 1-3).
(5) Drill two holes in the concave of the bell mouth for the mounting screws (Fig. 1-3).

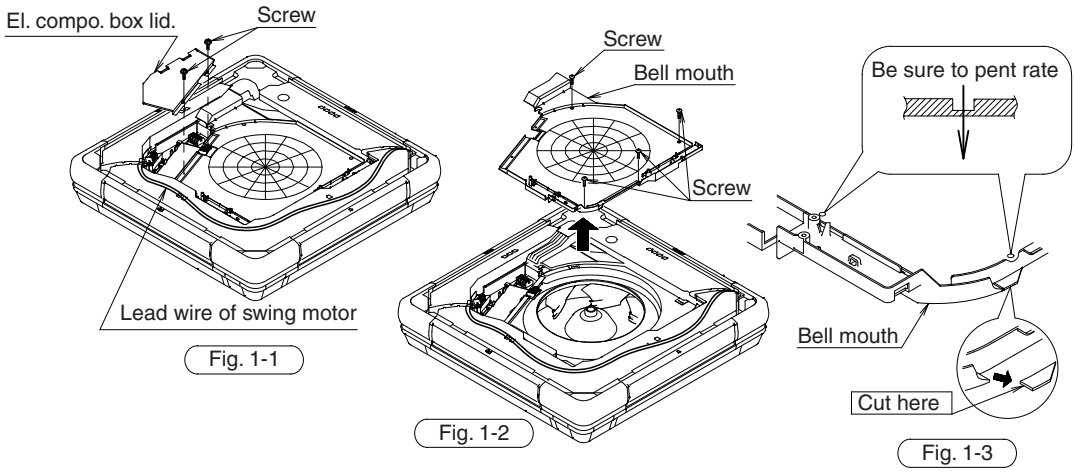

J: 2P002952E

2. Mounting the adaptor (Also refer to the installation manual attached to the adaptor.)

(1) Attach printed circuit board supports (4 pieces) to the holes of the installation box body (Fig. 2-1).
(Attach them before mounting the adaptor.)
Printed circuit board supports are supplied with the adaptor.

(2) Mount the adaptor according to the position of the printed circuit board supports.
Also connect the external wires to the adaptor.

(3) Attach the installation box body to the bell mouth with two screws supplied (Fig. 2-2).

(4) Bind the relay harness to the bell mouth with the clamp supplied with the adaptor. At this time, cut off the excess of the clamp. (Fig. 2-3)

(5) Attach the bell mouth to the indoor unit body (Fig. 2-3).

(6) Return the swing motor lead wire to the original positions and fix them.

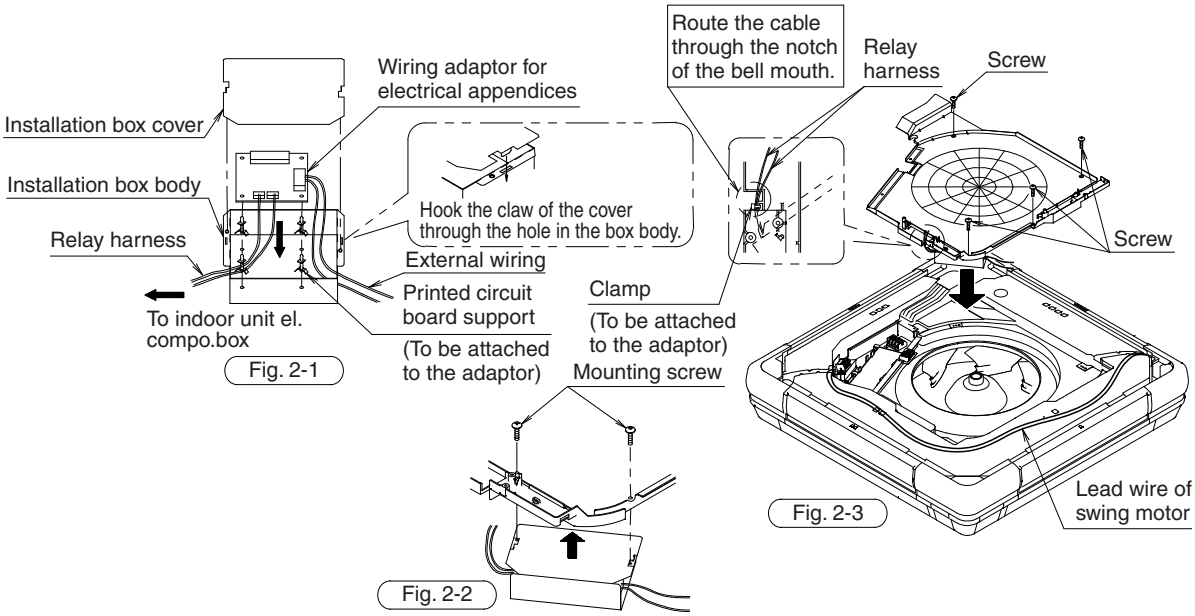

3. Wiring method

● Refer to the installation manual attached to the adaptor for electric wiring.

(1) After completing the installation work, use the cable sticker supplied and clamp attached to the adaptor to fix the cable as shown in the figure below. (Fig. 3-1)
- Pay attention not to bend the cable.
- Cut off the excess of the clamp.
- Coil excess lead wire on the bell mouth as shown in the figure.

(2) Coil excess lead wire in the switch box and secure it with a clamp supplied with the adaptor (Fig. 3-1).

(3) Mount the el. compo. box lid. (Fig. 3-2).

(4) Mount the suction grille.

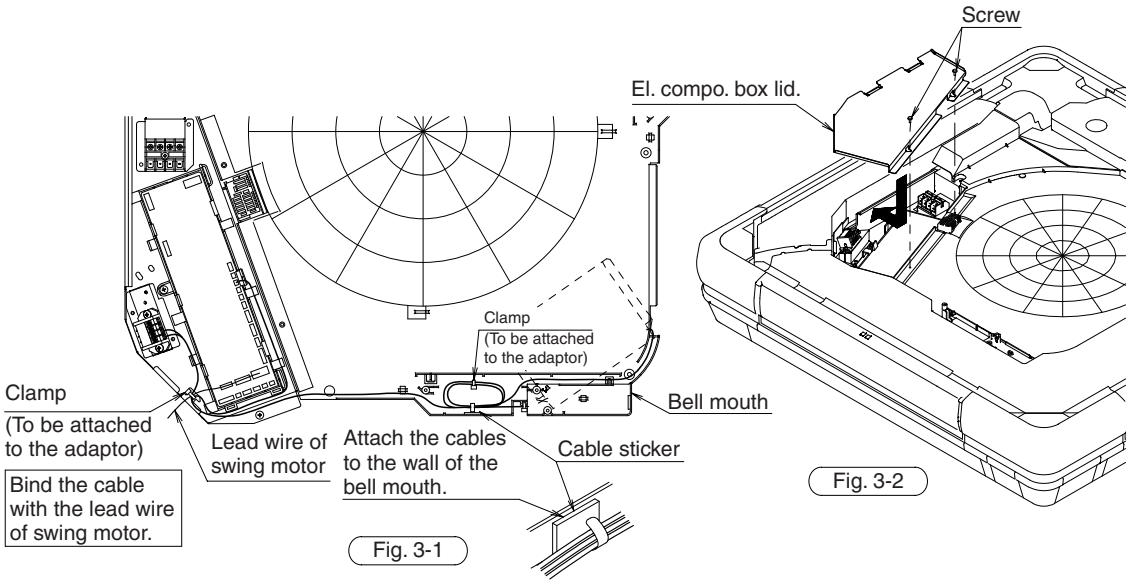

J: 2P002952E

11. External Control Adaptor for Outdoor Unit

11.1 DTA104A61 / DTA104A62 / DTA104A53

2

Accessories Check the following accessories are included in the kit before the installation.

External control adaptor for outdoor unit	
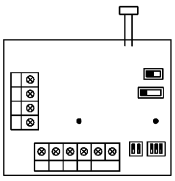 × 1	

PCB support	× 4
Clamp	× 3
Installation manual	× 8

NOTES
- The kit type (DTA104A61 type, DTA104A62 type, DTA104A53 type) varies according to air conditioner model.
- The installation box for adaptor PCB are required with the following air conditioner models.

FXC(Q) ····· KRP1B96
FXFQ-S, FXFQ-P • LU ····· KRP1H98
FXF····· KRP1DA98
FXH(Q) ····· KRP1CA93
FXA(Q) ····· KRP4AA93
FXD(Q), FXZQ ····· KRP1BA101
FXMQ-P ····· KRP4A96
FXYD ····· KRP1B100
FXS, FXSYQ ····· KRP4A91

1 General description of system

With the external control adaptor, outdoor units are controlled as follows.

1. Operation mode (COOL/HEAT/FAN) is switched simultaneously for more than one outdoor unit.
   - If switching operation mode by indoor unit remote controller or COOL/HEAT selector.
   - Except Heat Recovery model

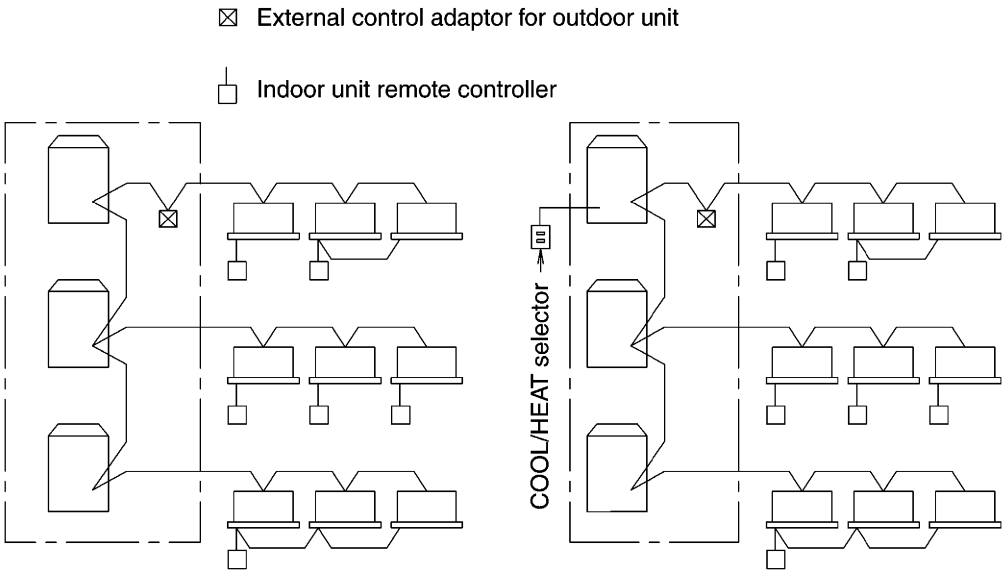

You can simultaneously switch operation mode for outdoor units in [ ].

C: 1PA63164G

2. Demand control and low-noise control are executed simultaneously for more than outdoor unit.

• Except Heat Recovery model

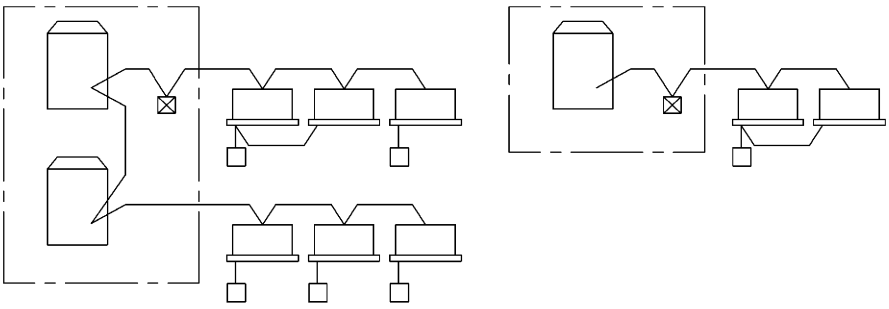

Demand control and low-noise control are executed simultaneously for outdoor units in [ ] .

2 Names of parts and functions

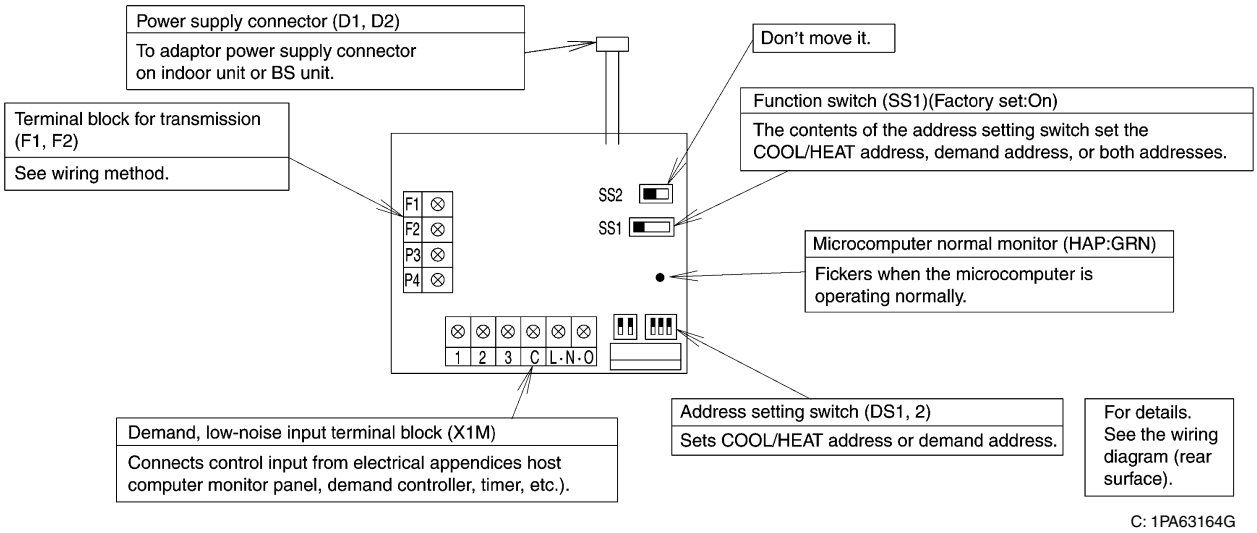

③ Installation

- Install the adaptor inside the electric parts box of indoor unit of same refrigerant circuit.
- If installing on a BS unit, install the adaptor inside the electric parts box of the BS unit.

BS Unit

BSV(Q)

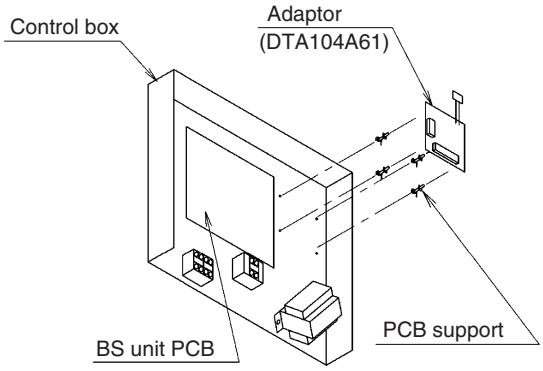

Ceiling Mounted Cassette Type

FXK(Q) (Corner model)

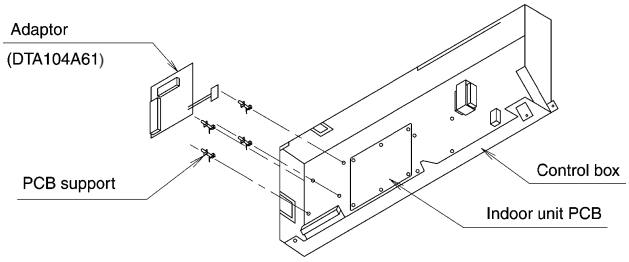

Ceiling Mounted Cassette Type

FXC(Q) (Double-flow model)

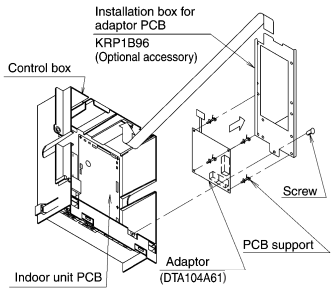

Note: Installation box for adaptor PCB is required to install the adaptor.

Ceiling Mounted Built-in Type

FXS
FXYB

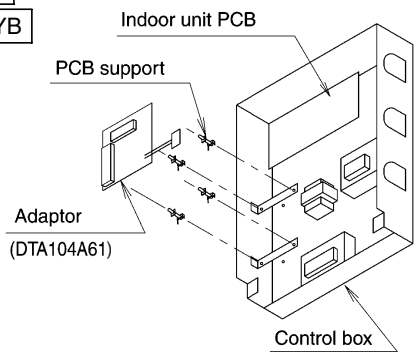

Note :
Installation box is necessary for second adaptor (FXS) .

Ceiling Mounted Cassette Type (Compact Multi Flow)

FXZQ

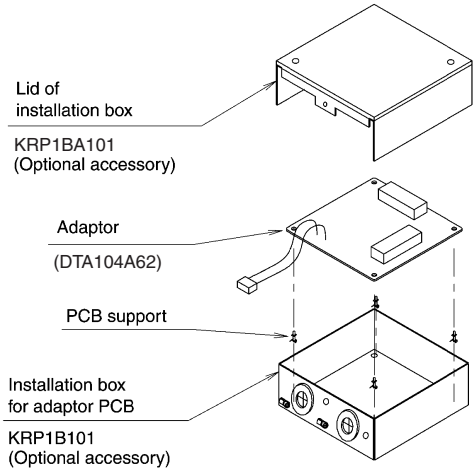

Note: Installation box for adaptor PCB is required to install the adaptor.

Slim Ceiling Mounted Duct Type

FXD (Q)

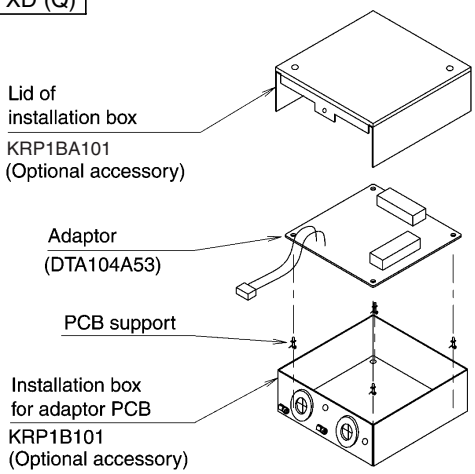

Note:
Installation box for adaptor PCB is required to install the adaptor.

C: 1PA63164G

Ceiling Mounted Duct Type

FXMQ20~140P See part of "**KRP4A96**".

FXM40-125

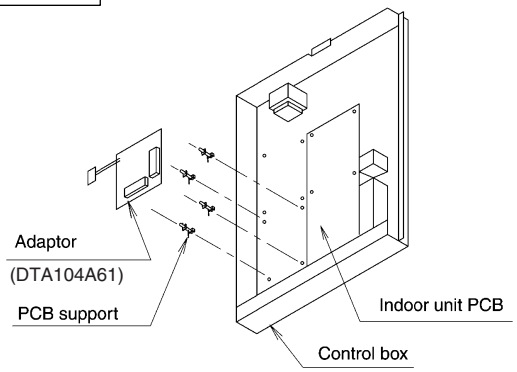

FXM(Q)200 · 250

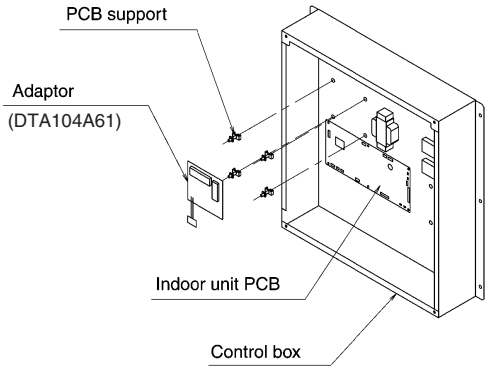

Ceiling Mounted Cassette Type

FXF(Q)

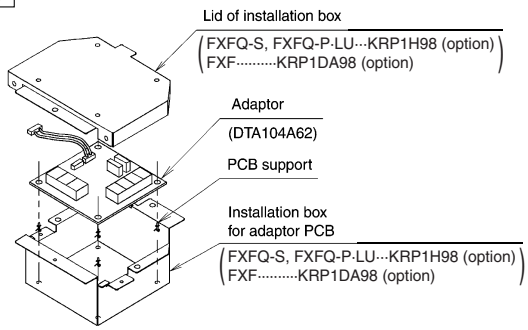

Note:
Installation box for adaptor PCB is required to install the adaptor.

Ceiling Suspended Type

FXH(Q)

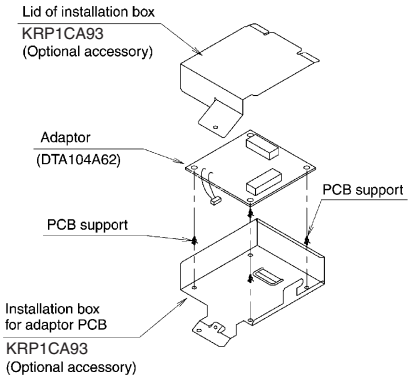

Note: Installation box for adaptor PCB is required to install the adaptor.

Floor Standing Duct Type

FXVQ125~250

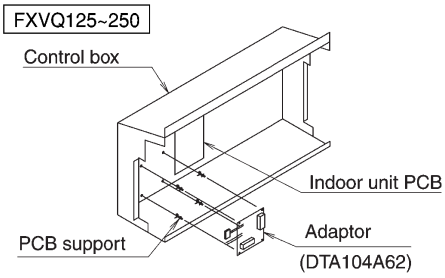

FXVQ400 · 500

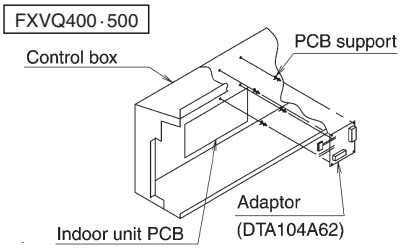

Floor Standing Type

FXL(Q)

FXN(Q)

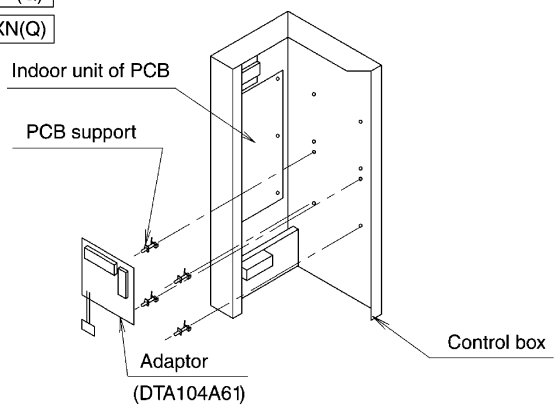

C: 1PA63164G

Wall mounted type

FXA(Q)

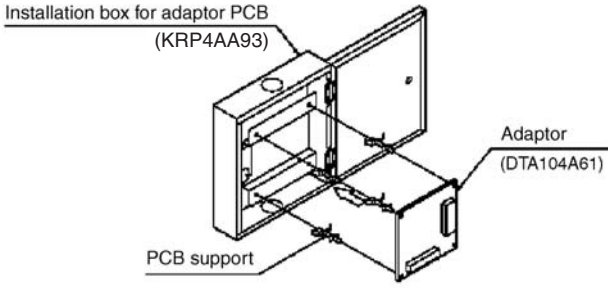

Ceiling Mounted Duct Type

FXYD-KA

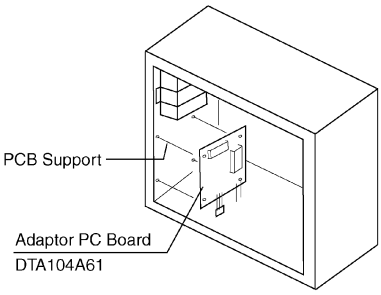

Note:
Installation box is necessary for second adaptor.

C: 1PA63164G

4 Electrical wiring

① Connect the power supply wiring from the adaptor to the adaptor power supply connector on the PCB of the Indoor unit or BS unit.
② Connect the transmission wiring to the various terminal blocks, and to the F1 and F2 terminals on the PCB. (Use double-core wiring with no polarity.)
③ Using the attached clamps, clamp the transmission wiring to weak field wiring, etc.

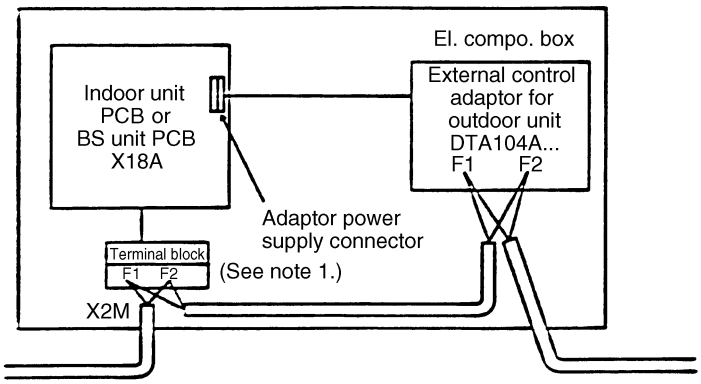

Note 1: If mounting on a BS unit, connect the BS unit's terminal block (F1 and F2, indoor unit side) with F1 and F2 of the adaptor.

NOTES

• (Transmission wiring specifications)

Sheathed wire
(2 wire)
0.75~1.25 mm^2

• (Transmission wiring length)

Malfunction of transmission may occur if the following limits are exceeded.
(Total wiring length: Max. 1000 m
No. of branches: Max. 16)

④ If carrying out demand or low-noise input, connect the adaptor's terminals as shown below.

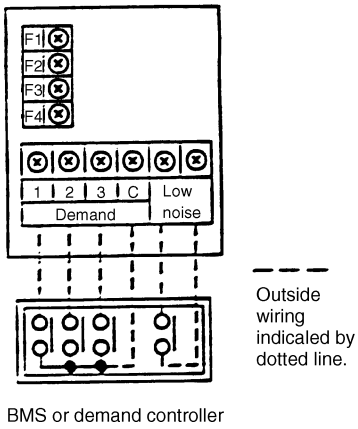

C: 1PA63165A

[Input signal]
Constant a contact
Input current is approx. 10 mA per contact.
For the relay contact, use a weak current contact.

[Outside wiring specifications]
Recommended wiring: 0.75-2 mm^2 sheathed wire
Wiring length: Within 150 m
Keep a minimum 50 mm from power supply wiring to prevent malfunction.

Demand input terminal
Short circuit between (Demand 1) - (C)...As a guideline, demand should be about 70%.
Short circuit between (Demand 2) - (C)...As a guideline, demand should be about 40%.
Short circuit between (Demand 3) - (C)...Forced thermo. OFF

Low-noise input terminal
When terminals are short-circuited during cooling, capacity save (outdoor unit fan low-speed turn, compressor frequency control) is carried out.
Use only at night when load is small.

How to set demand control in the field
1. Outdoor unit field setting
   - Setting mode 1...Turn ON low night noise control as explained in the outdoor unit's service manual.
   - Setting mode 2...Match low noise and demand addresses to the external control adaptor address.
2. External control adaptor settings
   - Function switch (SS1)
     Set SS1 to either "BOTH" or "DE".
   - Address setting switch (DS1,DS2)
     Match DS1 and DS2 to the low night noise and demand addresses of the outdoor unit.

<Initial Settings >

1. The contents of the various settings for unified switching of the operation mode (cool, heat, fan) are as follows.

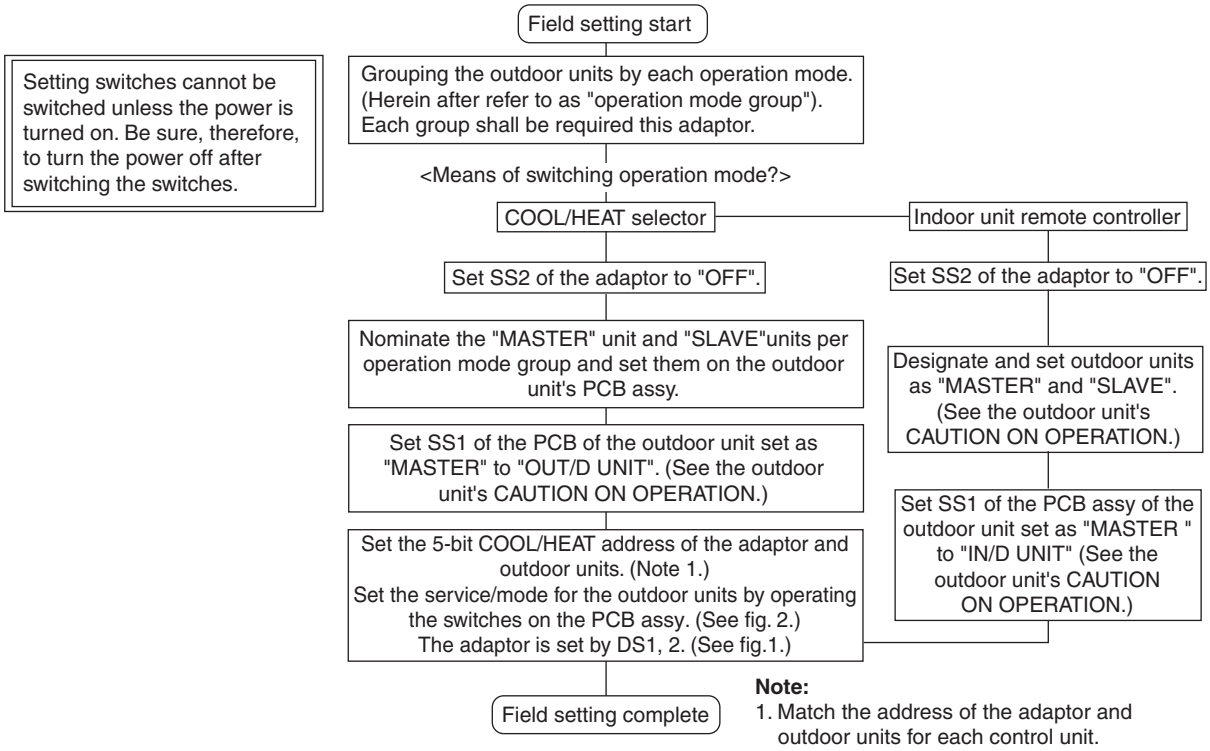

2. The contents of the various settings for unified switching of demand and low noise operation are as follows.

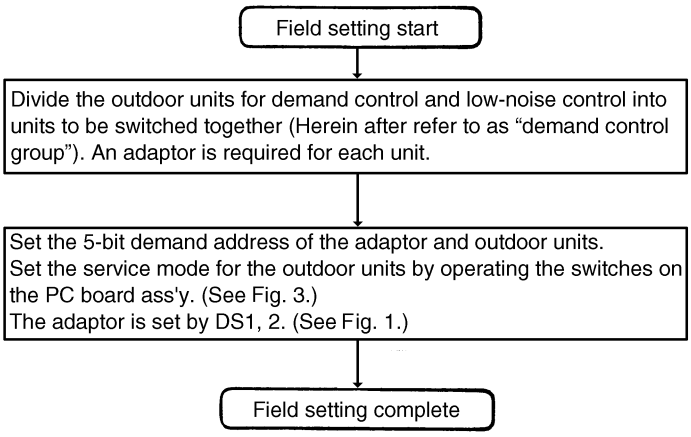

3. To carry out operation mode switching and demand control simultaneously

You can carry out operation mode switching and demand control simultaneously by setting function switch SS1 on the adaptor "BOTH". Only one address, however, can be set on the adaptor, so the "operation mode switch unit" and "demand control unit" are the same.

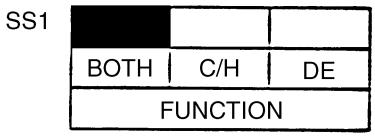

Factory setting to "BOTH".

Set the COOL/HEAT address, demand address and low night noise address, or both as needed.

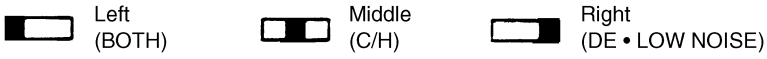

Note: The outdoor unit can have an independent "COOL/HEAT address" and "demand address". You can therefore set the "operation mode group" and "demand control group" to different ranges.

1PA63165A

Fig. 1 Setting of 5-bit COOL/HEAT address by DS1,2

Designate and set COOL/HEAT addresses 0-31 for each operation mode switch unit.

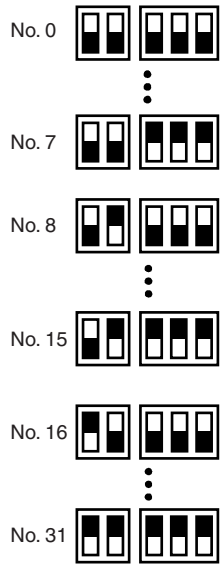

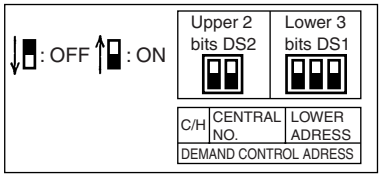

Fig. 2 (Ex.) To set the outdoor unit's COOL/HEAT address to No. 15 :

●—Off ○—On ◑—Flicker

Procedure	Setting contents	MODE	TEST	5-bit C/H SELECT IND	5-bit C/H SELECT MASTER	5-bit C/H SELECT SLAVE	5-bit L.N.O.P.	5-bit SEQ. START
When power turned on	Setting mode (factory setting)	● LED20	● LED21	○ LED22	● LED23	● LED24	● LED25	○ LED25
Hold down next page button for 5 sec.	Enters address setting.	○ LED20	● LED21	● LED22	● LED23	● LED24	● LED25	● LED25
Press operation button one time.	Enters COOL/HEAT address setting.	○ LED20	● LED21	● LED22	● LED23	● LED24	● LED25	○ LED25
Press confirmation button one time.	Make sure COOL/HEAT address has been entered.	○ LED20	● LED21	● LED22	● LED23	● LED24	● LED25	● LED25
Press operation button 15 times. (Address No. = Times pushed)	Sets COOL/HEAT address.	○ LED20	● LED21	● LED22	◑ LED23	◑ LED24	◑ LED25	◑ LED25
Press confirmation button two times.	Check COOL/HEAT address.	○ LED20	● LED21	● LED22	● LED23	● LED24	● LED25	● LED25
Press next page button one time.	Returns to set mode.	● LED20	● LED21	○ LED22	● LED23	● LED24	● LED25	○ LED25

Fig. 3 (Ex.) To set the outdoor unit's demand address to No. 7 :

●—Off ○—On ◑—Flicker

Procedure	Setting contents	MODE	TEST	5-bit C/H SELECT IND	5-bit C/H SELECT MASTER	5-bit C/H SELECT SLAVE	5-bit L.N.O.P.	5-bit SEQ. START
When power turned on	Setting mode (factory setting)	● LED20	● LED21	○ LED22	● LED23	● LED24	● LED25	○ LED25
Hold down next page button for 5 sec.	Enters address setting.	○ LED20	● LED21	● LED22	● LED23	● LED24	● LED25	● LED25
Press operation button two times.	Enters demand address setting.	○ LED20	● LED21	● LED22	● LED23	● LED24	○ LED25	● LED25
Press confirmation button one time.	Make sure demand address has been entered.	○ LED20	● LED21	● LED22	● LED23	● LED24	● LED25	● LED25
Press operation button 7 times. (Address No. = Times pressed)	Sets demand address.	○ LED20	● LED21	● LED22	● LED23	◑ LED24	◑ LED25	◑ LED25
Press confirmation button two times.	Check demand address.	○ LED20	● LED21	● LED22	● LED23	● LED24	● LED25	● LED25
Press next page button one time.	Returns to set mode.	● LED20	● LED21	○ LED22	● LED23	● LED24	● LED25	○ LED25

1PA63165A

12. Adaptor for Multi Tenant

12.1 DTA114A61

Accessories Check that the following accessories are provided with the adaptor before installation.

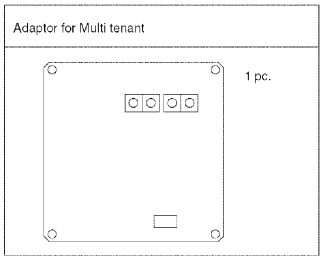

PCB support	4 pcs.
Tiewrap	4 pcs.
Relay harness	4 pcs. (see the table on the right-hand side for applicable models)
Installation Manual	1 pc.

Applicable models	Relay harness
FXFQ~P	700 — White — White, 4 pins — UL electric wire
FXMQ~P	350 — White — White, 4 pins — UL electric wire
BSVQ~P BSV4(6)Q~P	260 — White — Blue, 3 pins — UL electric wire
FXAQ~P FXAQ~M	1900 — White — White, 3 pins — VCTF electric wire

Note

- An adaptor mounting plate and mounting box are required in addition to the provided component parts in the case of mounting the adaptor to the following models.

FXFQ~P: KRP1H98
FXMQ~P: KRP4A96
FXAQ~P, FXAQ~M: KRP4AA93

- Both ends of harness are for connection of PCB of indoor unit (or BS unit) and for connection of adaptor for multi tenant. Be careful when connecting them.

❶ GENERAL DESCRIPTION OF SYSTEM

- The use of this adaptor allows the system to operate with no system error indication in the event of the interruption of power supply to other indoor units. (In the case of the following diagram, there will be no error indication on the remote controllers of tenant 1 or tenant 3 or tenant 4 in the event of the interruption of power supply to tenant 2.)

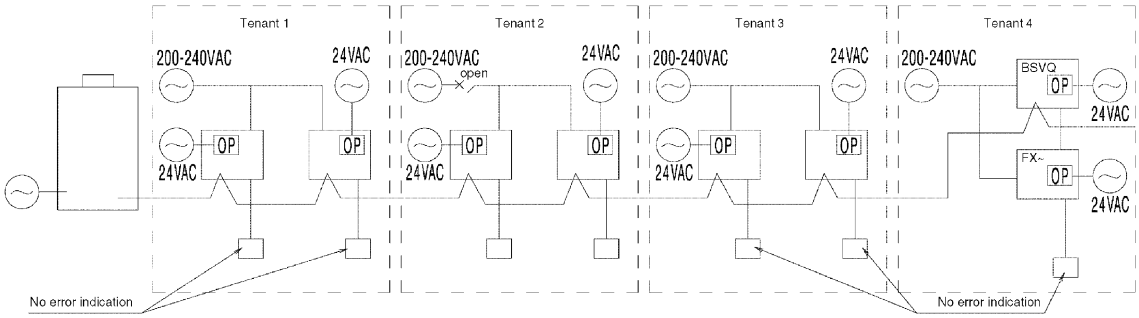

❷ NAMES AND FUNCTIONS

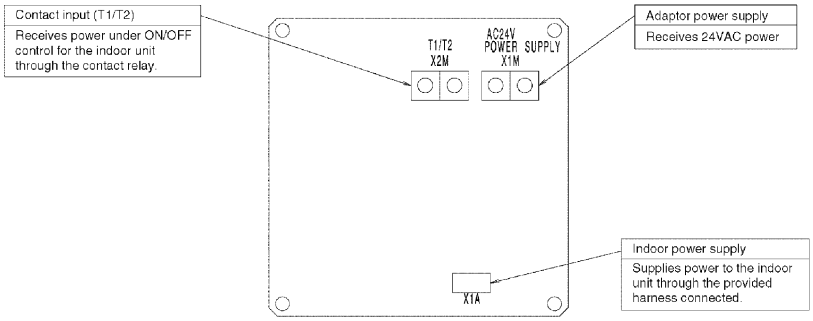

C: 1P223254A

❸ INSTALLATION

⟨⟨Ceiling-mounted Cassette Round-flow Type⟩⟩

FXFQ-P

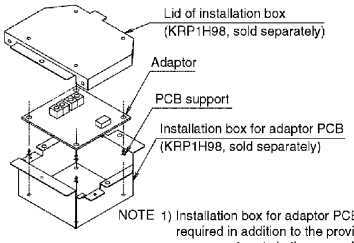

NOTE 1) Installation box for adaptor PCB is required in addition to the provided component parts in the case of mounting the adaptor.
2) Connect the wiring to the adaptor PCB first. The work will be easier.
(Refer to ❺ METHOD OF WIRING.)

⟨⟨Ceiling-mounted Duct Type⟩⟩

FXMQ-P

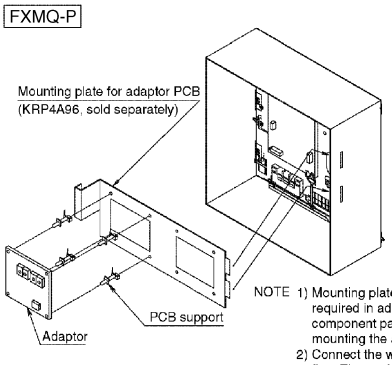

NOTE 1) Mounting plate for adaptor PCB is required in addition to the provided component parts in the case of mounting the adaptor.
2) Connect the wiring to the indoor PCB first. The work will be easier.
(Refer to ❺ METHOD OF WIRING.)

⟨⟨Wall-mounted type⟩⟩

FXAQ-P
FXAQ-M

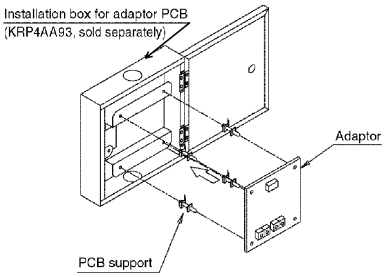

NOTE) Installation box for adaptor PCB is required in addition to the provided component parts in the case of mounting the adaptor.

⟨⟨BS unit⟩⟩

BSVQ-P
BSV4(6)Q-P

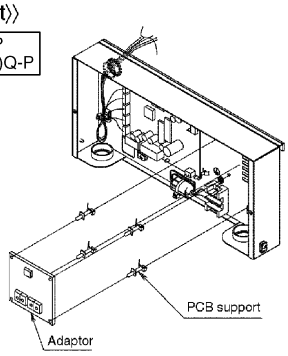

❹ ELECTRIC WIRING

• Example with FXFQ-P, FXAQ-P, FXAQ-M, and FXMQ-P

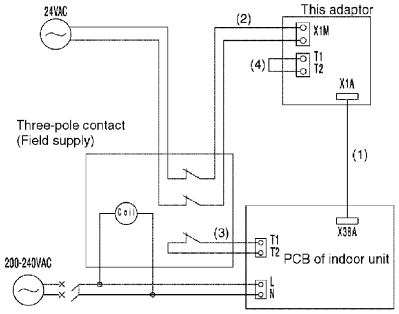

(1) Connect this adaptor and the PCB of the indoor unit with the provided relay harness (varying with each indoor unit model).
(2) Connect the 24VAC (±20%) power supply to the X1M terminals of the adaptor through the normally closed contacts of the relay. Be sure to contact the relay contacts to both poles of the power supply so that the positive and negative lines of the power supply will be turned off simultaneously. A transformer may be used for the 24VAC power supply provided for each adaptor on the condition that the transformer has a capacity of 24VA or over.
(3) Provide a relay (with a normally closed contact) between the T1 and T2 terminals of the PCB.

Minimum contact load: 1mA normally closed contact at 15VDC Rated current: 3 A min. Wire specifications: Vinyl cord with sheath or cable (2 wire) Wiring thickness: 0.75 to 1.25 mm² Wiring length: 100 m max.

(4) Short-circuit the T1 and T2 terminals of the adaptor.

• Example with BSVQ-P, BSV4(6)Q-P

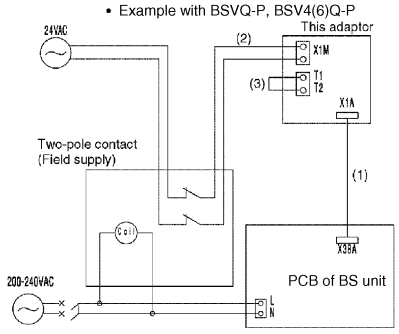

(1) Connect the adaptor and PCB of BS unit through the relay harness.
(2) Connect the 24VAC (±20%) power supply to the X1M terminals of the adaptor through the normally closed contacts of the relay. Be sure to contact the relay contacts to both poles of the power supply so that the positive and negative lines of the power supply will be turned off simultaneously. A transformer may be used for the 24VAC power supply provided for each adaptor on the condition that the transformer has a capacity of 24VA or over.

(3) Short-circuit the T1 and T2 terminals of the adaptor.

Minimum contact load: 1mA normally closed contact at 15VDC Rated current: 3 A min. Wire specifications: Vinyl cord with sheath or cable (2 wire) Wiring thickness: 0.75 to 1.25 mm² Wiring length: 100 m max.

C: 1P223254A

5 METHOD OF WIRING

⟨CAUTION⟩

- For connection to the terminal block, be sure to use a ring type crimp style terminal.
  Also insulate the crimping portion, for example, by mounting an insulation sleeve.
- For wiring, use the specified wire to connect it securely and fix it so that external force is not applied to the terminal.
- For tightening the terminal screw, use a proper screwdriver.
  A smaller size screwdriver may damage the screw head, resulting in improper tightening.
- If the terminal screw is secured too tightly, the screw may be damaged.
  For tightening torque for terminal screw, see the table on the right-hand side.

	Tightening torque (N · m)
Terminal block of adaptor for multi tenant (X1M, X2M)	1.18~1.44

● FXFQ-P (Ceiling-mounted Cassette Round-flow Type)

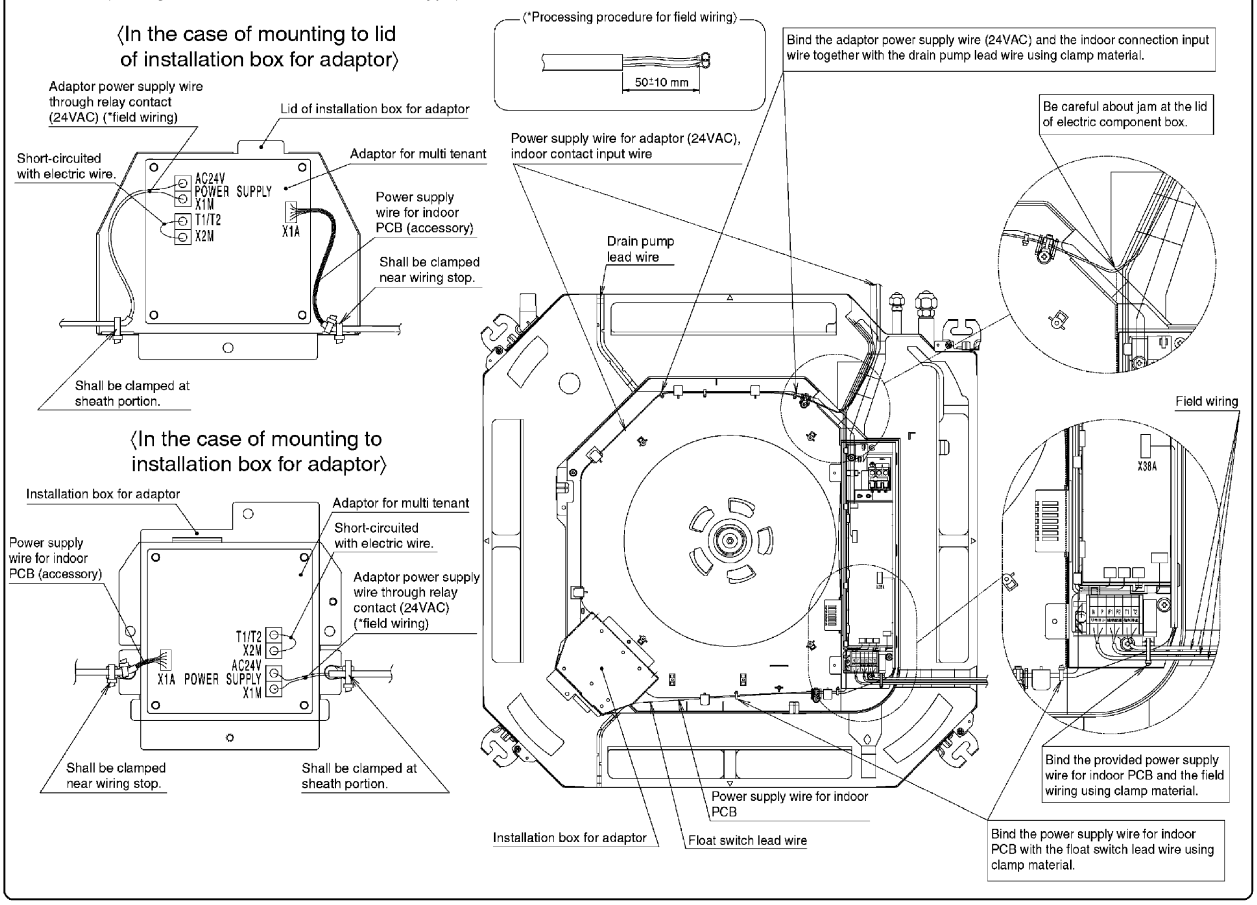

●BSVQ-P, BSV4(6)Q-P (BS unit)

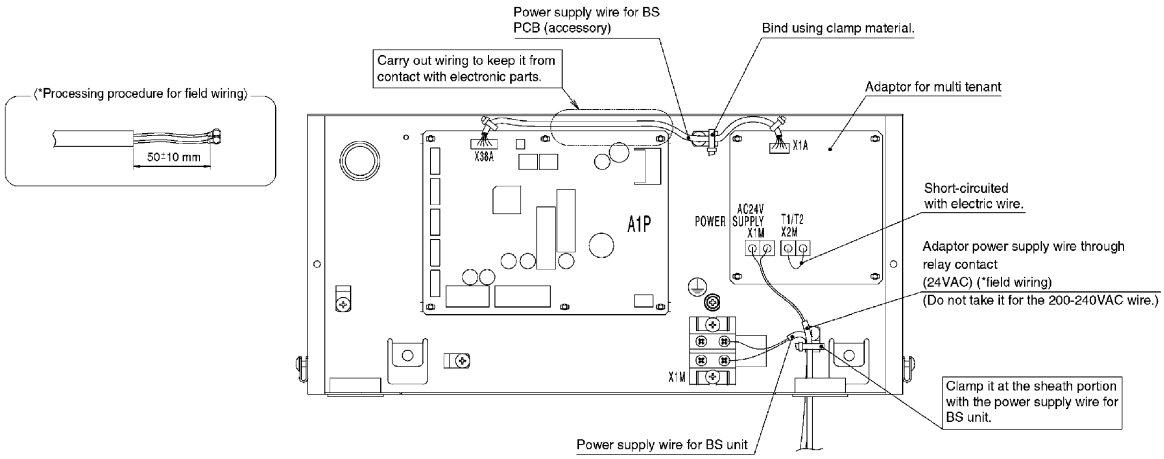

C: 1P224646A

●FXMQ-P (Ceiling-mounted Duct Type)

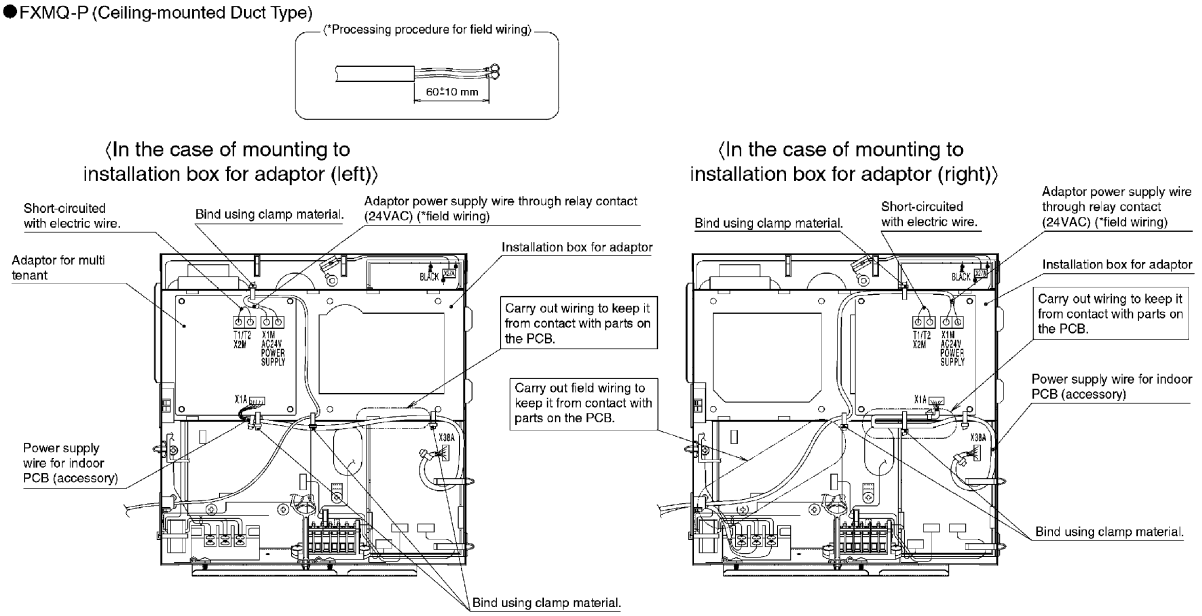

●FXAQ-P, FXAQ-M (Wall-mounted type)

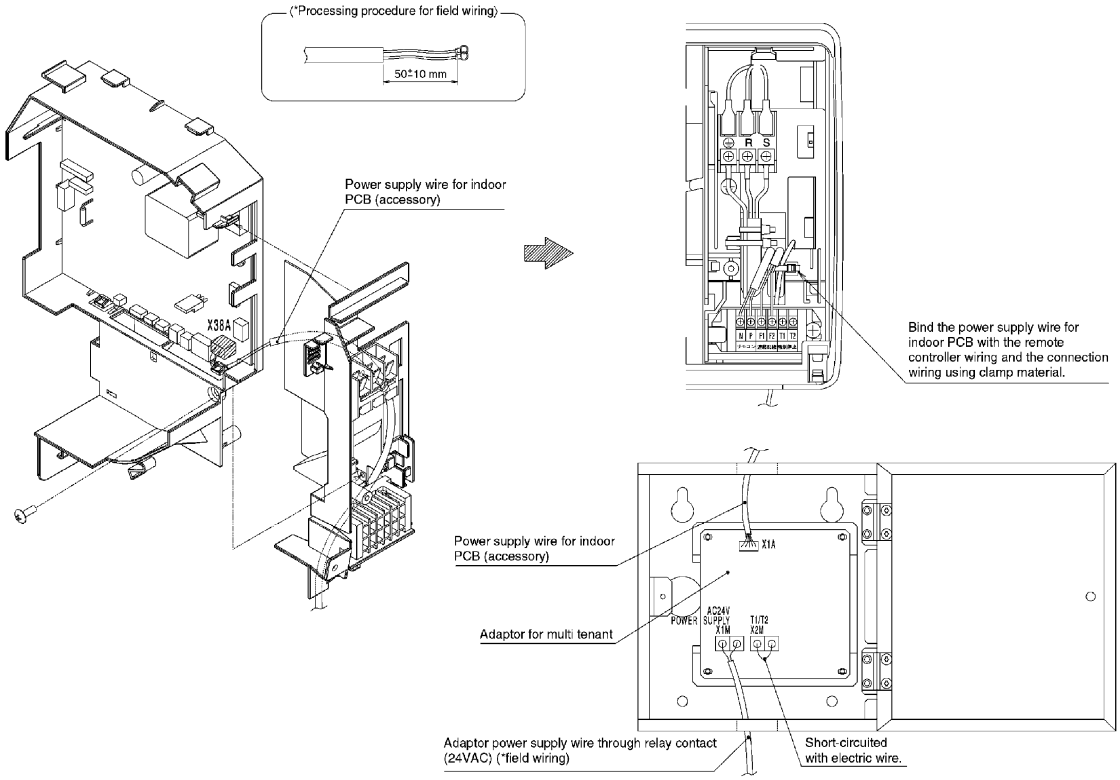

❻ FIELD SETTING

Follow the "FIELD SETTING" in the installation manual of the remote controller for the indoor unit and make a necessary field setting in the remote controller after turning the air conditioner ON.

- Set the remote controller to field set mode, select Mode No. "12", and set the FIRST CODE NO. to "1" and the SECOND CODE NO. to "04".
  (The SECOND CODE NO. is factory set to "01".)
  Note: The remote control terminals (T1 and T2) of the indoor unit is for multi-tenant use. Therefore, the COMPUTERIZED CONTROL of the indoor unit is not available.

C: 1P224646A

13. External Control Adaptor for Cooling / Heating

13.1 KRP6A1

Dimensions Unit (mm)

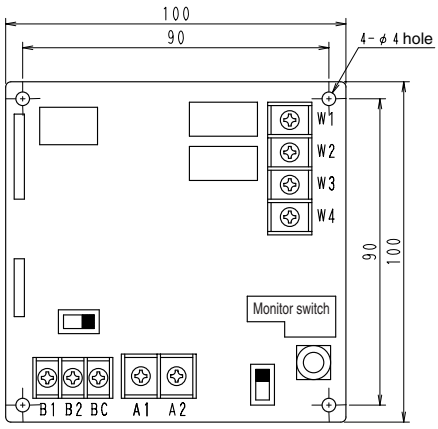

JC: D3K2124

DAIKIN Air Conditioner

Installation Manual for External Control Adaptor for Cooling/Heating

KRP6A1

Accessories Check that the following accessories are included in the kit.

External control adaptor for cooling/heating	Relay harness
1 pc.	1 pc. for each (1) (2)

Printed circuit board supports	4 pcs.
Cable ties	3 pcs.
Installation manual	1 pc.

1 System Overview

This kit enables various kinds of external controls (remote switching of operation mode, displaying of operational information).
The external control adaptor for cooling/heating (KRP6A1) allows the user to build the following systems.
Note that the adaptor cannot be used in combination with other centralized control devices.

1. Individual control (Each indoor unit is controlled individually.)

This system requires the part below.
○External control adaptor for cooling/heating ·····KRP6A1

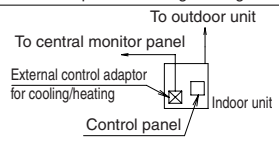

● **For Floor Standing Duct Type**

2. Group control (Multiple indoor units are controlled as a group.)

This system requires the part below.
○External control adaptor for cooling/heating ·····KRP6A1

● **For Floor Standing Duct Type**

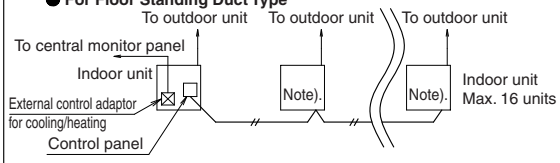

Note). Remove the connection to the control panel.

3 Installation

FXVQ125-250M

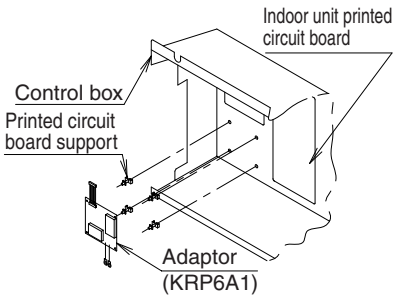

FXVQ400 · 500M

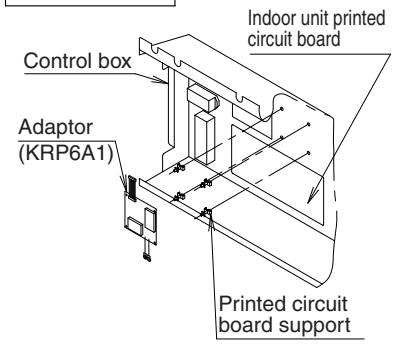

■ Names and Functions of Parts

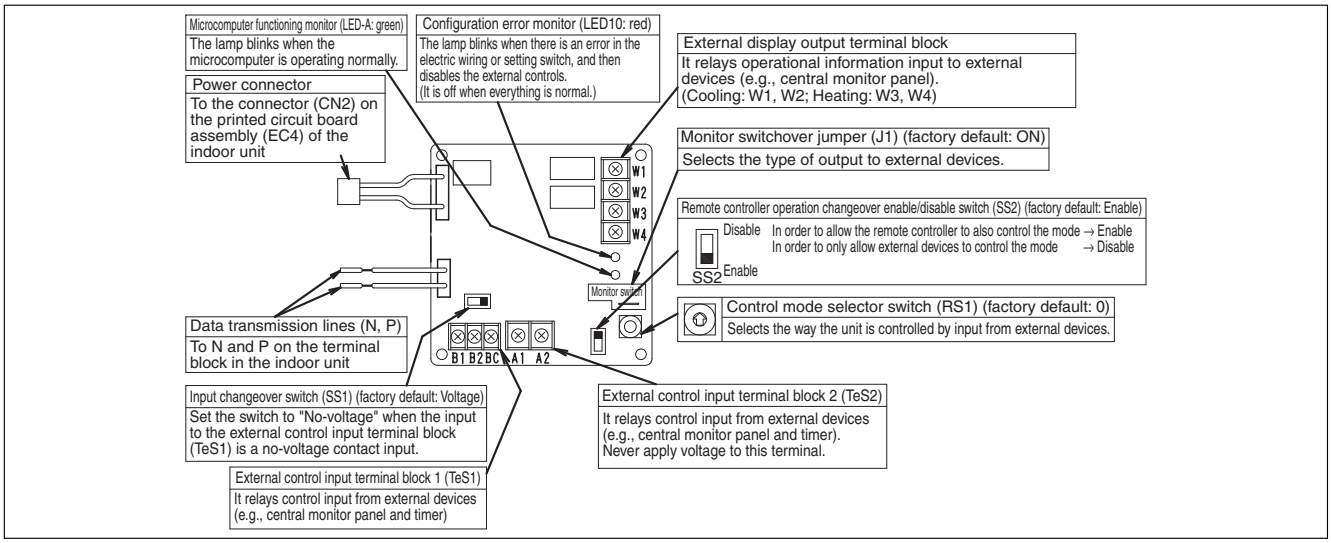

■ Electric Wiring

① First, connect the wiring between the indoor unit and outdoor unit, between each unit and a power source, and between the indoor unit and remote controller. Then, make sure that the system operates properly.
(Especially, when using the group control function of the remote controller, check the wiring between units.)
For details, consult the installation manuals for the indoor and outdoor units.

② Finally, connect the wiring to external devices such as the central monitor panel, and configure other settings.

See "Wiring to External Devices (central monitor panel, etc.)."

Wiring to the Indoor Unit

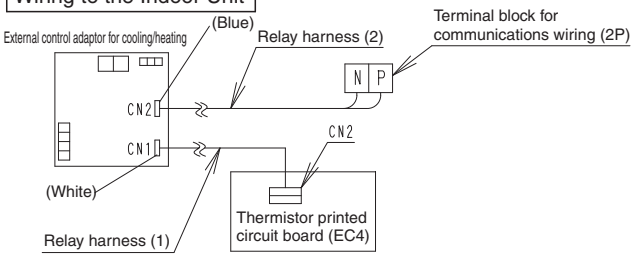

※ For Floor Standing Duct type

Connect as shown in the figure above using the supplied relay harnesses (1) and (2).
- Connect the relay harness (1) to the connector (CN2) on the thermistor printed circuit board.
- The relay harness (2) has no polarity. Connect it to terminals N and P on the terminal block for communications wiring in the switch box of the indoor unit.

Be sure to connect the control panel or a remote controller to the indoor unit.

1PA66259A

Wiring to External Devices (central monitor panel, etc.)

1. External control input (operation)

Connect wiring in one of the following two ways depending on whether the input is "Voltage" or "No-voltage".

① For "Voltage" input

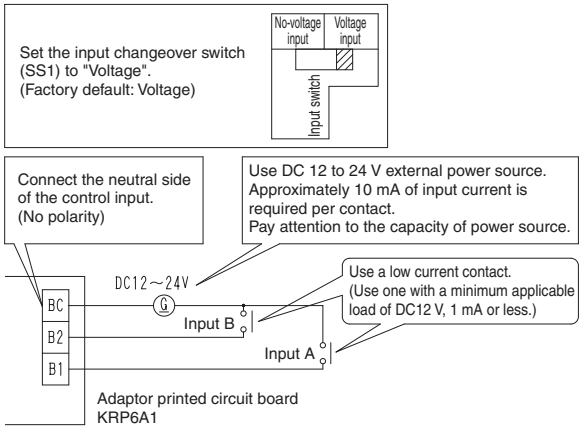

■ Electric Wiring

② For "No-voltage" input

Set the input changeover switch (SS1) to "No-voltage".

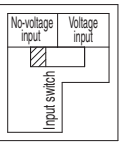

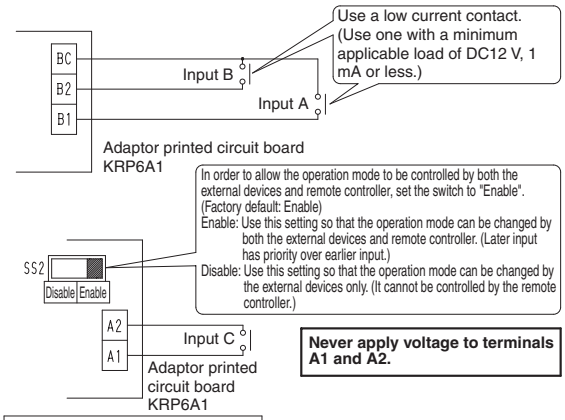

Never apply voltage to terminals A1 and A2.

(Wiring specifications)
Type of wire: Sheathed vinyl cord or cable
Gauge of wire: 0.18 to 1.25 mm²
Total wiring length: Max. 150 m

<Note>
Keep the wiring away from power lines to prevent malfunction.

2. Setting the control mode selector switch (RS1)

Select from the following control modes at input A using the control mode selector switch on the adaptor printed circuit board.

Enable remote controller/Disable remote controller is only relevant to starting up and shutting down the unit. (Temperature setting, airflow and wind direction can be controlled.)

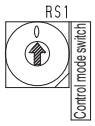

(Factory default) Position: 0

① When using only the individual display function

Position	Function
0	Individual display (input ignored)

② When operating the unit using constant input
<Input A>

Position	Function	When input A is ON	When input A is OFF
1	Remote controller disabled	Run (remote controller always disabled)	Shut off + Remote controller disabled
2	The centralized control device has priority	Run + Remote controller enabled	
3	Remote controller can shut off system	Run + Remote controller can only shut off unit (Unit cannot be started by remote controller.)	
4	Remote controller can turn system on/off	Only remote controller enabled (Unit cannot be started by external devices.)	

• For enabling/disabling the remote controller, only the ability to start up and shut down the unit are determined by the position of the above switch. Enabling/disabling operation mode switchover is controlled by the remote controller operation changeover enable/disable switch.

③ When operating the unit using instantaneous input
(Use an instantaneous input of 200 msec or longer.)

<Input A>

Position	Function	Input A
5	Remote controller disabled	ON shuts off the unit while it is running, and starts up the unit when it is off.
6	Later input has priority over earlier input.	ON shuts off the unit while it is running, and starts up the unit when it is off. (Remote controller always enabled.)

• Inputs B and C are as shown in the table below, regardless of the position of the control mode selector switch (RS1). Only constant input is available.

<Input B, C>

Input B	Input C	Operation mode
ON	OFF	Fan
ON	ON	Fan
OFF	OFF	Cooling
OFF	ON	Heating

3. Capturing display signals

Select from the following information displayed via outputs Ry1 and Ry2 from the monitor switchover jumper (J1) on the adaptor printed circuit board.

① When the monitor switch (J1) is ON (factory default: ON)

The operation display A output terminals (W1, W2) and the operation display B output terminals (W3, W4) are no-voltage constant contact outputs.
(The allowable current per contact is 10 mA to 3 A.)

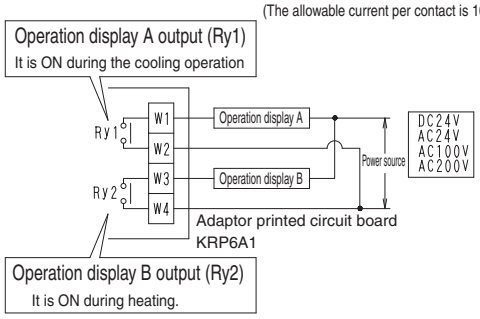

<Note>
When an AC 100 V or AC 200 V power supply is used, keep the wiring away from the input wiring.

The display output is as shown in the table below.

Output	Both Ry1 and Ry2 are OFF.	Both Ry1 and Ry2 are ON.	Only Ry1 is ON.	Only Ry2 is ON.
Display	Power off	Fan	Cooling	Heating

② When the monitor switch (J1) is OFF

The normal operation output terminals (W1, W2) and the error output terminals (W3, W4) are no-voltage constant contact outputs.
(The allowable current per contact is 10 mA to 3 A.)

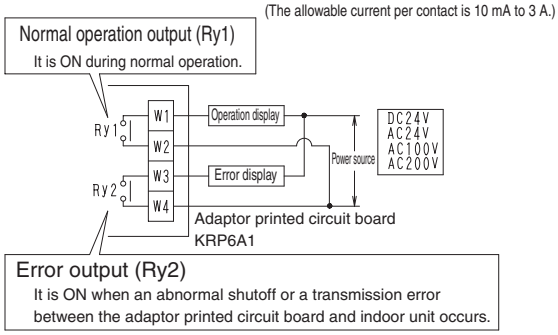

<Note>
When an AC 100 V or AC 200 V power supply is used, keep the wiring away from the input wiring.

The display output is as shown in the table below.

Output	Both Ry1 and Ry2 are OFF.	Only Ry1 is ON.	Only Ry2 is ON.
Display	Power off	Normal operation	Abnormal shutoff or a transmission error between the adaptor printed circuit board and indoor unit

C: 1PA66259A

■ Electric Wiring

There are certain restriction when the external control adaptor for cooling/heating (KRP6A1) is connected to a *VRV* system.

(1) The indoor units without cool/heat selection eligibility cannot accept input about cooling, heating or fan.

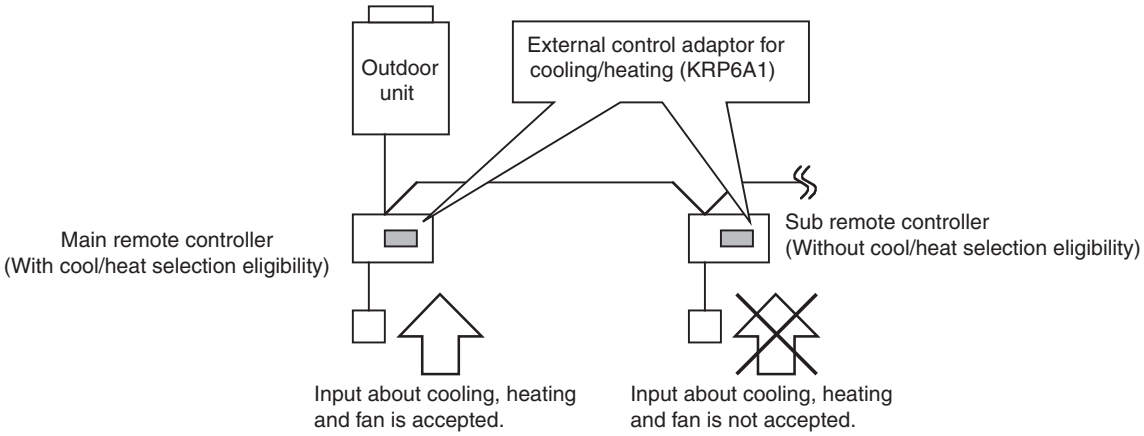

(2)Indoor units without cool/heat selection eligibility can be monitored, however the following settings are required.

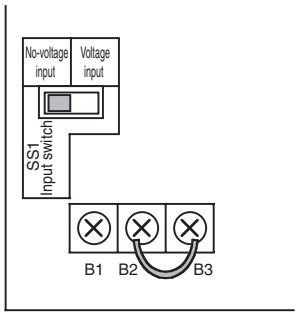

1. Set the input changeover switch (SS1) on the external control adaptor for cooling/heating to no-voltage input.
2. Short-circuit B2 and BC.

Note: Use this setting only for an adaptor connected to a sub remote controller.

∗ When changing cool/heat selection eligibility, these settings need to be changed.

14. Remote Controller Box with Key

14.1 KRCB37-1

Dimensions Unit (mm)

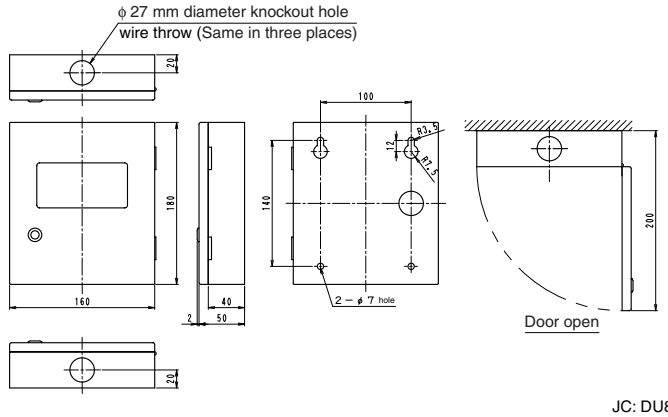

JC: DU827-233

Installation Manual

DAIKIN Air Conditioner Installation Manual for Remote Controller Box with Key

KRCB37-1 Be sure to read this manual before installing, and follow the instructions when conducting the installation. 2PA50647-1A

Note

- This remote controller box can hold LCD wired remote controllers for SkyAir and *VRV* systems.
- Check the name of the remote controller kit in the table below before installation.
- When installing the box, refer also to the installation manual attached to the indoor unit and the installation manual (installation procedures) attached to the remote controller.
- The remote controller thermostat sensor cannot be used when this remote controller box is installed.

For SkyAir — Do not change the settings to the remote controller thermostat sensor.

For *VRV* — Set the remote controller thermostat sensor to "Not used". (To learn how to set it, refer to Field setting method in Installation Manual of the remote controller.)

Parts — Check that the following parts are included in the kit.

Name	Remote controller box	Keys	Screws for attaching base case	Installation manual
Shape	① 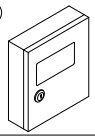	② 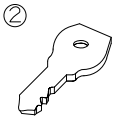	③ M4×12	④ 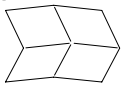
Quantity	1 pc.	2 pcs.	2 pcs.	1 pc. (this document)

List of compatible remote controllers

Name of kit	Compatible remote controllers	
KRCB37-1	SkyAir	LCD wired remote controller BRC1C type BRC1D type BRC1E type
	VRV	

1 Selection of Installation Location

- Select a location for installation that meets the conditions below.
  (1) Locations that do not obstruct the opening and closing of the door
  (2) Locations where the box does not obstruct the way
  (3) Locations that are not exposed to direct sunlight

Note

- Choose a surface for mounting that is as flat as possible.

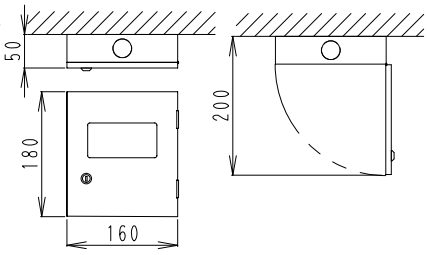

(Door closed) (Door open)

2 Installation of Remote Controller Box

(1) Determine the direction for the wiring to exit the box, and punch out a knockout hole in the remote controller box ①
- There are three possible places for the wire to exit the box: on the top, bottom and back of the box. (See the drawing on the right.)

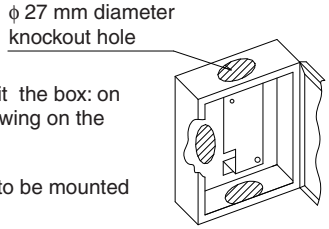

(2) Determine a location for the remote controller box to be mounted where the wire can be exit appropriately.

(3) Mount the remote controller box with four screws (they should be prepared on site).
- Refer to the drawing below for dimensions.

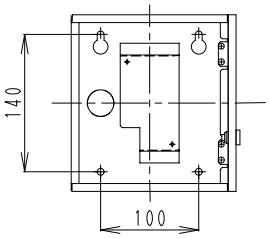

3 Installation of Remote Controller

- When mounting the remote controller, follow the installation manual attached to the indoor unit and the installation manual (installation procedures) attached to the remote controller.

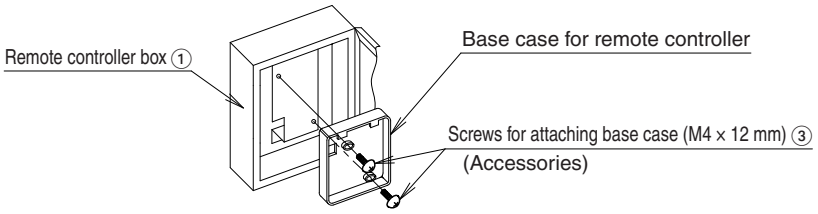

4 Handling Precautions

- Keep the keys in a safe place and hand them to the customer after the installation work is finished.
- Refer to the drawing on the right on how to open and close the door.

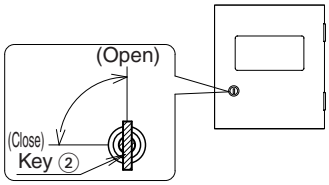

JC: 2PA50647A

15. Residential Central Remote Controller

15.1 DCS303A51

15.1.1 Features

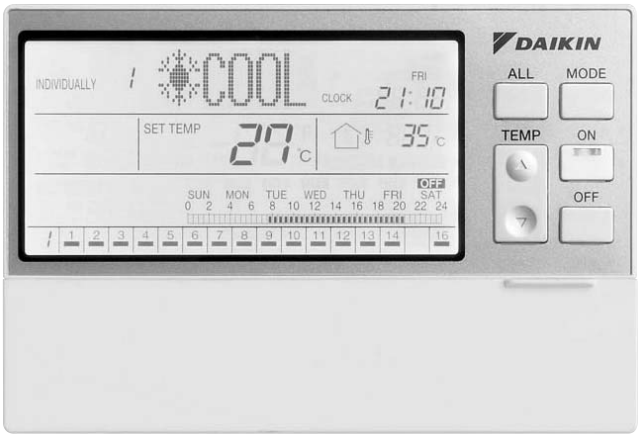

Max. 16 groups of indoor units can be easily controlled with the large LCD panel.

- Max.16 groups (128 indoor units) controllable
- Backlight and large LCD panel for easy readability
- ON/OFF, temperature settings and scheduling can be controlled individually for indoor units.
- All indoor units can be turned on or off at once with “ALL” button.
- Each group has a dedicated button for convenience.
- Outdoor air temperature display

* For residential use only. Cannot be used with other centralized control equipment.

15.1.2 Function

			Residential Central Remote Controller	Schedule Timer	Central Remote Controller
			DCS303A51	DST301BA61	DCS302CA61
Number of Management Groups			16	128	64
Monitoring	Command, State Monitoring	Start/Stop	○	Δ	○
		Operation Mode	○	×	○
		Set Temperature	○	×	○
		Inhibition / Permission by Remote Controller	○	×	○
		Outside Temp.	○	×	×
		Malfunction Monitoring	○	Δ	○
		Air Filter, Element Monitoring	○	×	○
Setting and Control	Individual Control	Start/Stop	○	×	○
		Operation Mode	○	×	○
		Set Temperature	○	×	○
		Inhibition / Permission by Remote Controller	○	×	○
	All Start/Stop		○	○	○
	Schedule Control	Weekly schedule	○	○	×
	Emergency stop in case of fire		○	×	○

○: OK
Δ : There are some restrictions about each function.
× : NG

15.1.3 Specifications

Item / Model			DCS303A51/61/61D
Power Supply			Externally supplied 200~240V AC, 50/60Hz
Installation Method			Use of the optional JIS 3-block wall embedded box (KJB311AA)
Conditions for use	Ambient temperature/ Humidity		0- 40°C, less than 85% RH
Dimensions W×H×D	Panel Size	mm	180 x 122 x 20
Overseas Compatibility Certification	Safety		EN60335-2-40
	EMC(EMI, EMS)		EN50022 (CISPR22 Class-B) EN50024 (CISPR24)
LCD Panel	Size/Backlight color		120.4 mm (W) x 60.5 mm (H)/White light
Input	Buttons		6 buttons on the front panel and 24 buttons in the lid
Communication Line	DIII-NET		1 line of A/C equipment DIII-NET for communication use
Input terminals	Contact		Forced Shutdown input
Clock Accuracy			Within +/- 30 sec./month
Power consumption			Max. 3 W

15.1.4 Dimensions

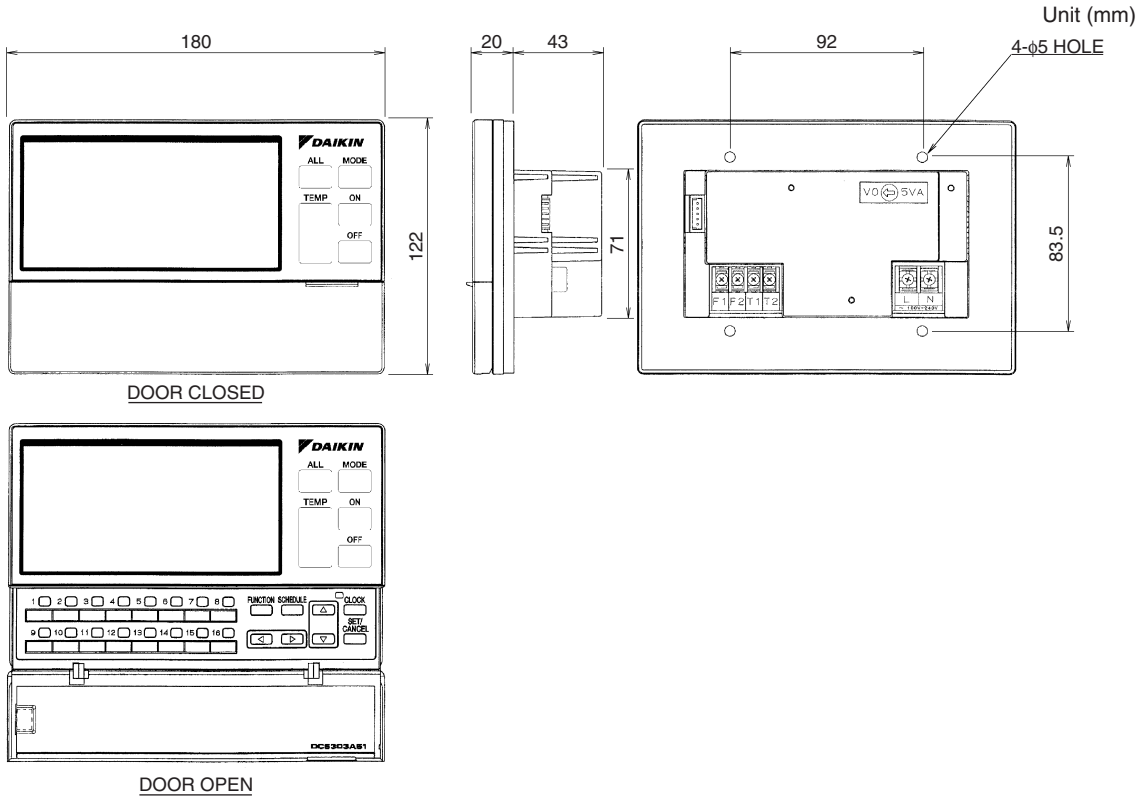

3D059845

15.1.5 System Overview

This central remote controller can monitor and control up to 16 “indoor unit groups”.
By using eight units of this central remote controller, maximum of 128 “indoor unit groups” can be monitored and controlled.

Main Functions

1. Simultaneous ON/OFF control of all indoor units connected to the central remote controller.
2. Setting of operating conditions (such as ON/OFF and set temperature) of indoor units individually by “group”.
3. Monitoring of operating conditions such as operation mode and set temperature.
4. Connection of an external key system, BMS, etc. via Forced OFF input (T1, T2).

■ **When using one central remote controller unit**

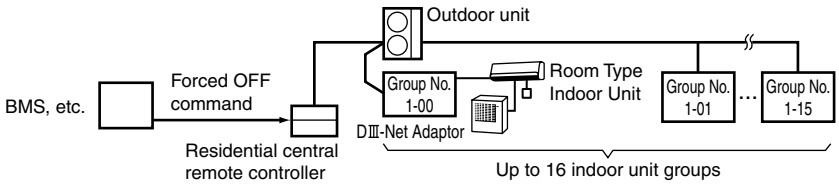

■ **When using eight central remote controller units**

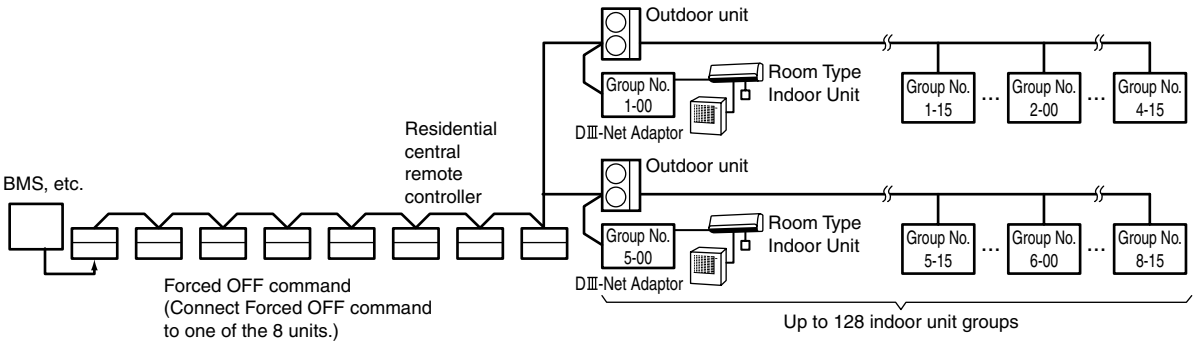

(The central remote controller cannot be used together with the optional remote control adaptor PCB or group remote control adaptor.)

* An “indoor unit group” refers to one of the following:

1. One indoor unit without remote controller

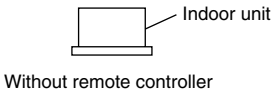

2. One indoor unit controlled by one or two remote controllers

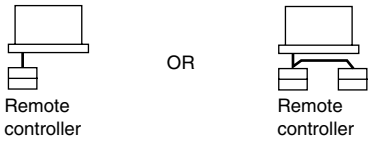

3. Up to 16 indoor units group-controlled by one or two remote controllers

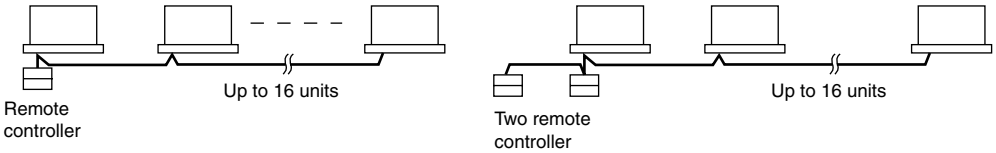

* “Group control” is a setting which enables simultaneous control of multiple indoor units from a single remote controller.

2P219071-1A

15.1.6 Names and Functions of the Operating Section

■ **External View**

(All indications are displayed in the following diagram of screen for the explanation purpose. Actual indications displayed during operation will vary.)

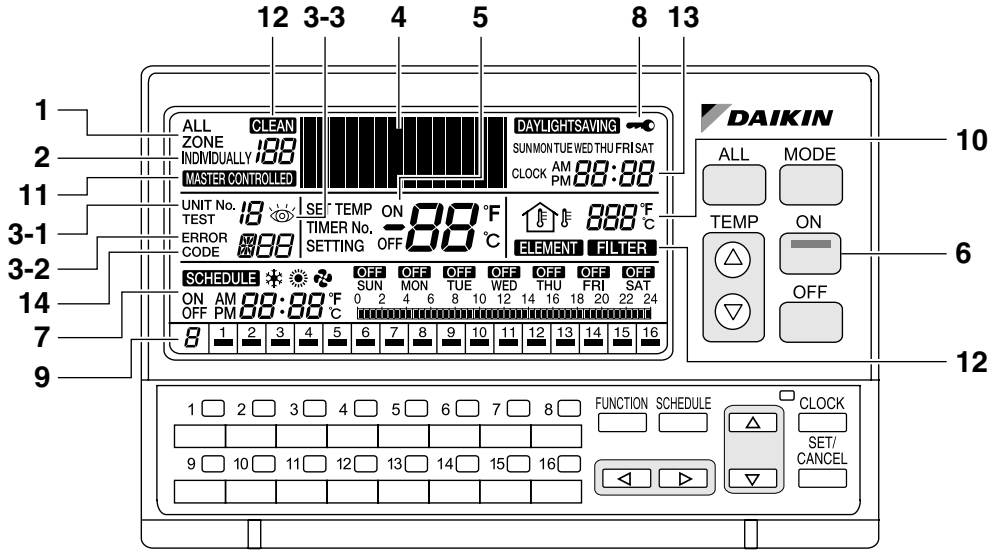

1	**ALL**
	This indicates that the display shows the ALL screen.
2	**INDIVIDUALLY**
	This indicates that the display shows the INDIVIDUALLY screen for the currently selected air conditioner No.
3	**ERROR CODE DISPLAY**
	When an equipment error occurs, the error UNIT No. (**3-1**), ERROR CODE (**3-2**) and (**3-3**) indications blink.
4	**OPERATION MODE DISPLAY (Dot Matrix)**
	This section displays the operation status.
5	**SET TEMP DISPLAY**
	This section displays the set temperature.
6	**ON LAMP**
	This lamp lights when one or more indoor units under control are operating.
7	**SCHEDULE SETTING DISPLAY**
	This section displays the programmed operation details.
8	**KEY LOCK DISPLAY**
	This symbol appears when the key lock has been activated.
9	**OPERATION MONITOR**
	Each box shows the No. of connected air conditioner (group) and its operation status.
10	**OUTDOOR TEMP DISPLAY**
	In the ALL screen, this displays the outside temperature detected by the outdoor unit connected to the air conditioner (group) with a cooling/heating selection privilege(*) that has the smallest unit No. In the INDIVIDUALLY screen, this displays the outside temperature detected by the outdoor unit connected to the selected air conditioner (group). If Heat Reclaim Ventilator is selected, outdoor temperature is not displayed. (*An air conditioner (group) with a cooling/heating selection privilege is a unit which allows switching of the operation mode between cooling and heating.)
11	**MASTER-CONTROLLED DISPLAY**
	This indication appears when the selected air conditioner (group) does not have a cooling/heating selection privilege.
12	**CLEAN SIGN**
	The FILTER and ELEMENT indications appear when the filter and element need to be cleaned.
13	**CLOCK DISPLAY**
	This shows the current time.
14	**OPERATION CODE DISPLAY**
	This displays the operation code (prohibit remote controller, central control priority, last button priority, etc.) during the setting of operation details.

C: 3P124623-10N

15.1.7 Names and Functions of the Operating Section

■ **Names of Operation Buttons**

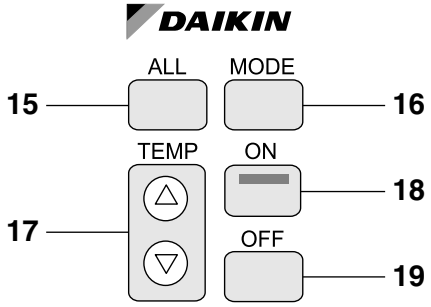

15	**ALL BUTTON**
	Changes the display to the ALL screen.
16	**MODE BUTTON**
	Used to select the operation mode.
17	**TEMP BUTTONS**
	Used to set the temperature.
18	**ON BUTTON**
	Turns on all indoor units or individual unit (group).
19	**OFF BUTTON**
	Stops all indoor units or individual unit (group).

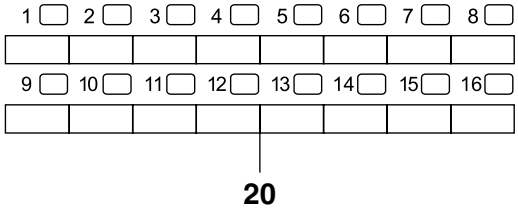

20	**INDIVIDUAL UNIT (GROUP) SELECTION BUTTONS**
	Changes the display to the INDIVIDUALLY screen for monitoring or setting the air conditioner (group) of the indicated No.

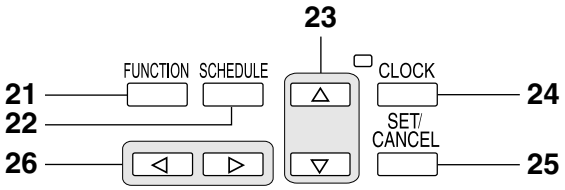

21	**FUNCTION BUTTON**
	Changes the display to the Function Menu setting screen.
22	**SCHEDULE BUTTON**
	Changes the display to the SCHEDULE setting screen.
23	**△▽ BUTTONS**
	Used to select a menu.
24	**CLOCK BUTTON**
	Changes the display to the current time setting screen.
25	**SET/CANCEL BUTTON**
	Enters or cancels settings.
26	**◁▷ BUTTONS**
	Used to set an operation schedule or current time.

3P124623-10N

15.1.8 Installation Manual

(1) Open the upper part of remote controller.
Insert a ⊖ screwdriver (3 locations) into the recess between the upper part and the lower part of remote controller and twist the screwdriver lightly.

PCB is attached with both the upper and lower part of remote controller. Do not damage the board with the screwdriver.

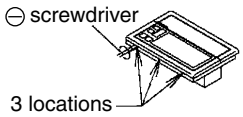

(2) Open the upper part of remote controller and install the electric parts box (field supply) with the attached installation screws (M4 × 16).

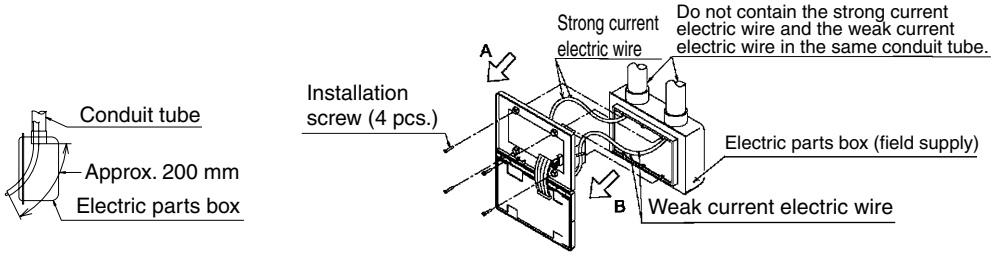

Note
Suitable length of the electric wire is about 200 mm (from electric parts box).

(3) Please refer to A-direction view and B-direction view to configure and fix wires for strong current and weak current respectively.

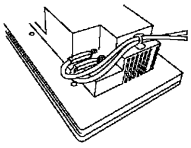
A direction view

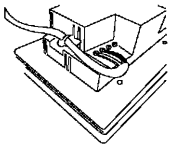
B direction view

2P219071-1A

■ **Initial Setting**

Settings (1) and (2) are initialized when power is turned ON, therefore complete settings BEFORE activating the power.

(1) Connector for setting master controller (X1A) (Provided with connector at factory setting)

- When using only 1 central remote controller, do not disconnect the connector for setting master controller. (Use the unit with the connector in the state in which it was delivered.)
- When using multiple central remote controllers, make settings as indicated in the below table. It is not allowed to be used along with other centralized control equipment.

	Connector for setting master controller (X1A)
1 to 16 units	Set 1 to “Used” and all the rest to “Not used”.

(2) MAIN/SUB changeover switch setting

With 2 central remote controllers, centralized control (indoor units) is possible from different locations. In this kind of set-up, it is necessary to set the MAIN/SUB changeover switch.

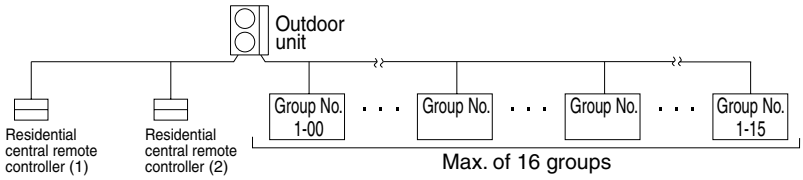

One of the 2 central remote controllers (1) to (2) is set to “MAIN” while the other is set to “SUB”.

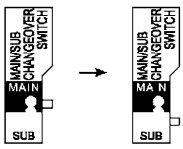

(Factory setting)

Note

- When using 1 central remote controller, it is necessary to set to “MAIN”.
- Be sure to set before turning the power ON.

(3) Setting of the sequential operation function

The central remote controller is equipped with a sequential operation function that sequentially turns indoor units on in about 2-second intervals during unified operation. (Sequential operation is factory set to “ON”.)

To switch sequential operation ON or OFF, set as follows:

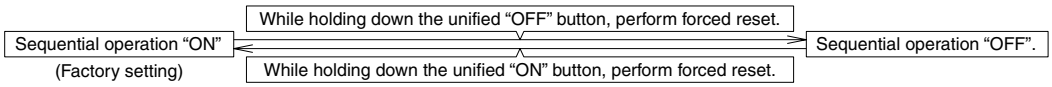

Note

The sequential operation function is designed to reduce the load on the power supply equipment, but does not guarantee that compressors will not be started simultaneously.

You cannot therefore count on a capacity reduction effect by power supply equipment breaker selection.

(4) Forced reset switch

When changing the setting of the connector for setting master controller, you can reset simply by setting it to the reset side once and returning to the normal side, without turning the power OFF.

(For normal operation, set the switch to the normal side.)

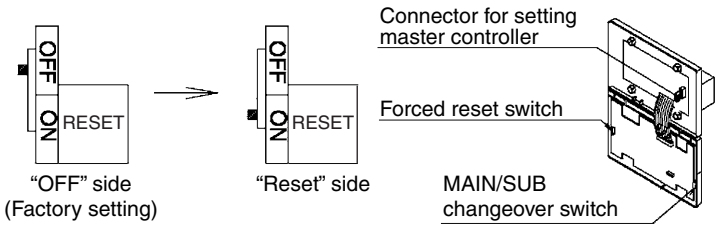

2P219071-1A

■ Electric Wiring

WIRING OUTLINE

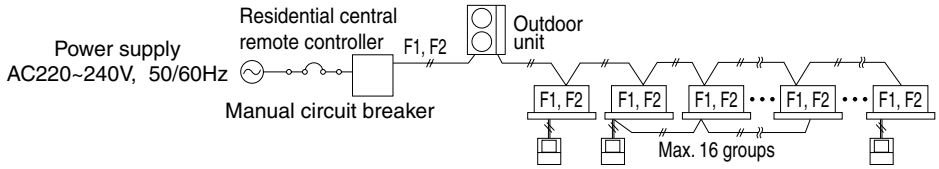

WIRING TO THE INDOOR UNIT AND OUTDOOR UNIT

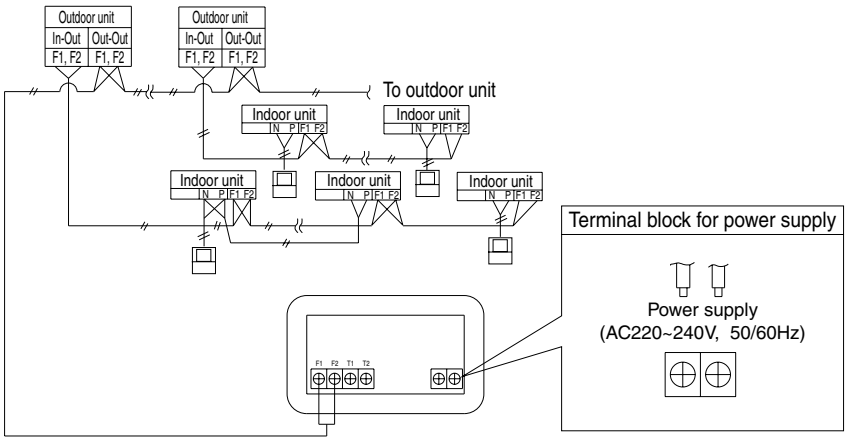

Wiring specifications

Power supply wiring	2mm²
Transmission wiring for control	0.75 - 1.25 mm² sheathed vinyl cord or cable (balanced type) - maximum length 1000 m (total overall wiring length 2000 m)
Manual circuit breaker	15 A or 10 A

Check the wiring of the indoor units to the outdoor units and between all power, indoor units, and remote controllers. See the installation manual included with the indoor and outdoor units for details.

CONTROL TERMINAL BLOCK

∗1 For connecting indoor unit (F1, F2)
∗2 Forced OFF input (T1, T2)
When the Forced OFF input (T1, T2) is “ON”, all indoor units connected will stop running.
Use only contactors which guarantee the minimum applicable load DC16 V, 10 mA.

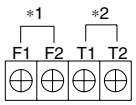

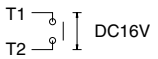

Note:
Use instantaneous contactor of over 200 msec energizing time, when necessary.

Wire Forced OFF input only when necessary.

Note

Do not connect the power supply wiring (AC220 V, 50 Hz) to the control terminal block. If connected by mistake, it may damage or burn electrical parts of central remote controller and indoor unit. It may result in serious damage. Be sure to check wirings before turning the power ON.

2P219071-1A

■ **Setting Language and Group No. for Centralized Control (When the Power Supply is Turned On)**

The initial language for the central remote controller is “ENGLISH”.
The initial value of centralized the group No. for the central remote controller is “1”.
(the controlling scope of centralized Group No.: 1-00~1-15)

Please set in accordance with the items specified here below while switching the initial language and initial values of the centralized group No. from “1”.

(1) Turn ON the power of the indoor unit and central remote controller. (Unless the power is ON, no setting can be made.)
  * Check that the installation and electrical wiring are correct before turning the power supply ON again.

(2) When the power supply is turned ON, all LCD will be displayed once, and switch to language setting mode.
  Select language with ◁ or ▷ button and set language with “SET/CANCEL” button.
  (↔ ENGLISH ↔ FRENCH ↔ GERMAN ↔ ITALIAN ↔ SPANISH ↔ PORTUGUESE ↔)
  After “SET CANCEL” button is pressed, “88” will appear in about 1 minute.

(3) When the “88” appears, hold down the “MODE” button and the single air conditioner selecting button “16” for a minimum of 4 seconds.

(4) When the “88” disappears, switch to Centralized Group No. Setting mode.
  The centralized group No. setting appears, and the display of centralized group No. at the left below switches from light-on to light-off.

(5) Select the centralized group No. through buttons “1” to “8” of single air conditioner, and the selected No. will be displayed at left below (refer to Table 1).
  The operation will be null in the case the buttons “9” to “16” are hold downed, and the centralized group No. displayed on the left of operation monitoring side will not be changed.

(6) Press the “OFF” button to determine the group No.
  The display of the group No. at the left below will be switched from flash to light. After the set operation is completed, the “88” will appear on the central part.
  * Please make sure that the “OFF” button has been hold downed. If the set of Group is uncertain, it will not be ended.

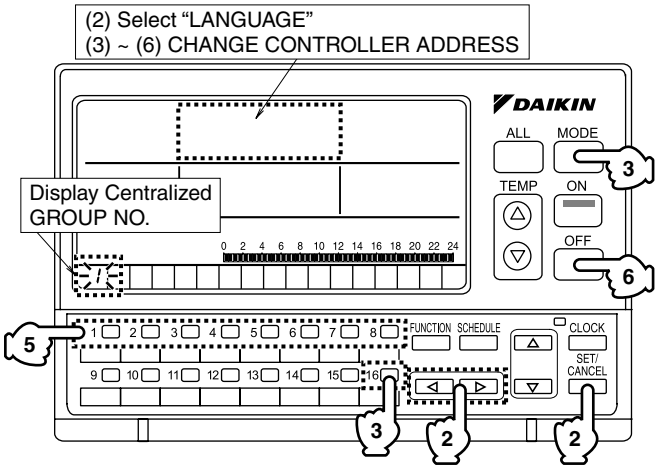

Table 1

Group No. for centralized control	Control range
1	1-00~1-15
2	2-00~2-15
3	3-00~3-15
4	4-00~4-15
5	5-00~5-15
6	6-00~6-15
7	7-00~7-15
8	8-00~8-15

■ **Setting the Group No.**

Set the group No. of indoor units by remote controller. (In the case that the remote control is absent, the group No. shall also be set by connecting to a remote controller, which shall be removed after the set operation.)

(1) Turn ON the power of the indoor unit and central remote controller.
(Unless the power is ON, no setting can be made.)
Check that the installation and electrical wiring are correct before turning the power supply ON again.
(When the power supply is turned ON, all LCD appear once. Then, the unit may not accept the operation for about 1 minute with the display of "88".)

(2) Enter into set mode
Hold down the "TEST" button for a minimum of 4 seconds and the remote controller will enter into Field set mode.

(3) Select mode No.
Press "▲▼" up and down button to select mode No. "00".

(4) Select the group No.
Press "▲▼" up and down button to select the group No.
(Group No. increase in the order of 1-00, 1-01, ...1-15, 2-00, ...8-15.)
Please refer to Table 2 for the relation between the centralized group No. of remote controller and central remote controller.

(5) Setting the group No.
Press the "▭/⁄⁄" button to select the group No. for each group.

(6) Return to normal mode.
Press "TEST" button.

NOTES

■ For simplified remote controller, see the installation table.

■ See the manuals which came with all the heat exchangers and each adaptor (i.e., multi-purpose adaptors) for details on their Group No. settings.

NOTICE

Enter the group No. and installation place of the indoor unit into the installation table in the operation manual. Be sure to store the installation manual along with the operation manual for maintenance.

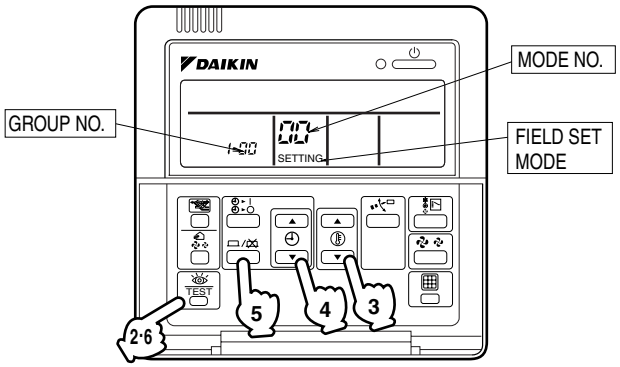

Table 2 Cross Reference List for Centralized Group No. of Remote Controller and Central Remote Controller

Display of the remote controller of air conditioner	Display of the centralized Group No. of central remote controller	Display of the remote controller of air conditioner	Display of the centralized Group No. of central remote controller
1-00	1	1-08	9
1-01	2	1-09	10
1-02	3	1-10	11
1-03	4	1-11	12
1-04	5	1-12	13
1-05	6	1-13	14
1-06	7	1-14	15
1-07	8	1-15	16

*In the case that the Group No. is "2" to "8", please replace the part "1-" of Table 2.

■ **Test Operation**

Before starting test operation, check that the power is supplied to the indoor and outdoor units, and central remote controller.
Press “ON” button on the remote controller within 10 seconds after entering into the test operation mode.
Operate the unit for 30 minutes.
Press “OFF” button to stop operating. If the operation lamp flashes, it indicates a malfunction.
Call the group of flashing display, confirm malfunction code, and check the source of malfunction.
(The operation manual lists all error codes, so refer to it.)

NOTICE

- For test operation, refer to the installation manual of the outdoor unit.
- After turning the power supply ON, if the unit does not accept operation for 2 minutes or more with the display of “88”, check the following points.
  - Check that setting of the connector for setting master controller is correct.
  - Check that the group No. for centralized control has been set.

2P219071-1A

16. Central Remote Controller

16.1 DCS302CA61

64 groups (zones) of indoor units can be controlled individually same as LCD Remote controller.

- Max.64 groups (128 indoor units controllable)
- Max. 128 groups (128 indoor units) are controllable by using 2 central remote controllers, which can control from 2 different places.
- Zone control
- Error code display
- Combination with Unified ON/OFF controller, schedule timer and BMS system
- Airflow rate and direction can be controlled individually for indoor units in each group operation.
- Ventilation volume and mode can be controlled for Heat Reclaim Ventilator.
- Up to 4 Operation/Stop pairs can be set per day by connecting a schedule timer.

16.1.1 Specifications

Item / Model		DCS302CA61
Power supply voltage / frequency		AC100~240V ±10% 50/60Hz
Power consumption		Max. 8W
Setting data backup		Non-volatile memory (Data preserved semi-permanently)
Effects of instantaneous power failure		No effect for 20 milli-sec. or less
Forced OFF input Operation on the local side cannot be carried out during forced OFF input.		■ No-voltage normal open contact ■ Micro-current contact capable of handling 16VDC and approx. 10mA. ■ Max. 150 m cable length
Power supply for schedule timer		Power can be supplied to schedule timer. (Max. 1 unit)
Operating ambient temperature /humidity condition		-5~40°C, 95% RH or less (no condensation)
Size (width × height × depth)	mm	180×120×64.5 exposed portion of front panel : 16
Mass	g	Approx. 420

16.1.2 Dimensions

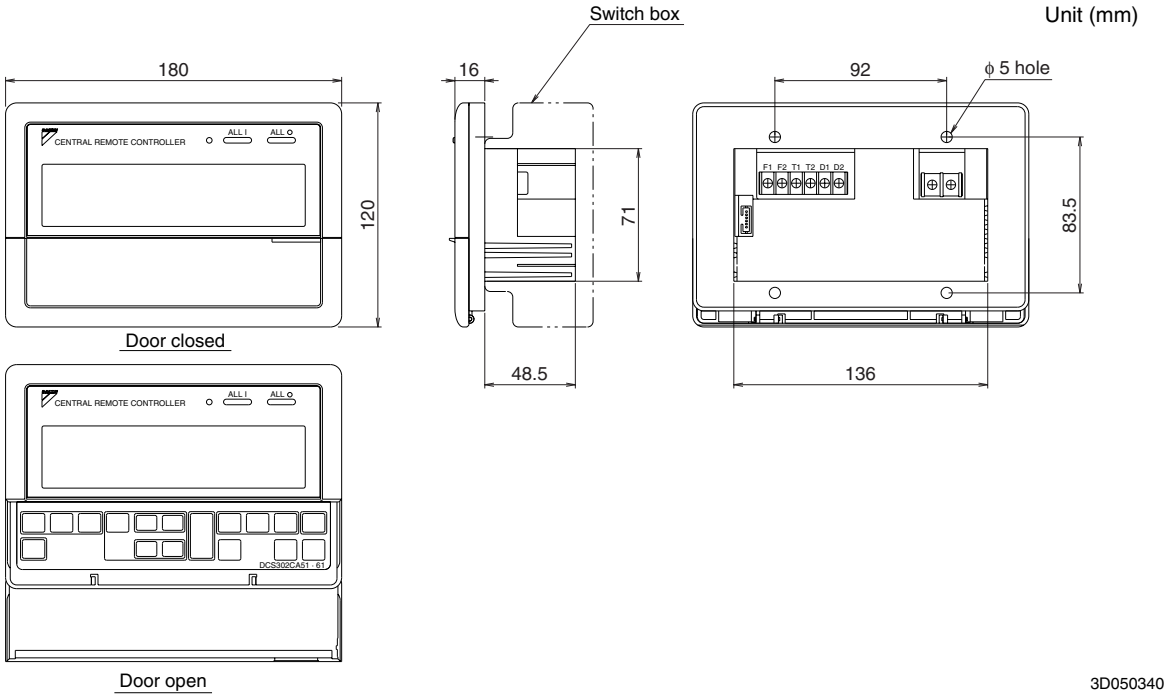

16.1.3 Operation Manual

BEFORE USE

■ GENERAL DESCRIPTION OF SYSTEM

This central remote controller can monitor and control up to 64 indoor unit groups.
Using two central remote controllers allows monitoring and controlling of up to 128 indoor unit groups.

Main Functions

1. Batch starting and stopping of indoor units connected to the central remote controller.
2. Handling of operation settings such as start/stop, timer operation, remote controller prohibition/permission, etc., and operation status settings such as temperature.
3. Operation status monitoring of operation mode, set temperature, etc.
4. Can be connected to an external central monitor panel and key system using the forced stop input (non-voltage a connector).

- When using 1 central remote controller

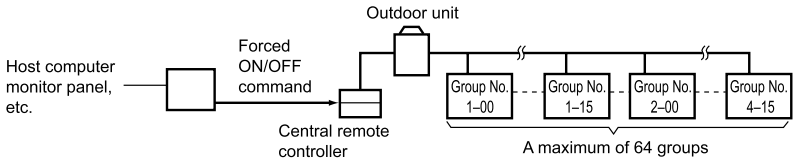

- When using 2 central remote controllers

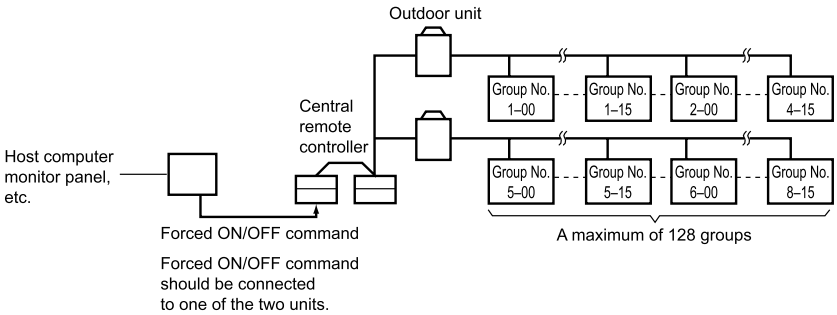

(The central remote controller and the separately sold remote control adaptor circuit board or group remote control adaptor cannot be used together.)

∗ GROUP OF INDOOR UNIT refers to the below.

1. A single indoor unit without remote controller

1. A single indoor unit without remote controller

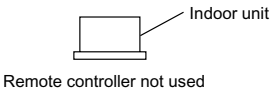

2. A single indoor unit controlled by one or two remote controllers

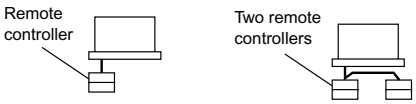

3. Maximum of 16 indoor units, group-controlled by one or two remote controllers

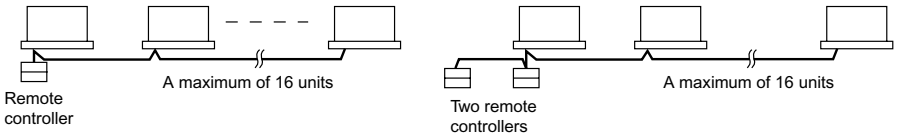

3P124623-8D

∗ Zone control from the central remote controller
Zone control is available from the central remote controller. With it, it is possible to make unified settings for multiple groups, so setting operations are greatly simplified.

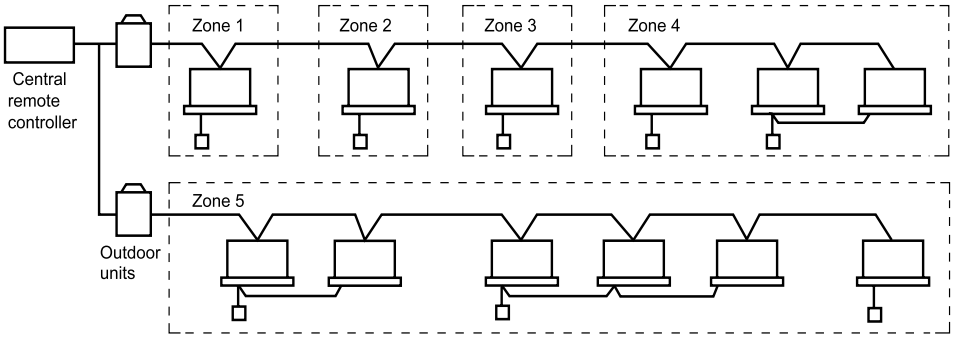

- Any setting you make within a given zone will apply to all groups in the said zone.
- A maximum of 64 zones can be set from a single central remote controller. (Each zone contains a maximum of 64 groups.)
- Zones can be set randomly from the central remote controller.

SAFETY CONSIDERATIONS

Please read these "SAFETY CONSIDERATIONS" carefully before installing air conditioning equipment and be sure to install it correctly.
After completing the installation, make sure that the unit operates properly during the start-up operation.
Please instruct the customer on how to operate the unit and keep it maintained.
Also, inform customers that they should store this installation manual along with the operation manual for future reference.
This air conditioner comes under the term "appliances not accessible to the general public".

Meaning of warning, caution and note symbols.

⚠ **WARNING** .... Indicates a potentially hazardous situation which, if not avoided, could result in death or serious injury.

⚠ **CAUTION** .... Indicates a potentially hazardous situation which, if not avoided, may result in minor or moderate injury. It may also be used to alert against unsafe practices.

⚠ **NOTE**..... Indicates situation that may result in equipment or property-damage-only accidents.

Keep these warning sheets handy so that you can refer to them if needed.
Also, if this equipment is transferred to a new user, make sure to hand over this operation manual to the new user.

⚠ **WARNING**

In order to avoid electric shock, fire or injury, or if you detect any abnormality such as smell of fire, turn off power and call your dealer for instructions.

Ask your dealer for installation of the air conditioner.
Incomplete installation performed by yourself may result in a water leakage, electric shock, and fire.

Ask your dealer for improvement, repair, and maintenance.
Incomplete improvement, repair, and maintenance may result in a water leakage, electric shock, and fire.

Improper installation or attachment of equipment or accessories could result in electric shock, short-circuit, leaks, fire or other damage to the equipment. Be sure only to use accessories made by Daikin which are specifically designed for use with the equipment and have them installed by a professional.

Ask your dealer to move and reinstall the air conditioner or the remote controller.
Incomplete installation may result in a water leakage, electric shock, and fire.

Never let the indoor unit or the remote controller get wet.
It may cause an electric shock or a fire.

Never use flammable spray such as hair spray, lacquer or paint near the unit.
It may cause a fire.

Never replace a fuse with that of wrong ampere ratings or other wires when a fuse blows out.
Use of wire or copper wire may cause the unit to break down or cause a fire.

Never inspect or service the unit by yourself.
Ask a qualified service person to perform this work.

Cut off all electric waves before maintenance.

Do not wash the air conditioner or the remote controller with excessive water.
Electric shock or fire may result.

Do not install the air conditioner or the remote controller at any place where flammable gas may leak out.
If the gas leaks out and stays around the air conditioner, a fire may break out.

Do not touch the switch with wet fingers.
Touching a switch with wet fingers can cause electric shock.

CISPR 22 Class A Warning:
This is a class A product. In a domestic environment this product may cause radio interference in which case the user may be required to take adequate measures.

3P124623-8D

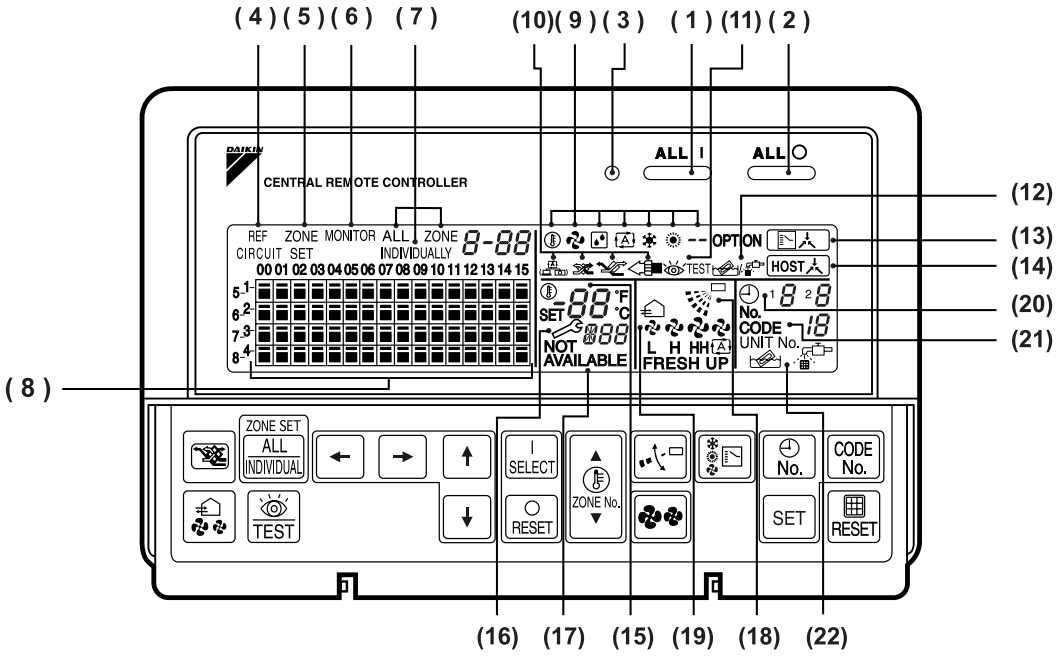

Fig. 1

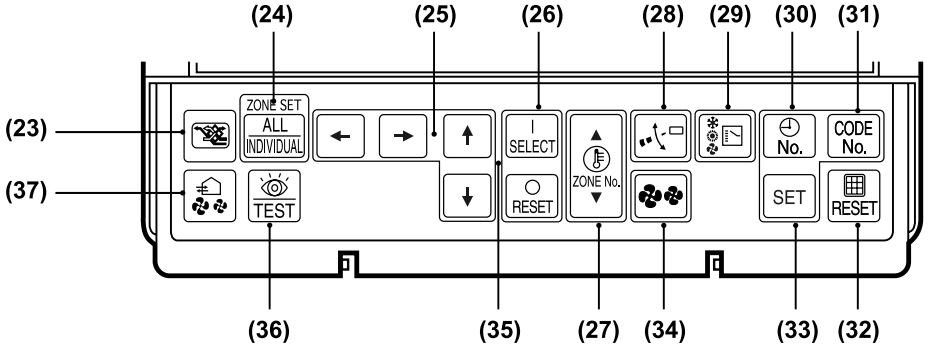

Fig. 2

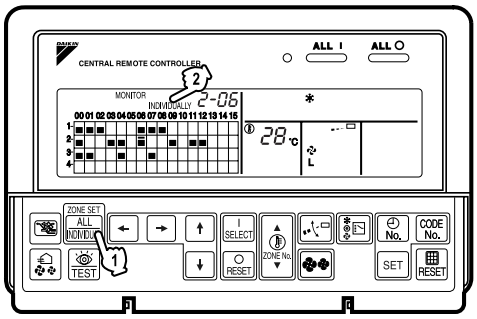

Fig. 3

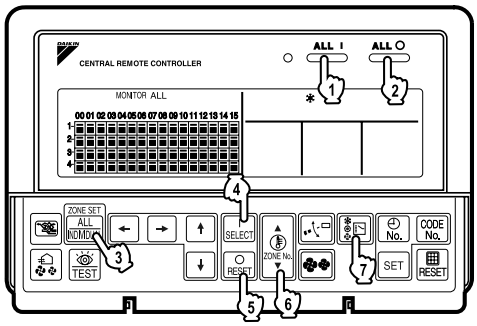

Fig. 4

3P124623-8D

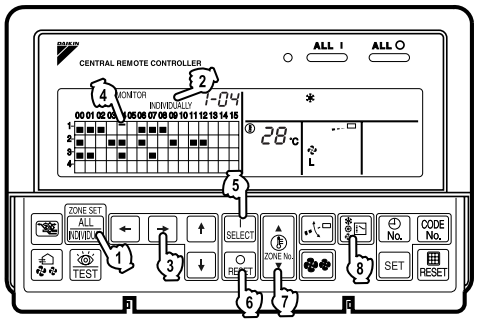

Fig. 5

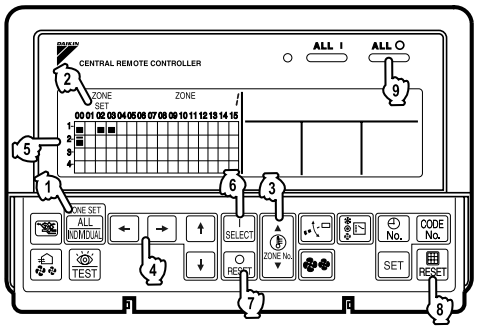

Fig. 6

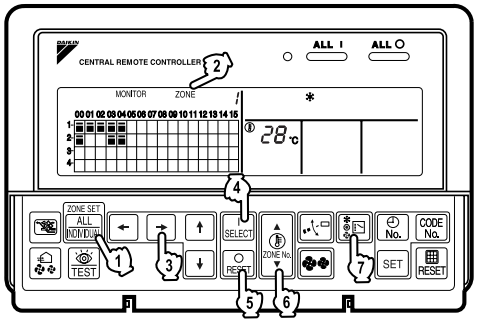

Fig. 7

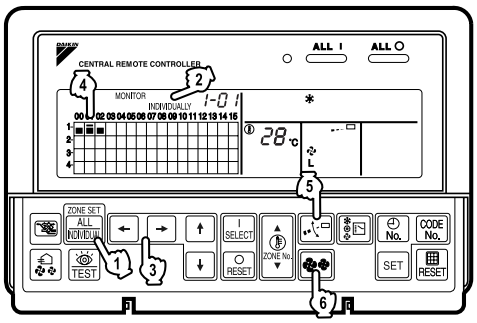

Fig. 8

CAUTION

After a long use, check the unit stand and fitting for damage.
If they are left in a damaged condition, the unit may fall and result in injury.

Do not allow a child to mount on the unit or avoid placing any object on it.
Falling or tumbling may result in injury.

Do not let children play on and around the unit.
If they touch the unit carelessly, it may result in injury.

Do not place a flower vase and anything containing water.
Water may enter the unit, causing an electric shock or fire.

Never touch the internal parts of the controller.
Do not remove the front panel. Some parts inside are dangerous to touch, and a machine trouble may happen.
For checking and adjusting the internal parts, contact your dealer.

Avoid placing the controller in a spot splashed with water.
Water coming inside the machine may cause an electric leak or may damage the internal electronic parts.

Do not operate the air conditioner when using a room fumigation - type insecticide.
Failure to observe could cause the chemicals to become deposited in the unit, which could endanger the health of those who are hypersensitive to chemicals.

Safely dispose of the packing materials.
Packing materials, such as nails and other metal or wooden parts, may cause stabs or other injuries.
Tear apart and throw away plastic packaging bags so that children will not play with them. If children play with a plastic bag which was not torn apart, they face the risk of suffocation.

Do not turn off the power immediately after stopping operation.
Always wait at least five minutes before turning off the power. Otherwise, water leakage and trouble may occur.

The appliance is not intended for use by young children or infirm persons without supervision.

The remote controller should be installed in such a way that children cannot play with it.

NOTE

Never press the button of the remote controller with a hard, pointed object.
The remote controller may be damaged.

Never pull or twist the electric wire of the remote controller.
It may cause the unit to malfunction.

Do not place the controller exposed to direct sunlight.
The LCD display may get discolored, failing to display the data.

Do not wipe the controller operation panel with benzine, thinner, chemical dustcloth, etc.
The panel may get discolored or the coating peeled off. If it is heavily dirty, soak a cloth in water-diluted neutral detergent, squeeze it well and wipe the panel clean. And wipe it with another dry cloth.

Dismantling of the unit, treatment of the refrigerant, oil and eventual other parts, should be done in accordance with the relevant local and national regulations.

CONTENTS

BEFORE USE 1
GENERAL DESCRIPTION OF SYSTEM 1
SAFETY CONSIDERATIONS 2
FEATURES AND FUNCTIONS 6
NAMES AND FUNCTIONS OF THE OPERATING SECTION 7
OPERATION 8
Individual screen, all screen, zone screen 8
Batch operation and stop method 9
Group operation and stop method 9
Registering zones 9
Zone operation and stop method 10
Changing the fan direction and fan strength 11
Changing the ventilation mode and ventilation strength 11
Timer Number Setting 11
Setting the Operation Code 12
OPERATION MODE 13
Setting operation mode 16
Group monitoring 16
Error diagnosing function 17
Setting master remote controller 20
Display of time to clean 21
INSTALLATION TABLE 22
OPTIONAL ACCESSORIES 23
DOUBLE CENTRAL REMOTE CONTROLLERS 23
SPECIFICATIONS 24
Specifications 24
Outline drawings 24

Fig. 1, 2, 3, 4 3
Fig. 5, 6, 7, 8 4
Fig. 9, 10, 11, 12 25
Fig. 13, 14, 15, 16 26

3P124623-8D

FEATURES AND FUNCTIONS

■ **Operation menu**
This central remote controller can operate and stop machines by either group or zone.
Batch operation and batch stop functions are also available. When used in combination with the schedule timer (optional accessory), timer operation and stop functions are available.

See page 8—12.

■ **Various operation modes.**
You can operate the system from both this unit and the remote controller, so to enable various operation control patterns. Twenty different operation modes are available including five operation patterns:

1. Start/stop: remote controller prohibition, remote controller stop-only permission, central priority, after-press priority, remote controller permission timer
2. Operation modes: remote controller prohibition, remote controller permission
3. Set temperature: remote controller prohibition, remote controller permission

See page 13—15.

■ **Zone control for simpler setting procedures**
You can control a maximum of 64 groups of indoor units by using this central remote controller. You don't have to repeat the same setting operations by group because you can make each of the following settings by zone.
A functions is available for setting all groups in one batch.

- Operation mode
- Control mode
- Setting temperature
- Programming time No. (Used in conjunction with the schedule timer)

See page 8—16.

■ **Monitoring all indoor unit information**
The following information can be displayed by group.

- Operation information such as operation mode, set temperature, etc., for indoor units
- Maintenance information such as cleaning signs for filters or elements
- Error codes and other malfunction diagnosis information

See page 16—21.

■ **Function of refrigerant system display**
This display helps you understand, at a glance, the indoor units sharing the same outdoor unit and the particular indoor unit among them that is set as the master remote controller.

See page 20.

- Room air conditioners and multi-purpose air conditioners may also be connected by using separately-sold adaptor boards.
  This may limit functionality, so consult the manuals that come with each adaptor board.

3P124623-8D

NAMES AND FUNCTIONS OF THE OPERATING SECTION (Fig. 1, 2)

1	**UNIFIED OPERATION BUTTON**
	Press to operate all indoor units.
2	**UNIFIED STOP BUTTON**
	Press to stop all indoor units.
3	**OPERATION LAMP (RED)**
	Lit white any of the indoor units under control is in operation.
4	**“ REF CIRCUIT ” DISPLAY (REFRIGERANT SYSTEM DISPLAY)**
	This indication in the square is lit while the refrigerant system is being displayed.
5	**“ ZONE SET ” DISPLAY (ZONE SETTING)**
	The lamp is lit while setting zones.
6	**“ MONITOR ” DISPLAY (OPERATION MONITOR)**
	The lamp is lit while operation is being monitored.
7	**“ ALL ” “ ZONE ” “ INDIVIDUALLY ” DISPLAY**
	The status displays indicates either batch functions or which zone or individual unit (or group) are being used.
8	**OPERATION MONITOR**
	Each square displays the state corresponding to each group.
9	**“ ” “ ” “ ” “ ” “ ” “ ” “ – – ” DISPLAY (OPERATION MODE)**
	Displays operating state.
10	**“ ” “ ” “ ” “ ” DISPLAY (VENTILATION CLEANING DISPLAY)**
	This is displayed when a Ventiair total enthalpy heat exchanger unit or other such unit is connected.
11	**“ TEST ” DISPLAY (INSPECTION/TEST)**
	Pressing the maintenance/test run button (for service) displays this. This button should not normally be used.
12	**“ / ” DISPLAY (TIME TO CLEAN)**
	It lights up when any individual unit (group) has reached the time for the filter or element to be cleaned.
13	**“ ” DISPLAY (COOLING/HEATING SELECTION PRIVILEGE NOT SHOWN)**
	For zones or individual units (groups) for which this is displayed, cooling and heating cannot be selected.
14	**“ HOST ” DISPLAY (UNDER HOST COMPUTER INTEGRATED CON-TROL)**
	While this display is lit up, no settings can be made. It lights up when the upper central machines are present on the same air conditioning network.
15	**“ SET 88 °C ” DISPLAY (PRESET TEMPERATURE)**
	Displays the preset temperature.
16	**“ U4 ” DISPLAY (MALFUNCTION CODE)**
	This displays (flashes) the content of errors when an error failure has occurred. In maintenance mode, it displays the latest error content.
17	**“NOT AVAILABLE” DISPLAY (NO FUNCTION DISPLAY)**
	If a function is not available in the indoor unit even if the button is pressed, “NOT AVAILABLE” is may be displayed for a few seconds.
18	**“ ” DISPLAY (FAN DIRECTION SWING DISPLAY)**
	This displays whether the fan direction is fixed or set to swing.
19	**“ ” “ L ” “ H ” “ HH ” “ ” “FRESH UP” DISPLAY (VENTILATION STRENGTH/SET FAN STRENGTH DISPLAY)**
	This displays the set fan strength.
20	**“ No. ” DISPLAY (TIME NO.)**
	Displays the operation timer No. when used in conjunction with the schedule timer.

21	**“ CODE UNIT No. 18 ” DISPLAY (OPERATION CODE AND UNIT NUMBER DISPLAY)**
	The method of operation (remote controller prohibited, central operation priority after-press operation priority, etc.) is displayed by the corresponding code. This displays the numbers of any indoor units which have stopped due to an error.
22	**“ ” “ ” DISPLAY (TIME TO CLEAN AIR CLEANER ELEMENT/ TIME TO CLEAN AIR FILTER)**
	Displayed to notify the user it is time to clean the air filter or air cleaner element of the group displayed.
23	**VENTILATION MODE BUTTON**
	This is pressed to switch the ventilation mode of the total enthalpy heat exchanger.
24	**ALL/INDIVIDUAL BUTTON**
	Pressing this button scrolls through the “all screen”, “zone screen”, and “individual screen”.
25	**ARROW KEY BUTTON**
	This button is pressed when calling an individual indoor unit or a zone.
26	**ON/OFF BUTTON**
	Starts and stops ALL, ZONE, and INDIVIDUAL units.
27	**TEMPERATURE ADJUSTMENT BUTTON (ZONE NUMBER BUTTON)**
	This button is pressed when setting the temperature. Select the zone number if any zones have been registered.
28	**FAN DIRECTION ADJUSTMENT BUTTON**
	This button is pressed when setting the fan direction to “fixed” or “swing”.
29	**OPERATION MODE SELECTOR BUTTON**
	This sets the operation mode. The dry setting cannot be done.
30	**TIME NO. BUTTON**
	Selects time No. (Use in conjunction with the schedule timer only).
31	**CONTROL MODE BUTTON**
	Selects control mode.
32	**FILTER SIGN RESET BUTTON**
	This button is pressed to erase the “clean filter” display after cleaning or replacement.

33	**SET BUTTON**
	Sets control mode and time No.
34	**FAN STRENGTH ADJUSTMENT BUTTON**
	Pressing this button scrolls through “weak”, “strong”, and “fast”.
35	**ZONE SETTING BUTTON**
	Zone registration mode can be turned on and off by pressing the start and stop buttons simultaneously for at least four seconds.
36	**INSPECTION/TEST RUN BUTTON (FOR SERVICE)**
	Pressing this button scrolls through “inspection”, “test run”, and “system display”. This button is not normally used.
37	**VENTILATION STRENGTH ADJUSTMENT BUTTON**
	This button is pressed to switch the ventilation strength (“fresh up”) of the total enthalpy heat exchanger.

(Notes)
1. Please note that all the displays in the figure appear for explanation purposes or when the cover is open.
2. If the unit is used in conjunction with other optional central controllers, the OPERATION LAMP of the unit that is not under operation control may light up and go out a few minutes behind schedule. This shows that the signal is being exchanged, and does not indicate any failure.

OPERATION

■ Individual screen, all screen, zone screen (Fig. 3)

This controller can perform operations in the individual screen, all screen, or zone screen.

- Individual screen — The individual screen is used when performing group operations.
- All screen — The all screen is used when performing operations for all units at once.
- Zone screen — The zone screen is used when performing zone operations.

1. ① Select the screen by pressing the “ALL/INDIVIDUAL” button.

② Every time the “ALL/INDIVIDUAL” button is pressed, the selection scrolls through INDIVIDUAL → ALL → ZONE.
If nothing is done in the all or zone screens for one minute, it automatically goes to the individual screen.

- If the zone number in the zone screen is displayed as "---," this indicates that no units are registered in a zone.
  Please perform zone registration before proceeding in the zone screen. (See page 9)

■ Batch operation and stop method (Fig. 4)

This is for operating or stopping all connected units at once.

A. What to do when operating or stopping all connected units at once.

1. Press either ☞ " ALL I " or ☞ " ALL ○ ".

- Operation can be performed from the individual screen, the all screen, or the zone screen.
- The "TEMPERATURE ADJUSTMENT" and "OPERATION MODE SELECTOR" buttons cannot be used.
  To set the temperature and operation mode, use B. batch operation.

B. Batch Operation

1. ☞ Press the "ALL/INDIVIDUAL button" to enter the all screen.

The " ▬ " display lights up on all registered units.

2. ☞ Press the "SELECT" button.

The " ■ " display lights up on all connected units.

☞ Press the "RESET" button.

The " ■ " display goes off on all connected units.

Operation and stop in the batch screen are done the same as with the batch operation and batch stop buttons.

3. ☞ Press the "TEMPERATURE ADJUSTMENT" button.

The temperature rises 1° every time the (▲) button is pressed.
The temperature drops 1° every time the (▼) button is pressed.

Set to " -- " when you do not wish to use batch setting for the temperature setting.
Setting to 1° above or below the temperature setting range displays " -- ".

4. ☞ Call up the desired mode by pressing the "OPERATION MODE SELECTOR" button.

Set to " -- " when you do not wish to use batch setting for the operation setting.

■ Group operation and stop method (Fig. 5)

This is for operating or stopping connected units in groups.

[Group operation]

1. Press the ☞ "ALL/INDIVIDUAL button" to enter the ☞ individual screen.

The unit will enter the individual screen automatically if nothing is done for one minute.

2. ☞ Using the arrow keys, ☞ move the " ▬ " to select the units to operate or stop.

Keeping the button pressed down will move it rapidly.

The " ▬ " in this screen has selected unit 1-04.

3. ☞ Press the "SELECT" button.

The " ■ " display lights up in the group.

☞ Press the "RESET" button.

The " ■ " display goes off in the group.

4. ☞ Press the "TEMPERATURE ADJUSTMENT" button.

The temperature rises 1° every time the (▲) button is pressed.
The temperature drops 1° every time the (▼) button is pressed.
Temperature adjustment cannot be done if the selected group's air conditioners are in fan mode.

5. ☞ Call up the desired mode by pressing the "OPERATION MODE SELECTOR" button.

■ Registering zones (Fig. 6)

It is possible to set multiple groups as one zone and control each zone separately.
No zones are registered when the unit is shipped from the factory.
Zone registration can be done in the individual screen, all screen, or zone screen.

[Registration]

1. ☞ Pressing the "ALL/INDIVIDUAL" button for four seconds. ☞ Displays ZONE SET.

Zone Number 1 will be displayed, and if there are any groups already registered displayed zone, a " ■ " will light up on the operation monitor.

C: 3P124623-8D

2. ③ Select the Zone Number to be registered using the "ZONE NUMBER" button.
Keeping the button pressed down will move it rapidly.

3. ⑤ " ▭ " to the group you wish to ④ register using the arrow keys.
Keeping the button pressed down will move it rapidly.

4. ⑥ Press the "SELECT" button to register that group to the zone.

The " ▣ " display lights up on all the selected units.

⑦ Pressing the "RESET" button removes the group from that zone, and " ▣ " goes off.

Repeat steps 3 and 4 until all the units you wish to register to the zone have been added.

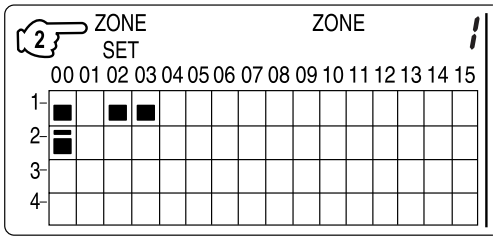

In this example, a screen is shown with units 1-00, 1-02, 1-03, and 2-00 registered to Zone Number 1.

5. Repeat steps 2 to 4 to register to the next zone.

6. Once zone registration is complete, ① press the "ALL/INDIVIDUAL" button to turn off "ZONE SET" display and return to the individual screen.
The display returns to the normal screen if nothing is done for one minute when in zone registration mode.

(NOTE)
- It is impossible to register one group to several different zones.
  If this is done, the last zone registered to will be valid.

[Batch deletion of zone registration]

1. ⑨ Pressing the " ALL ○ " for at least four seconds while ⑧ pressing the "FILTER SIGN RESET" button when ② "ZONE SET" is displayed will delete all zone registrations.
The zone registrations for all units will be lost.

■ Zone operation and stop method (Fig. 7)

This is for operating or stopping connected units in zones.

[Zone operation]

1. ① Press the "ALL/INDIVIDUAL button" to enter the zone screen.

2. ③ Using the arrow keys, select the zone number to operate or stop.

Pressing ← and ↓ reduces the zone number while → and ↑ raise the number.
Keeping the button pressed down will move it rapidly.
- If the zone number is displayed as "---," this indicates that no units are registered in a zone. Please perform zone registration before using a zone. (See page 9)

3. ④ Press the "SELECT" button.

The " ▣ " display lights up in the group.

⑤ Press the "RESET" button.

The " ▣ " display goes off in the group.

4. ⑥ Press the "TEMPERATURE ADJUSTMENT" button.
The temperature rises 1° every time the (▲) button is pressed.
The temperature drops 1° every time the (▼) button is pressed.

Set to " -- " when you do not wish to use zone setting for the temperature setting.
Setting to 1° above or below the temperature setting range displays " -- ".

5. ⑦ Call up the desired mode by pressing the "OPERATION MODE SELECTOR" button.

Set to " -- " when you do not wish to use zone setting for the operation mode.

■ Changing the fan direction and fan strength (Fig. 8)

This changes the fan direction and strength settings in the air conditioner.
Changing the fan direction and strength is done in the individual screen.

[Registration]

1. **Press the "ALL/INDIVIDUAL button" to enter the individual screen.**
   The unit will enter the individual screen automatically if nothing is done for one minute.
2. **Using the arrow keys, move the " " to select the units to fan direction adjustment or fan strength adjustment.**
   Keeping the button pressed down will move it rapidly.
3. **Press the "FAN DIRECTION ADJUSTMENT" button.**
   This sets "fixed" or "swing" for the fan direction.
   Press the "FAN STRENGTH ADJUSTMENT" button.
   Pressing this button scrolls through " L ", " H ", and " HH ".
   Depending on the indoor unit, only " L " and " H " may be available.

The functions included in the indoor units may vary. Pressing a button for a function which is not available will cause "NOT AVAILABLE" to be displayed.

■ Changing the ventilation mode and ventilation strength (Fig. 9)

This changes the ventilation mode and strength settings in the total enthalpy heat exchanger.
Changing the ventilation mode and strength is done in the individual screen.

[Registration]

1. **Press the "ALL/INDIVIDUAL button" to enter the individual screen.**
   The unit will enter the individual screen automatically if nothing is done for one minute.
2. **Using the arrow keys, move the " " to select the units to ventilation mode or ventilation strength adjustment.**
   Keeping the button pressed down will move it rapidly.
3. **Press the "VENTILATION MODE" button.**
   It will scroll through " " → " " → " " → " ".
   Press the "VENTILATION STRENGTH ADJUSTMENT" button.
   It will scroll through " L " → " H " → " L FRESH UP " → " H FRESH UP " → " L ".
   The fresh up function may not be available depending on the connected unit model.

The functions included in the indoor units may vary. Pressing a button for a function which is not available will cause "NOT AVAILABLE" to be displayed.

- **Ventilation Mode and Amount**
  If these are changed using the remote controller depending on the unit model, they cannot be displayed on the central remote controller.
  To monitor the ventilation mode and amount, check the values on the remote controller.

■ Timer Number Setting (Fig. 10)

(Only when used with the schedule timer)
Using this together with the schedule timer makes it possible to set on and off times four times a day.

[Registration]

1. **Pressing the "TIMER NO." button causes the number set for timer number 1 to blink.**
   If no timer setting has been made " – " will be displayed.
   Select the desired timer number by pressing the "TIMER NO." button.

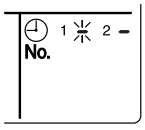

2. **Once the desired timer number is displayed, press the "SET" button.**
   Press the "SET" button within 10 seconds after the timer number is displayed.
   The display will return to how it was after 10 seconds.
   The display for timer number 1 will stop blinking and then timer number 2 will start blinking.

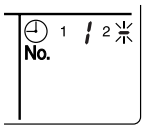

3P124623-8D

3. ☞ Select the desired timer number by pressing the "TIMER NO." button.

Once the desired timer number is displayed, ☞ press the "SET" button.
The display for timer number 2 will stop blinking.

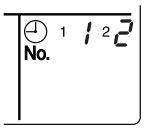

The " No. " display will disappear after 3 seconds.

Select " – " in the timer number when you do not wish to set a timer number.
It is possible to set only one timer number.
(The times for turning the unit(s) on and off twice a day can be set with a single timer number.)

- **Timer Number Setting**
  Group control: select the unit in the individual screen and set the timer number.
  Batch control: set the timer numbers for all connected units.
  Zone control: set the timer numbers for all zone-registered units.
  Call up the zones which you wish to set in the zone screen and set the timer numbers.
- **Since the timer number will be set to after-press priority, the timer number in the last screen set will be valid for the connected units.**

  Example 1
  Setting timer number 1 for unit 1-00 to "1" and timer number 2 to "2" in the individual screen and then setting timer number 1 to "3" and timer number 2 to "4" in the batch screen causes the timer numbers for all units to be set, so timer number 1 for unit 1-00 will be "3" and timer number 2 will be "4".

  Example 2
  To prevent leaving units on, timer number 1 is set to "5" in the batch screen.
  Setting timer number 1 in zone number 1 to " – " in the zone screen after that will change the timer number for zone number 1, so the setting to prevent leaving the units on will be lost for zone number 1 only.

  If a timer number is set incorrectly by accident, redo the setting in the desired screen.
- **What happens when the timer number on time and off time are set to the same time**

  When the on time and off time are set to the same time for the same timer number, operation does not change.
  When the on time and off time are set to the same time for different timer numbers, the off time is given priority.

When using timer operation, make sure the times do not overlap when setting the program of the schedule timer.

■ Setting the Operation Code (Fig. 11)

[Registration]

1. ☞ Pressing the "CONTROL MODE" button causes the currently set operation code to blink.

Call up the desired code number by pressing the ☞ "CONTROL MODE" button.
Scroll through the code numbers.

2. ☞ Once the code number is displayed, press the "SET" button.

The display will stop blinking.
The operation code display will disappear after 3 seconds.

[The Operation Code Setting]

Group control: select the unit in the individual screen and set the operation code.
Batch control: set the operation code for all connected units.
Zone control: set the operation code for all zone-registered units.
Call up the zones which you wish to set in the zone screen and set the operation code.

Since the operation code will be set for after-press priority, setting the operation code in the zone and individual screens after setting the operation code in the batch screen, will cause the operation codes set afterwards to be valid.

OPERATION MODE

The following five operation control modes can be selected along with the temperature setting and operation mode by remote controller, for a total of twenty different modes. These twenty modes are set and displayed with control modes of 0 to 19. (For further details, see **EXAMPLE OF OPERATION SCHEDULE** on the next page.)

- ON/OFF control impossible by remote controller..... Use this mode when operating and stopping from the central remote controller only. (ON/OFF control by the remote controller is disabled.)
- Only OFF control possible by remote controller ..... Use this mode when executing the operation only by the central remote controller, and executing only the stop by remote controller.
- Centralized ..... Use this mode when executing the operation only by the central remote controller, and executing start/stop freely by remote controller during the preset hours.
- Individual ..... Use this mode when executing start/stop both by central remote controller and remote controller.
- Timer operation possible by remote controller..... Use this mode when executing start/stop by remote controller during the preset hours, and not starting operation by the central remote controller at the programmed time of system start.

[HOW TO SELECT THE CONTROL MODE]

- Select whether to accept or to reject the operation from the remote controller regarding the operation, stop, temperature setting and operation mode setting, respectively, and determine the particular control mode from the rightmost column of the table below.

  Example

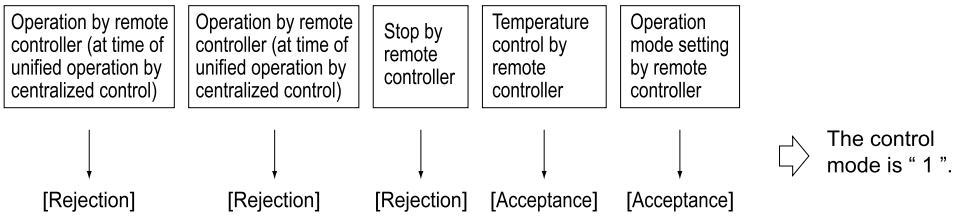

Operation mode	Control by remote controller					Control mode
	Operation		Stop	Tempera-ture control	Operation mode setting	
	Unified operation, individ-ual operation by central remote controller, or opera-tion controlled by timer	Unified stop, individual stop by central remote controller, or timer stop				
ON/OFF control impossible by remote controller	Rejection (Example)	Rejection (Example)	Rejection (Example)	Rejection	Acceptance	0
					Rejection	10
				Acceptance (Example)	Acceptance (Example)	1 (Example)
					Rejection	11
Only OFF control possible by remote controller			Acceptance	Rejection	Acceptance	2
					Rejection	12
				Acceptance	Acceptance	3
					Rejection	13
Centralized	Acceptance			Rejection	Acceptance	4
					Rejection	14
				Acceptance	Acceptance	5
					Rejection	15
Individual		Acceptance		Rejection	Acceptance	6
					Rejection	16
				Acceptance	Acceptance	7
					Rejection	17
Timer operation possible by remote controller	Acceptance (During timer at ON position only)	Rejection (During timer at OFF position)		Rejection	Acceptance	8
					Rejection	18
				Acceptance	Acceptance	9
					Rejection	19

Note) Do not select the timer operation possible without the remote controller. In this case, timer operation is disabled.

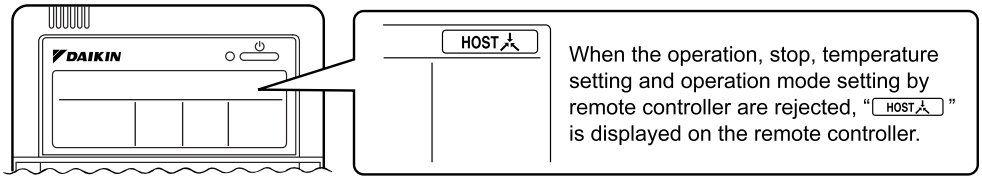

EXAMPLE OF OPERATION SCHEDULE

Operation schedule is possible only in conjunction with the schedule timer (optional accessory).

Liquid crystal display of schedule timer

ON/OFF control impossible by remote controller

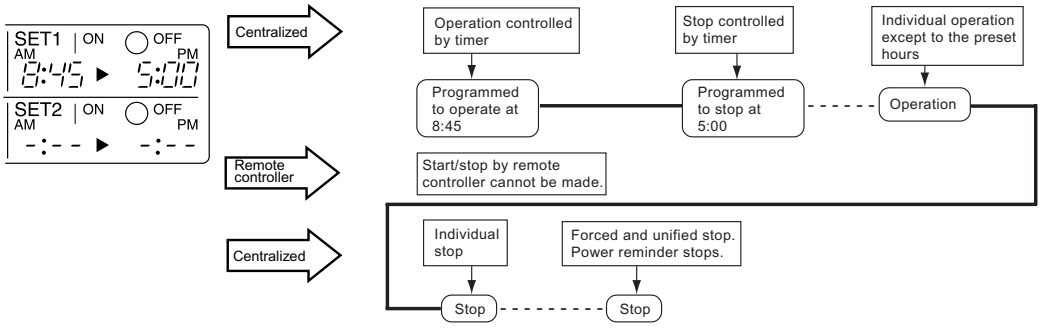

3P124623-8D

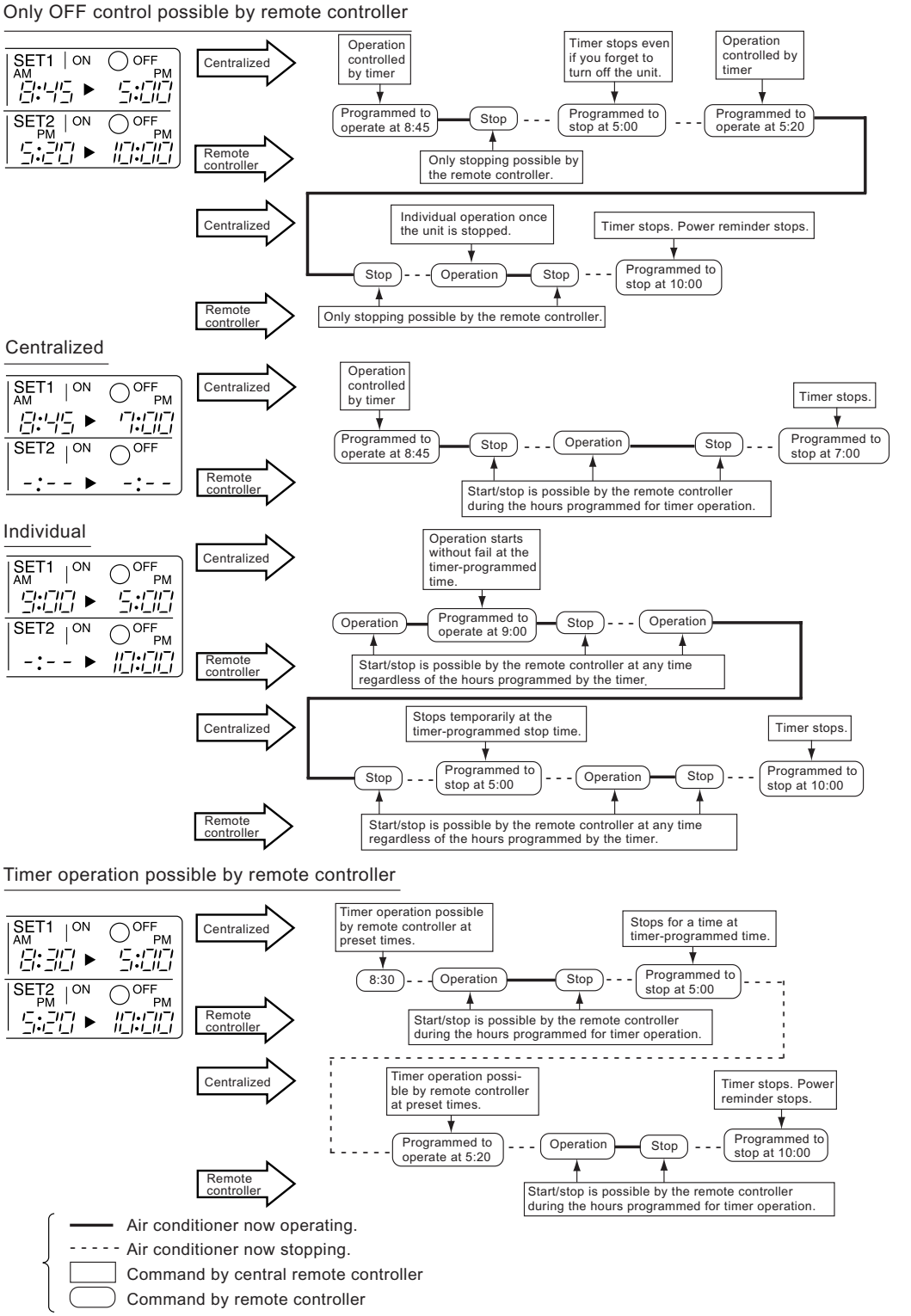

C: 3P124623-8D

2

■ Setting operation mode (Fig. 12)

[Registration]

1. Press the OPERATION MODE SELECTOR BUTTON. Each time you press this button, the display rotates as shown on the below list.

- **List of operations which can be set**
  In the below list, " ○ " refers to the acceptable setting, while " × " refers to the not acceptable setting.

Display	A: Zones and groups with no " " display. Setting	Contents of setting
	×	
	○	Can be set in individual zones or groups
	○ ∗1	Can be set in individual zones or groups
	○	Can be set in individual zones or groups
	○	Can be set in individual zones or groups
or or	○ ∗1	Can be set in individual zones or groups ∗3
	○ ∗1	Can be set in individual zones or groups
	○	Select this display if you don't wish to set by zone.

Display	B: Zones and groups with a " " display. Setting	Contents of setting
	○	To be set by zone ∗2
	○	Can be set in individual zones or groups
	×	
	×	The displays are shown by group ∗4
	×	The displays are shown by group ∗4
or or	○ ∗1	Can be set in individual zones or groups ∗3
	○ ∗1	Can be set in individual zones or groups
	○	Select this display if you don't wish to set by zone.

∗1: Setting may not be acceptable depending on the type of indoor unit with which this unit is connected.
∗2: In zone control, the units run in temperature adjustment mode (heating or cooling) for the outdoor system for the groups registered to those zones. Heating or cooling selection is not available.
*3: or or
Changing the ventilation mode cannot be done in the zone screen. Changing the ventilation mode should be done in the individual screen.
∗4: In group control, the units run in temperature adjustment mode (heating or cooling) for the group outdoor system. Heating or cooling selection is not available.

- **The Zone consists of the following two cases.**

A. Zone without display" "
The group with master remote controller setting exists in this zone.
Setting the master remote controller enables cool/heat selection.
Operations other than cool/heat operations can also be set for some operations. For further details, see the list on the left.

B. Zone with display" "
No group with master remote controller setting exists in this zone.
The cool/heat selection is not available because the master remote controller has not been set.
Some operations other than cool/heat operations can be set. For further details, see the list in the left.

See page 20 if the display" " is flashing.

- Fan operation can be performed for each zone using the central remote controller even if there is no cooling/heating selection right during cooling or heating. Also, if a Ventiair is connected in the zone, ventilation and ventilation cleaning operation is possible. See the included operating manuals for details.
- When the indoor unit is in heat operation, change the setting to FAN operation through the central remote controller; then, you can switch the fan speed to the extremely low fan speed. Warm air may blow if any other indoor unit belonging to the same system is in heat operation.
- The indoor fan stops during defrost/hot start.
- DRY cannot be set from the central remote controller.

■ Group monitoring (Fig. 13)

Utilize the group monitor function in each of the following cases:
1. Check the malfunction code. (See the next page.)
2. Check the group that requires cleaning of the air filter and air cleaner element. (See page 21.)
3. Change the setting of the master remote controller. (See page 20.)
4. Check the group(s) sharing the same outdoor unit. Or, check the particular group(s) with the master remote controller setting. (See page 20.)
5. Check the conditions of other individual groups.

When in zone screen

The zone screen will revert to the individual screen automatically if nothing is done in it for one minute.

[Registration]

1. **Press the "ALL/INDIVIDUAL" button to switch to the "INDIVIDUAL" screen.**
2. **Using the arrow key, move the " " to select the unit to be monitored.**

   Keeping the button pressed down will move it rapidly.

   The " " lights up and the status of that unit is displayed in the LCD. The cursor in the screen Fig. 13 has selected unit 2-06.

■ Error diagnosing function (Fig. 14)

This central remote controller is provided with a diagnosing function, for when an indoor unit stops due to malfunction. In case of actuation of a safety device, disconnection in transmission wiring for control or failure of some parts, the operation lamp, inspection display and unit No. start to flash; then, the malfunction code is displayed. Check the contents of the display, and contact your DAIKIN dealer because the above signs can give you the idea on the trouble area.

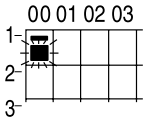

The display " " flashes under the group No. where the indoor unit that has stopped due to malfunction.

[Registration]

1. **Press the ARROW KEY BUTTON to call up the group that has stopped due to malfunction.**

   The unit No. the malfunction code is flashing because of an error failure.

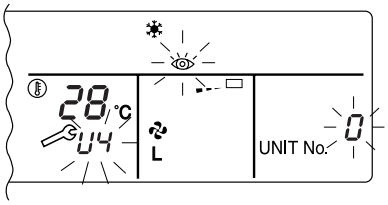

Operation lamp	Maintenance display	Unit No.	Malfunction code	Error content
☼	●	◑	**64**	Indoor air thermistor error
☼	●	◑	**65**	Outdoor air thermistor error
☼	●	◑	**68**	HVU error (Ventiair dust-collecting unit)
☼	●	◑	**6A**	Dumper system error
◑	◑	◑	6A	Dumper system error + Thermistor error
☼	●	◑	**6F**	Simple remote controller error
☼	●	◑	**6H**	Door switch (Ventiair dust-collecting unit), relay harness fault (Ventiair dust-collecting/humidifier unit)
◑	◑	◑	94	Ventiair internal transmission error (between total enthalpy – fan unit)
◑	◑	◑	A0	Indoor unit · external safety device error
◑	◑	◑	A1	Indoor unit · BEV unit (SkyAir connection unit) PC board assembly fault
☼	●	◑	**A1**	Indoor unit · PC board assembly fault
◑	◑	◑	A3	Indoor unit · Drain level error (33H)
◑	◑	◑	A6	Indoor unit · Fan motor (51F) lock, overload
☼	●	◑	**A7**	Indoor unit · Fan direction adjustment motor (MA) error
◑	◑	◑	A9	Indoor unit · BEV unit, electric expansion valve motor (20E) error
☼	●	◑	**AF**	Indoor unit · Malfunctioning drain
☼	●	◑	**AH**	Indoor unit · Dust-collector error
◑	◑	◑	AJ	Indoor unit · Insufficient capacity setting, address setting fault

◑	◑	◑	C4	Indoor unit · Liquid piping thermistor (Th2) Error (faulty connection, cut wire, short circuit, fault)
◑	◑	◑	C5	Indoor unit · BEV unit, gas piping thermistor (Th3) Error (faulty connection, cut wire, short circuit, fault)
◑	◑	◑	C9	Indoor unit · Intake air thermistor (Th1) Error (faulty connection, cut wire, short circuit, fault)
◑	◑	◑	CA	Indoor unit · Outlet air thermistor (Th4) Error (faulty connection, cut wire, short circuit, fault)
☼	●	☼	**CJ**	Indoor unit · remote controller sensor error
◑	◑	◑	E0	Outdoor unit · Safety device operation
◑	◑	◑	E1	Outdoor unit · PC board assembly fault
☼	●	◑	**E1**	Outdoor unit · PC board assembly fault
◑	◑	◑	E3	Outdoor unit · High-pressure switch fault
◑	◑	◑	E4	Outdoor unit · Low-pressure switch fault
◑	◑	◑	E9	Outdoor unit · Electric expansion valve motor (20E) error
☼	●	◑	**EC**	Heat source unit · Intake water temperature inter-lock operation (fan operation)
◑	◑	◑	EF	Outdoor unit · Ice thermal storage unit error
◑	◑	◑	F3	Outdoor unit · Discharge piping temperature error
☼	●	◑	**H3**	Outdoor unit · High-pressure switch operation
◑	◑	◑	H4	Outdoor unit · Low-pressure switch operation
◑	◑	◑	H9	Outdoor unit · Outdoor air thermistor (Th1) Error (faulty connection, cut wire, short circuit, fault)
☼	●	◑	**H9**	Outdoor unit · Outdoor air thermistor (Th1) Error (faulty connection, cut wire, short circuit, fault)
☼	●	◑	**HC**	Outdoor unit · Water temperature sensor system error
☼	●	◑	**HF**	Ice thermal storage unit error, ice thermal storage controller error, error in outdoor unit during ice thermal storage operation
◑	◑	◑	HJ	Outdoor unit · water system fault
◑	◑	◑	J1	Outdoor unit · pressure sensor error
◑	◑	◑	J3	Outdoor unit · Discharge piping thermistor (Th3) Error (faulty connection, cut wire, short circuit, fault)
☼	●	◑	**J3**	Outdoor unit · Discharge piping thermistor (Th3) Error (faulty connection, cut wire, short circuit, fault)
◑	◑	◑	J5	Outdoor unit · Intake piping thermistor (Th4) Error (faulty connection, cut wire, short circuit, fault)
◑	◑	◑	J6	Outdoor unit · Heat exchange thermistor (Th2) error
☼	●	◑	**J6**	Outdoor unit · Heat exchange thermistor (Th2) error Error (faulty connection, cut wire, short circuit, fault)
◑	◑	◑	J7	Outdoor unit · Header thermistor (Th6) error
◑	◑	◑	JA	Outdoor unit · Discharge piping pressure sensor error
◑	◑	◑	JC	Outdoor unit · Intake piping pressure sensor error
◑	◑	◑	JF	Outdoor unit · Oil temperature sensor (Th5) system error
☼	●	◑	**JH**	Outdoor unit · Oil temperature sensor (Th5) system error
◑	◑	◑	L0	Outdoor unit · Inverter system fault
◑	◑	◑	L4	Outdoor unit · Inverter cooler fault
◑	◑	◑	L5	Outdoor unit · Ground circuit for compressor motor, short circuit, or power unit short circuit

◑	◑	◑	L6	Outdoor unit · Ground circuit for compressor motor, short circuit
☼	◑	◑	L8	Outdoor unit · Compressor overload, compressor motor wire disconnection
◑	◑	◑	L9	Outdoor unit · Compressor lock
◑	◑	◑	LA	Outdoor unit · Power unit error
◑	◑	◑	LC	Outdoor unit · Transmission error between inverter and outdoor control unit
☼ or ●	◑	◑	M1	Central controller: PC board fault
☼ or ●	◑	◑	M8	Transmission error between central controllers
☼ or ●	◑	◑	MA	Central controller: Incorrect combination
☼ or ●	◑	◑	MC	Central controller: Address setting fault
◑	●	◑	**P0**	Insufficient gas (thermal storage)
◑	◑	◑	P1	Outdoor unit · Power voltage imbalance, phase loss
◑	◑	◑	P4	Outdoor unit · Power unit temperature sensor error
☼	●	◑	**U0**	Pressure drop due to insufficient refrigerant, electric expansion valve fault, etc.
◑	◑	◑	U1	Reversed or lost phase
◑	◑	◑	U2	Power voltage error, momentary electrical stoppage
◑	◑	◑	U4	Transmission error between indoor unit/BEV unit and outdoor/BS unit, Transmission error between outdoor unit and BS unit
◑	◑	◑	U5	Transmission error between remote controller and indoor control unit
●	☼	●	U5	Remote controller board fault or remote controller setting fault
◑	◑	◑	U6	Transmission error between indoor units
◑	◑	◑	U7	Transmission error between outdoor units Transmission error between outdoor unit and ice thermal storage unit
☼	●	◑	**U7**	Transmission error between outdoor units (cooling/heating batch, low-noise operation)
◑	◑	●	U8	Transmission error between master remote controller and slave remote controller (slave remote controller error) Incorrect combination of indoor unit and remote controller within a single system (model)
◑	◑	◑	U9	Transmission error between indoor unit/BEV unit and outdoor unit within a single system Transmission error between BS unit and indoor unit/BEV unit and outdoor unit within a single system
◑	◑	◑	UA	Incorrect combination of indoor, BS, and outdoor units within a single system (model, number of units, etc.) Incorrect combination of indoor unit and remote controller (remote controller in question) BS unit connection position fault
☼	●	☼	**UC**	Central control group numbers overlap
◑	◑	◑	UE	Transmission error between indoor unit and central controller
◑	◑	◑	UF	Unset system, incorrect settings between BEV unit and indoor unit
◑	◑	◑	UH	System fault

▬ error codes (in outline font) do not display “maintenance” and the system will run, but please check the content of the display and contact your dealer.

■ Setting master remote controller (Fig. 15)

You must set the master remote controller of the operation mode for one of the indoor units, if two or more such indoor units with the remote controller are connected with the outdoor unit where the operation modes such as cool/heat operation and FAN operation can be set by remote controller and central remote controller.

1. Preparations

When you want to fix settings

- **Check the particular group with the master remote controller setting for the refrigerant system you wish to reset. (See the below.)**
- **Call up the group without the display " " (See page 16.)**

  Hold the OPERATION MODE SELECTOR BUTTON down for about four seconds while the above group is being called up.

  The display " " flashes on the liquid crystal display of the remote controller for all the groups sharing the same outdoor unit or BS unit.

  When you turn on the power switch for the first time, the display" " flashes.

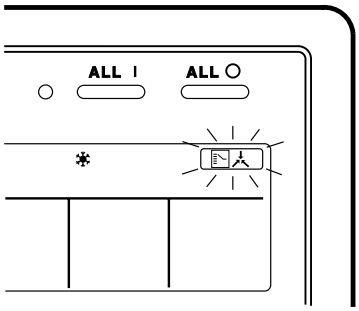

2. Setting selection right

Pall up the desired group to set the master remote controller, and press the OPERATION MODE SELECTOR BUTTON. The master remote controller is set for this group, and the display " " goes out. The display " " appears for the other groups.

Setting is finished now.

When switching operation

● In case of operation switch

Call up the zone including the group with the setting of master remote controller.

(Zone without the display " ")

Press the OPERATION MODE SELECTOR BUTTON several times, and switch to the desired operation mode.

Each time you press it, the display is switched to " " " " " " and " " in sequence.

NOTE

- However, the displays " " " " and "VENTILATION MODE" may appear in some zones, depending on the type on indoor unit with which they are connected.
  (VENTILATION MODE)
  or or

[System Display]

1. Test run mode is necessary to display the system display.
2. In order to turn on test run mode, select the appropriate air conditioner on the individual screen with the cursor and then set its operation mode to either cooling or heating. (The air conditioner does not need to be running. It doesn't matter if it is, though.)
3. Press the "inspection/test run" button twice to put it into test run mode.
4. Pressing the "inspection/test run" button for four or more seconds in test run mode will display the "REF CIRCUIT."

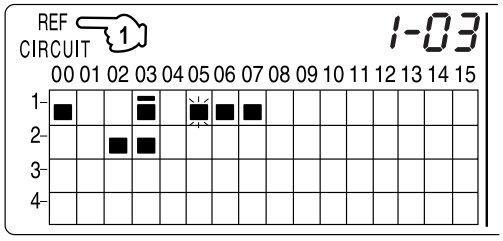

Call the unit whose system you wish to look up using the arrow keys.

The " ■ " on all groups in the same system as the displayed group will light up.

Of those, the " ■ " display in all groups which have cooling/heating selection privilege will blink.

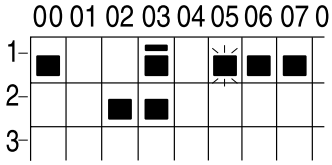

In this example, individual units 1-00, 1-03, 1-05, 1-06, 1-07, 2-02, and 2-03 are in the same system, and 1-05 has the cooling/heating selection privilege.
To look up other systems, call up all the units you wish to look up using the arrow keys.
Pressing the inspection/test run button one more time gets rid of the system display and ends it.
The unit will enter the individual screen automatically if nothing is done for one minute in the system display screen.
This function may not be available for all connected outdoor units, in which case "REF CIRCUIT" will blink. It will also not be correctly displayed if DIII-NET extension ADP is used.

■ Display of time to clean (Fig. 16)

This central remote controller displays the time to clean the air filter or air cleaner element for each group or any given group by utilizing two types of signs. The display " " tells the time to clean the air filter or the air cleaner element of some group.

If a cleaning sign is displayed

A filter or element in some group is ready to be cleaned.

1. Press the ARROW KEY BUTTON, and search the groups displaying " " or " " (The group may be plural.)

Clean or change the air filter or air cleaner element.
For further details, see the operation manual attached to each indoor unit. (Clean or change the air filter or air cleaner element of all the groups displaying " " or " ".)

2. Press the FILTER SIGN RESET BUTTON, and the display " " disappears. (Including all the groups where the air filter has been cleaned.)

NOTE

Be sure to check the display " " has disappeared at this point. The appearance of the above display is a sign that the air filter or air cleaner element of some group still needs cleaning.

INSTALLATION TABLE

When installing the equipment, mark the zone No. of each group and installation location in the below table.

Setting group No.
(Setting is not possible unless power is activated to both the central remote controller and indoor unit.)

Operated by remote controller

1. Activate power to both the central remote controller and indoor unit.
2. While in the normal mode, hold down the " " button for a minimum of 4 seconds. The unified ON/OFF controller will enter the FIELD SET MODE.
3. Select the MODE No. " " with the " " button.
4. Use the " " button to select the group No. for each group. (Group No. increases in the order of 1-00, 1-01 ... 1-15, 2-00, ... 8-15.)
5. Press " " to set the selected group No.
6. Press " " to return to the NORMAL MODE.

Operated by simplified remote controller

1. Activate power to both the central remote controller and indoor unit.
2. Remove the upper part of the remote controller.
3. Press the BS6 BUTTON (field set) on the PC board. The controller will enter the FIELD SET MODE.
4. Select the MODE No. " " with the BS2 BUTTON and BS3 BUTTON (temperature setting).
5. Use the BS9 BUTTON (set A) and BS10 BUTTON (set B) to select the group No. for each group. (Group No. increases in the order of 1-00, 1-01 ... 1-15, 2-00, ... 8-15.)
6. Press BS7 BUTTON (set/cancel) to set the selected group No.
7. Press BS6 BUTTON (field set) to return to the NORMAL MODE.

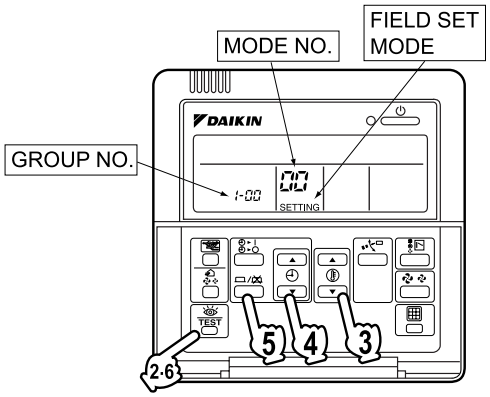

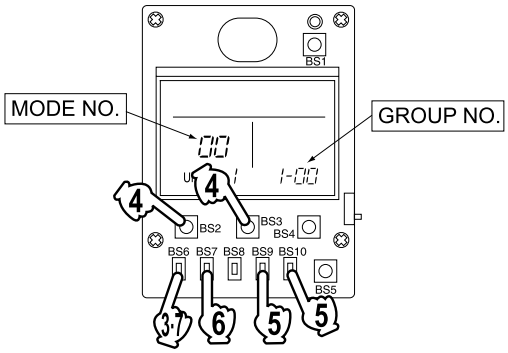

Zone No.																
Group No.	–00	–01	–02	–03	–04	–05	–06	–07	–08	–09	–10	–11	–12	–13	–14	–15
Indoor unit Quantity of units Controlled by																
Location																
Zone No.																
Group No.	–00	–01	–02	–03	–04	–05	–06	–07	–08	–09	–10	–11	–12	–13	–14	–15
Indoor unit Quantity of units Controlled by																
Location																

3P124623-8D

Zone No.																
Group No.	–00	–01	–02	–03	–04	–05	–06	–07	–08	–09	–10	–11	–12	–13	–14	–15
Indoor unit Quantity of units Controlled by																
Location																
Zone No.																
Group No.	–00	–01	–02	–03	–04	–05	–06	–07	–08	–09	–10	–11	–12	–13	–14	–15
Indoor unit Quantity of units Controlled by																
Location																

OPTIONAL ACCESSORIES

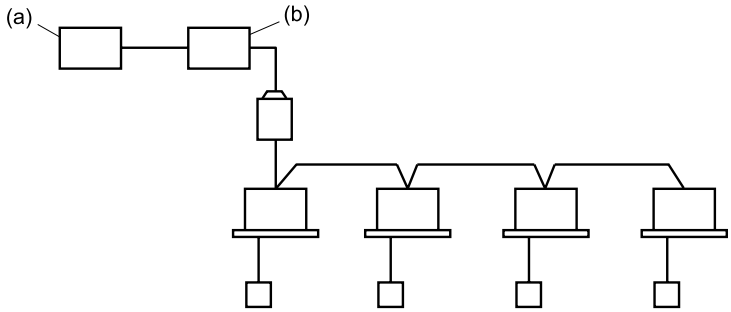

You can perform the normal operation, take off the malfunction contact point and unified start/stop by contact point, all by connecting this unit with the unification adaptor for computerized control. For further details, ask your DAIKIN dealer.

(a) Unification adaptor for computerized control (b) Central remote controller

DOUBLE CENTRAL REMOTE CONTROLLERS

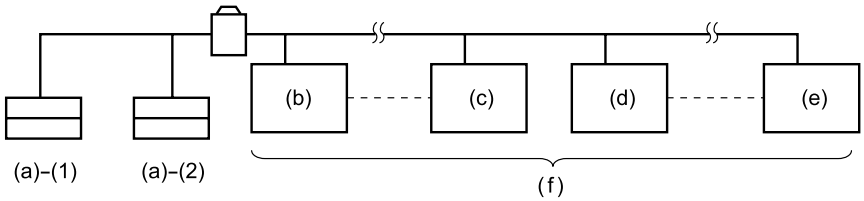

With two central remote controllers, centralized control (indoor units) is possible from different locations.

(a) Central remote controller (b) Group No. 1 – 00 (c) Group No. 1 – 15 (d) Group No. 2 – 00
(e) Group No. 4 – 15 (f) A maximum of 64 groups

Note)

- For control alignment and settings for double central remote controllers, contact your dealer.

3P124623-8D

SPECIFICATIONS

■ Specifications

Power supply	1 ~ 50/60Hz, 100V – 240V
Power consumption	Max. 8W
Forced ON/OFF input	Continuous “a” contact Contact current: approximately 10mA
Size	180 (W) × 120 (H) × 64.5 (D)
Weight	420g

■ Outline drawings

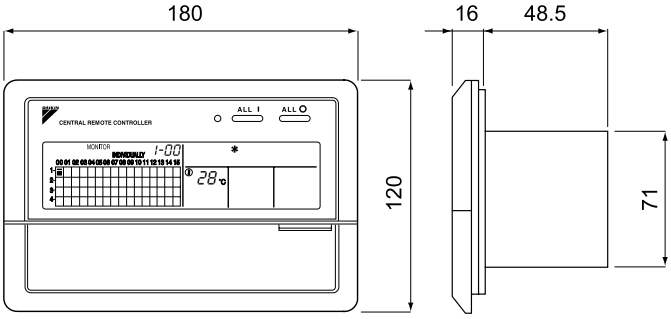

When using this unit an electric parts box of KJB311AA is required.
For installation, a steel electric parts box to be embedded is mandatory.

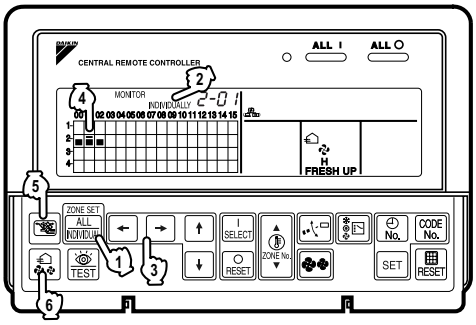

Fig. 9

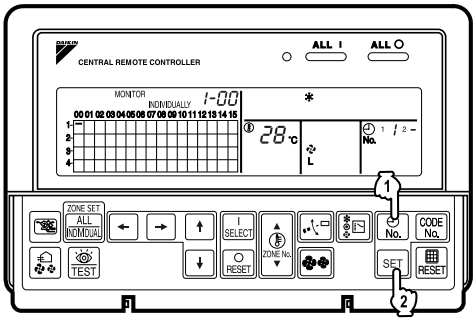

Fig. 10

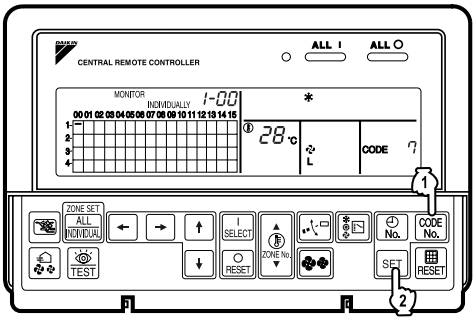

Fig. 11

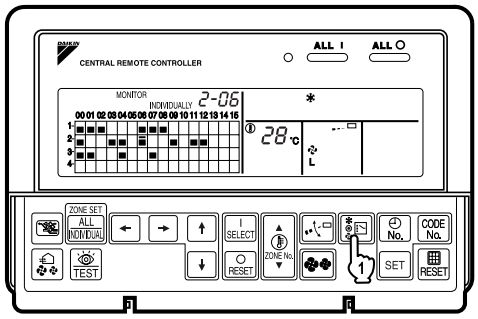

Fig. 12

3P124623-8D

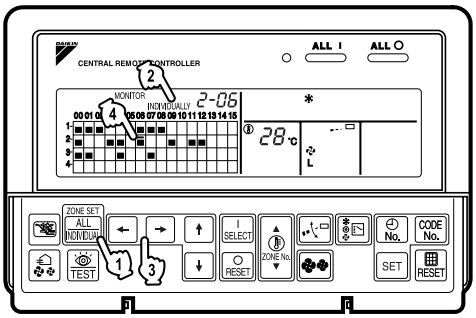

Fig. 13

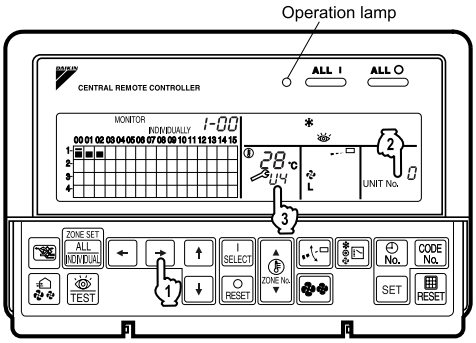

Fig. 14

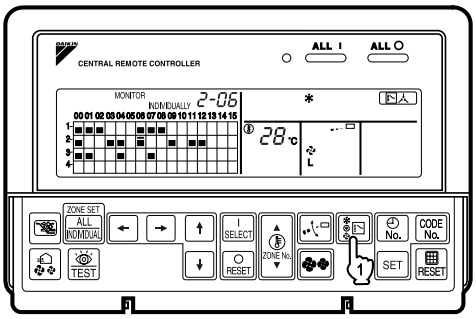

Fig. 15

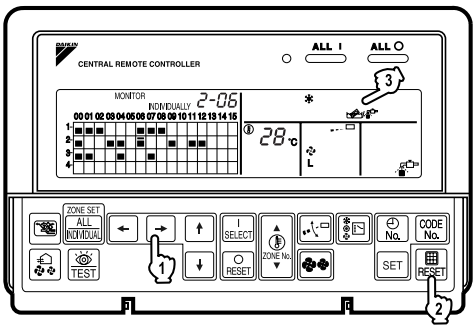

Fig. 16

16.1.4 Installation Manual

❶ COMPONENTS

Check the following components are included in this optional accessory before installation.

Installation screw (M4 × 16)	4
Operation manual	1
Installation manual	1
Installation table	1

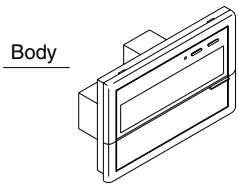

When using this optional accessory an electric parts box of KJB311A is required.
For installation, a steel electric parts box to be embedded is necessary.

❷ SYSTEM CONFIGURATION

With the central remote controller, unified ON/OFF is possible with up to a maximum 64 groups of indoor units.
When using 2 central remote controllers, unified operation is possible with up to a maximum 128 groups.
With this optional accessory, setting of control modes including operation, stop, operation controlled by timer, and ON/OFF control possible/impossible by remote controller can be set individually by zones while it enables to control and display the operation state such as set temperature.
It can be connected with the external key system, BMS, etc., through forced OFF input (no-voltage normally open contactor).
A zone is a one or more groups together. In general, the same settings are used throughout a zone.

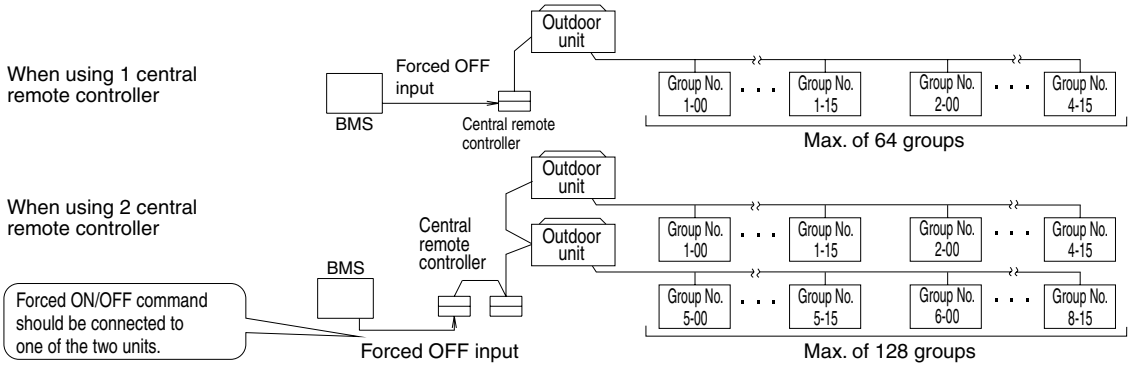

The central remote controller and the separately sold remote control adaptor circuit board or group remote control adaptor cannot be used together. See the D-BACS design guide for details.

❸ INSTALLATION

(1) Open the upper part of remote controller.
Insert a ⊖ screwdriver(2 locations) into the recess between the upper part and the lower part of remote controller and twist the screwdriver lightly.

PC board is attached with both the upper and lower part of remote controller. Do not damage the board with the screwdriver.

(2) Open the upper part of remote controller and install the Electric parts box with the attached installation screws (M4 × 16).

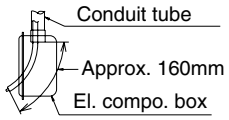

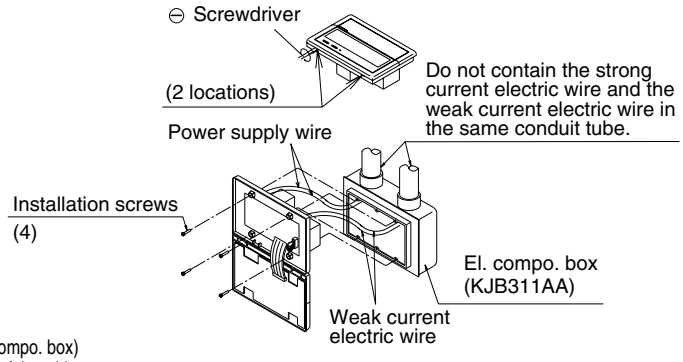

NOTE) Suitable length of the electric wire is about 160mm. (from el. compo. box)
If it is difficult to contain a long wiring, strip the sheathed part of the wiring.

C: 2P162816

❹ INITIAL SETTING

Setting (1) through (3) are initialized when power is turned ON, therefore complete settings BEFORE activating the power. (The positions of connectors and switches used for settings in this section are shown in Fig. 1.)

(1) Connector for setting master controller (X1A) (Provided with connector at factory set)

- When using only 1 central remote controller, do not disconnect the connector for setting master controller. (Use the unit with the connector in the state in which it was delivered.)
- When using multiple central remote controllers, or using the central remote controller in conjunction with the optional controllers for centralized control, makes settings as indicated in the below table.

Pattern of connection of optional controllers for centralized control			Connector for setting master controller (X1A) Setting, Removed		
Central remote controller	Unified ON/OFF controller	Schedule timer	Central remote controller	Unified ON/OFF controller	Schedule timer
1 to 4			Set one to "Used" and all the rest to "Not used"		
	1 to 16			Set all to "Not used"	
		1			"Not used"
		1			"Not used"

(Remove all the connectors for the central remote controller, the on/off controller, and the schedule timer when using the unit together with the Ve-UP controller, the master station II, the DMS interface, the payment management unit, or the parallel interface station.)

(2) Address setting

Two central remote controllers can be used as shown in ❷ SYSTEM CONFIGURATION, to control anywhere up to a max. 128 groups of indoor units. In this case, group address must be set. This is done with the switch for setting each address (SS3).

SS3 setting	Indoor unit address
SETTING EACH ADDRESS 5-00 ~ 8-15 / 1-00 ~ 4-15	To control indoor units from group Nos. 1-00 through 4-15

SS3 setting	Indoor unit address
SETTING EACH ADDRESS 5-00 ~ 8-15 / 1-00 ~ 4-15	To control indoor units from group Nos. 5-00 through 8-15

(3) MAIN/SUB changeover switch setting

With two central remote controllers, centralized control (indoor units) is possible from different locations. In this kind of set-up, it is necessary to set the MAIN/SUB changeover switch.

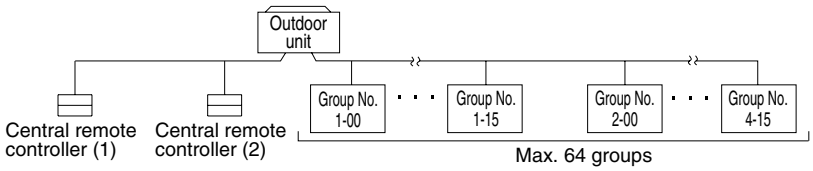

One of the two central remote controllers (1) · (2) is set to "MAIN" while the other is set to "SUB".

(4) Setting of the sequential operation function

The central remote controller is equipped with a sequential operation function that sequentially turns indoor units on in 2-second intervals during unified operation. (Sequential operation is factory set to "ON.") To switch sequential operation ON or OFF, set as follows.

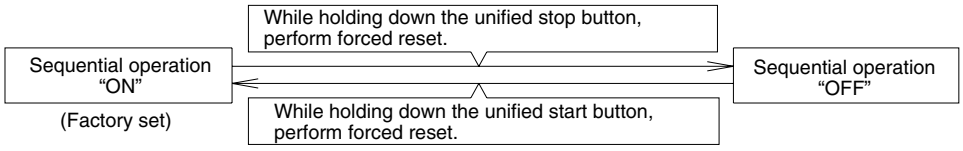

NOTE: The sequential operation function is designed to reduce the load on the power supply equipment, but does not guarantee that compressors will not be started simultaneously. You cannot therefore count on a capacity reduction effect by power supply equipment breaker selection.

(5) Forced reset switch

When changing the setting of the connector for setting master controller, etc., you can reset simply by setting it to the reset side once and returning to the normal side, without turning the power OFF.
(For normal operation, set the switch to the normal side.)

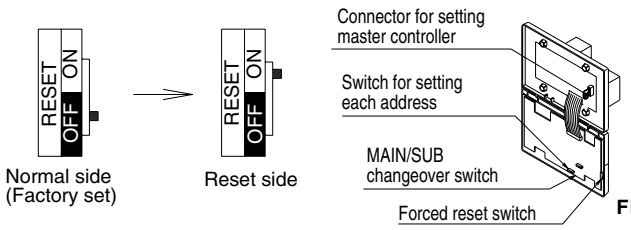

Fig. 1

2P162816

5 ELECTRIC WIRING

WIRING OUTLINE

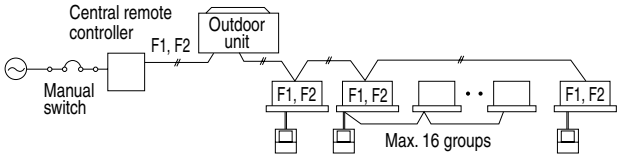

WIRING TO THE INDOOR UNIT AND OUTDOOR UNIT

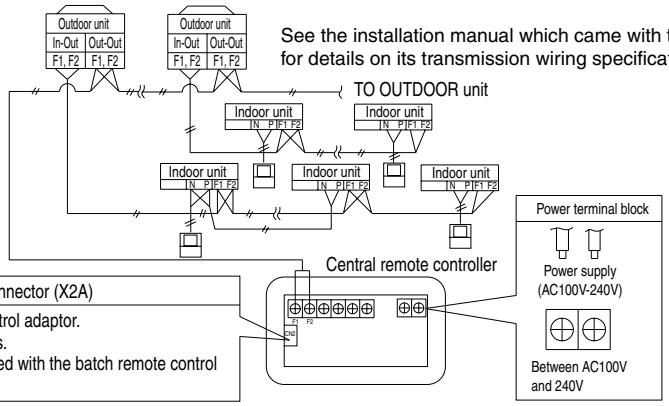

See the installation manual which came with the air conditioner for details on its transmission wiring specifications.

Wiring specifications

Power supply wiring	2mm²
Transmission wiring for control	0.75 – 1.25 mm² sheathed vinyl cord or cable (balanced type) – maximum length 1000 m (total overall wiring length 2000 m)
Manual switch	10A or 15A

Wire the indoor units to the outdoor units and between all power, indoor units, and remote controllers. See the installation manual included with the indoor and outdoor units for details.

CONTROL TERMINAL STRIP

*1 For connecting Indoor unit (F1, F2)
*2 Forced OFF input (T1, T2)
None of the indoor units connected to the forced OFF input contact (non-voltage contact with minimal current) will operate when it is shut off.
Use only contactors which guarantee the minimum applicable load DC 16V, 10mA.

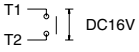

NOTE) Use instantaneous contactor of over 200m sec. energizing time, when necessary.

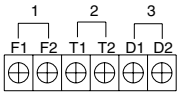

*3 For schedule timer (D1, D2)
Power can be supplied to the schedule timer (DST301B51· 61) separately sold. For details, refer to the installation manual of the schedule timer.
Wire *2 and *3 only when necessary.

(NOTE)
Do not connect the power supply wiring (100 to 240V) to the control terminal strip. If connected by mistake, it may damage or burn electrical parts of optional controllers for centralized control and indoor unit. It may result in serious danger. Be sure to check wirings before turning the power ON.

2P162816

6 SETTING GROUP NO. FOR CENTRALIZED CONTROL

Set the group number of each group of the indoor unit from the remote controller. (In case of no remote controller, also connect the remote controller and set the group No. Then, remove the remote controller.)

(1) Turn ON the power of the indoor unit and central remote controller.
(Unless the power is ON, no setting can be made.)
Check that the installation and electrical wiring are correct before turning the power supply ON.
(When the power supply is turned ON, all LCD appear once and the unit may not accept the operation for about one minute with the display of "88".)

(2) While in the normal mode, hold down the "TEST" button for a minimum of 4 seconds.
The remote controller will enter the FIELD SET MODE.

(3) Select the MODE No. "00" with the "" button.

(4) Use the "" button to select the group No. for each group.
(Group numbers increase in the order of 1-00,1-01,···1-15, 2-00, ···8-15.)

(5) Press "" to set the selected group No.

(6) Press "TEST" to return to the NORMAL MODE.

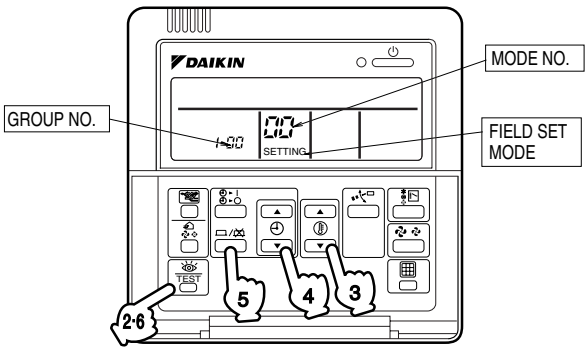

NOTES)
- For simplified remote controller, see the installation table.
- See the installation manuals which came with the Ventiair and adaptors (i.e., multi-purpose adaptors) for details on their Group No. settings.

NOTICE
Enter the group No. and installation place of the indoor unit into the installation table in the operation manual.
Be sure to keep the operation manual for maintenance.

7 TEST OPERATION (Perform a test operation in the individual screen before registering zones.)

Before starting test operation, check that the power is supplied to the indoor and outdoor units, and central remote controller.

(1) Select the display "INDIVIDUALLY"
Press "" button to display "INDIVIDUALLY"

(2) Select the group to be tested.
Select the group No. with "" "" "" "" button.

(3) Press "" button to select the test operation mode.
" TEST " is displayed.
"" is displayed on the remote controller.

(4) Press "" button within 10 seconds after entering into the test operation mode.
Operation the unit for 30 minutes.
When pressing the "" button, the unit stops operating.
If the operation lamp flashes, it indicates a malfunction.
Call the group of flashing display, confirm malfunction code, and check the source of malfunction.
(The operation manual lists all error codes, so refer to it.)

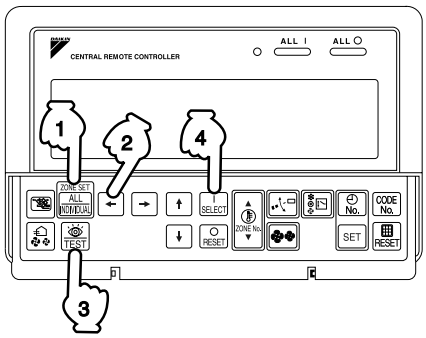

NOTES
- For test operation, refer to the installation manual of the outdoor unit.
- After turning the power supply ON, if the unit does not accept operation for two minutes or more with the display of "88", check the following points.
  - Check that setting of the connector for setting master controller is correct.
  - Check that the group No. for centralized control has been set.

2P162816

17. Electrical Box with Earth Terminal

17.1 KJB212AA / KJB311AA / KJB411A

INSTALLATION POINT OF SWITCH BOX

PARTS • Check the parts according to the list shown below.

NAME		SWITCH BOX	COVER	WOOD SCREW A (5.1×25)	CLAMP SCREW B (M4×16)	EARTH SCREW (M4×12)	C-CUP WASHER	LABEL FOR EARTH
Q	KJB212A(A)	1	1	4	4	3	2	1
T	KJB311A(A)	1	1	4	4	3	3	1
Y	KJB411A	1	1	4	4	—	—	—
SHAPE								

INSTALLATION

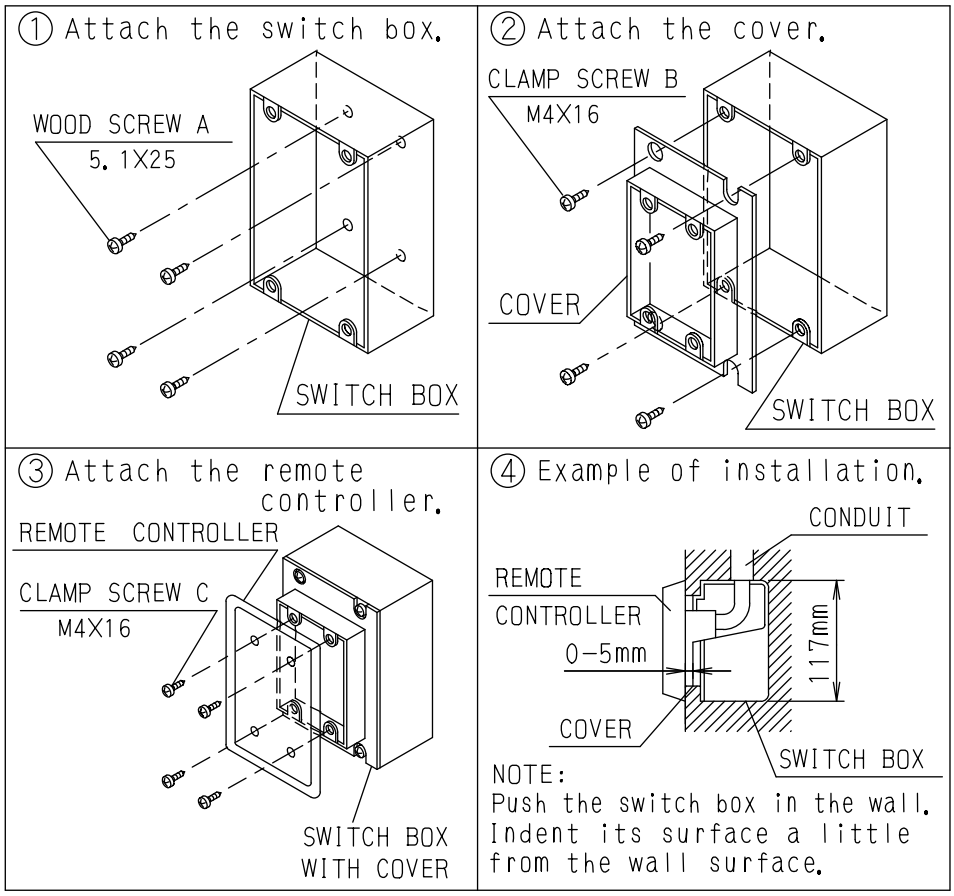

C: 3PA34878C

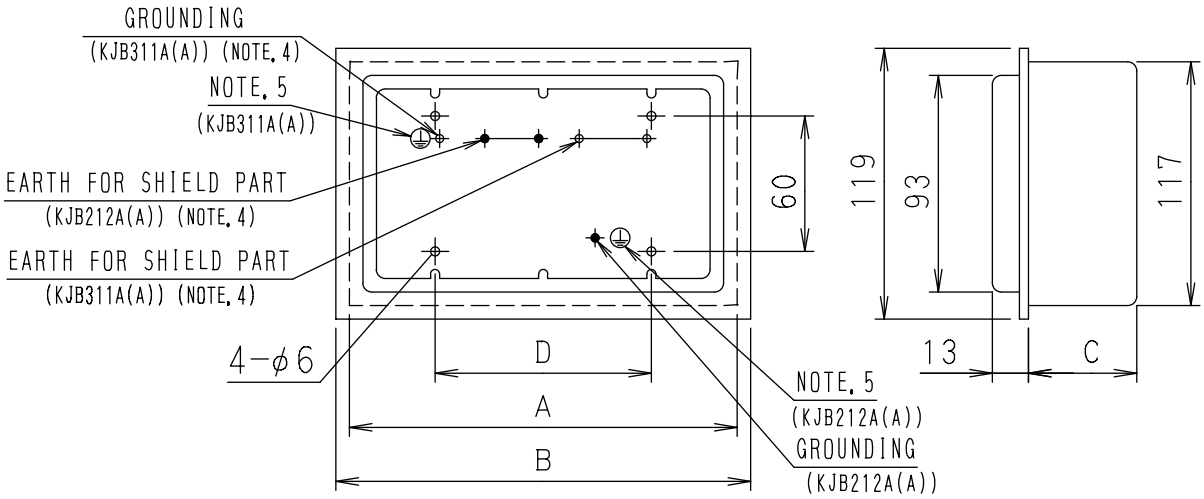

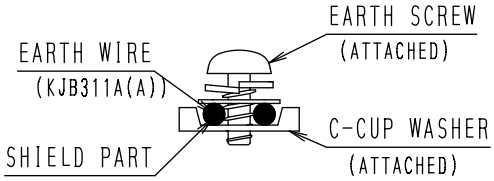

Fig. 1

MODEL	SIZE (mm)			
	A	B	C	D
KJB212A(A)	136	138	44	70
KJB311A(A)	182	184	44	110
KJB411A	228	230	54	155

NOTES:
1. Refer to the installation of each remote controller.
2. Do not bind the lead wires for switch box with the power cord and the link wiring.
   This may cause erratic operation.
3. The remote controller and the clamp screw C are one kit.
   They are sold separately and attach to the switch box.
4. Ground the shield part of shielded wire or earth wire (only KJB311A(A)) as shown in the Fig. 1.
5. Stick the label for earth attached to the equipment.

C: 3PA34878C

18. Unified ON/OFF Controller

18.1 DCS301BA61

18.1.1 Features

Turns up to 16 groups of indoor units (max. 128 units) ON/OFF (operation/stop) by individual group or all at once, and lets you check display of operation/malfunction at the same time.

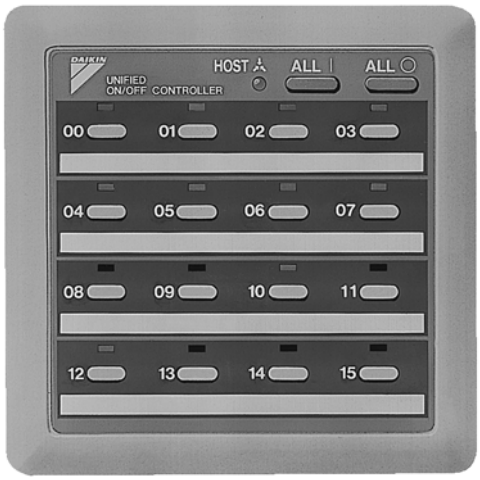

- For a maximum of 16 groups of indoor units (max. 128 units), unified operation/stop or individual operation/stop can be performed with this optional accessory. Also allows you check operation/error display at a glance.
- By combining with a central remote controller and schedule timer, you can construct a system that matches the size and use of the building.
- Up to 8 units connectable within 1 system.
  Up to 16 units in the double centralized control mode.
- Features thin design of a mere 16mm in thickness. (Use of the optional JIS 2-block wall embedded box (KJB212AA))
- Can be used in combination with other D-BACS equipment.

18.1.2 Dimensions

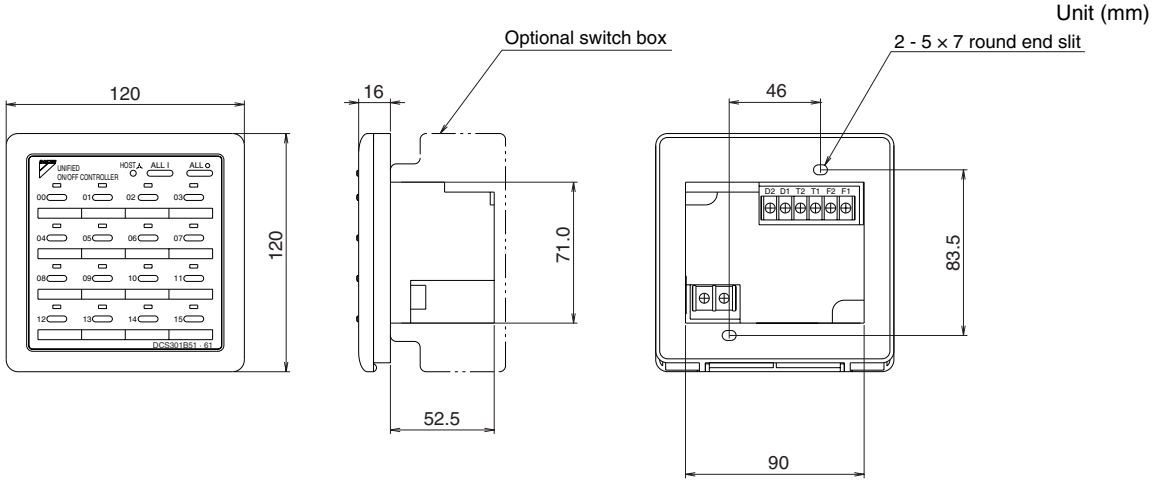

3D050339

18.1.3 Operation Manual

❶ NAMES AND FUNCTIONS

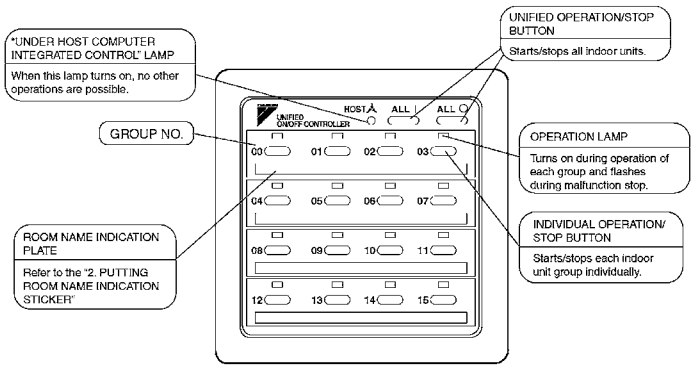

《 NOTE 》
- When using unified ON/OFF controller with other optional controllers for centralized control, "OPERATION LAMP" of the equipment which is not operated may turn on or off after several minutes.
  This state occurs due to signal communications and is not a failure.
- Do not open the upper part of remote controller except when rewriting the indication sticker or selecting control modes.

❷ PUTTING ROOM NAME INDICATION STICKER

① Open the upper part of remote controller.
Insert a (–) screwdriver into the recess between the upper and lower part of remote controller (at 2 locations) and twist the screwdriver lightly.

PC board is attached both the upper and lower part of remote controller. Do not damage the board with the screwdriver.

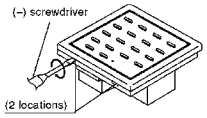

② Pull out the room name indication plate.
Insert the point of a mechanical pencil etc. into the hole of the indication sticker to pull it out.

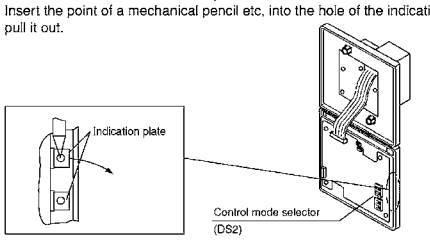

③ Put the attached indication sticker on the room name indication plate.

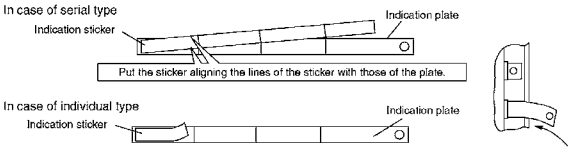

Put the sticker on the center of the frame.
Write the room name in the frame of the sticker with a ball point pen or a felt-tip pen (oil-base).

④ Reinstall the plate as it were, with checking the correct direction.
⑤ Close the upper part of remote controller.

❸ SELECTING CONTROL MODES

The following four patterns of control mode can be set.

Control mode	Individual	Centralized	Timer operation possible by remote controller	ON/OFF control impossible by remote controller
Content	Operation/stop is controlled by both unified ON/OFF controller and remote controller.	After operated by unified ON/OFF controller, operation/stop is freely controlled by remote controller until stopped by unified ON/OFF controller.	When used in conjunction with schedule timer, operation/stop is controlled freely by remote controller during the set time but operation is not available when schedule timer is ON.	Operation/stop is controlled by unified ON/OFF controller only. Indoor units can not be operated/ stopped by remote controller.
DS2 setting	ON 1 2 CONTROL MODE (Factory set)	ON 1 2 CONTROL MODE	ON 1 2 CONTROL MODE	ON 1 2 CONTROL MODE

NOTE : • ■ indicates the position of switches.
• Set control modes before turning power supply on.
• When used in conjunction with central remote controller, the control modes of the central remote controller has the priority.

❹ DISPLAY OF MALFUNCTION

Flashing of lamps indicates malfunctions. Contact your Daikin dealer.
When turning power supply on, all lamps may light and UNDER HOST COMPUTER INTEGRATED CONTROL lamp may flash and not accept the operation for about one minute.
These conditions are not malfunctions.

States of lamps	Contents of malfunctions
Flashing of operation lamp	Indicates malfunctions in the indoor unit in the group where the operation lamp is flashing.
Flashing of UNDER HOST COMPUTER INTEGRATED CONTROL lamp	Indicates malfunctions in optional controllers for centralized control.

2P167410A

18.1.4 Installation Manual

1 COMPONENTS

Check the following components are included in this optional accessory before installation.

Body

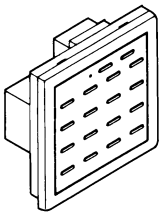

Installation screw (M4 x 16)	2
Operation manual	1
Installation manual	2
Installation table	2
Switch display sticker	1

For installation, a steel electrical box to be embedded is necessary.

2 SYSTEM CONFIGURATION

This unified ON/OFF controller enables individual and unified ON/OFF for a maximum of 16 groups of indoor units. With 2 to 8 unified ON/OFF controllers, individual and unified control is possible with up to a maximum 128 groups of indoor units.

■ **When using 1 unified ON/OFF controller**

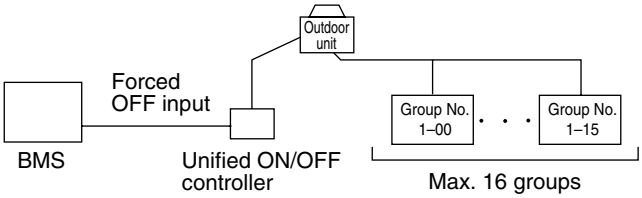

■ **When using 2 to 8 unified ON/OFF controllers**

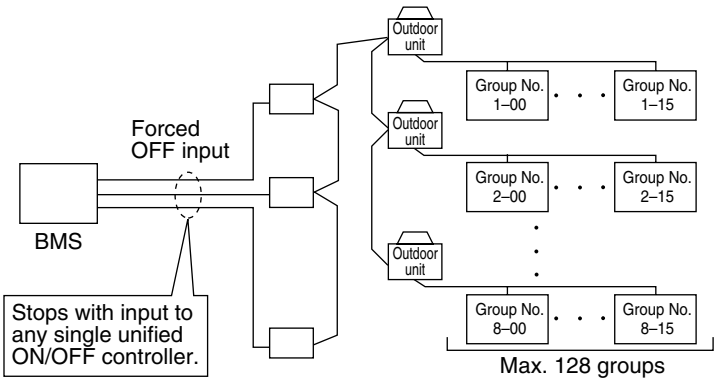

(This optional accessory can not be used in conjunction with wiring adaptor for electrical appendices (optional accessory).)

The groups of indoor units are as follows:

1. One indoor unit without remote controller

Without remote controller

2. One indoor unit controlled by one or two remote controllers

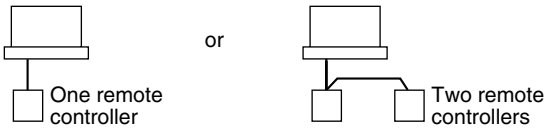

3. A maximum of 16 indoor units controlled in groups by one or two remote controllers

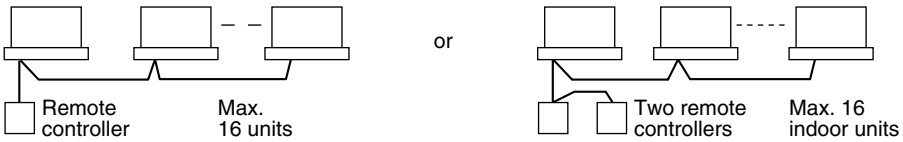

1P162827A

3 ELECTRIC WIRING

GENERAL INSTRUCTIONS

- All wiring, components and materials to be procured on the site must comply with the applicable local and national codes.
- Use copper conductors only.
- All field wiring and components must be provided by licensed electrician.
- Unit shall be grounded in compliance with the applicable local and national codes.
- Fit the power supply wiring with a fuse and a switch.
- After wiring work, check power to the equipment shuts OFF when switch is shut OFF.

WIRING OUTLINE

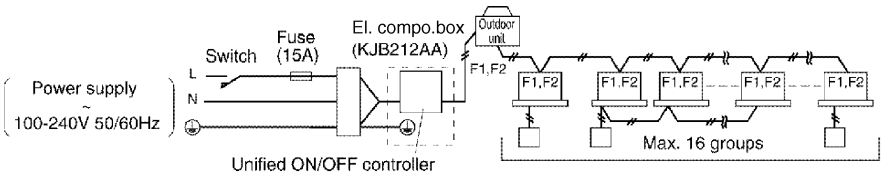

Wiring specification

	Type	Size
Power supply wiring	H05VV-U3G	(NOTE 1)
Transmission wiring	Sheathed wire (2 wire) (NOTE 2)	0.75 – 1.25mm²

NOTES) 1. The size of power supply wiring must comply with the applicable local and national codes.
2. Allowable length of transmission wiring is as follows. Max. 1000m (Total wiring length: 2000m)

Connect the wiring between indoor and outdoor units, indoor/outdoor units and power supply, and indoor units and remote controllers. For details, refer to the installation manuals of indoor and outdoor units.

1P162827A

EXAMPLES OF WIRING FOR TRANSMISSION

Series wiring

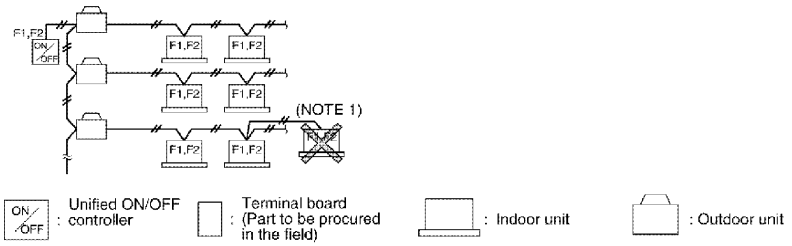

NOTES) 1. No branching is allowed after first branching.
2. Use a relay terminal board (part to be procured in the field) to branch more than 3 control wirings from the same terminal board.

WIRING TO THE INDOOR UNIT AND OUTDOOR UNIT

CONTROL TERMINAL STRIP

*1 For connecting indoor unit (F1, F2)
*2 Forced OFF input (T1, T2)
While the forced OFF input (no voltage contactor, for micro current) is ON (energized), all the connected indoor units are stopped and can not be operated.
Use only contactors which guarantee the minimum applicable load DC16V, 10mA.

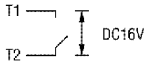

NOTE) Use instantaneous contactor of over 200msec. energizing time, when necessary.

*3 For schedule timer (D1, D2)
Power can be supplied to the schedule timer (DST301BA51•61 optional accessory). For details, refer to the installation manual of the schedule timer.
Wire *2 and *3 only when necessary.

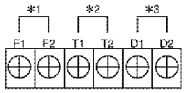

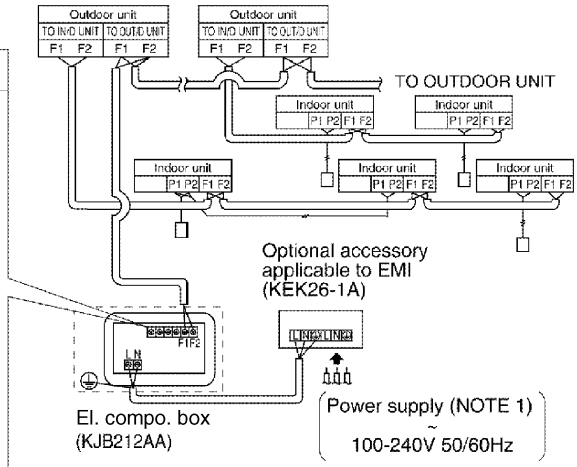

NOTE) 1. When not using the optional accessory applicable to EMI (KEK26-1A), connect the power supply wiring directly to the unified ON/OFF controller.

(NOTE)
Do not connect the power supply wiring (220 to 240V) to the control terminal strip. If connected by mistake, it may damage or burn electrical parts of optional controllers for centralized control and indoor unit. It may result in serious danger. Be sure to check wirings before turning the power ON.

1P162827A

4 INSTALLATION

① Open the upper part of remote controller.
Insert a ⊖ screwdriver (2 locations) into the recess between the upper part and the lower part of remote controller and twist the screwdriver lightly.

PC board is attached with both the upper and lower part of remote controller. Do not damage the board with the screwdriver.

② Open the upper part of remote controller and install the electric parts box (part to be procured in the field) with the attached installation screws (M4 × 16).

NOTE) Suitable length of the electric wire is about 160mm from the inlet of the el. compo. box. If it is difficult to contain a long wiring, strip the sheathed part of the wiring.

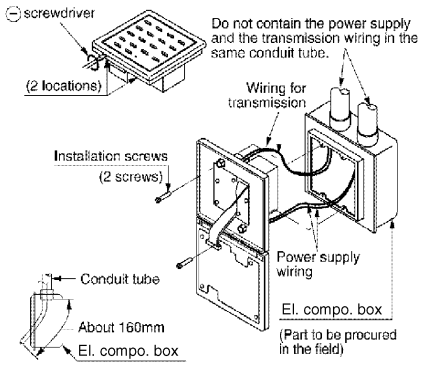

5 INITIAL SETTING

Setting ① through ③ are initialized when power is turned ON, therefore complete settings BEFORE activating the power.

① Connector for setting main controller (X1A) (Provided with connector at factory set)
- When using 1 unified ON/OFF controller, do not disconnect the connector for setting master controller. (Use the unit with the connector in the state in which it was delivered.)
- When using multiple unified ON/OFF controllers, or using the unified ON/OFF controller in conjunction with other optional controllers for centralized control, makes settings as indicated in the below table.

1P162827A

Pattern of connection of optional controllers for centralized control			Connector for setting master controller (X1A) Settings		
Unified ON/OFF controller	Central remote controller	Schedule timer	Unified ON/OFF controller	Central remote controller	Schedule timer
1 to 16			Set one to "Used" and all the rest to "Not used".		
	1 to 4		Set all to "Not used".	(Note)	
		1	Set one to "Used" and all the rest to "Not used".		"Not used"
	1 to 4	1	Set all to "Not used".	(Note)	"Not used"

(Note) For instructions on how to set the connector for setting master controller on the central remote controller, see the installation manual provided with the central remote controller.

② Switch for setting each address (DS1)
These switches are used to set group control address.
Groups Nos. 1–00 through 1–15 are grouped in the same control group when the unit is shipped from the factory.

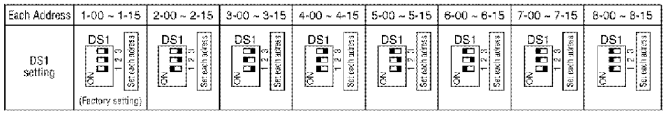

After setting, attach the number seal applicable to respective control range of the attached switch display sticker, as shown in the diagram below.

(Example)
In the case of 1-00 to 1-15, attach 1 .

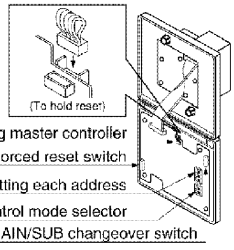

③ MAIN/SUB changeover switch setting
With two unified ON/OFF controllers, centralized control (indoor units) is possible from different locations. In this kind of set-up, it is necessary to set the MAIN/SUB changeover switch.

One of the two unified ON/OFF controllers (1)·(2) is set to "MAIN" while the other is set to "SUB".

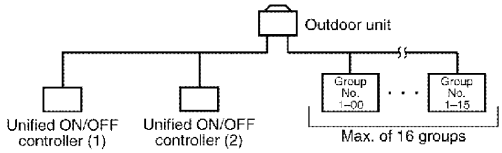

④ Setting of the sequential operation function
The unified ON/OFF controller is equipped with a sequential operation function that sequentially turns indoor units on in 2-second intervals during unified operation. (Sequential operation is factory set to "ON.") To switch sequential operation ON or OFF, set as follows.

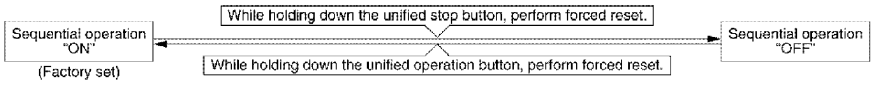

NOTE: The sequential operation function is designed to reduce the load on the power supply equipment, but does not guarantee that compressors will not be started simultaneously. You cannot therefore count on a capacity reduction effect by power supply equipment breaker selection.

⑤ Control mode selector (DS2)
The following four patterns of control mode can be set.

Control mode	Individual	Centralized	Timer operation possible by remote controller	ON/OFF control impossible by remote controller
Content	Operation/stop is controlled by both unified ON/OFF controller and remote controller.	After operated by unified ON/OFF controller, operation/stop is freely controlled by remote controller until stopped by unified ON/OFF controller.	When used in conjunction with schedule timer, operation/stop is controlled freely by remote controller during the set time but operation is not available when schedule timer is ON.	Operation/stop is controlled by unified ON/OFF controller only. (This unit can not be operated/stopped by remote controller.)
DS2 setting	(Factory set) DS2 ON 1 2 CONTROL MODE	DS2 ON 1 2 CONTROL MODE	DS2 ON 1 2 CONTROL MODE	DS2 ON 1 2 CONTROL MODE

NOTES)
- ■ indicates the position of switches.
- Set control mode before turning power supply ON.
- When used in conjunction with central remote controller, the control modes of the central remote controller has the priority.

⑥ Forced reset switch (SS1)
When changing the setting of the connector for setting master controller, etc., you can reset simply by setting it to the reset side once and returning to the normal side, without turning the power OFF.
(For normal operation, set the switch to the normal side.)

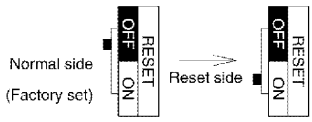

1P162827A

6 SETTING GROUP NO. FOR CENTRALIZED CONTROL

Set the group number of each group of the indoor unit from the remote controller. (In case of no remote controller, also connect the remote controller and set the group No. Then, remove the remote controller.)

(1) Turn ON the power of the indoor unit and UNIFIED ON/OFF CONTROLLER.
(Unless the power is ON, no setting can be made.)
Check that the installation and electrical wiring are correct before turning the power supply ON.
(When the power supply is turned ON, all LCD appear once and the unit may not accept the operation for about one minute with the display of "88".)

(2) While in the normal mode, hold down the " " button for a minimum of 4 seconds.
The remote controller will enter the FIELD SET MODE.

(3) Select the MODE No. "00" with the " " button.

(4) Use the " " button to select the group No. for each group.
(Group numbers increase in the order of 1-00,1-01,···1-15, 2-00, ···8-15.)

(5) Press " " to set the selected group No.

(6) Press " " to return to the NORMAL MODE.

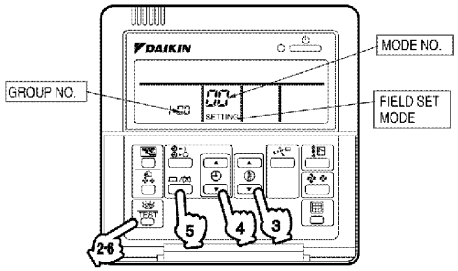

NOTES)
- For simplified remote controller, see the installation table.
- See the instruction manuals which came with the Ventiair and adapters (i.e., multi-purpose adapters) for details on their Group No. settings.

NOTICE
Enter the group No. and installation place of the indoor unit into the installation table in the operation manual.
Be sure to keep the operation manual for maintenance.

7 CONFIRMING OPERATION

Before starting test operation, supply power to the indoor units, outdoor units, and unified ON/OFF controller and press the ON/OFF button.
If the operation lamp flashes, it indicates a malfunction in the indoor unit of the applicable group.
If the display of " HOST " flashes, it indicates a malfunction in the optional controllers for centralized control. Check for such malfunctions.

NOTES
- For test operation of indoor and outdoor units, refer to the installation manual attached with the outdoor unit.
- After turning the power supply ON, if the unit does not accept operation for two minutes or more with the display of " HOST " flashing, check the following points.
  - Check that setting of the connector for setting master controller is correct.
  - Check that the group No. for centralized control has been set.

1P162827A

19. Noise Filter (For Electromagnetic Interface Use only)

19.1 KEK26-1A

1 COMPONENTS

- Check the following components are included in this optional accessory before installation.

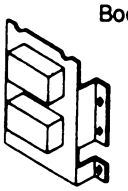 Body	Installation screw	4
	Clamp	2
	Relay harness	1
	Installation manual	2

- Store this optional accessory in the control box.
- When supplying a control box at site, prepare a control box whose dimensions are equal to or larger than the figures shown below.
  Wide x Height x Depth = 136 x 117 x 44 mm

2 SYSTEM CONFIGURATION

- **When connecting this optional accessory to the unified ON/OFF controller for VRV series, it is applicable to EMC (Electromagnetic Compatibility) (European Directive).**

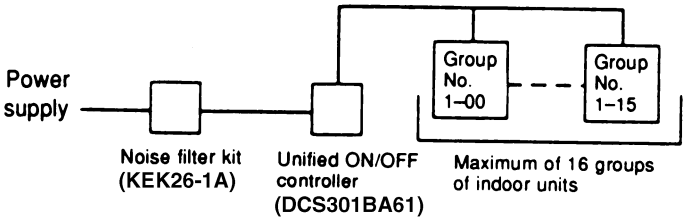

The groups of indoor units are as follows:

① One indoor unit without remote controller

Without remote controller

② One indoor unit controlled by one or two remote controllers

One remote controller

or

Two remote controllers

③ A maximum of 16 indoor units controlled in groups by one or two remote controllers

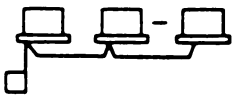

One remote controller
Max. 16 units

or

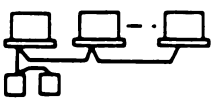

Two remote controllers
Max. 16 indoor units

C: 2PA54937C

3 ELECTRIC WIRING

GENERAL INSTRUCTIONS

- All wiring, components and materials to be procured on the site must comply with the applicable local and national codes.
- Use copper conductors only.
- All wiring and components must be provided by licensed electrician.
- Unit shall be grounded in compliance with the applicable local and national codes.
- Fit the power supply wiring with a fuse and a switch.
- Before wiring work, turn the switch OFF and confirm that power to the equipment shuts OFF.

〈 Wiring specification 〉

	Type	Size
Power supply wiring	H05VV-U3G	(NOTE 1)
Transmission wiring	(NOTE 2)	0.75–1.25mm^2

NOTE) 1. The size of power supply wiring must comply with the applicable national and local codes.
2. Transmission wiring must comply with the condition as follows:
① When indoor unit is H series. Use shield wire (2 wire).
② When indoor unit is G series. Use sheathed wire (2 wire).

- You may also use the sheathed wire if the above condition ① is satisfied, but remember that the sheathed wire fails to comply with EMC (Electromagnetic Compatibility) (European Directive).
- When using sheathed wire, EMC conforms to Japanese standards stipulated in the Electric Appliance Regulatory act.
- The grounding of transmission line as shown in the figure 1 is not required if the sheathed wire is used.

WIRING SPECIFICATION

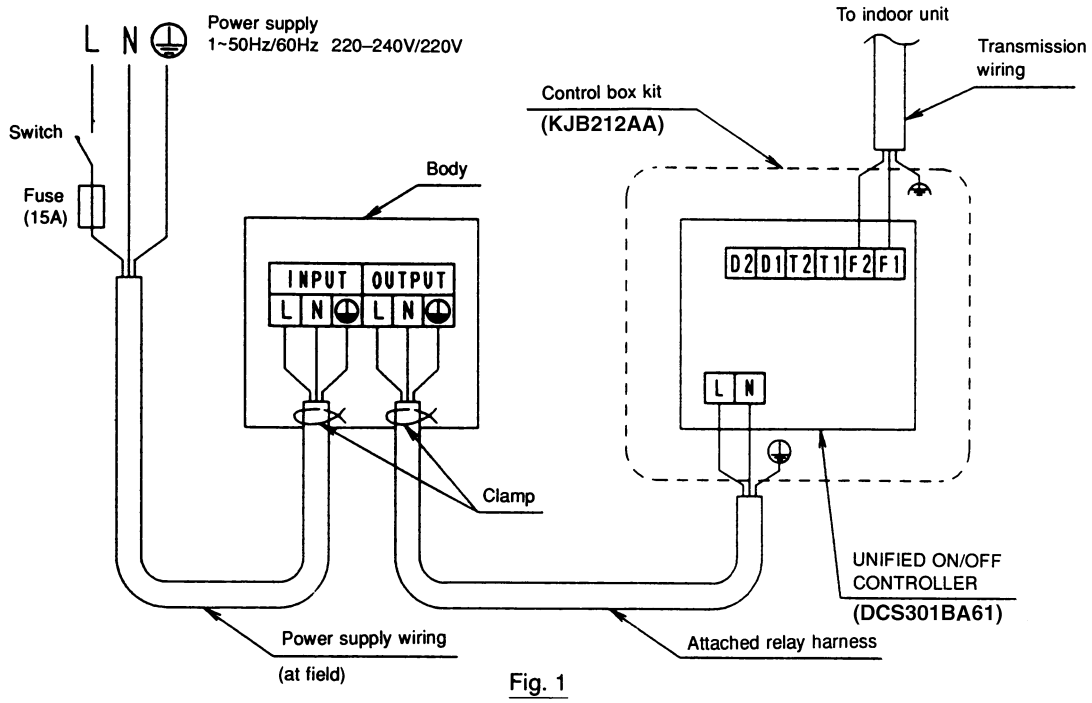

Fig. 1

NOTE

- Clamp the field supplied wirings with the body, using the attached tie wraps.

C: 2PA54937C

4 INSTALLATION

Install this optional accessory on the control box (field supplied part) with the attached installation screws.

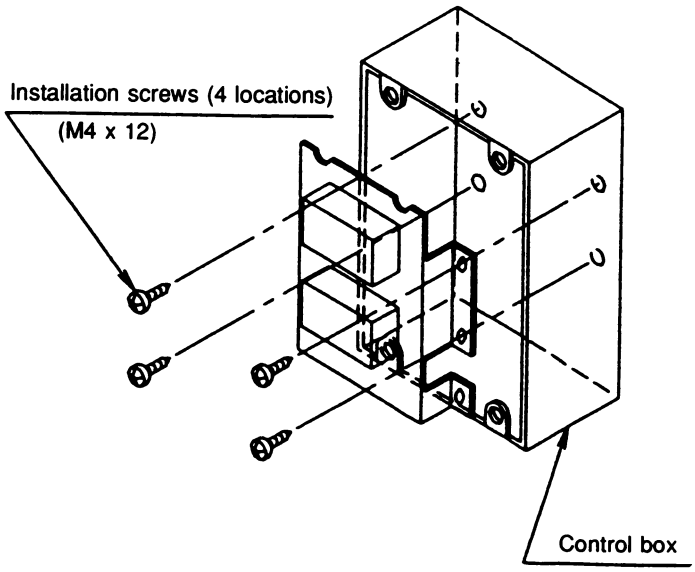

〈 Installation hole pitch 〉

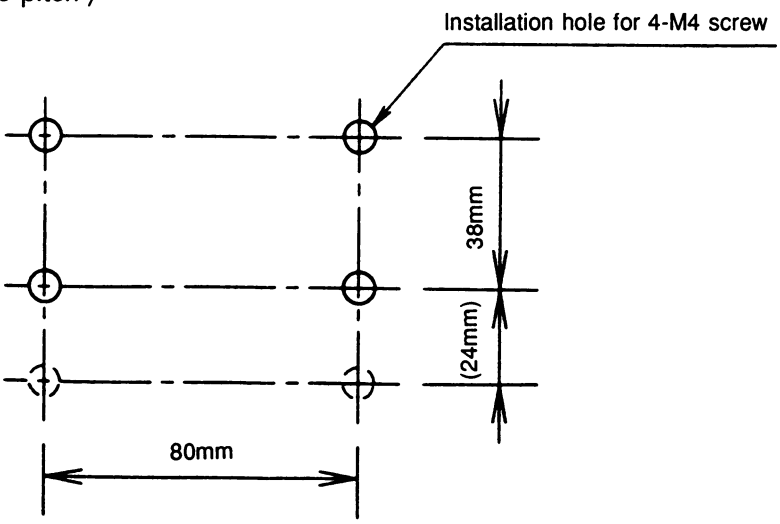

NOTE

- Lower 2 installation holes are reserves. Generally, use the upper 4 holes to install this optional accessory.

C: 2PA54937C

20. Schedule Timer

20.1 DST301BA61

20.1.1 Features

Enables you to connect and control weekly schedule for up to 128 indoor units all together.

- Simultaneous control of up to 128 indoor units is managed by a week schedule.
- The start and stop time for twice a day can be set for the week in increments of 1 minute.
- By combining with a central remote controller and schedule timer, you can construct a system that matches the size and use of the building.
- If used together with a central remote controller, you can set up to 8 schedule patterns which can be distributed among zones as desired using the central remote controller.
- Is equipped with a compensation function for power failure up to 48 hours.
- Features thin design of a mere 16 mm in thickness. (Use of the optional JIS 2-block wall embedded box (KJB212AA))
- Can be used in combination with other D-BACS equipment.

20.1.2 Dimensions

Unit (mm)

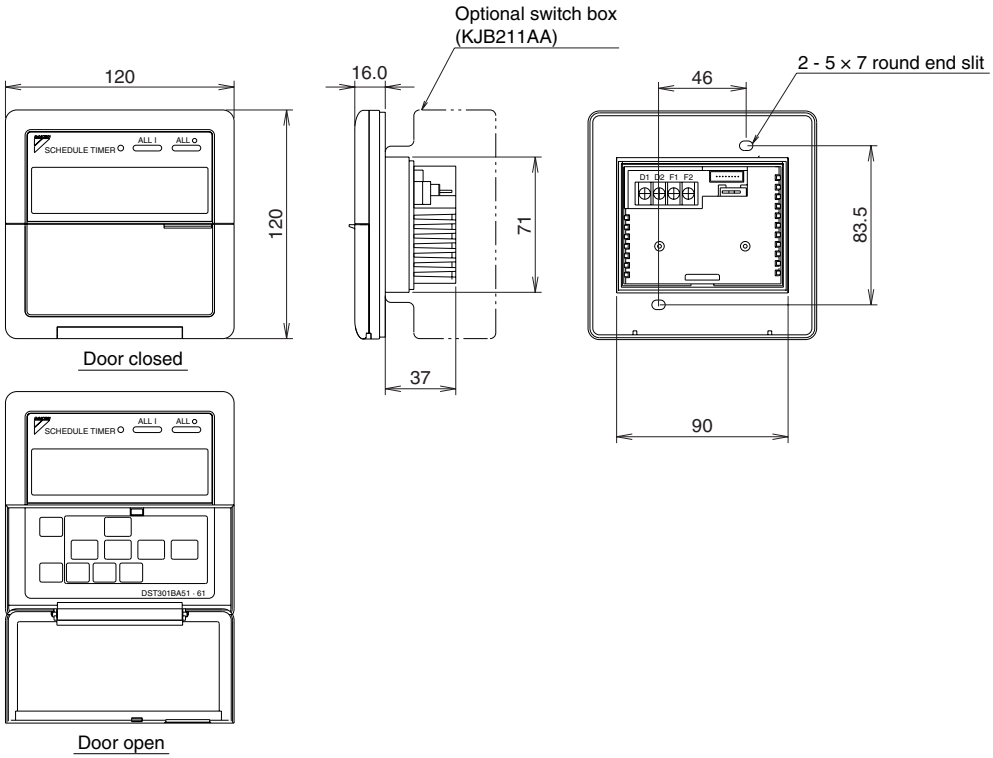

C: 3D049544

20.1.3 Operation Manual

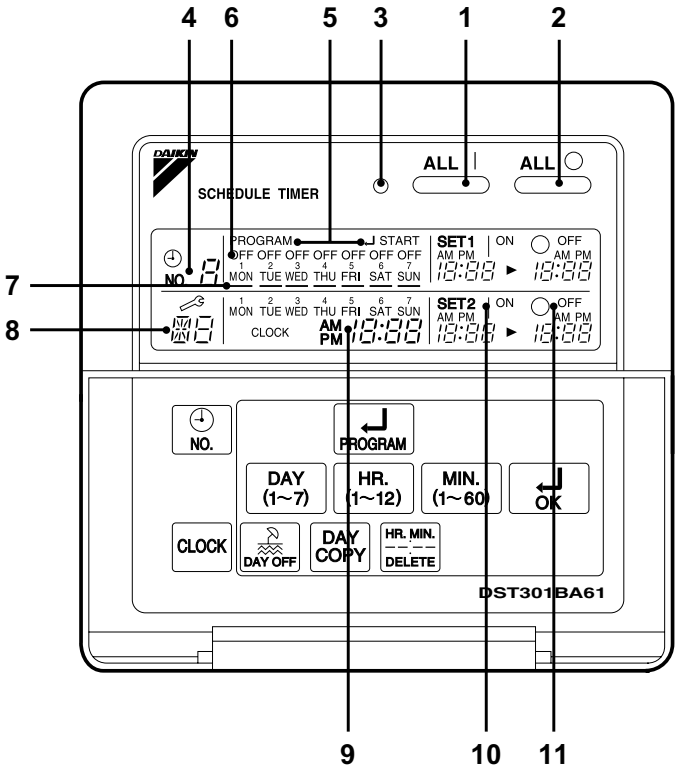

1

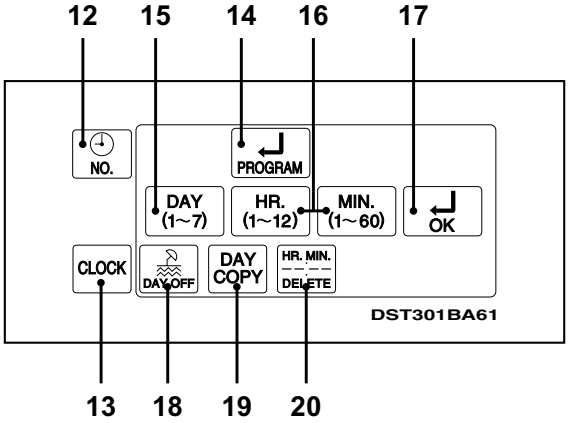

2

3P124623-5C

2

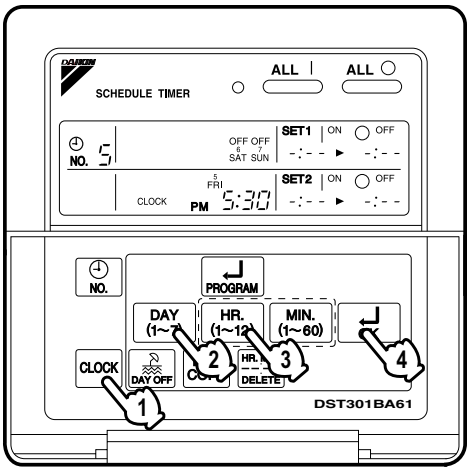

3

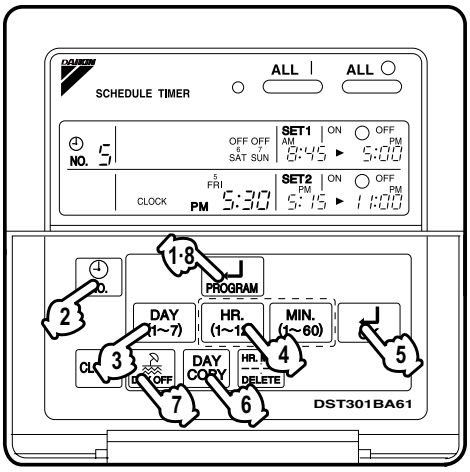

4

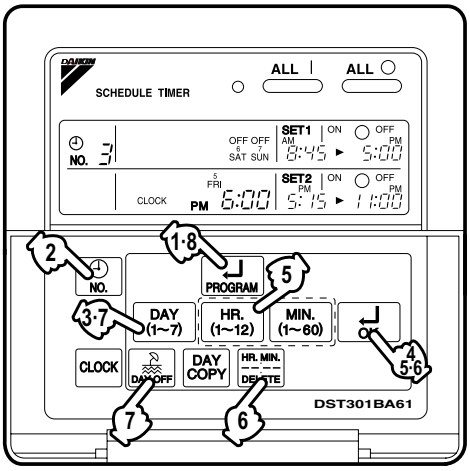

5

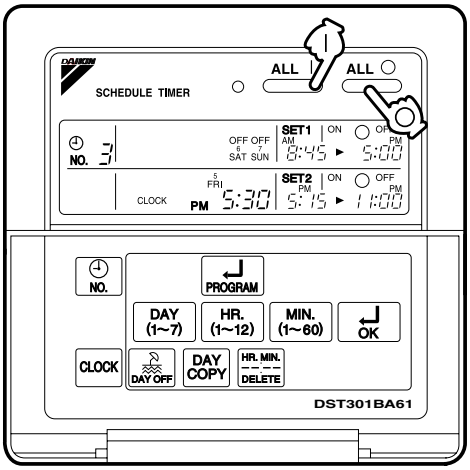

6

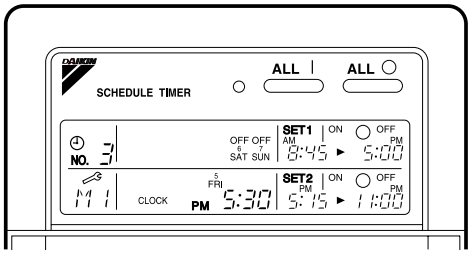

7

3P124623-5C

SAFETY CONSIDERATIONS

Please read these " SAFETY CONSIDERATIONS " carefully before installing air conditioning equipment and be sure to install it correctly.
After completing the installation, make sure that the unit operates properly during the start-up operation.
Please instruct the customer on how to operate the unit and keep it maintained.
Also, inform customers that they should store this installation manual along with the operation manual for future reference.
This air conditioner comes under the term " appliances not accessible to the general public ".

Meaning of warning, caution and note symbols.

⚠ **WARNING**..... Indicates a potentially hazardous situation which, if not avoided, could result in death or serious injury.

⚠ **CAUTION**..... Indicates a potentially hazardous situation which, if not avoided, may result in minor or moderate injury. It may also be used to alert against unsafe practices.

⚠ **NOTE** ..... Indicates situation that may result in equipment or property-damage-only accidents.

Keep these warning sheets handy so that you can refer to them if needed.
Also, if this equipment is transferred to a new user, make sure to hand over this operation manual to the new user.

⚠ WARNING

In order to avoid electric shock, fire or injury, or if you detect any abnormality such as smell of fire, turn off power and call your dealer for instructions.

Ask your dealer for installation of the air conditioner.
Incomplete installation performed by yourself may result in a water leakage, electric shock, and fire.

Ask your dealer for improvement, repair, and maintenance.
Incomplete improvement, repair, and maintenance may result in a water leakage, electric shock, and fire.

Improper installation or attachment of equipment or accessories could result in electric shock, short-circuit, leaks, fire or other damage to the equipment. Be sure only to use accessories made by Daikin which are specifically designed for use with the equipment and have them installed by a professional.

Ask your dealer to move and reinstall the air conditioner or the remote controller.
Incomplete installation may result in a water leakage, electric shock, and fire.

Never let the indoor unit or the remote controller get wet.
It may cause an electric shock or a fire.

Never use flammable spray such as hair spray, lacquer or paint near the unit.
It may cause a fire.

Never replace a fuse with that of wrong ampere ratings or other wires when a fuse blows out.
Use of wire or copper wire may cause the unit to break down or cause a fire.

Never inspect or service the unit by yourself.
Ask a qualified service person to perform this work.

Cut off all electric waves before maintenance.

Do not wash the air conditioner or the remote controller with excessive water.
Electric shock or fire may result.

Do not install the air conditioner or the remote controller at any place where flammable gas may leak out.
If the gas leaks out and stays around the air conditioner, a fire may break out.

Do not touch the switch with wet fingers.
Touching a switch with wet fingers can cause electric shock.

CISPR 22 Class A Warning:
This is a class A product. In a domestic environment this product may cause radio interference in which case the user may be required to take adequate measures.

⚠ CAUTION

After a long use, check the unit stand and fitting for damage.
If they are left in a damaged condition, the unit may fall and result in injury.

Do not allow a child to mount on the unit or avoid placing any object on it.
Falling or tumbling may result in injury.

Do not let children play on and around the unit.
If they touch the unit carelessly, it may result in injury.

Do not place a flower vase and anything containing water.
Water may enter the unit, causing an electric shock or fire.

Never touch the internal parts of the controller.
Do not remove the front panel. Some parts inside are dangerous to touch, and a machine trouble may happen.
For checking and adjusting the internal parts, contact your dealer.

Avoid placing the controller in a spot splashed with water.
Water coming inside the machine may cause an electric leak or may damage the internal electronic parts.

Do not operate the air conditioner when using a room fumigation - type insecticide.
Failure to observe could cause the chemicals to become deposited in the unit, which could endanger the health of those who are hypersensitive to chemicals.

Safely dispose of the packing materials.
Packing materials, such as nails and other metal or wooden parts, may cause stabs or other injuries.
Tear apart and throw away plastic packaging bags so that children will not play with them. If children play with a plastic bag which was not torn apart, they face the risk of suffocation.

Do not turn off the power immediately after stopping operation.
Always wait at least five minutes before turning off the power. Otherwise, water leakage and trouble may occur.

The appliance is not intended for use by young children or infirm persons without supervision.

The remote controller should be installed in such away that children cannot play with it.

⚠ NOTE

Never press the button of the remote controller with a hard, pointed object.
The remote controller may be damaged.

Never pull or twist the electric wire of the remote controller.
It may cause the unit to malfunction.

Do not place the controller exposed to direct sunlight.
The LCD display may get discolored, failing to display the data.

Do not wipe the controller operation panel with benzine, thinner, chemical dustcloth, etc.
The panel may get discolored or the coating peeled off. If it is heavily dirty, soak a cloth in water-diluted neutral detergent, squeeze it well and wipe the panel clean. And wipe it with another dry cloth.

Dismantling of the unit, treatment of the refrigerant, oil and eventual other parts, should be done in accordance with the relevant local and national regulations.

CONTENTS

SAFETY CONSIDERATIONS.....1
FEATURES AND FUNCTIONS.....3
NAMES AND FUNCTIONS OF OPERATING SECTION.....4
OPERATION.....5
Setting present time.....5
Setting no. of programmed time.....6
Change and cancellation of no. of programmed time.....7
Manual operation.....9
Operation control code.....9
Error diagnosing function.....9
QUESTION AND ANSWER.....10
SPECIFICATIONS.....12
Specifications.....12
Outline drawings.....12

FEATURES AND FUNCTIONS

■ **Operation controlled by programmed time**
Operating time and stopping time can be set to the minute by each day of the week. The operating and stopping patterns can also be set in schedule according to the time slot given twice a day in tune with the uses.

See page 5—9.

■ **Unified Operation/Stop**
By using this schedule timer, the unified operation/stop of the indoor unit can be executed manually regardless of the No. of programmed time in operation.

See page 9.

- **When used in conjunction with central remote controller (Optional Accessory)**
  The operation controlled by programmed time can be set for up to eight different patterns (timer No. 1 – 8). Each schedule pattern can be also selected.

2

NAMES AND FUNCTIONS OF OPERATING SECTION (Fig. 1, 2)

1	**UNIFIED OPERATION BUTTON " ALL " **
	Press this button to perform the unified operation regardless of the No. of programmed time.
2	**UNIFIED STOP BUTTON " ALL " **
	Press this button to perform the unified stop regardless of the No. of programmed time.
3	**OPERATION LAMP (RED)**
	The light turns on during the operation of the indoor unit.
4	**DISPLAY " NO. 8 " (TIME NO.)**
	Displays the time No. only when used in conjunction with the central remote controller.
5	**DISPLAY "PROGRAM ↵ START." (PROGRAMMING START)**
	The light turns on when the timer is programmed.
6	**DISPLAY " OFF " (HOLIDAY SETTING)**
	Lights above the day of the week set as holiday. The operation controlled by timer is not available on that day.
7	**DISPLAY " — " (SETTING OF DAYS OF A WEEK)**
	Flashes below the day of the week programmed.
8	**DISPLAY " 00 " (MALFUNCTION CODE)**
	Displays the contents of malfunction during the stop due to malfunction.

9	**DISPLAY " 1 MON 2 TUE 3 WED 4 THU 5 FRI 6 SAT 7 SUN CLOCK AM PM 10:00 " (PRESENT TIME)**
	Displays the present day of the week and time.
10	**DISPLAY " AM PM ON 10:00 " (PROGRAMMED TIME OF SYSTEM START)**
	Displays the time programmed to start.
11	**DISPLAY " OFF AM PM 10:00 " (PROGRAMMED TIME OF SYSTEM OFF)**
	Displays the time programmed to stop.
12	**TIME NO. BUTTON " NO. "**
	See page 5–9.
13	**CLOCK ADJUSTING BUTTON " CLOCK "**
	Press this button to set the present time.
14	**PROGRAMMING START BUTTON " ↵ PROGRAM "**
	Press this button to set or check the No. of programmed time. Press it again after you are through with the program.
15	**BUTTON FOR SELECTING DAYS OF A WEEK " DAY (1~7) "**
	Press this button to select the day of the week.
16	**HOUR/MINUTE BUTTON " HR. (1~12) MIN. (1~60) "**
	Press this button to adjust the present time and the programmed time.

17	**TIMER ON BUTTON “ OK ”**
	Press this button to set the present time and the programmed time.
18	**HOLIDAY SETTING BUTTON “ DAY OFF ”**
	Press this button to set holidays.
19	**BUTTON FOR COPYING PROGRAM OF PREVIOUS DAY “ DAY COPY ”**
	Use this button to set the No. of programmed time same as that of the previous day.
20	**PROGRAM CANCELING BUTTON “ HR. MIN. DELETE ”**
	Use this button to set the programmed time to cancel. The display shows “ – ; – – ”.
(Note) 1. Please note that all the displays in the figure appear for explanation purpose or when the cover is open.	

OPERATION

■ Setting present time (Fig. 3)

(Example) In case of setting Friday, 5:30 p.m.

1. **Press the CLOCK ADJUSTING BUTTON. The present time display flashes.**

   (NOTE)
   - The present time needs adjusting in case of turning power supply on for the first time or the occurrence of power failure over the period of 48 hours or more.

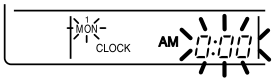

2. **Press the BUTTON FOR SELECTING DAYS OF A WEEK. Each time the button is pressed, the day display shifts to the right.**

   (NOTE)
   - The display “ MON ” follows the display “ SUN. ”

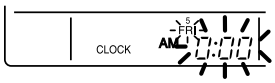

Set the day to Friday.

3. **Set the time with the HOUR/MINUTE BUTTON. Each time the HOUR/MINUTE BUTTON is pressed, the display is put forward minute by minute and hour by hour. When the button is kept pressed, the display is put forward continuously.**

   (NOTES)
   - After becoming “ AM 11:00 ”, when the button is pressed, the display becomes “ PM 0:00 ”.
   - After becoming “ 59 ” (minute), when the button is pressed, the display becomes “ 00 ” (minute).

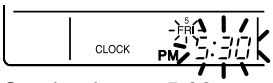

Set the time to 5:30 p.m.

4. **Press the TIMER ON BUTTON the moment the time signal of TV, radio, telephone, etc. is heard. The mark “ : ” flashes, and the clock starts.**

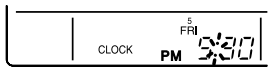

Press the TIMER ON BUTTON in tune with the time signal at 5:30 p.m.

(NOTES)
- The clock used is of 12-hour type.
- When you turn power supply on, the system may display “ 88 ” for about one minute and not start to operate after all the liquid crystal displays appear at a time.
- If the CLOCK ADJUSTING BUTTON is pressed by mistake, press it again to return to the original state. As the clock does not stop, the time indicated by the clock is kept correct. In case of power failure within 48 hours, the clock keeps operating by utilizing the built-in battery.

■ Setting no. of programmed time (Fig. 4)

(Example) **Time No. 5 (to be programmed only when used in conjunction with the central remote controller)**

Monday to Friday:
Operating from 8:45 a.m. till 5:00 p.m.
Operating from 5:15 p.m. till 11:00 p.m.

Saturday and Sunday:
Setting the whole day stop operation (application for holidays) controlled by programmed time.

1. Press the PROGRAMMING START BUTTON. Programming is available.
The display " PROGRAM ↵START " appears, and the display of days of a week flashes.

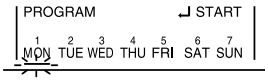

2. Press the TIME No. BUTTON, and select the desired number.

(NOTE)
- Unless used in conjunction with the central remote controller, The TIME No. is not displayed and can not be selected.

Select the TIME No. 5.

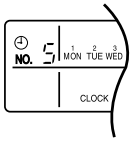

3. Press the BUTTON FOR SELECTING DAYS OF A WEEK, and set the proper day of the week. Each time you press it, the flashing display of days of a week shifts to the right.

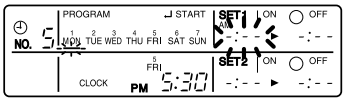

Set to Monday.

(1) Setting programmed time

4. Set the programmed time of system start 1 by using the HOUR/MINUTE BUTTON. Each time the HOUR/MINUTE BUTTON is pressed, the display is put forward minute by minute and hour by hour. When the button is kept pressed, the display is put forward continuously.

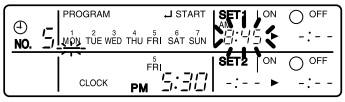

Set the "PROGRAMMED TIME OF SYSTEM START 1" at 8:45 a.m.

5. Press the TIMER ON BUTTON, and set the programmed time of system start 1. Each time you press it, the next area to be set flashes.

(NOTE)
- Set the other programmed time in the same procedure.

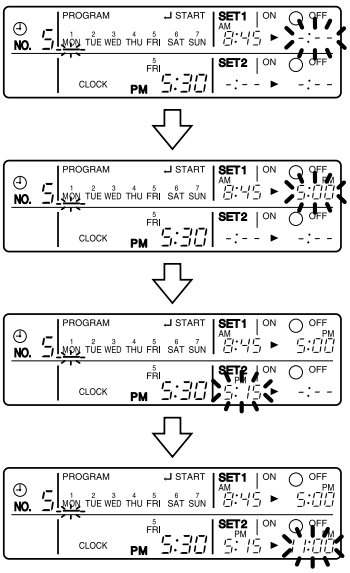

(2) Set the next day of the week.
Set the day of the week to Tuesday, and copy the program of the previous day (Monday). In the same procedure, set the day of the week to Wednesday through Friday in sequence.

6. Press the BUTTON FOR SELECTING DAYS OF A WEEK and set the following day. Press the BUTTON FOR COPYING PROGRAM OF PREVIOUS DAY. The same program as that of the immediately preceding day of the week is set.

(NOTE)
- Repeat each procedure 3 – 5 in the above when not copying the contents of the previous day.

(3) Holiday setting

7. Press the BUTTON FOR SELECTING DAYS OF A WEEK and set one or more days of the week as holiday. Press the HOLIDAY SETTING BUTTON, and the display " OFF " is displayed at the top of the day of the week. If you press it again, the display returns to the original state.

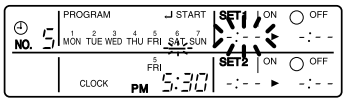

Set Saturday and Sunday as holidays.

8. Press the PROGRAMMING START BUTTON, and finish the program setting.

(NOTES)
- Unless the button is pressed within 20 minutes, the display will automatically revert back to the original state. In this case, setting contents up to the point where the TIMER ON BUTTON (or HOLIDAY SETTING BUTTON or BUTTON FOR COPYING PROGRAM OF PREVIOUS DAY) is pressed will only take effect.
- The display " PROGRAM START " and the display of days of a week " — " disappears.
- The flashing display goes off, and the No. of programmed time of the present day is displayed. Then the operation controlled by timer starts.
- The operation controlled by timer is executed even while the program is being set.

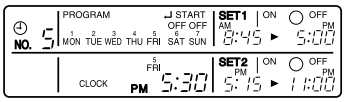

This is the end of the setting example.

■ Change and cancellation of no. of programmed time (Fig. 5)

(Example) Time No. 3 (to be set only when used in conjunction with the central remote controller)

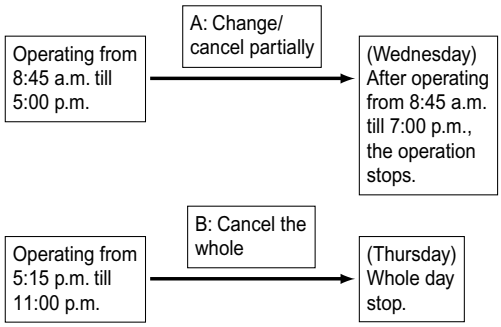

1. Press the PROGRAMMING START BUTTON. The program setting is ready. The display " PROGRAM START " appears, and the display of days of a week flashes.

2. Press the TIME No. BUTTON, and select the desired No.

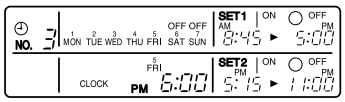

Select the time No. 3.

3. Press the BUTTON FOR SELECTING DAYS OF A WEEK, and set the day of the week to be changed. The set No. of programmed time of the day of the week is displayed.

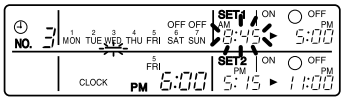

Set the day to Wednesday.

A. Change/cancel partially

4. Press the TIMER ON BUTTON and change, and the display of programmed time flashes. Each time you press it, the next area to be set flashes.

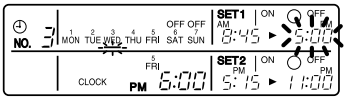

Shift to the display “PROGRAMMED TIME OF SYSTEM OFF 1”.

5. Press the HOUR/MINUTE BUTTON and change the programmed time. Press the TIMER ON BUTTON, and finalize the setting of change.

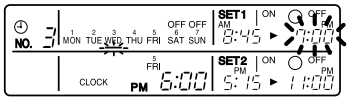

Change the “PROGRAMMED TIME OF SYSTEM OFF 1” to 7:00 p.m.

6. Press the PROGRAM CANCELING BUTTON, and cancel the programmed time. If you press it again, display returns to the original state. Press the TIMER ON BUTTON to finalize the cancellation.

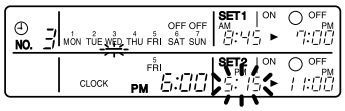

Shift to the “PROGRAMMED TIME OF SYSTEM START 2”.

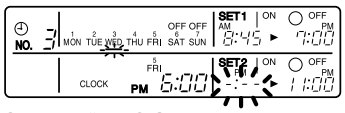

Set the “PROGRAMMED TIME OF SYSTEM START 2” to program cancellation.

In the same procedure, cancel the programmed time of system off 2.

B. Cancel the whole

7. Press the BUTTON FOR SELECTING DAYS OF A WEEK, and shift to the day of the week to be canceled. Then, press the HOLIDAY SETTING BUTTON, the display “ OFF ” appears at the top of the particular day of the week. The programmed time is canceled. If you press the button again, the display returns to the original state.

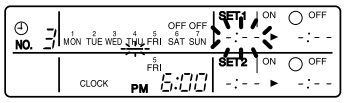

Shift the day of the week to Thursday to set as a holiday.

8. ☞ **Press the PROGRAMMING START BUTTON. The program setting is now finished.**

(NOTES)
- Unless the button is pressed within 20 minutes, the display will automatically revert back to the original state. In this case, setting contents to the point where the TIMER ON BUTTON (or HOLIDAY SETTING BUTTON or BUTTON FOR COPYING PROGRAM OF PREVIOUS DAY) is pressed will only take effect.
- To continue the change/cancellation, do not press the PROGRAMMING START BUTTON until all change/cancellation are completed.
- The operation controlled by timer is executed even while the program is being set.

■ Manual operation (Fig. 6)

This schedule timer enables the operation/stop by pressing the UNIFIED OPERATION/STOP BUTTON in addition to the operation controlled by timer (operation/stop according to the programmed time) at any time.

1. ☞ **Press the UNIFIED OPERATION BUTTON, and the OPERATION LAMP turns on.**

2. ☞ **Press the UNIFIED STOP BUTTON, and the OPERATION LAMP is turned off.**

(NOTES)
- The operation automatically stops according to the programmed time of system off even during the manual operation. In the meantime, the operation starts automatically according to the programmed time of system start even during the stop of operation.
- If the unit is used in conjunction with other optional controllers for centralized control, the OPERATION LAMP of the unit that is not under operation control may be turned on or off a few minutes behind schedule. This shows that the signal is being exchanged, and does not indicate any failure.

Operation lamp	
○ Turn on:	The light turns on when any of the indoor units is in operation whether the operation is controlled by timer or by hand.
● Turn off:	The light turns off when all the indoor units stop.

■ Operation control code

Two different types of operation control codes can be selected when this kit is used independently (when not used in conjunction with the central remote controller, unified ON/OFF controller, etc.).

Individual

In case where the operation/stop is controlled by both schedule timer and remote controller.

Centralized

The operation is controlled by the schedule timer alone, and the operation/stop is controlled freely with the remote controller during the programmed time.

(NOTES)
- For current settings, contact your DAIKIN dealer.
- To change settings, contact your DAIKIN dealer.
  Do not change settings yourself.

■ Error diagnosing function (Fig. 7)

This schedule timer is provided with the malfunction diagnosing function. The malfunction code flashes if there occurs any malfunction in communication, etc. between and among the optional controllers for centralized control. In addition, the operation lamp also flashes if there occurs any malfunction in communication with the indoor unit. Check the contents of the display and contact your DAIKIN dealer because the signals give you the idea of the trouble area.

Operation lamp	Malfunction code	Contents of malfunction
Turn off	M1	Failure of PC board of schedule timer. **Fixes** The following causes are possible. Check each one. **1.** PC board problems
Turn on or off	M8	Malfunction of transmission between each optional controllers for centralized control. **Fixes** Check all central devices which are connected (e.g., power supply, transmission wiring, etc.).
Turn on or off	MA	Improper combination of optional controllers for centralized control. **Fixes** The following causes are possible. Check each one. **1.** Are all central devices combined correctly? **2.** Is the master central connector attached to two or more central devices? **3.** Are there 128 or more indoor units connected?
Turn on or off	MC	Address failure of schedule timer. **Fixes** The following causes are possible. Check each one. **1.** Do the control range addresses in the central remote controller overlap? **2.** Do the control range addresses in the on/off controller overlap? **3.** Are there 2 or more schedule timers connected?
Flash	UE	Malfunction of transmission between indoor unit and optional controllers for centralized control. **Fixes** Inspect all indoor units which are displaying an error (e.g., power supply, transmission wiring, etc.).
Flash	—	Malfunction in indoor unit (Refer to the malfunction codes of the indoor remote controller, while also read the " CAUTION FOR SERVICING " attached to the indoor unit.)

QUESTION AND ANSWER

Question	Answer
It is possible to make settings twice a day, but is it possible to make only the " off " setting? (To avoid forgetting to turn the unit off.)	Yes. Press the PROGRAM CANCELING BUTTON in the " AM PM 12:00 ON " section in order to set it to " OFF ".

Is it possible to set times which straddle days?	Yes, it is possible. Example: Start operation at 5:00 a.m. on Sunday Stop operation at 6:00 p.m. on Monday 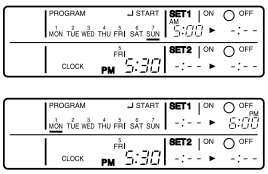
The unit does not turn on even though the set " on " time has come. (When using the schedule timer alone)	The following causes are possible. **1.** Are the " on " time and the " off " time set to the same time?
The unit does not turn on even though the set " on " time has come. (When using the unit with a central remote controller)	The following causes are possible. Check each one. **1.** Was the timer number set with the central remote controller? Was an incorrect timer number set? **2.** Is another timer no. set with the central remote controller set for " off " at the same time? **3.** Is the operation code set to " remote control permission timer " using the central remote controller or the on/off controller?
The unit operates even though that day is set as a holiday. (When using the unit with a central remote controller)	The following causes are possible. **1.** Is another timer number set with the central remote controller set for " on " at the same time? (If two timer numbers are set, make sure that the settings for holidays and working days do not overlap between the different timer numbers.)

The TIME NO. is not displayed.	The following causes are possible. **1.** The TIME NO. is not displayed when using the schedule timer alone. (It can be set if using the central remote controller at the same time.)
The display remains " " even though I push the HOUR/MINUTE BUTTON in the timer program settings.	The following causes are possible. **1.** Is the day set to a holiday?
I cannot set " central management priority " or " after-push priority " with the schedule timer.	The following causes are possible. **1.** Is a central remote controller or on/off controller also installed? ∗ **The priority order of the operation codes depends on the central devices which are installed.** The below operation codes are set. • Schedule timer Central remote controller is used as well Operation code of the central remote controller • Schedule timer On/off controller is used as well Operation code of the on/off controller • Schedule timer Central remote controller On/off controller is used as well Operation code of the central remote controller

SPECIFICATIONS

■ Specifications

Display of time	12-hour digital display
Clock cycle type	Quartz clock type
Clock accuracy	Within ±30 sec./month (environmental temperature from 15°C to 35°C)
Timer programming	Two pairs of programmed time for both system start and system off can be set in units of minute for each day of the week
Power failure compensation time	Approximately 48 hours for a single occurrence of power failure (clock with No. of programmed time)
Size	120 (W) × 120 (H) × 53 (D) mm (Width/Height/Depth)
Weight	Approximately 210g

■ Outline drawings

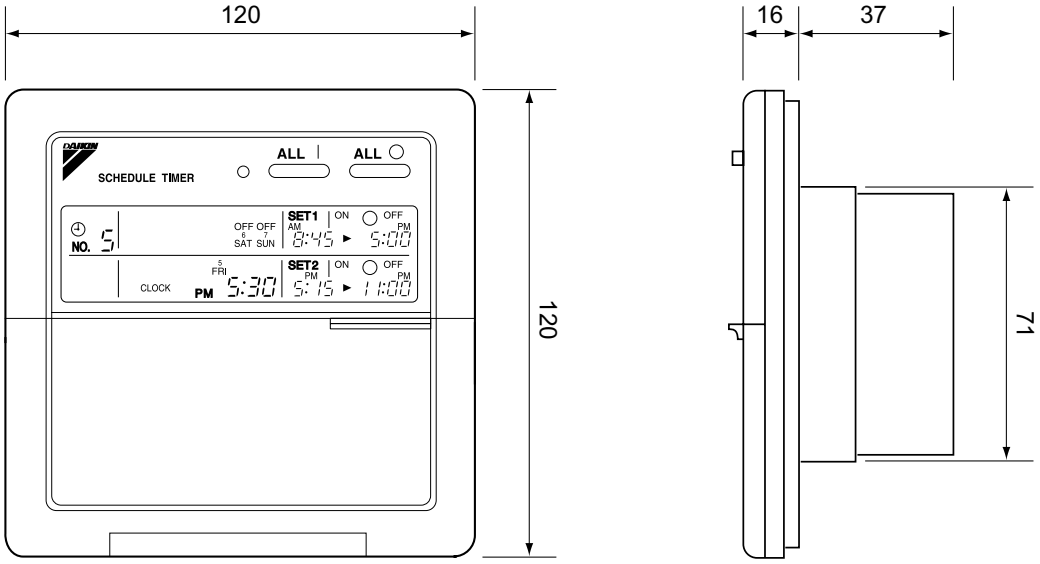

Specifications and appearance subject to change without notice.

20.1.4 Installation Manual

1 ACCESSORIES

Check the following accessories are included in the kit before installation.

Body	1	Installation screws (M4 × 16)	2
Operation manual	1	Attached electric wire (for individual use)	1
Installation manual*	4	Crimp style terminal (for individual use)	2

For Installation, a electrical box to be embedded is necessary (part to be procured in the field/with covers).
* DST301BA61 includes only one installation manual.

2 INSTALLATION AND INITIAL SETTING

1. Remove the upper part of the remote controller.

- Insert a (–) screwdriver (2 locations) into the recess between the upper part and the lower part of the remote controller and twist the screwdriver lightly.

  (The PC board is attached with the upper part of the remote controller. Do not damage electric parts with a screwdriver, etc.)

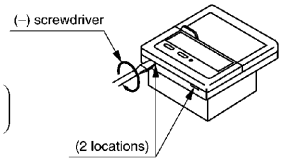

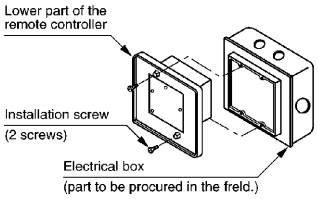

- Attach the lower part to the electrical box (part to be procured in the field) with the provided installation screws.

  (Select a flat face as a installation place. Do not tighten the installation screws excessively not to damage the lower part of the remote controller.)

  For part to be procured in the field electrical box, use KJB212AA (optional accessory).

2. Initial setting

① Setting connector for individual use (X1A) (Factory set : OFF) (Set for individual use only)
- For individual use of schedule timer
  Insert the connector attached with the body case on the PC board.
- For combined use with other optional controllers for centralized control
  Do not change the factory setting.

② Control mode selector (SS2) (Set for individual use only)
By changing the switch, setting mode of individual and centralized operation is available.
Note) When used with other optional controllers, control mode of central remote controller and unified ON/OFF controller have the priority.

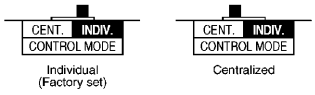

③ Setting of the sequential operation function
The schedule timer is equipped with a sequential operation function that sequentially turns indoor units on in 2-second intervals during unified operation.
(Sequential operation is factory set to "ON.")
To switch sequential operation ON or OFF, set as follows.

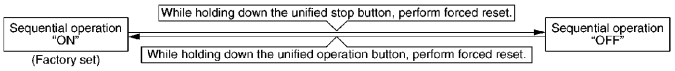

Note) The sequential operation function is designed to reduce the load on the power supply equipment, but does not quarantee that compressors will not be started simultaneously. You cannot therefore count on a capacity reduction effect by power supply equipment breaker selection.

④ Forced reset switch (SS1)
When changing the setting of the connector for individual use, etc., the switch can be reset simply by setting it to the reset side once and returning to the normal side. This procedure enables to reset without turning off the power. (Set the normal side at normal operation.)

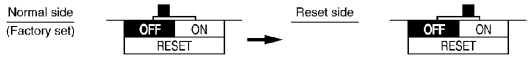

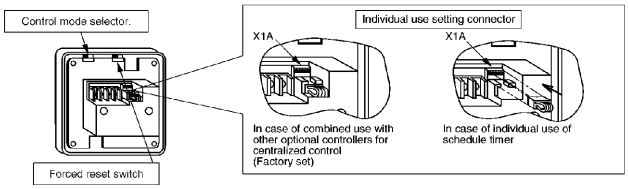

3P162015A

⑤ Setting for special function
When you want to have a programmed operation of a part of indoor units by using only schedule timer, cut off JP1 and supply the power again.
You can have a programmed operation of the indoor units set the address for central control by local remote controller.

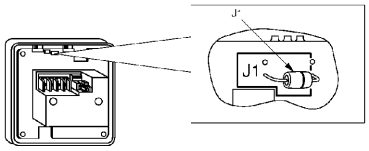

3. Transmission wiring

- In case of individual use of schedule timer
  Connect terminals of the schedule timer (F1. F2) with terminals of the indoor unit (F1. F2). Connect terminals of the schedule timer (D1. D2) and the connector on the indoor unit PC board, using the attached electric wire and crimp style terminals.
  Prevent the connection part of crimp style terminal from getting out of the electric parts box of indoor unit.
- In case of combined use with other optional controllers for centralized control
  Connect terminals of the schedule timer (F1, F2, D1, D2) and the terminals of the central remote controller (or unified ON/OFF controller).

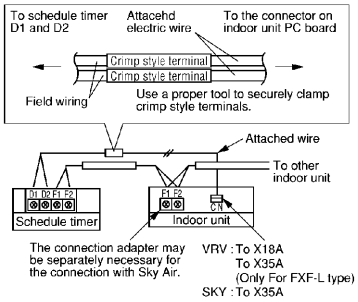

Wiring specifications

	F1, F2	D1, D2
Wiring	Sheathed wire (2-wire)	Sheathed wire (2-wire)
Gauge	0.75 ~ 1.25mm²	0.75 ~ 1.25mm²
Length	Max. 1000m	Max. 150m

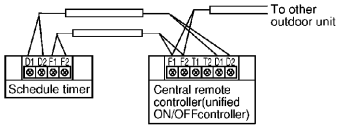

NOTES:
1. Electrical box and transmission wiring are not attached.
2. Do not touch the PC board with your hand.
3. Keep transmission wiring at least 50 mm away from power supply wiring to avoid malfunctions.

4. Install the upper part of the remote controller as before.

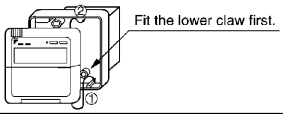

3 SETTING GROUP NO. FOR CENTRALIZED CONTROL

Set the group number of each group of the indoor unit from the remote controller. (In case of no remote controller, also connect the remote controller and set the group No. Then, remove the remote controller.)

(1) Turn ON the power of the indoor unit and SCHEDULE TIMER.
(Unless the power is ON, no setting can be made.)
Check that the installation and electrical wiring are correct before turning the power supply ON.
(When the power supply is turned ON, all LCD appear once and the unit may not accept the operation for about one minute with the display of "88".)

(2) While in the normal mode, hold down the "TEST" button for a minimum of 4 seconds.
The remote controller will enter the FIELD SET MODE.

(3) Select the MODE No. "00" with the "⊕" button.

(4) Use the "⊕" button to select the group No. for each group.
(Group numbers increase in the order of 1-00,1-01,···1-15, 2-00,···8-15.)

(5) Press "CLEAR" to set the selected group No.

(6) Press "TEST" to return to the NORMAL MODE.

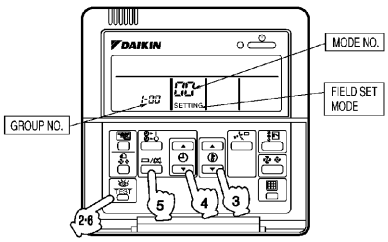

NOTES)
- In case of individual use of schedule timer
  Group number setting is not necessary. It is automatically set when turning power supply ON.
- See the instruction manuals which came with the Ventiair and adapters (i.e., multi-purpose adapters) for details on their Group No. settings.

NOTICE Be sure to keep the operation manual for maintenance.

4 TEST OPERATION

Refer to the installation manual attached to the outdoor unit.

In case the schedule timer is used individually and the wiring is changed after the system has been operated, reset the power after energizing for more than five minutes.
It may not be possible to control the unit from the schedule timer.

3P162015A

20.1.5 System Configuration and Electric Wiring

With a schedule timer, you can set on/off time twice a day by units of 1 week for up to 128 indoor units.

■ **System Configuration**

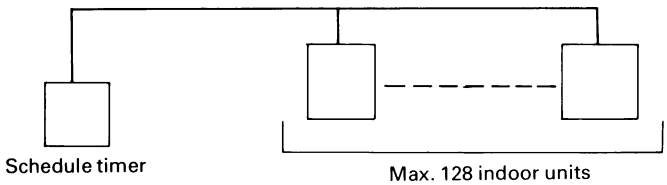

If using the schedule timer alone, you do not have to set the centralized control group No. for group control.

■ **Transmission Wiring**

<Indoor Unit Wiring>

1. If using the schedule timer alone:

■ For the schedule timer's power supply, connect the schedule timer (D1, D2) with the connector (X18A/35A) on the indoor unit PCB by crimped style terminal with the attached electric wire.

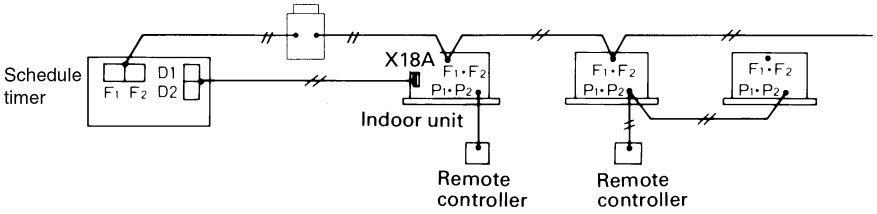

2. If using in combination with other centralized control equipment:

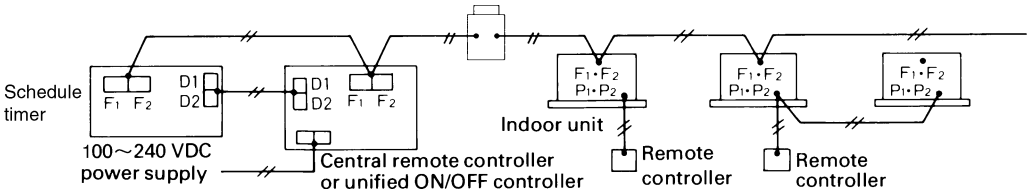

Transmission wiring for control: 0.75~1.25 mm^2 sheathed vinyl cord or cable (2 wire) ..... Max. 1,000 m (Total Max. 2,000 m)

<Transmission Wiring Connection Example>

Series wiring is the same as with the central remote controller.

21. Interface Adaptor for SkyAir Series

21.1 DTA112BA51

Installation

Interface adaptor for SkyAir Series — Installation manual

DTA112B51, DTA112BA51

Accessories Check if the following accessories are included in the kit.

① Adaptor	② Relay PCB	③ Relay harness	④ PC board support	⑤ Clamp material	⑥ Installation manual
x1	x1 (for models other than FFQ)	x1 (for FFQ model)	x4	x2	x1

Note Before opening control box lid, be sure cut off the all air conditioner power of indoor unit and outdoor unit, or you may get an electric shock..

1 SYSTEM OUTLINE

- By connecting this kit to an optional controller for centralized control, all units of the SKY AIR Series in the system can be controlled as a group from the optional controller.
- One kit must be installed onto the master unit of each group.

2 ELECTRIC WIRING for FFQ model

(1) Mount the Adapter ① on the indoor unit PCB by setting the triangle marks together. (Fig. 1)
(2) Insert the Relay harness ③ into the connector of the Adapter ① (Fig. 2)
(3) Remove the remote control terminal block(X1M) from the control box mounted inside the indoor unit.
(4) Connect the Relay harness ③ with the terminals F1 and F2 on the terminal block(X1M). (Fig. 2)
(5) Mount the remote control terminal block(X1M) on the inside of the control box as it was before removing it.
(6) Bind the extra wires with the attached Clamp material ⑤ so that the wires do not go over the indoor unit PCB. (Fig. 3)
(7) Connect the wires from the terminals F1 and F2 to the centralized control. (Fig. 2)

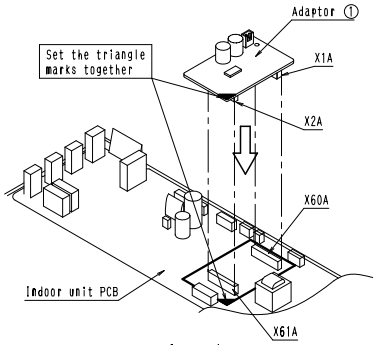

Fig. 1

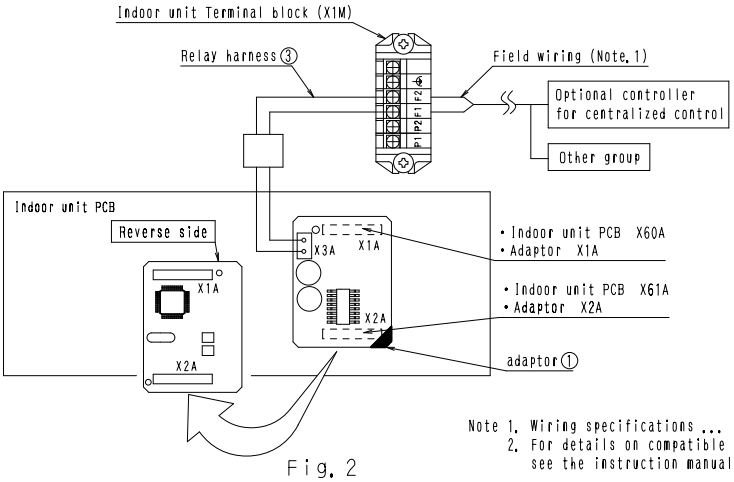

Fig. 2

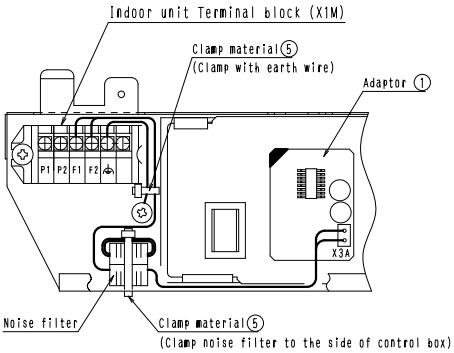

Fig. 3

Note 1. Wiring specifications ... Use a 0.75-1.25mm sheathed vinyl cord or cable (2 wires).
2. For details on compatible systems and how to connect to optional controllers, see the instruction manual of the optional controller and technical reference materials.

1P107904C

❸ ELECTRIC WIRING for MODELS OTHER THAN FFQ

(1) Mount the adapter ① on the indoor unit PCB by setting the triangle marks together. (Fig. 1 in ❷ ELECTRIC WIRING for FFQ model)
(2) Insert the harness from Relay PCB ② into the connector (X3A) of the Adapter ①. (Fig. 4)
(3) Mount the Relay PCB ② on the required location referring to the figure of Installe position of Relay PCB .
(4) Bind the extra wires with the attached Clamp material ⑤ so that the wires do not go over the indoor unit PCB and the parts on the PCB do not get damaged.
(5) Connect the wires from the terminals F1 and F2 to the centralized control. (Fig. 4)

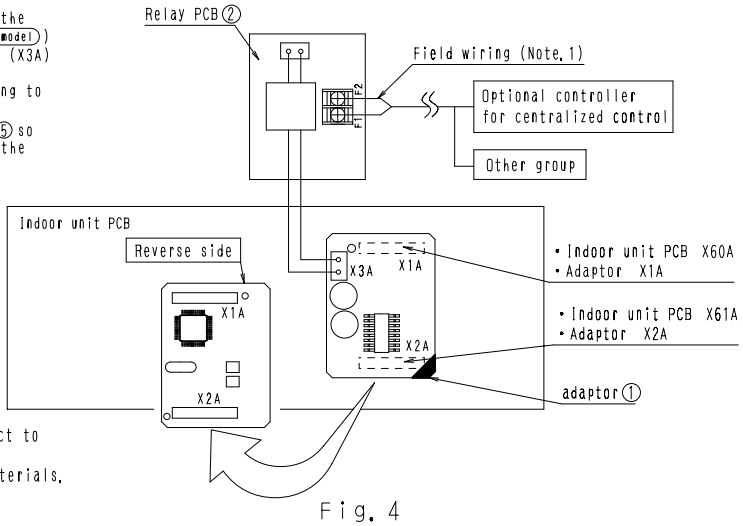

Fig. 4

Note 1. Wiring specifications ... Use a 0.75-1.25mm sheathed vinyl cord or cable (2 wires).
2. For details on compatible systems and how to connect to optional controllers, see the instruction manual of the optional controller and technical reference materials.

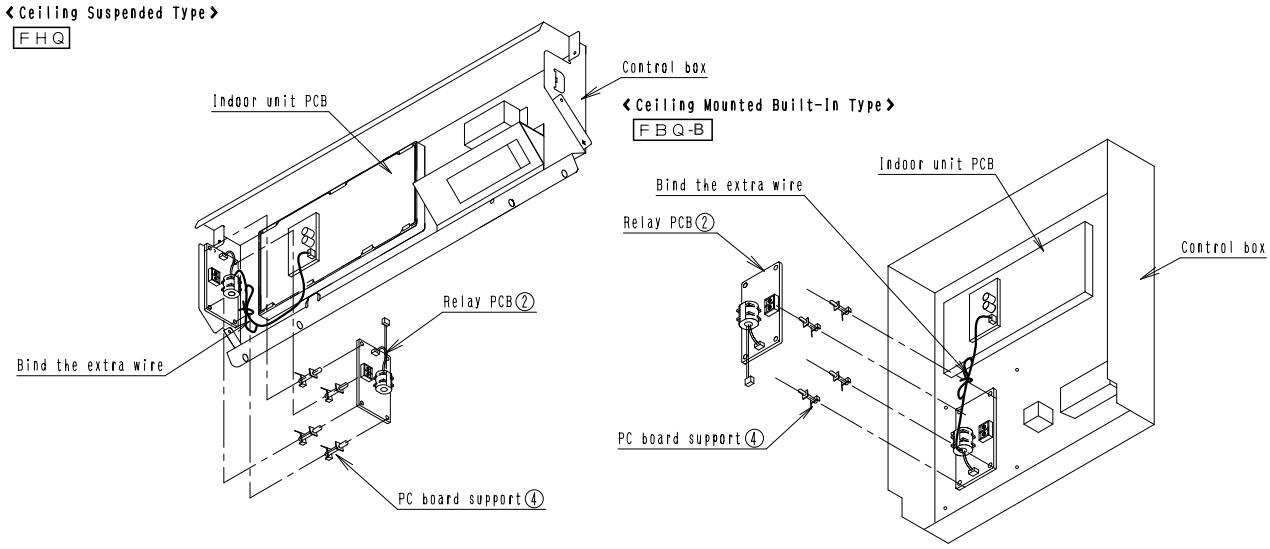

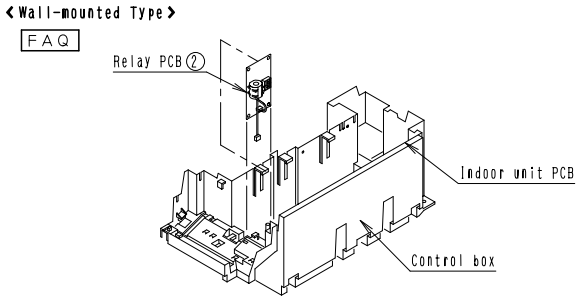

C: 1P107904C

22. Central Control Adaptor Kit

22.1 DTA107A55

COMPONENTS

Check the following components are included in this optional accessory before installation.

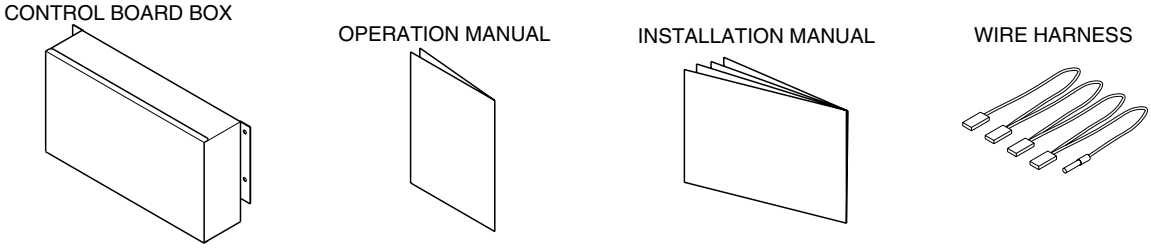

Give to the customer this OPERATION MANUAL certainly.

INSTALLATION

Deside the situation of Control Board Box.
It is affected the situations of the thermistor.
The length of lead wire - Thermistor : 2.5m

① Install the thermistor (in the control board box) at the inlet duct or the suction grille.
Use the kit : remote sensor (KRCS01-1B), if you need the longer length than it. (Can use it untill 12m.)

② Install the control board box on the wall or the pillar.
Make sure the wire inlet is at the bottom of the box.
Use 4 bolts (M5) for fixing the box.
Install the box in the indoor side.
(Example : Set it in the ceiling or in the room.)
Do not install the box in the air conditioner.
Fixing situation : See below Fig. (Height : 125mm)
(*shows the fixing pich.)

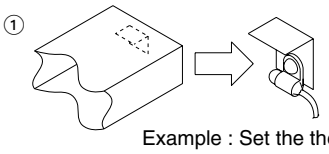

Example : Set the thermistor into the inlet duct and clamped by resin clamp and fix plate.

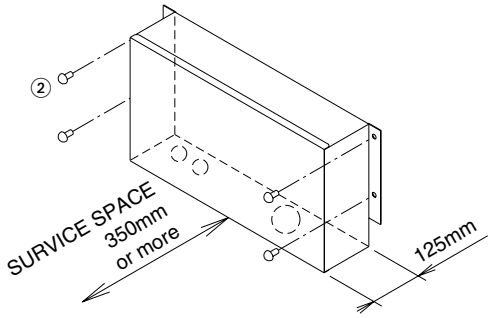

Unit (mm)

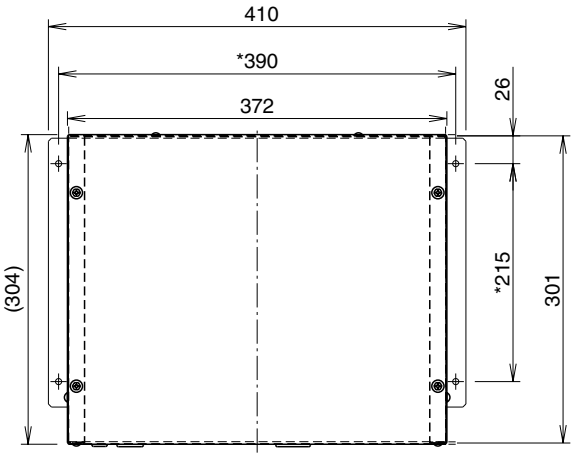

C: 2P042157

1. General instructions

- All wiring, components and materials to be procured on site must comply with the applicable local and national codes.
- Use copper conductors only.
- All field wiring and components must be provided by licensed electrician.
- Unit shall be grounded in compliance with the applicable local and national codes.
- After wiring work, check power to the equipment shuts OFF when swich is shut OFF.

⚠ WARNING

Use ring type crimp style terminal for connection to power supply terminal block.
If is not used, satisfy the following conditions :
- Do not connect wires of different gauge to the same power supply terminal. (Looseness in the connection may cause overheating.)
- When connecting wires of the same gauge, connect them according to the righthand figure.

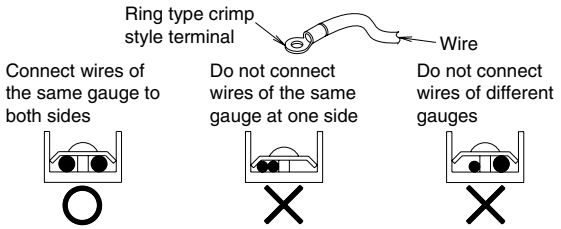

2. Wiring specification

Use the wire shown right for between the unit and the control board box.

Type	Size
UL1015 AWG18 equivalent	0.75mm² each

Connect the wiring between indoor and outdoor units, centralized control equipment and remote controller.
For details, refer to the installation manual of them.

① Remove the cover of the control board box, after setting it. (Parts situation is shown right Fig.)
② Install the thermistor throgh the bush. (It is in the control board box. See below Fig.)

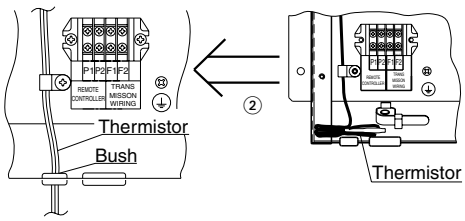

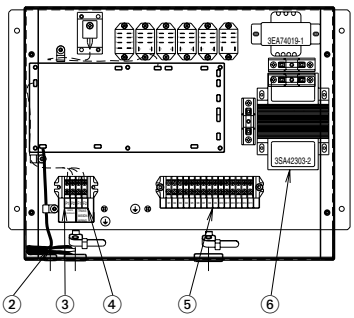

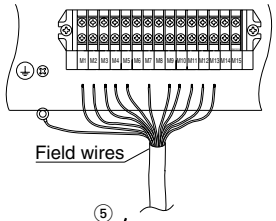

③ Connect the read wires of Remote Controller. (See the below Fig.) Ground the sheild of the cords to the control board box.

④ Connect the read wires of centralized control equipment. (See the below Fig.) Ground the sheild of the cords to the control board box.

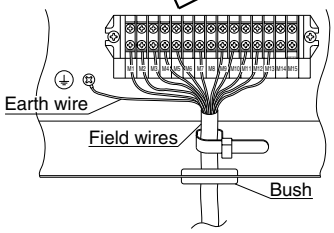

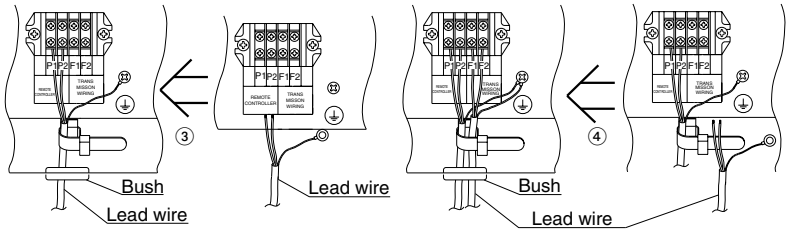

⑤ Connect the field wires to the Air Conditioner. (Details: See the back side.) Ground the control board box.

⑥ Changel the connection of transformer according to the right table. (Especially for Y1 Model.)

VOLTAGE		TERMINAL
PRIMARY	SECONDARY	
220V	200V	*U-V1
230V	200V	U-V2
240V	200V	U-V3

* FACTORY CONNECTION

Clamp these wires by clamp materials certainly. (Clamp the earth wire.) (See right Fig.)
Do not clamp the high voltage wires (Field wires) and the low voltage wiers (Lead wire and Thermistor) both inside and outside of the control board box.

[Finished Wiring situation]

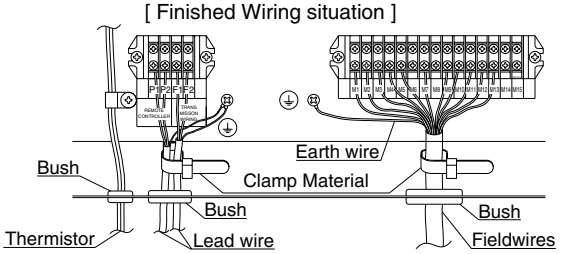

⚠ DO NOT CLAMP THESE WIRES!

NOTE

- Prepare the remote controller (BRC1C62).
  REASON : The remote controller is needed per each kit for setting the address.

C: 2P042157

3. Connection of the terminal

Connect between the air conditioner and DTA107A55 shown below.

In case of FD03~05K

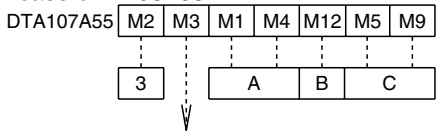

Connect the wiring between the box of this kit and the EL. COMPO. BOX ASSY of the indoor unit.
[Refer to the wiring diagram of the indoor unit.]

See below for connecting the terminal "M3". (The Output of alarm signal)
About these models, we can only output the alarm signal of indoor fan motor.
Connect the wiring between the terminal "M3" and the terminal "96" of magnetic contactor of indoor fan motor (K1M).

In case of FD06~10K

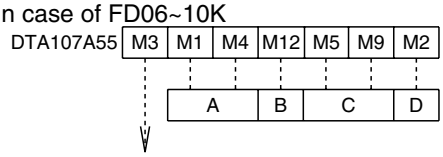

Connect the wiring between the box of this kit and the EL. COMPO. BOX ASSY of the indoor unit.
[Refer to the wiring diagram of the indoor unit.]

See below for connecting the terminal "M3". (The Output of alarm signal)
Use the attached wire harness and change from the wire to it. The wire is connected between K1R(5), K1R(7), K2R(7), and K3R(5). [( )is shown the terminal.]
Connect the wiring between the terminal "M3" and the solderless splices butt "M3" of the wire assy.

In case of FD15 · 20K

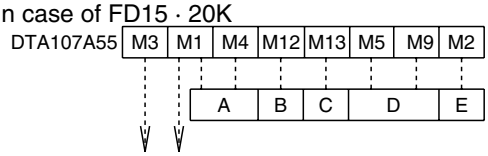

Connect the wiring between the box of this kit and the EL. COMPO. BOX ASSY of the indoor unit.
[Refer to the wiring diagram of the indoor unit.]

See below for connecting the terminal "M3". (The Output of alarm signal)
Connect the wiring between the terminal "M1" and the terminal "6" of K4R (magnetic relay).
Connect the wiring between the terminal "M3" and the terminal "4" of K4R (magnetic relay).

In case of UAT06~10K, UAT06~12KA

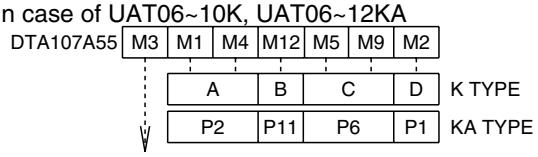

Connect the wiring between the box of this kit and the EL. COMPO. BOX ASSY of the air conditioner.
[Refer to the wiring diagram of the air conditioner.]

See below for connecting the terminal "M3". (The Output of alarm signal)
Use the attached wire harness and change from the wire to it. The wire is connected between K1R(5), K1R(7), K2R(7), and K3R(6). [( )is shown the terminal.]
Connect the wiring between the terminal "M3" and the solderless splices butt "M3" of the wire assy.

In case of UAT15 · 20K, UAT15~21KA

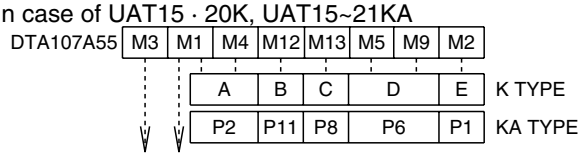

Connect the wiring between the box of this kit and the EL. COMPO. BOX ASSY of the air conditioner.
[Refer to the wiring diagram of the air conditioner.]

See below for connecting the terminal "M3". (The Output of alarm signal)
Connect the wiring between the terminal "M1" and the terminal "6" of K3R (magnetic relay).
Connect the wiring between the terminal "M3" and the terminal "4" of K3R (magnetic relay).

In case of UATY06K

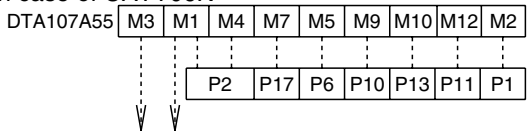

Connect the wiring between the box of this kit and the EL. COMPO. BOX ASSY of the air conditioner.
[Refer to the wiring diagram of the air conditioner.]

See below for connecting the terminal "M3". (The Output of alarm signal)
In case of Y1, connect the wiring between the terminal "M1" and the terminal "5" of K2R (magnetic relay).
Connect the wiring between the terminal "M3" and the terminal "3" of K2R (magnetic relay).
In case of Y19, connect the wiring between the terminal "M3" and the terminal "8" of K4R (magnetic relay).
In case of TAL and YAL, use the attached wire harness and change from the wire to it.
The wire is connected between K1R(6), K1R(7), K2R(7), and K3R(6). [( ) is shown the terminal.]
Connect the wiring between the terminal "M3" and the solderless splices butt "M3" of the wire assy.

2P042158A

In case of UATY08~12K

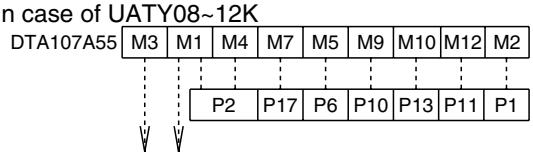

Connect the wiring between the box of this kit and the EL. COMPO. BOX ASSY of the air conditioner.
[Refer to the wiring diagram of the air conditioner.]

See below for connecting the terminal "M3". (The Output of alarm signal)
In case of Y1, connect the wiring between the terminal "M1" and the terminal "5" of K2R (magnetic relay).
Connect the wiring between the terminal "M3" and the terminal "3" of K2R (magnetic relay).
In case of Y19, connect the wiring between the terminal "M3" and the terminal "8" of K4R (magnetic relay).
In case of TAL and YAL, use the attached wire harness and change from the wire to it.
The wire is connected between K1R(5), K1R(7), K2R(7), and K3R(5). [( ) is shown the terminal.]
Connect the wiring between the terminal "M3" and the solderless splices butt "M3" of the wire assy.

In case of UATY15~21K

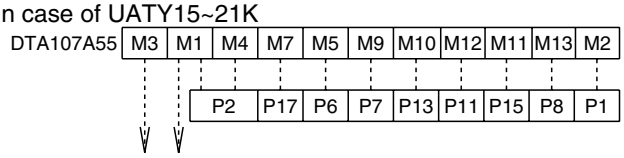

Connect the wiring between the box of this kit and the EL. COMPO. BOX ASSY of the air conditioner.
[Refer to the wiring diagram of the air conditioner.]

See below for connecting the terminal "M3". (The Output of alarm signal)
In case of Y1, connect the wiring between the terminal "M1" and the terminal "6" of K2R (magnetic relay).
Connect the wiring between the terminal "M3" and the terminal "4" of K2R (magnetic relay).
In case of Y19, connect the wiring between the terminal "M3" and the terminal "8" of K4R (magnetic relay).
In case of TAL and YAL, connect the wiring between the terminal "M1" and the terminal "6" of K14R (magnetic relay).
Connect the wiring between the terminal "M3" and the terminal "4" of K14R (magnetic relay).

2P042158A

4. Field Setting

(If optional accessories are mounted on the indoor unit, the indoor unit setting may have to be changed. Refer to the installation manual for each optional accessory.)

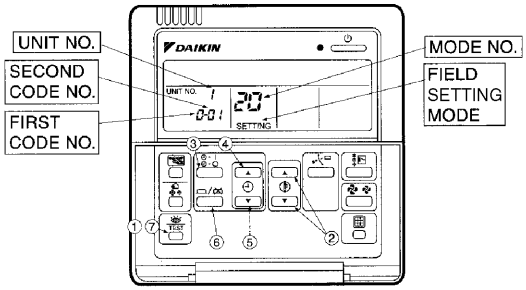

Procedure

①When in the normal mode, press the "TEST" button for a minimum of four seconds, and the FIELD SETTING MODE is entered.

②Select the desired MODE NO. with the "" button.

③During group control, when setting by each indoor unit (mode No. 20, 21 and 23 have been selected), push the "" button and select the INDOOR UNIT NO to be set. (This operation is unnecessary when setting by group.)

④Press the "" upper button and select FIRST CODE NO.

⑤Press the "" lower button and select the SECOND CODE NO.

⑥Press the "" button once and the present settings are SET.

⑦Press the "TEST" button for about one second to return to the NORMAL MODE.

(Example) If during group setting and the time to clean air filter is set to FILTER CONTAMINATION - HEAVY, SET MODE NO. to "10," FIRST CODE NO. to "0," and SECOND CODE NO. to "02."

Mode No. Note) 1	FIRST CODE NO.	Description of Setting		SECOND CODE No. Note) 2					
					01		02		03
10(20)	0	Filter Contamination - Heavy/Light (Setting for spacing time of display time to clean air filter) (Setting for when filter contamination is heavy, and spacing time to clean air filter is to be halved)	Ultra-long-life type	Light	Approx. 10,000 hours	Heavy	Approx. 5,000 hours	—	
			Long-life type		Approx. 2,500 hours		Approx. 1,250 hours		
			Standard type		Approx. 200 hours		Approx. 100hours		
	1	Long-life filter type (Setting of filter sign indication time) (Change setting when Ultra-long-life filter is installed)		Long-life filter		Ultra-long-life filter (1)		—	
	3	Spacing Time of Display Time to Clean Air Filter Count (Setting for when the filter sign is not to be displayed)		Display		Do Not Display		—	
11(21)	0	Setting Number of Connected SkyAir Simultaneous Operation System Indoor Units (Setting for Simultaneous Operation System)		Pair		Twin		—	

NOTES)
1. Setting is carried out in the group mode, however, set the mode number inside the ( ) for individual setting of the each indoor unit or confirmation after setting.
2. The SECOND CODE number. is set to "01" when shipped from the factory.
However for the following cases it is set to "02"
• Air flow direction range setting.
3. Do not make any settings not given in the table on the left.
4. Not displayed if the indoor unit is not equipped with that function.
5. When returning to the normal mode, "88" may be displayed in the LCD in order for the remote controller to initialize itself.

C: 2P068938

23. Wiring Adaptor for Other Air-Conditioner

23.1 DTA103A51

23.1.1 Function

This kit contains an I/O interface adaptor for centralized control equipment, used when there is a non-connectable air conditioner and electrical equipment. When connected to the centralized control equipment, this adaptor enables operation/stop and display of operation/error monitors from the centralized control equipment.

Type	BRC1C62	DTA103A51
Group/Zone / Item	One Group	Unified control for all Zone
ON/OFF	√	√
Temp. setting	√	
Airflow rate setting	√	
Airflow direction setting	√	
Timer setting twice a day	√	
Mode setting	√	
Filter sign reset	√	
Inspection/Test operation	√	Operation & Error display only by lamps

23.1.2 Part Names and Functions

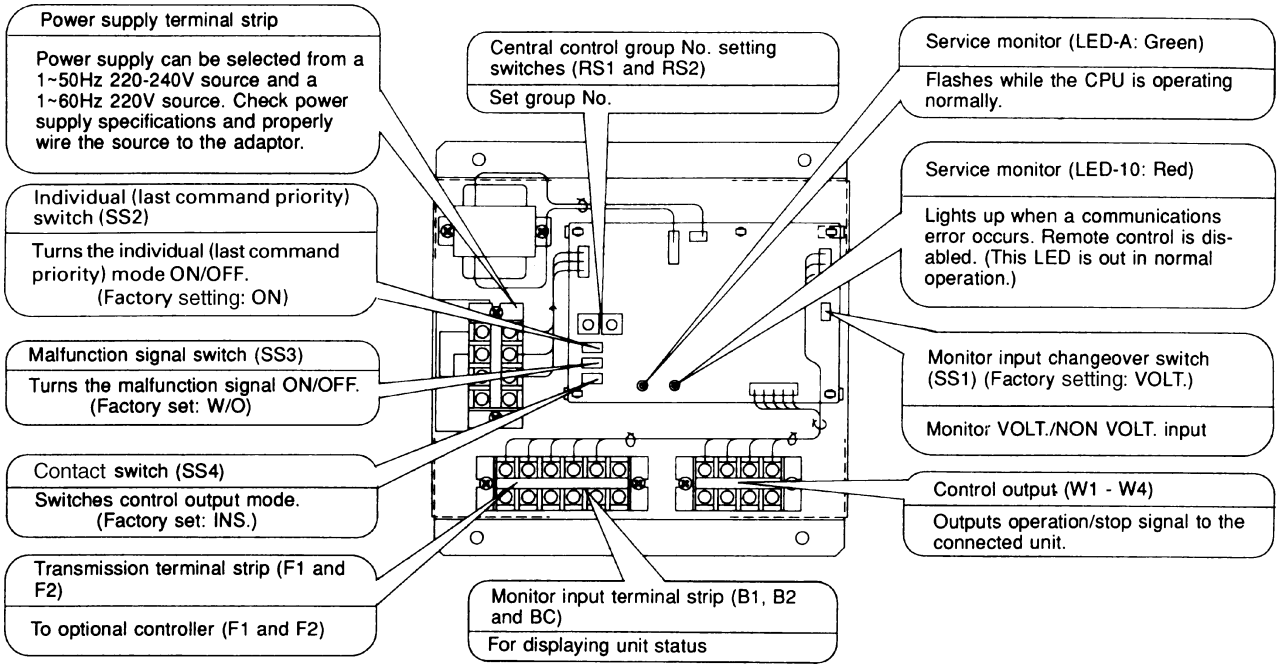

23.1.3 Installation Manual

Securely install the adaptor with the attached installation screw.

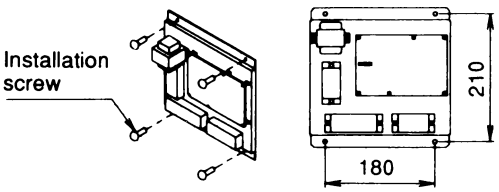

Note:

Install the adaptor inside a control box of outer dimensions: 230W × 230D × 60H.

Supply a control box at site with outer dimensions equal to or larger than those shown below. 230W × 230D × 60H.

C: 2PA53853

23.1.4 Electric Wiring Work

<Wiring Requirements>

1. Wire between the adaptor and central control equipment (F1, F2)
2. Wire to the connected units and set all switches. ... For details, refer to WIRING TO CONNECTED UNITS.
3. Wire to the power supply. ... For details, refer to POWER SUPPLY WIRING.

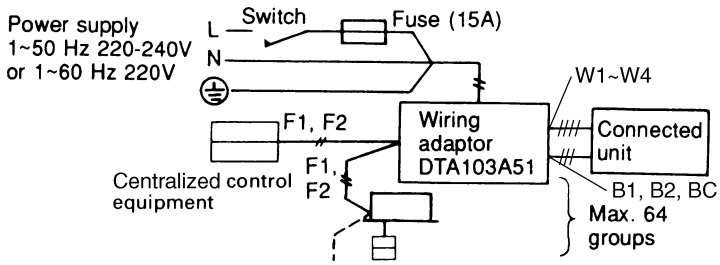

C: 2PA53853

<General Instructions>

- All wiring, components and materials to be procured on the site must comply with the applicable local and national codes.
- Use copper conductors only.
- All field wiring and components must be provided by licensed electrician.
- Unit shall be grounded in compliance with the applicable local and national codes.
- Fit the power supply wiring with a fuse and a switch.
- After wiring work, check power to the equipment shuts OFF when the switch is shut OFF.

<Wiring Specification>

	Type	Size
Power Supply Wiring	H05VV-U3G	(Note 1)
Transmission Wiring	(Note 2)	0.75 - 1.25 mm²

Note:

1. Select the size in electric wire in accordance with the local and national codes.
2. You can use the shielded wire, sheathed vinyl cord or cable (2 conductors). See the installation manual of the optional controllers for centralized control equipment to be connected for further details.

<Wiring to Connected Units>

Control Output

Terminals W1 - W4 are non voltage contacts used in normal operation to output operation display (W1 and W2) and error display (W3 and W4) signals.

Ry1 and Ry2 Contact Specifications		
Voltage	Max. current	Min. Current
1~50Hz 220-240V 1~60Hz 220V	2A	1mA
⎓ 5-24V	3A	1mA

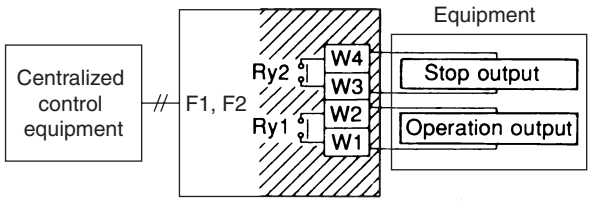

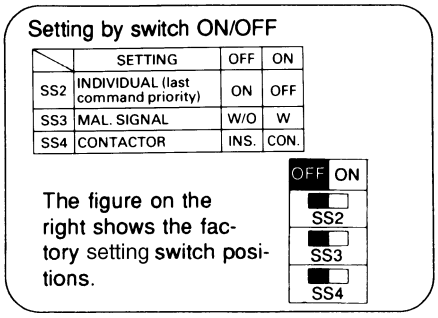

Output modes include instantaneous output (INS.) and constant output (CON.). Mode is changed at the contact switch (SS4). (Factory setting: INS)

C : 2PA53853

<Monitor Input>

Wire as explained here following, depending on whether input carries a voltage (VOLT.) or not (NON VOLT.). Make the VOLT/NON VOLT. setting at the monitor input changeover switch (SS1).

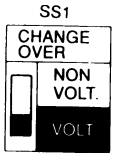

(For Voltage Charged Input)
Set the monitor input changeover switch to VOLT. (Factory setting: VOLT.)

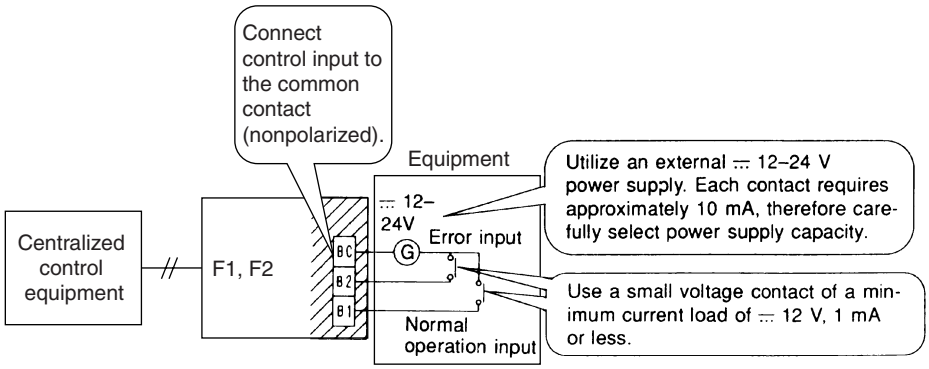

(For Non Voltage Input)
Set the monitor input changeover switch to NON VOLT. (Factory setting: VOLT.)

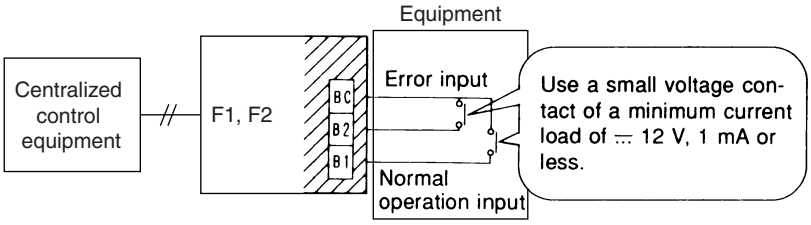

Switch the malfunction signal switch (SS3) according to needs (Factory setting: W/O [OFF]). Set the switch to W (ON) to display errors even if no operation feedback from the indoor unit is available, for example, when power to the indoor unit is OFF. Together, set the individual switch (SS2) to OFF (ON).

Note:

- This switch is ineffective when SS2 is set to ON (OFF).
- The centralized control equipment display will change, as shown on the right, depending on the monitor input state and the malfunction signal switch (SS3) setting.
- After switching the centralized control equipment from stop to operation, it will take from 10 to 30 seconds before the centralized control equipment display will indicate an error.

(SS3) Malfunction Signal	Centralized Control Equipment Display at Command Output		
	Monitor Input State		
	Operation Input ON	Operation Input OFF	Error Input ON
W	Operation Display	Error (A1 Display)	Error (A1 Display)
W/O		Operation Display	

C: 2PA53853

<Setting Group No. for Centralized Control>

Set the group No. at the centralized control group No. setting switches (RS1 and RS2). Refer to the below table to set group No. Group No. increases in the order of 1-00, 1-01 ... 1-15, 2-00, ... 4-15. Refer to the installation manual of the centralized control equipment.

RS1 Switch Setting and Upper Group No. Position

Position	0	1	2	3	4	5	6	7	8	9
Group No.	—	1	2	3	4	—	—	—	—	—

RS2 Switch Setting and Lower Group No. Position

Position	0	1	2	3	4	5	6	7	8	9	A	B	C	D	E	F
Group No.	00	01	02	03	04	05	06	07	08	09	10	11	12	13	14	15

Make Settings before Turning ON the Power.

Note:
Group number need not be set on this adaptor during individual use with either a wiring adaptor for electrical appendices or a schedule timer. Setting is automatic.
Ex. Setting group No. 1-15
First and second group No.s are indicated as below.

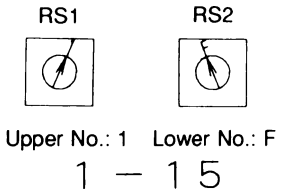

<Power Supply Wiring>

Power supply can be selected from a 1~50 Hz 220-240V source and a 1~60 Hz 220V source. Check power supply specifications and properly wire the source to the adaptor.

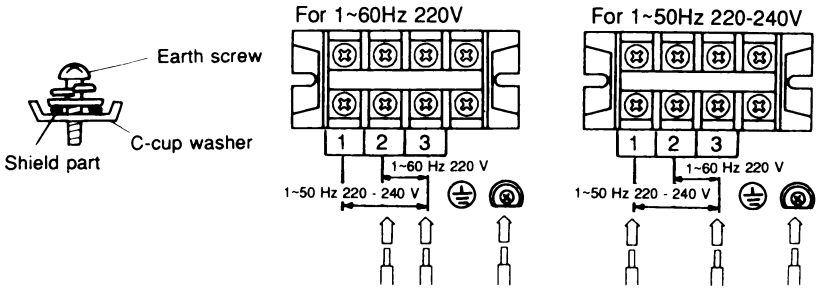

Note:
- Ground wires as shown in the figure on the above.
- The adaptor may malfunction or be damaged if improperly wired.
- The fuse is designed for short circuit protection (Overcurrent protection). Therefore, it may not offer sufficient protection against improper voltage.

2PA53853

24. DIII-NET Expander Adaptor

24.1 DTA109A51

2

Accessories Check the following accessories are included in the kit before the installation

adaptor

×1

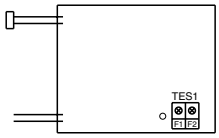

PCB support	× 4
Clamp	× 3
Installation Manual	× 1

Note: This adaptor does not apply to salt damege resistsnce.

1 General description of system

The adaptor allows easy system expansion as long as restrictions are observed.

1. The below systems can be controlled on the DIII-NET when using the adaptor.

(1) Up to 1024 units can be centrally controlled in 64 different groups.
(With 2 central remote controllers, up to 1024 units can be controlled in 128 groups.)
Restrictions on the number of units that can be connected to DIII-NET apply to each adaptor.

(2) Wiring restrictions (max.length : 1000m, total wiring length : 2000m, max.number of branches : 16) apply to each adaptor.

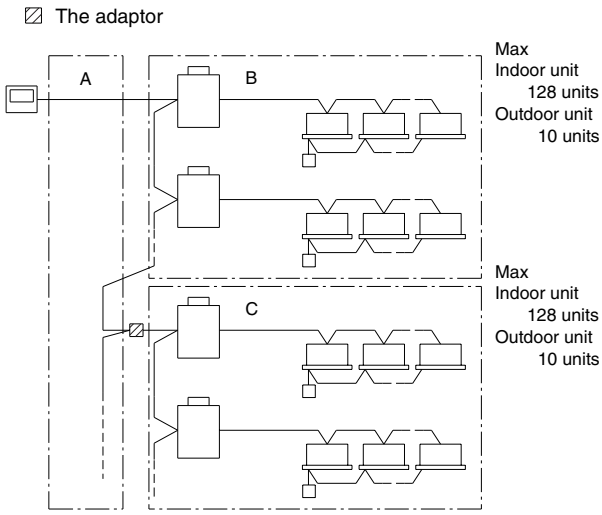

A maximum of 128 indoor units and 10 outdoor units can be connected in each group B and C.

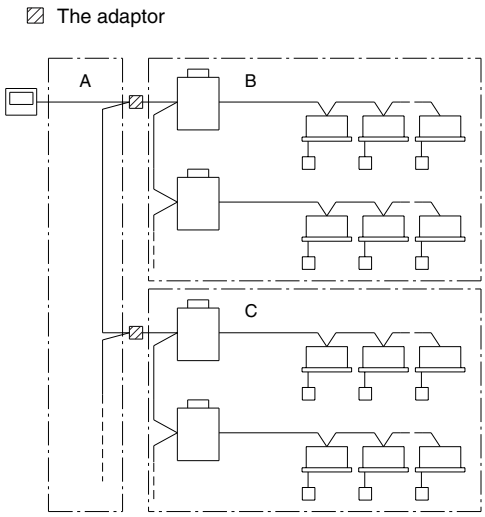

Each group A, B and C can have a maximum wiring length of 1000m, total wiring length of 2000m and a maximum 16 branches.

C: 1P013360

(3) Setups risky for centralized control systems are possible.

Without the adaptor

Misswiring such as applying 220-240V to circuits of DIII-NET should possibly shut down the entire system.

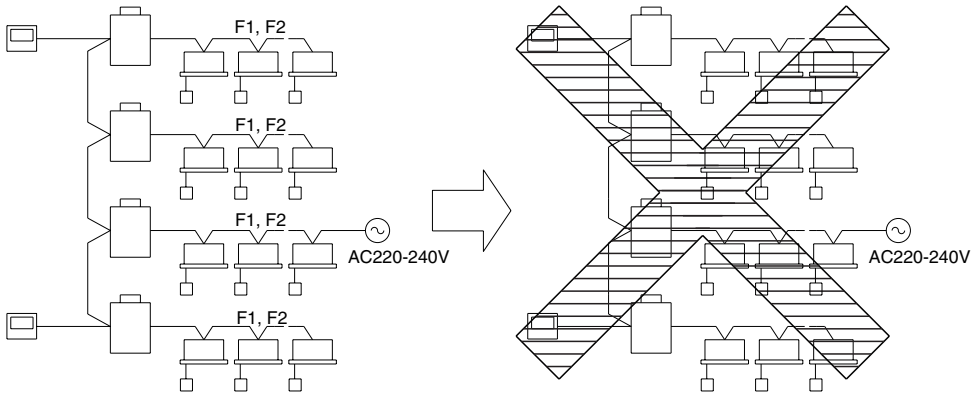

With the adaptor

Should trouble occur, only units below the adaptor are shut down.
Thus, it is possible to avoid a total system shutdown.

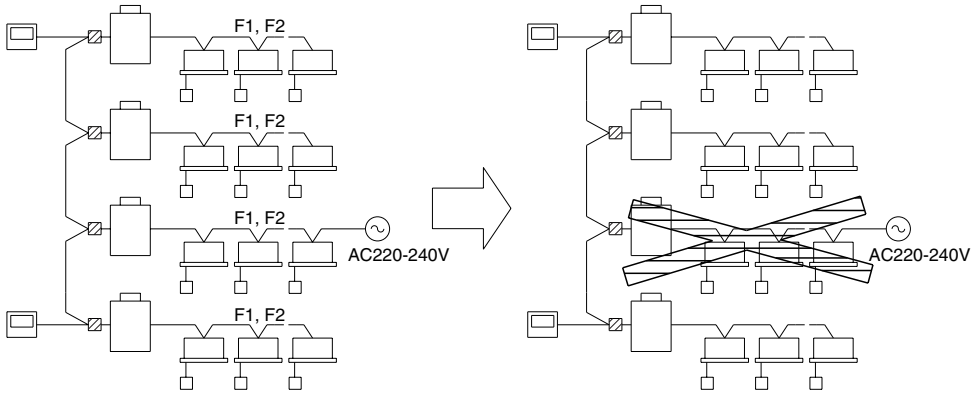

❷ Names of parts and functions

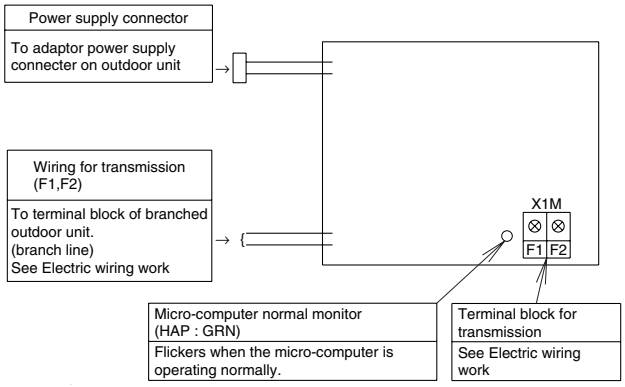

❸ Installation

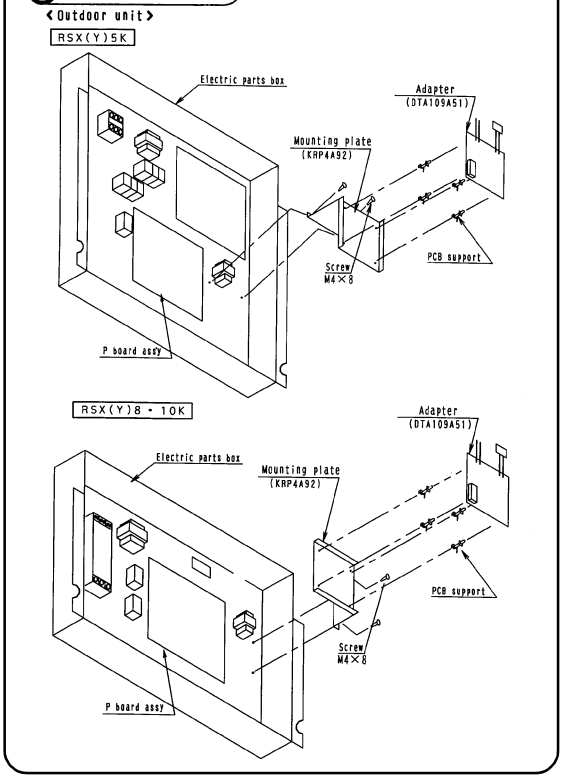

C: 1P013360

4 Electric wiring work

(1) Connect the wire from the adaptor to the adaptor power connector on the outdoor unit's PCB.
(For connector Nos.,see the electric wiring diagrams for the indoor and function units.)
(2) Connect transmission wires between outdoor units (Outdoor-Outdoor terminal board).
(3) Wire transmission wires to terminal boards as shown below.

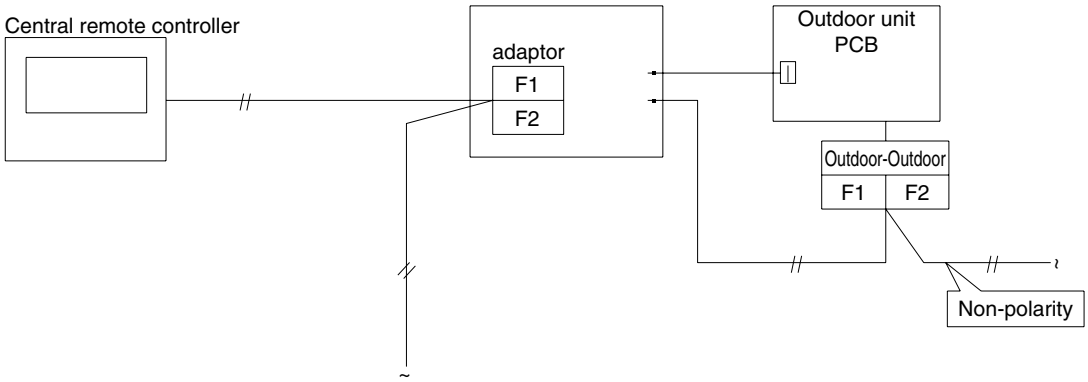

Note:

(Transmission wiring specifications)
- 0.75 ~ 1.25mm² sheathed wire (2 wire).

(Transmission wiring length)
- Observe the following limits on transmission wires.The limits apply to each adaptor.If you exceed the limits, it may cause malfunction.

  (Total length : 2000m
  Max. length : 1000m
  Max. number of branches : 16)

- At least one outdoor unit and one centralized control equipment are required.
- Up to 8 adaptors can be connected in one system.
- Do not locate adaptors downstream of other adaptors.
- If not used with a centralized control equipment, the expander adaptor cannot be used with the wiring adaptor for electrical appendices (KRP2A) or the schedule timer (DST301BA61).
- The external control adaptor for outdoor units controls group cooling and demand for each adaptor. (Anything beyond the expansion control falls outside the control domain.)
- Do not turn the system ON/OFF rapidly from the centralized control equipment. This can cause temporary erroneous displays.
- Sequential starts is controlled by each expander adaptor.

C: 1P013360

5 Wiring example

System with more than 10 outdoor units.

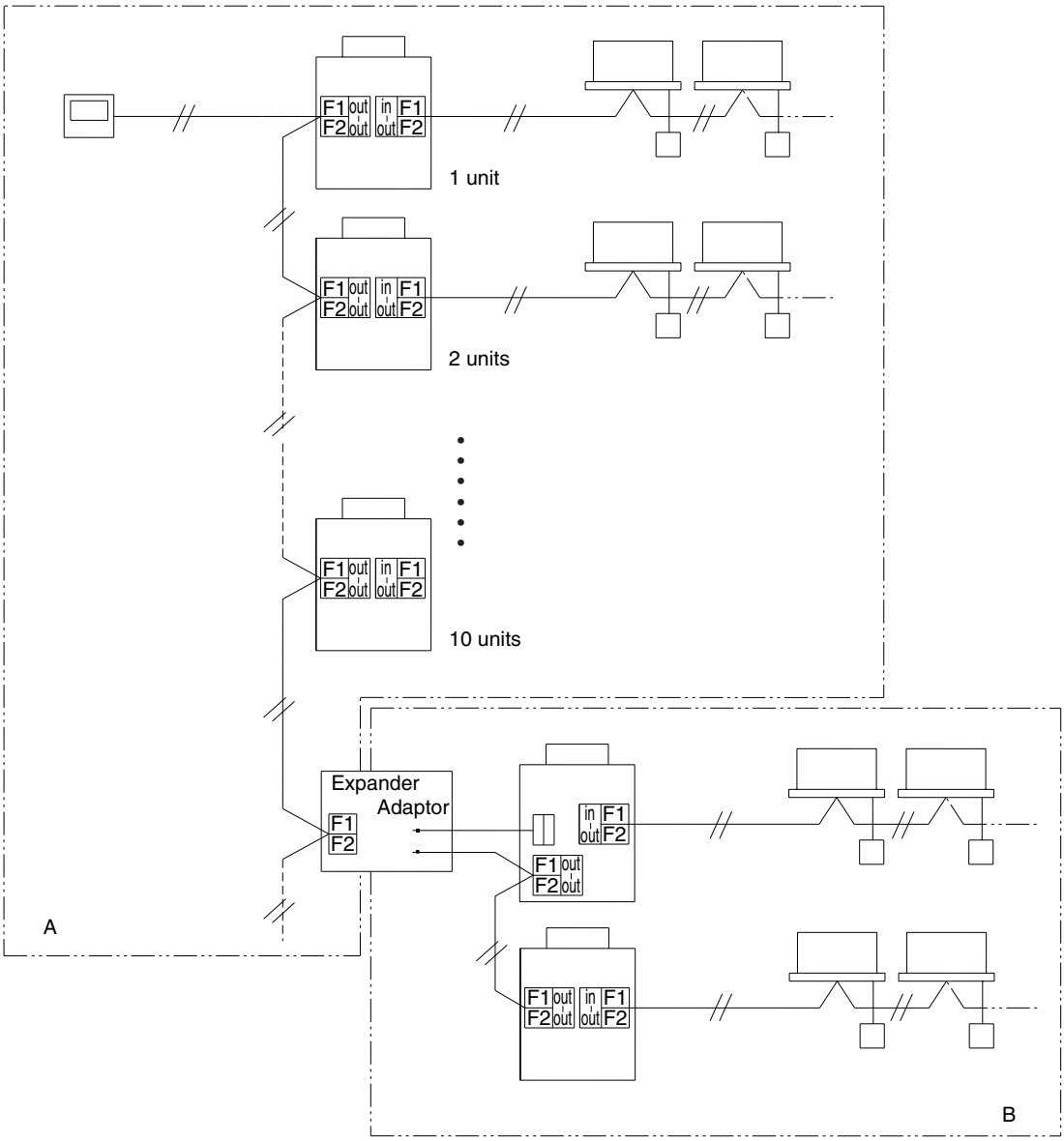

Note: Wiring restrictions (see "Electric wiring work") apply to each group A and B.

C: 1P013360

24.2 KRP4A92

Mounting Plate for DTA109A51

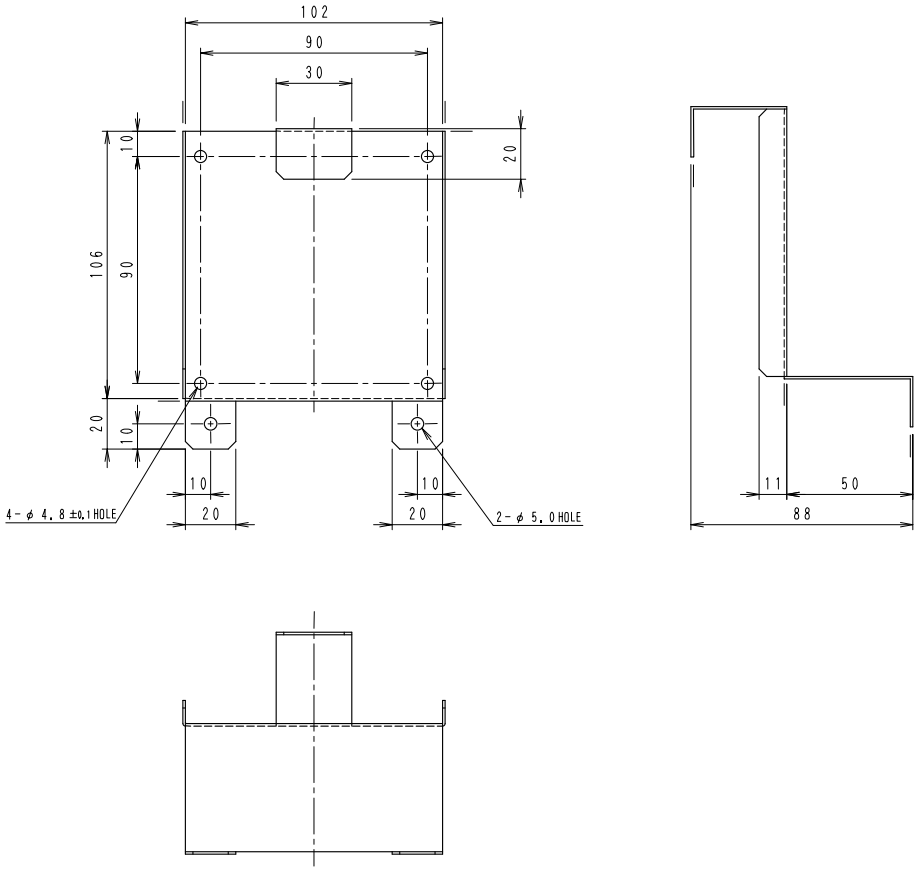

NOTE)CHAMFERS OF CORNERS NOT SPECIFIED : C3.

3P022630B

25. intelligent Touch Controller

25.1 DCS601C51

25.1.1 Front and Side View

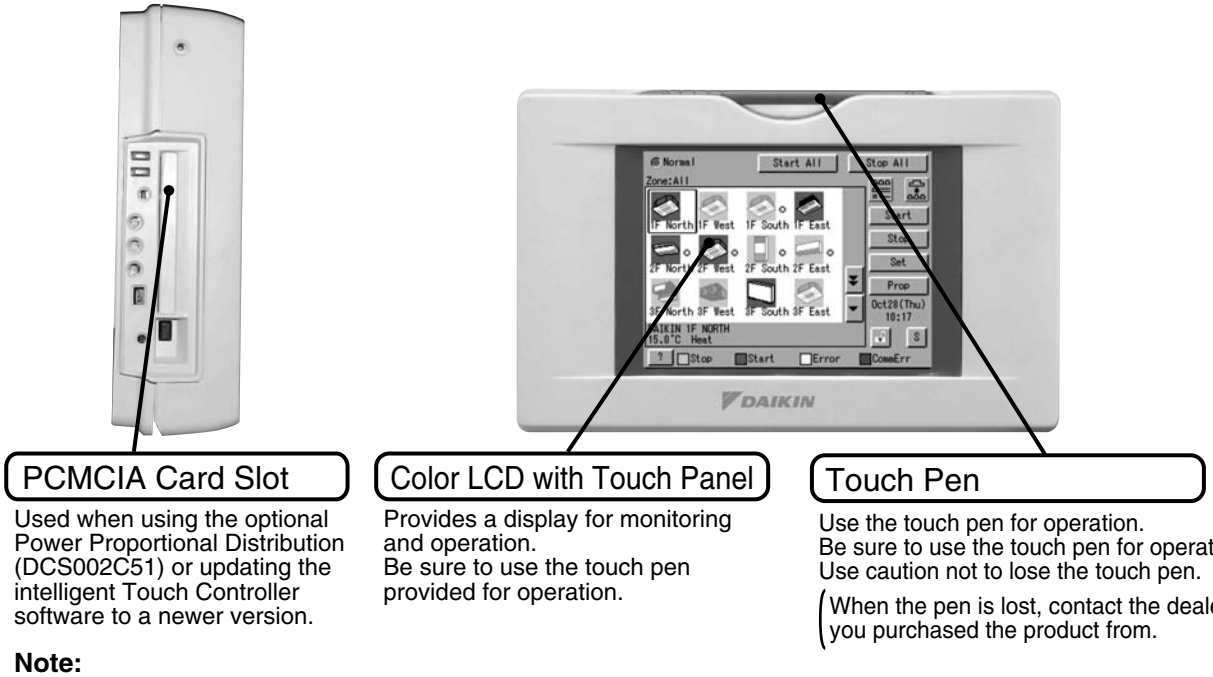

Note:

- Be sure to use the touch pen for operation of the touch panel of the intelligent Touch Controller. Operating with an object other than the touch pen provided may cause damage and failure.

C: 3P073677-12R

25.1.2 Part Names on the Monitoring Screen and the Functions

■ **Icon**

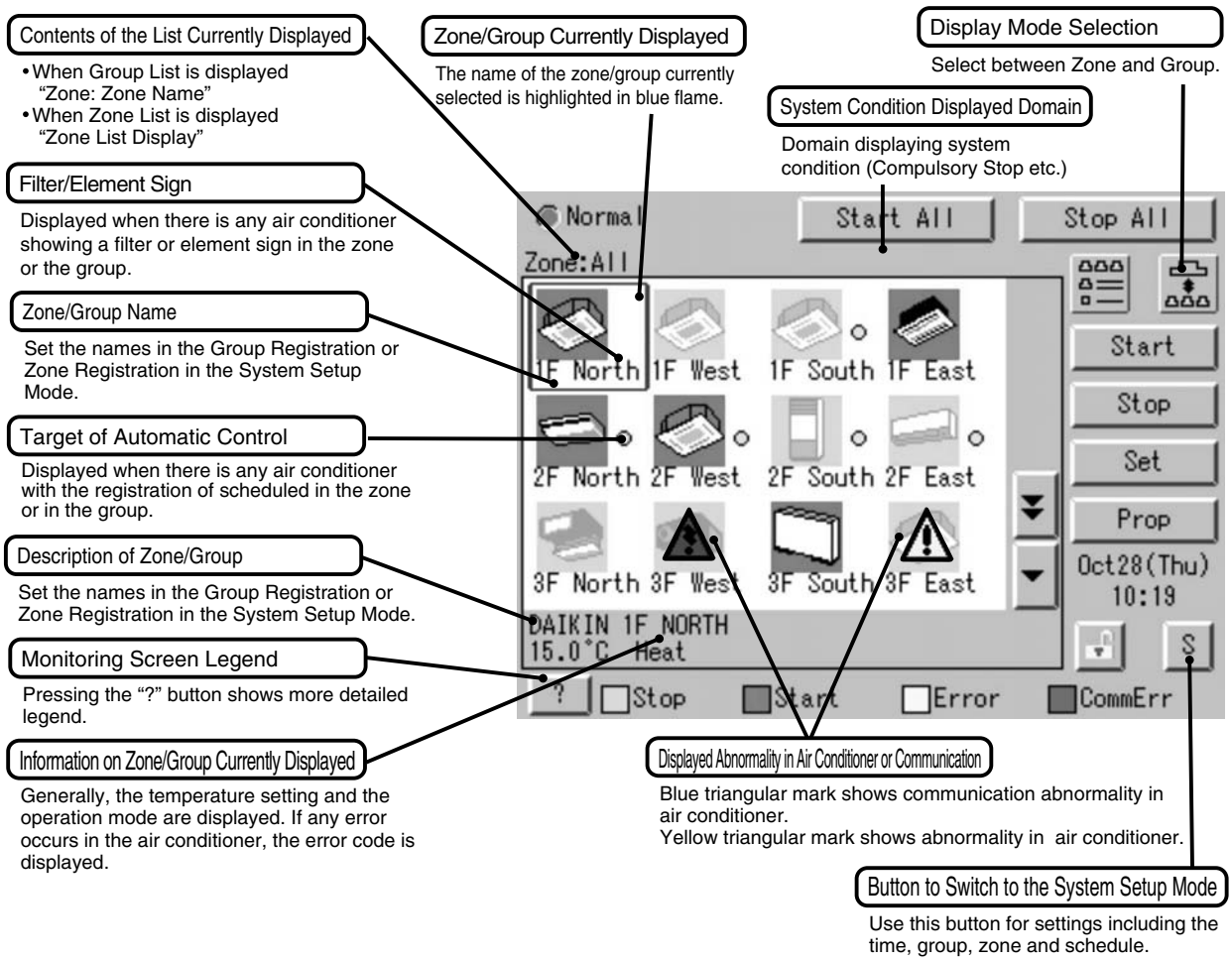

Display for Collective Monitoring of Air Conditioners Connected to intelligent Touch Controller

When operation is normal and any air conditioner is in operation:
Red/Normal
When operation is normal and all air conditioners are in stoppage:
Green/Normal
When there is any air conditioner generating an error:
Yellow/Abnormal
When there is any air conditioner with communication error:
Blue/Abnormal
(Change in color of Start/Stop is possible by Iconcolor Settings in System Settings.)

Start All Button

Button to collectively start all the air conditioners connected to intelligent Touch Controller.

Stop All Button

Button to collectively stop all the air conditioners connected to intelligent Touch Controller.

Display Mode Selection

Select the mode among icon/list/detailed icon.

Group/Zone Start Button

Button to start operation of the group/zone selected.

Group/Zone Stop Button

Button to stop operation of the group/zone selected.

Group/Zone Set Button

Makes settings (temperature setting, temperature control mode, etc.) and display of the group/zone selected.

Group/Zone Prop Button

Detailed display of the group/zone selected

Current Time Display

Shows the current date and time.

Lock Setting/Cancel Button

Displays possibititiy of monitor operation.

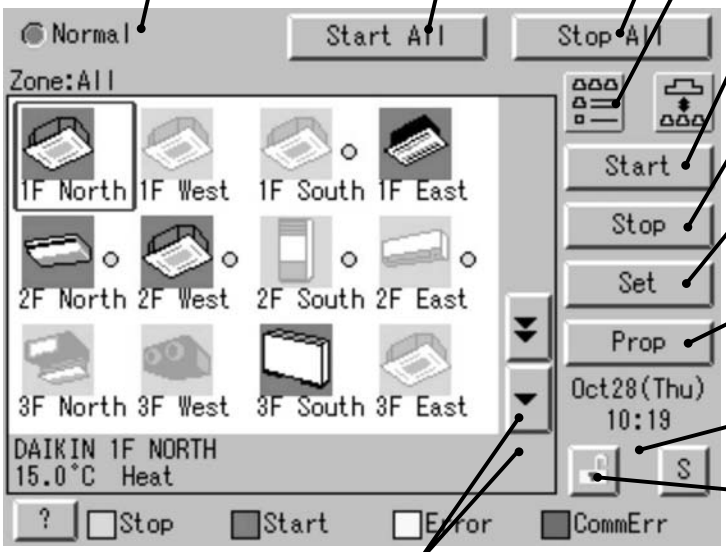

Scroll Buttons

Up/Down scroll button used when monitoring zone/group which are not currently displayed.
Left/Right scroll button used when monitoring temperature and errors etc.
Which are not currently displayed.

EM04A055A

Contents of the List Currently Displayed

- When Group List is displayed
  "Zone: Zone Name"
- When Zone List is displayed
  "Zone List Display"

Zone/Group Currently Displayed

The name of the zone/group currently selected is highlighted in blue frame.

Display Mode Selection

Press the button ana display change between Zone and Group.

System Condition Displayed Domain

Domain displaying system condition (Compulsory Stop etc.).

Filter/Element Sign

Displayed when there is any air conditioner showing a filter or element sign in the zone or the group.

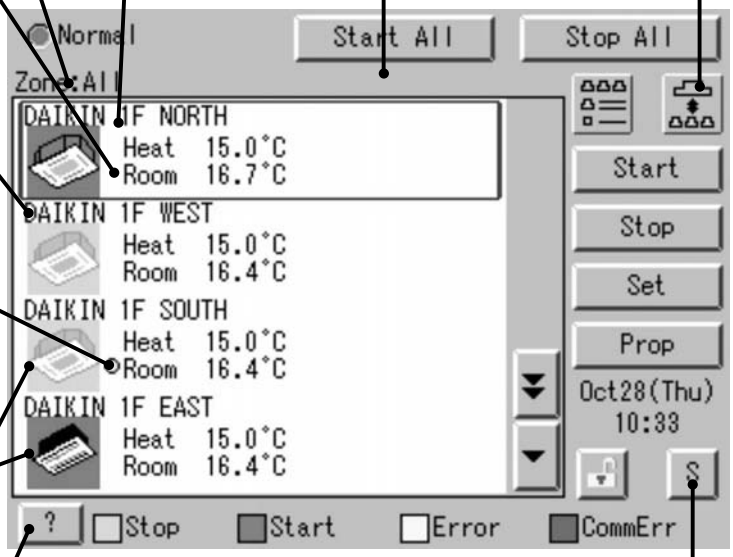

Zone/Group Name

Set the names in the Group Registration or Zone Registration in the System Setup Mode.

Target of Automatic Control

Displayed when there is any air conditioner with the registration of scheduled in the zone or in the group.

Displayed Abnormality in Air Conditioner or Communication

Blue triangular mark shows communication abnormality in air conditioner.
Yellow triangular mark shows abnormality in air conditioner.

Monitoring Screen Legend

Pressing the "?" button shows more detailed legend.

Button to Switch to the System Setup Mode

Use this button for settings including the time, group, zone and schedule.

Display for Collective Monitoring of Air Conditioners Connected to intelligent Touch Controller

When operation is normal and any air conditioner is in operation:
Red/Normal
When operation is normal and all air conditioners are in stoppage:
Green/Normal
When there is any air conditioner generating an error:
Yellow/Abnormal
When there is any air conditioner with communication error:
Blue/Abnormal
Change in color of Start/Stop is possible by Iconcolor Settings in System Settings.

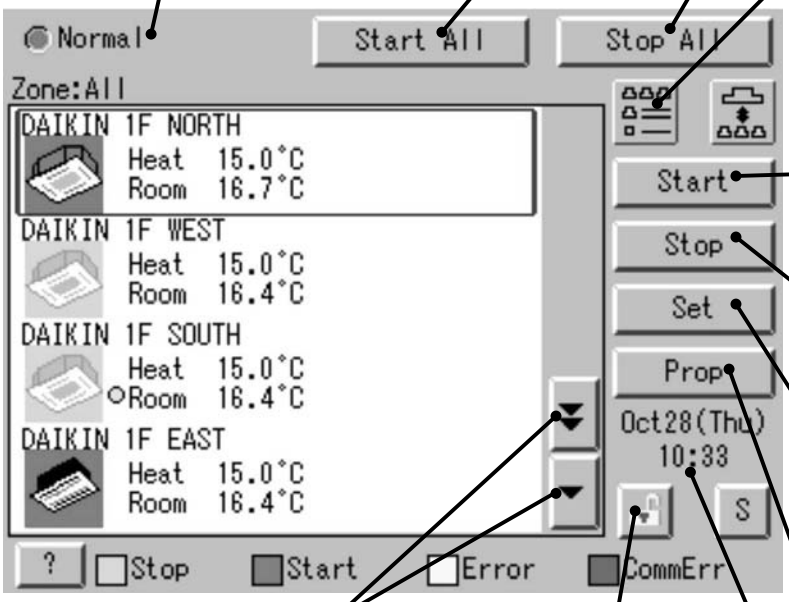

Start All Button

Button to collectively start all the air conditioners connected to intelligent Touch Controller.

Stop All Button

Button to collectively stop all the air conditioners connected to intelligent Touch Controller.

Display Mode Selection

Select the mode among icon/list/detailed icon.

Group/Zone Start Button

Button to start operation of the group/zone selected.

Group/Zone Stop Button

Button to stop operation of the group/zone selected.

Group/Zone Set Button

Makes settings (temperature setting, temperature control mode, etc.) and display of the group/zone selected.

Group/Zone Prop Button

Detailed display of the group/zone selected

Current Time Display

Shows the current date and time.

Scroll Buttons

Up/Down scroll button used when monitoring zone/group which are not currently displayed.
Left/Right scroll button used when monitoring temperature and errors etc.
Which are not currently displayed.

Lock Setting/Cancel Button

Displays possibititiy of monitor operation.

EM04A055A

■ **List**

Contents of the List Currently Displayed

- When Group List is displayed "Zone: Zone Name"
- When Zone List is displayed "Zone List"

Zone/Group Name

Set the names in the Group Registration or Zone Registration in the System Setup Mode.

Target of Automatic Control

Displayed when there is any air conditioner with the registration of scheduled in the zone or in the group.

Filter/Element Sign

Displayed when there is any air conditioner showing a filter or element sign in the zone or the group.

Monitoring Screen Legend

Pressing the "?" button shows more detailed legend.

Zone/Group Currently Displayed

The name of the zone/group currently selected is highlighted in light-blue.

System Condition Displayed Domain

Domain displaying system condition (Compulsory Stop etc.)

Display Mode Selection

Press the button and display change between Zone and Group.

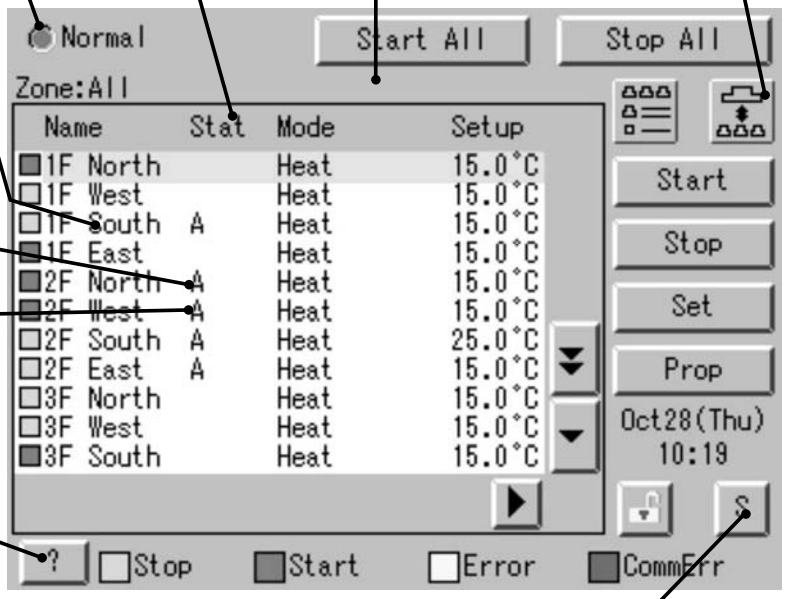

Button to Switch to the System Setup Mode

Use this button for settings including the time, group, zone and schedule.

Display for Collective Monitoring of Air Conditioners Connected to intelligent Touch Controller

When operation is normal and any air conditioner is in operation:
Red/Normal
When operation is normal and all air conditioners are in stoppage:
Green/Normal
When there is any air conditioner generating an error:
Yellow/Abnormal
When there is any air conditioner with communication error:
Blue/Abnormal
(Change in color of Start/Stop is possible by Iconcolor Settings in System Settings.)

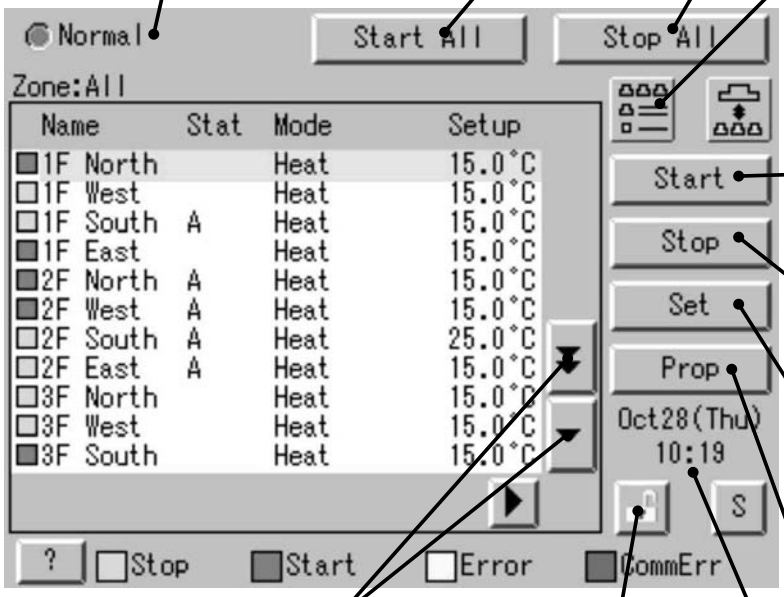

Start All Button

Button to collectively start all the air conditioners connected to intelligent Touch Controller.

Stop All Button

Button to collectively stop all the air conditioners connected to intelligent Touch Controller.

Display Mode Selection

Select the mode among icon/list/detailed icon.

Group/Zone Start Button

Button to start operation of the group/zone selected.

Group/Zone Stop Button

Button to stop operation of the group/zone selected.

Group/Zone Set Button

Makes settings (temperature setting, temperature control mode, etc.) and display of the group/zone selected.

Group/Zone Prop Button

Detailed display of the group/zone selected

Current Time Display

Shows the current date and time.

Scroll Buttons

Up/Down scroll button used when monitoring zone/group which are not currently displayed.
Left/Right scroll button used when monitoring temperature and errors etc.
Which are not currently displayed.

Lock Setting/Cancel Button

Displays possibititiy of monitor operation.

EM04A055A

25.1.3 System Outline

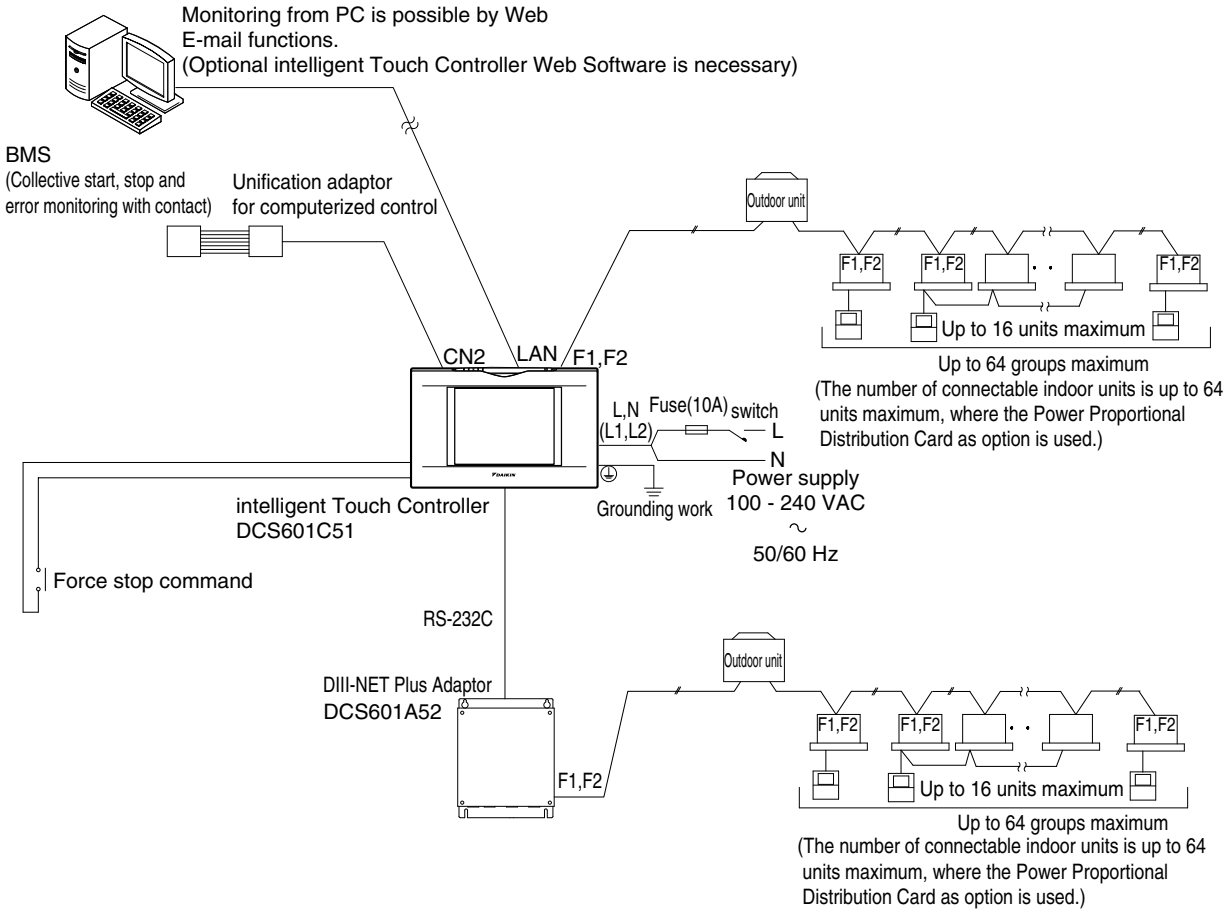

Connecting Unification adaptor allows using the contact for normal and abnormal operation signal and collective start/stop with a contact. For details, contact the vendor you purchased the product from.
Also, by connecting DIII-NET Plus Adaptor, it is possible to operate and monitor the indoor units of 64 groups (intelligent Touch Controller plus DIII-NET Plus Adaptor–128 groups in total) additionally.

25.1.4 Double intelligent Touch Controllers

Using two intelligent Touch Controllers allows centralized control of indoor units from different places.

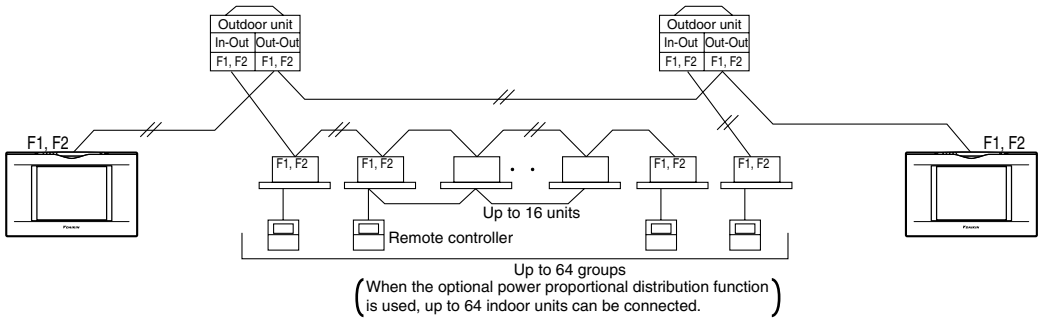

Note:
For combination and settings for double intelligent Touch controllers, be sure to consult the vendor.

25.1.5 Specification

Name		intelligent Touch Controller (DCS601C51)	DⅢ-NET Plus Adaptor (DCS601A52)
Power supply		Externally supplied 100 V AC-240 V AC 50/60 Hz	Externally supplied 100 V AC-240 V AC 50/60 Hz
Installation method condition for use		Use of the optional JIS 4-block wall embedded box (KJB411A)	—
Operating condition	Surrounding temperature/humidity	0˚C to 40˚C/less than 85% RH (if no condensation)	-10˚C to +40˚C/less than 90% RH
Dimensions	(W × H × D)	230 × 147 × 107 (mm)	157 × 190 × 42 (mm)
Overseas certification	Safety of Information Technology Equipment	IEC60730 (including IEC60335)	IEC60730 (including IEC60335)
	Interference (EMC)	EN55022 Class-A , EN55024	EN55022 Class-A , EN55024
LCD Panel	Size/no. of dots/no. of colors	5.7 inches / QVGA 320 × 240 / 4096 colors	—
Communication functions	DⅢ-NET ×1	A/C equipment communication line	A/C equipment communication line
	10BASE-T	Web option	—
Input terminals	Digital input Di ×1	Forced Shutdown	—
	Pulse input Pi ×3	—	—

25.1.6 Dimensions

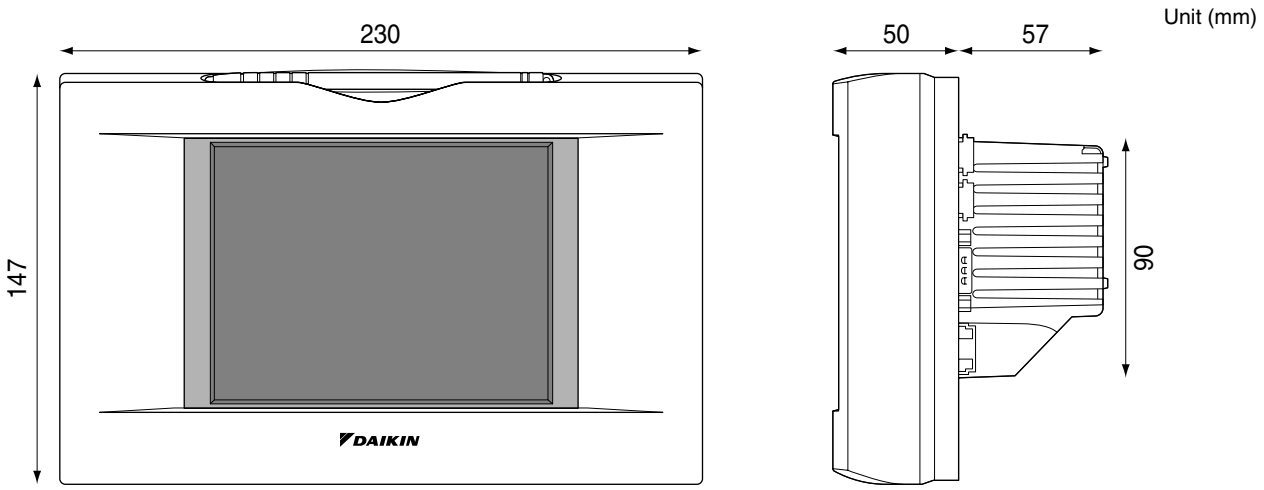

The specification and appearance of the product may be modified for improvement without prior notice.

EM04A055A

25.1.7 Functions

Centralized control device name			intelligent Touch Controller	
Product name/System name			intelligent Touch Controller main unit alone	Use with DIII-NET Plus adaptor
Model name			DCS601C51	DCS601C51+DCS601A52
Function		Details		
Wiring Limitations	No. of DIII lines (ports)	No. of F1/F2	1	2 (1+1)
	No. of controllable indoor units	No. of groups	64	128 (64+64)
		No. of units connected (Max. No. of units is 128 per DIII-NET line)	128	256
	No. of controllable zones	1 zone --- 1 group or more 1 zone --- the same setting for all of the indoor units. 1 zone is from 1 up to 64 groups	128	128
	No. of outdoor units	No. of connected units (Max. No. of 10 units per 1 DIII-NET line)	10	10×2
	Required master-slave setting when installed in multiple sites	Connectors, screens and switches	On screen: (Master/Slave)	Follows the settings of the intelligent touch controller unit
	Connector for a parent centralized setting	Determine master-slave relationship for other centralized control equipment	CN1 (Master centralized setting connector)	CN1 (Master centralized setting connector)
	Necessity of power supply	Yes / Terminal block	Yes/N-L	Yes/N-L
Operation setups	Operation		Touch panel	Operated via the intelligent touch controller touch panel
	Operation (ON)	Group	Yes	
	Stop (OFF)	Group	Yes	
	Unified ON/OFF	All connected units	Yes	
		By group/zone	Yes	
	Switching operation mode	By group/zone	Yes	
	Temperature setting	By group/zone	Yes	
	Filter sign reset	By group/zone	Yes	
	Wind direction	By group/zone	Yes	
	Fan speed	By group/zone	Yes	
	Ventilation mode	By group/zone	Yes	
	Ventilation rate	By group/zone	Yes	
	Forced OFF input	External signal: Non-voltage, normally open contact, to Main unit terminal block 0.75-1.25 mm^2 up to 150 m	Yes	Yes (Forced OFF (shut down) is input from the contact point of the intelligent touch controller main body and conducted simultaneously with shut down (forced OFF) of the A/C units connected to the intelligent touch controller unit.)
	Individual remote controller rejection/ acceptance setting	Permitted or Prohibited By group / Zone for ON/OFF, Operation mode and Temperature setting	Yes	

Centralized control device name			intelligent Touch Controller	
Product name/System name			intelligent Touch Controller main unit alone	Use with DIII-NET Plus adaptor
Model name			DCS601C51	DCS601C51+DCS601A52
Function		Details		
Monitor	Monitor	By group/zone	Yes	
		Screen display method	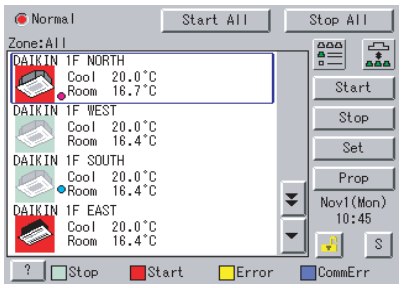 Icon/Icon details (above picture) / List	
		Icon colour, etc.	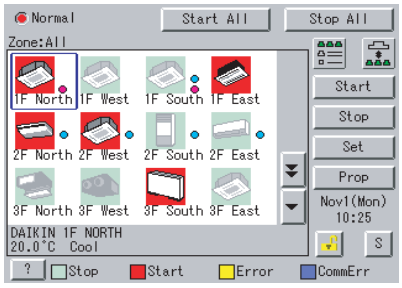 Changeable to ON (Green) and OFF (Red) using the system setting menu. During breakdowns or communication errors, a frame (highlight) as shown above is to be displayed in addition to the change in the icon colour.	
Other	Password setup	To restrict persons responsible for control operations / No. of PW	Yes/1	
		To restrict operation of monitoring screens / No. of PW	Yes/1	
	Time zone & Time setup (according to area, daylight saving, time of day)		Yes	
	Backlight setup	Auto OFF function	Yes	
	Group setup	Names and upper/lower temp. setting	Yes	
	Zone setup	Zone setting	Yes	
	Schedule setup	Weekly / By group/zone	Yes	
		Daily setting for a year (13 months) / By group/zone	Yes	
		Each day (time, minute) / By group/zone	Yes	
		Types of days schedulable	Sun-Sat + Special day 1-10 = 17 types in total	
		No. of time settings for each day set	16	
		Time No.	8	
	Changeover setup	No. of control groups	64 groups	128 groups

Centralized control device name		intelligent Touch Controller	
Product name/System name		intelligent Touch Controller main unit alone	Use with DIII-NET Plus adaptor
Model name (1 unit)		DCS601C51	DCS601C51+DCS601A52
Function	Details		
Temperature limit setup	Prevention of excessive temperature increases/decreases in unmanned rooms	Yes / 64 groups for 1 setting, 8 settings	Yes / 128 groups for 1 setting, 8 settings
Heating optimization setup	Stops fan operation in order to prevent temperature increases during the Heating mode or Thermo OFF	Yes	
Control of other facilities	ON/OFF	Di unit, Dio Unit or general purpose adaptor is required	
Touch panel correction	When touch panel is not recognized anymore	Yes	
History display	The 10 most recent breakdowns are saved for each group/zone. The 500 most recent control entries are saved.	Yes	
Version information		Yes	

25.1.8 Function Details

- **Atm Control**
  - **Schedule Setup**
  - **Change Over Settings**
  - **Temperature Limit Settings**
  - **Heating Optimization Settings**
  - **Simple linkage Setup**

  For details, refer to the following pages.

The following table describes the items mentioned above.

System Setup Menu Item	Description
Setting Schedule Outline	This menu permits you to make settings for the scheduled operations in units of zones or groups. The scheduled operations are used to automatically start or stop an air-conditioner at the date and time (year, month, day, day of the week, hour and minute) previously set in the intelligent Touch Controller according to the operating conditions of the air-conditioner. The following operations can be scheduled and controlled. ● Start/stop ● Remote control enabled/disabled ● Operation mode ● Temperature setting ● Ventilation mode (∗) ● Ventilation volume (∗) ∗ Note that these settings cannot be made depending on the model in use. The following describes a procedure for setting the schedule. ● 17 kinds of dates can be registered including the weekly settings (Sunday to Saturday) and special settings (Ex1 to Ex10). These 17 kinds of dates are registered via following Setting Calendar menu. When registering them in setting calendar, you can register 11 kinds of dates including one weekly setting (because settings from Sunday to Saturday are used as a single setting) and 10 special settings (Ex1 to Ex10). ● Calendar settings, weekly settings and special settings can be made. (Example: The weekly settings are made for regular use and special settings are made for summer holiday.)→These settings can be made for the coming 13 months. ● Lastly, concrete events can be registered on the respective 17 kinds of dates for which 7 weekly settings (Sunday to Saturday) and 10 special settings (Ex1 to Ex10) have been made. (Example: Setting for starting zone 1 at 9:00 and stopping it at 17:00) A maximum of 16 operations can be registered for each date. ● A maximum of 8 schedules can be registered when the above settings are handled as a single schedule.
	The following describes how to make the settings, showing a few examples.
Setting Zone	1. [Utilization of floors] 1F : Reception Register “1F” as a zone name. 2F : Office Register “2F” as a zone name. 3F : Canteen Register “3F” as a zone name.
Schedule Setting Calendar	2. [Make the weekly and special settings on the setting calendar menu for the above zones]

Day of the week \ Zone name		Zone 1F	Zone 2F	Zone 3F
Sunday		Holiday	Holiday	Holiday
Monday		9:30 to 18:00: Working hours	8:30 to 17:00: Working hours 12:00 to 13:00: Lunch hour 17:00 to 22:00: Overtime 22:00: Locking	9:30 to 14:30: Working hours
Tuesday		Same as above	Same as above	Same as above
Wednesday		9:30 to 17:00: Working hours	Same as above	Same as above
Thursday		Same setting as for Monday	Same as above	Same as above
Friday		Same setting as for Monday	Same as above	Same as above
Saturday		holiday	holiday	holiday
EX1	Third Saturday in every month	Handled as a weekday for attendance	Handled as a weekday for attendance	Handled as a weekday for attendance
EX2	August 1 to August 20 December 29 to January 4	holiday	holiday	holiday
EX3	December 28	9:00 to 12:00: Working hours	9:00 to 12:00: Working hours	holiday
EX4	January 5	10:00 to 15:00: Working hours	9:00 to 12:00: Working hours 12:00 to 13:00: Lunch hour	9:30 to 14:30: Working hours

EM04A055B

System Setup Menu Item	Description
Setting Scheduled Event	3. [Set events for zone 2F.]

(Note) The following lists the events for reference.
Change the settings according to the actual use conditions.

Setting events for Monday to Friday

Time	Target zone	Start/stop	Operation mode	Setting temperature	Remote control code
8:30	Zone 2F	Start	Disabled	Disabled	Assign priority to key pushed later
12:00	Zone 2F	stop	Disabled	Disabled	Disabled
13:00	Zone 2F	Start	Disabled	Disabled	Assign priority to key pushed later
17:00	Zone 2F	Disabled	Disabled	Disabled	Only stop operation permitted
22:00	Zone 2F	stop	Disabled	Disabled	Remote control operation prohibited

Setting events for Saturday and Sunday

Time	Target zone	Start/stop	Operation mode	Setting temperature	Remote control code
8:30	Zone 2F	Start	Disabled	Disabled	Assign priority to key pushed later
12:00	Zone 2F	stop	Disabled	Disabled	Remote control operation prohibited

Setting events for Ex1 (Third Saturday in every month)

Time	Target zone	Start/stop	Operation mode	Setting temperature	Remote control code
8:30	Zone 2F	Start	Disabled	Disabled	Assign priority to key pushed later
12:00	Zone 2F	stop	Disabled	Disabled	Disabled
13:00	Zone 2F	Start	Disabled	Disabled	Assign priority to key pushed later
17:00	Zone 2F	Disabled	Disabled	Disabled	Only stop operation permitted
22:00	Zone 2F	stop	Disabled	Disabled	Remote control operation prohibited

Setting events for Ex2 (Summer holiday, etc.)

Time	Target zone	Start/stop	Operation mode	Setting temperature	Remote control code
9:00	Zone 2F	Disabled	Disabled	Disabled	Assign priority to key pushed later
17:00	Zone 2F	stop	Disabled	Disabled	Remote control operation prohibited

Setting events for Ex3 (December 28)

Time	Target zone	Start/stop	Operation mode	Setting temperature	Remote control code
12:00	Zone 2F	Start	Heating	25°C	Assign priority to key pushed later Temperature setting prohibited Operation mode prohibited
17:00	Zone 2F	stop	Disabled	Disabled	Only stop operation permitted

Setting events for Ex3 (December 28)

Time	Target zone	Start/stop	Operation mode	Setting temperature	Remote control code
10:00	Zone 2F	Start	Heating	25°C	Assign priority to key pushed later Temperature setting prohibited Operation mode prohibited
12:00	Zone 2F	stop	Disabled	Disabled	Only stop operation permitted
13:00	Zone 2F	Start	Disabled	25°C	Assign priority to key pushed later Temperature setting prohibited Operation mode prohibited
15:00	Zone 2F	stop	Disabled	Disabled	Only stop operation permitted

∗ The term “Disabled” means that the setting is not changed

Change Schedule Name	4. [Change a schedule name.] This function enables you to change the existing schedule name to an easy-to-understand schedule name.
Change Special Date Name	5. [Change a special day name.] This function enables you to change the existing special holiday name to an easy-to-understand holiday name.
Enable or disable a schedule.	6. [Enable or disable a schedule.] This function finally enables you to decide whether to enable or disable the setting made.
Other Schedule Functions	7. [Convenient functions for setting a schedule]

EM04A055B

System Setup Menu Item	Description
Change Over Settings	This function allows the optimal room temperature to be maintained without the users having to change the operation mode by automatically switching the air conditioner's operation mode (cooling or heating) according to the room temperature for locations where the temperature difference during the day and at night is very large. < Overview of Function > This function automatically switches the air conditioner's operation mode and set temperature in units of one **(4) automatic cooling/heating switch group** according to the following 3 parameters: **(1) main set temperature, (2) main room temperature,** and the difference between the set temperatures when in cooling and in heating operation (listed hereafter as **(3) temperature difference**). [1] Control Method (How to determine the (1) Main Set Temperature and (2) Main Room Temperature) The 3 following methods exist for determining the above temperatures. **1.Fixed Air Conditioner Method** The first indoor unit (the one highest on the screen) among those registered in the automatic cooling / heating switch group is designated the main indoor unit and the set temperature and room temperature of that indoor unit are designated the main set temperature and main room temperature. Note, however that if the main indoor unit is in fan operation mode, its automatic cooling / heating switch group cannot be controlled. **2.Operating Air Conditioner Selection Method** Starting with the first indoor unit (the one highest on the screen) of those registered in the automatic cooling / heating switch group and working down, a search is performed to find an indoor unit which is both operating and in either cooling, heating, or automatic operation mode. The first one which satisfies both of these conditions is designated the main indoor unit and the set temperature and room temperature of that indoor unit are designated the main set temperature and main room temperature. If none is found which satisfies these conditions, the main set temperature and main room temperature are determined using the Fixed Air Conditioner Method shown above. **3.Average Method** All the indoor units which are registered in the automatic cooling / heating switch group, are operating, and are either in cooling, heating, or automatic mode are found, and the averages for their set temperatures and room temperatures are calculated and used as the main set temperature and main room temperature. (Decimals are rounded up.) Note, however, that if there no air conditioners among the registered air conditioners for the averages to be calculated, the main set temperature and main room temperature are determined using the Fixed Air Conditioner Method shown above. [2] (3) Temperature Difference The temperature difference is the difference between the set temperatures when automatically switching between cooling and heating when using this control. The temperature difference is set to between 1°C and 7°C in 1°C units. (When shipped from the factory, the setting is 2°C.) [3] (4) Automatic Cooling / Heating Switch Group ● This control is performed using one automatic cooling / heating switch group as a unit. ● Up to 128 indoor unit groups can be registered in one automatic cooling / heating switch group. ● It is not possible to register the same indoor unit to multiple automatic cooling / heating switch groups. ● Up to 128 automatic cooling / heating switch groups can be registered in this unit. ● These controls can be enabled and disenabled for each individual automatic cooling / heating switch group. (These controls only work for groups set as enabled.) ● A mark indicating that the indoor unit is under automatic control will appear on the monitor screen.

EM04A055B

System Setup Menu Item	Description
Change Over Settings	

< Control Implementation Conditions >

The relationship between the main room temperature, the main set temperature, and the operation mode is described below, with examples.
(Two examples are given, as the operation differs for temperature differences 2°C and below and 3°C and above.)
The controls are implemented when the control conditions are satisfied, every 5 minutes from the time the power is turned on.

< Implementation conditions when the temperature difference is 2°C or lower.>
(The figure below is for a temperature difference of 1°C)

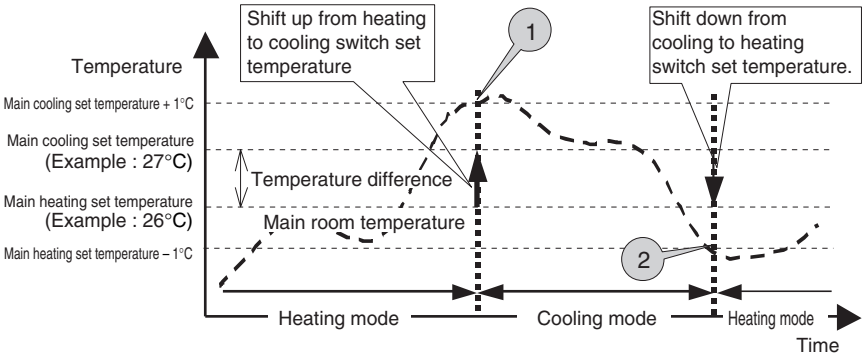

①Conditions for switching from heating to cooling :
Main room temperature > main set temperature + temperature difference + 1°C
(Example : 28.1°C > 26°C + 1°C + 1°C)
②Conditions for switching from cooling to heating :
Main room temperature < main set temperature – temperature difference – 1°C
(Example : 24.9°C < 27°C – 1°C – 1°C)

<Implementation conditions when the temperature difference is 3°C or higher.>
(The figure below is for a temperature difference of 3°C)

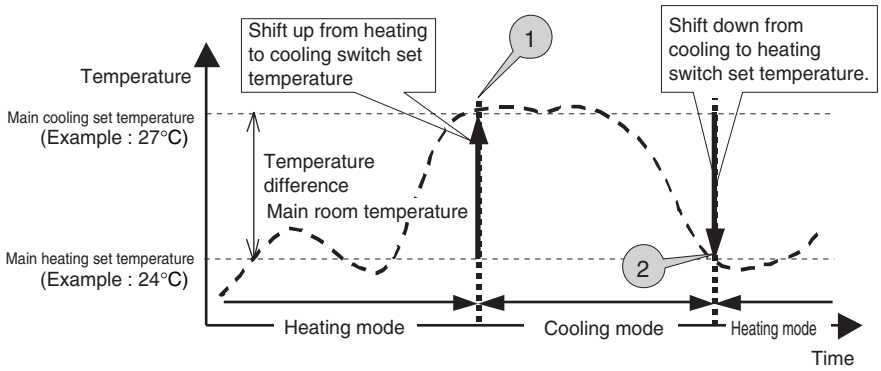

①Conditions for switching from heating to cooling :
Main room temperature > main set temperature + temperature difference
(Example : 27.1°C > 24°C + 3°C)
②Conditions for switching from cooling to heating :
Main room temperature < main set temperature - temperature difference
(Example : 23.9°C < 27°C – 3°C)

∗ See the next page for a detailed description of the instructions to the air conditioner.

EM04A055B

System Setup Menu Item	Description
Change Over Settings	The control instruction is sent to the indoor units registered in the automatic cooling / heating switch group when the control implementation conditions shown on the previous page are satisfied. The actual control instructions sent differ according to the control method setting (fixed air conditioner / operating air conditioner selection / average) and the satisfied conditions (switch from cooling to heating, etc.). The control instructions for each situation are shown below.

<Instructions sent to indoor units when control is implemented>

1.Fixed air conditioner/operating air conditioner selection methods

The control instructions are determined by the operation mode of the main indoor unit and the main set temperature. Instructions regarding the operation mode and the set temperature, shown below, are sent to all the indoor units registered in the group once all the control implementation conditions on the previous page are satisfied.

When conditions are met for switching from heating to cooling

		Instructions to indoor units registered in the automatic cooling / heating switch group	
		Operation mode	Set temperature
Operation mode of the main indoor unit	Heating / Automatic heating	cooling	main unit setting temperature+temperature difference
	Cooling / Automatic cooling	cooling	main unit setting temperature

When conditions are met for switching from cooling to heating

		Instructions to indoor units registered in the automatic cooling / heating switch group	
		Operation mode	Set temperature
Operation mode of the main indoor unit	Cooling / Automatic cooling	heating	main unit setting temperature–temperature difference
	Heating / Automatic heating	heating	main unit setting temperature

For this control, when the operation mode of the main indoor unit is automatic, whether it is automatic cooling mode or automatic heating mode is checked when judging the control conditions. Once the instructions have been determined, either a cooling or a heating instruction is sent to indoor units in automatic operation mode. (They switch from automatic to cooling or heating.)

2. Average Method

Unlike the fixed air conditioner and operating air conditioner selection methods, the set temperature is decided based on considerations of the current set temperature for each individual unit, without sending the same instruction based on the main indoor unit to all the air conditioners. When implementing the control, the following operation modes and set temperature instructions are executed.

When conditions are met for switching from heating to cooling

		Instructions to indoor units registered in the automatic cooling / heating switch group	
		Operation mode	Set temperature
Current indoor unit operation mode	Heating / Automatic heating	cooling	Current set temperature+temperature difference
	Cooling / Automatic cooling	No instruction	No instruction
	Other than the above	cooling	main unit setting temperature+temperature difference

When conditions are met for switching from cooling to heating

		Instructions to indoor units registered in the automatic cooling / heating switch group	
		Operation mode	Set temperature
Current indoor unit operation mode	Cooling / Automatic cooling	heating	Current set temperature-temperature difference
	Heating / Automatic heating	No instruction	No instruction
	Other than the above	cooling	main unit setting temperature–temperature difference

EM04A055B

System Setup Menu Item	Description
Change Over Settings	

<Precautions when using this control>

1.Do not use the set temperature restriction function in indoor units which are subject to control.
If it is used, operation modes will be switched and the set temperature will be changed repeatedly, **possibly causing the air conditioners to break down.** Caution

2.The following will happen if a communication error (the icon on the screen is blue) occurs in the air conditioner being controlled.

2-1.Fixed air conditioner
If the main unit experiences a communication error, the automatic cooling / heating switch group control will not happen.

2-2.Operating Air Conditioner Selection Method
Remove the air conditioner experiencing the communication error from selection as the main unit, and select an air conditioner with normal communication.

2-3.Average Method
Remove the air conditioner experiencing the communication error from the calculation for the average, and only use air conditioners with normal communication for calculating the average.

3.Control which matches the main unit's operation mode
(Control for when the operation mode of the main unit does not represent the automatic cooling / heating switch group.)
It is possible that only the operation mode for the main unit is changed when control using this function is done based on the main group unit (when the control method is fixed air conditioner or operating air conditioner). The following control is performed because it is possible that the operation mode of air conditioners other than the main unit in the group might be in violation of the purpose of control and not automatically switch if the conditions for implementing control using this function are not satisfied.

[Example] Heating Mode-Matched Control
When the main unit is already operating in heating mode, whether or not the conditions for implementing a switch from cooling to heating (main room temperature < main set temperature – temperature difference) depends on the state (environment) of the main unit. (If only the main unit is in heating operation, it is possible that the room temperature might not rise because of the indoor units other than the main unit which are in cooling operation, and the above control conditions might not be satisfied.)
Therefore, only when control is performed based on the main group unit is the control below performed depending on the operation mode of the main group unit.

Cooling Mode-Matched Control

		Instructions to indoor units registered in the automatic cooling / heating switch group	
		Operation mode	Set temperature
State of main unit (control conditions)		Cooling	main set temperature
Operation mode	Cooling / Automatic cooling		
Temperature	Main room temperature>main set temperature		

Heating Mode-Matched Control

		Instructions to indoor units registered in the automatic cooling / heating switch group	
		Operation mode	Set temperature
State of main unit (control conditions)		Heating	main set temperature
Operation mode	Heating / Automatic heating		
Temperature	Main room temperature<main set temperature		

EM04A055B

System Setup Menu Item	Description
Change Over Settings	4.Because this control automatically switches the operation mode, if the air conditioner is not a cooling / heating free unit, always register indoor units which have the right to select cooling or heating for the same cooling system to the same automatic cooling / heating switch group, when controlling indoor units which do not have such rights. Unexpected things may happen if control is done using the following incorrect automatic cooling / heating switch group settings. 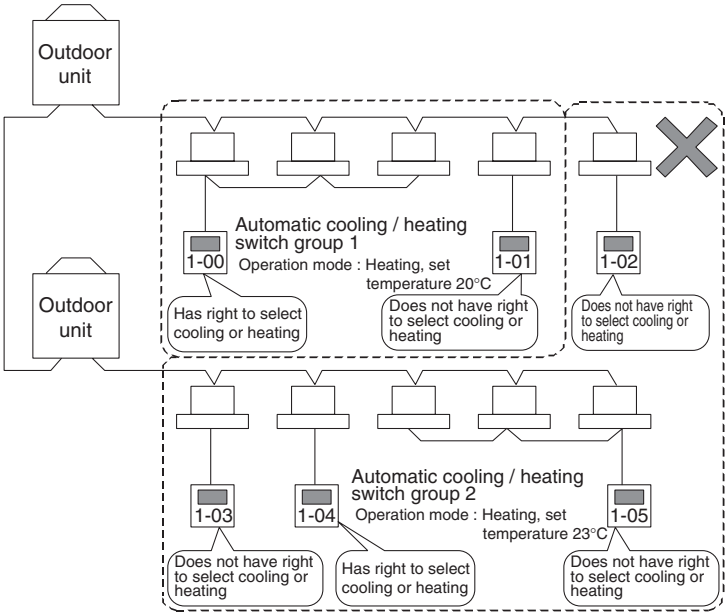 If indoor units (address 1-02) which do not have the right to select cooling or heating for the same cooling system are not registered to the same automatic cooling / heating switch group, address 1-02 will behave in the following way. [Actions related to operation mode] If the room temperature of Group 1 rises, group 1 will switch to cooling as per this control and the set temperature will become 25°C (if the temperature difference is 5°C). When this happens, the set temperature of the indoor unit at 1-02 will continue at 23°C although only the operation mode will change to cooling, i.e. in a different operation mode from the other indoor units in Group 2. →The operation mode will be determined by Group 1. [Actions regarding set temperature] If the room temperature of Group 2 rises, group 2 will switch to cooling as per this control and the set temperature will become 28°C (if the temperature difference is 5°C). When this happens, the operation mode of the indoor unit at 1-02 will continue in heating and only the set temperature will change to 28°C, i.e. in a different operation mode from the other indoor units in Group 2. →The set temperature will be determined by Group 2.

EM04A055B

System Setup Menu Item	Description
Temperature Limit Settings	This function automatically starts and stops air conditioners in order to prevent the room temperature of unmanned rooms from getting too high or too low. For example, This has the following advantages. ● It prevents overheating of or condensation from forming on equipment which needs to be temperature controlled in unmanned rooms. ● It can also help buildings and not just individual rooms to preserve heat by preventing unmanned rooms from reaching extremes of temperature at night. <Overview of Function> This function performs automatic control by monitoring the relationship between the set upper and lower limits and the room temperature (the air conditioner intake temperature) to prevent the set room temperature from exceeding those limits. This function starts and stops the air conditioners and changes the operation mode. ● **Cooling operation control (and stop control)** Cooling operation is automatically started when the room temperature rises above the set upper temperature limit. The air conditioner is stopped once the room temperature falls sufficiently far below the upper temperature limit (upper temperature limit – 4°C or more) during cooling due to this control. ● **Heating operation control (and stop control)** Heating operation is automatically started when the room temperature falls below the set lower temperature limit. The air conditioner is stopped once the room temperature rises sufficiently far above the lower temperature limit (lower temperature limit + 4°C or more) during heating due to this control. ① : Controlled air conditioners ● This controls auto-start and auto-stop for each air conditioner based on the temperature set for each room temperature limit control group. ● This control is not applicable to air conditioners which are already operating, even if they are registered to the room temperature limit control group. (It is only applicable to stopped air conditioners.) ● Up to 128 indoor groups can be registered in one room temperature limit control group. ● It is not possible to register the same indoor unit to multiple room temperature limit control groups. ● Up to 8 room temperature limit control groups can be registered in this unit. ● These controls can be enabled and disenabled for each individual room temperature limit control group. (These controls only work for groups set as enabled.) ● A mark indicating that the indoor unit is under automatic control will appear on the monitor screen. ② : Upper room temperature limit ● **Upper and lower room temperature limit** The upper and lower room temperature limits desired for automatic control. The settable range of upper and lower limits is as follows. **Upper limit** : 34°C to 50°C in 1°C units. (The default is 36°C.) **Lower limit** : 2°C to 14°C in 1°C units. (The default is 14°C.) The temperature different between the upper or lower limit and the room temperature when the air conditioner under cooling (heating) operation control using this function (to prevent hunting) is 4°C.

EM04A055B

System Setup Menu Item	Description
Temperature Limit Settings	③ : Control Implementation Conditions The relationship between room temperature, upper / lower limit, and operation mode is shown below. The controls are implemented when the control conditions are satisfied, every 5 minutes from the time the power is turned on. 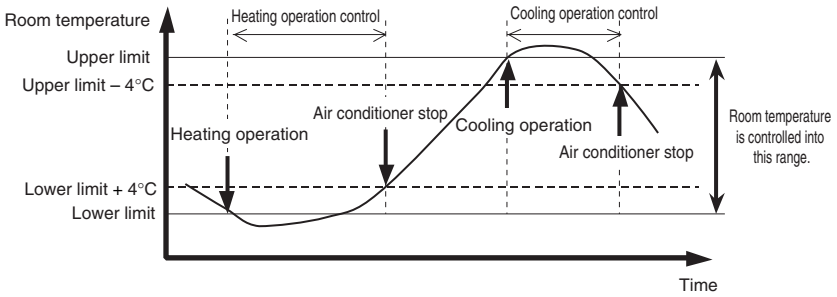 This function performs stop control for cooling / heating operation and other operation controls to prevent excessive increase or decrease of the room temperature. The set values of room temperature upper / lower limit control group are used for the upper / lower limit values and other factors of this control. This control is not performed for the group of air conditioners to which this control is set invalid. The set temperatures of the air conditioners are not changed by this control. ①**Start condition of cooling operation :** Cooling operation is controlled when the room temperature is higher than the upper limit of room temperature and the unit is stopped. ②**Start condition of heating operation :** Heating operation is controlled when the room temperature is lower than the lower limit of room temperature and the unit is stopped. ③**Stop condition :** The air conditioners under cooling / heating control by this function stop when any of the following conditions are met. ● **During cooling operation** “Room temperature is lower than the upper limit of room temperature – 4°C” or “Room temperature is lower than the cooling set temperature” ● **During heating operation** “Room temperature is higher than the lower limit of room temperature + 4°C” or “Room temperature is higher than the heating set temperature”

EM04A055B

System Setup Menu Item	Description
Temperature Limit Settings	④ : Precautions for the use of this control The operation modes are switched over automatically with this control. Therefore, if the air conditioners are not cooling / heating-free machines, and when an indoor unit without cooling / heating selection right is to be controlled, be sure to register an indoor unit with cooling / heating selection right in the same cooling system into the same room temperature upper / lower limit group. If the control is performed with a wrong setting of room temperature upper / lower limit control group as shown in the figure below, the following unexpected control will be performed. 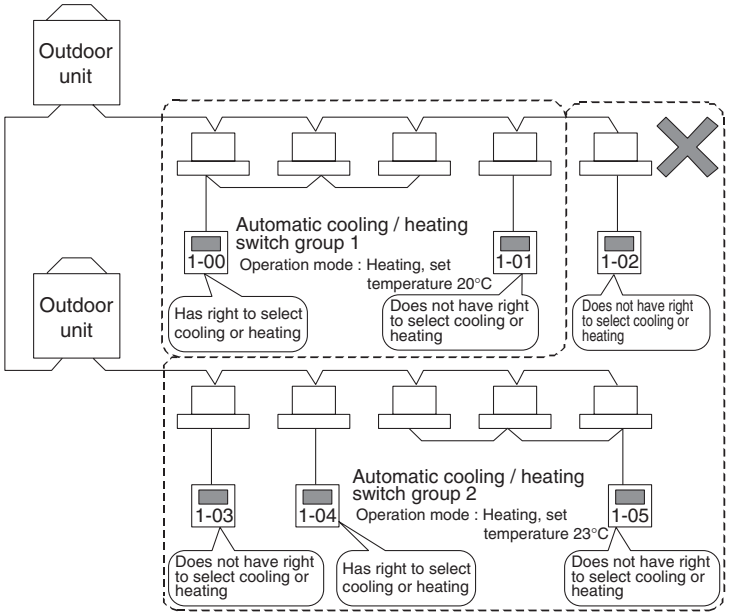 As shown in the figure above, if an indoor unit (address 1-02) not having the cooling / heating selection right is not registered into the same room temperature upper / lower limit control group with an indoor unit having cooling / heating selection right in the same cooling system, the operation of the address 1-02 will be as follows. [Actions related to operation mode] When the room temperature of the group 1 rises, the operation mode of the group 1 is switched to cooling operation by this control, and the automatic operation continues. At this time, only the operation mode of the indoor unit 1-02 changes into cooling mode, and operates in the mode different from other indoor units. →The operation mode will be determined by Group 1.

EM04A055B

System Setup Menu Item	Description
Heating Optimization Setting	With the air conditioners made by Daikin (*VRV* outdoor unit or *VRV* indoor unit), when the thermo-switch is turned off (the compressor is off) during heating operation, the fan does not stop. (It continues to run at the minimum speed, or at the speed set in the heating mode.) Also, because a slight amount of refrigerant continues to circulate at this time, the room temperature may rise slightly by the fan operation described above. Therefore, this function starts / stops the air conditioner based on the room temperature (intake air temperature) and the set temperature during heating operation to prevent the temperature rise. <Overview of Function> ● **Operation interruption control** When the room temperature for the air conditioner in heating operation becomes higher than the set temperature + 1°C, the air conditioner is stopped. However, because the stop control (operation interruption) by this function is the optimum control for turning off of the thermo-switch during heating operation, the system regards this status as in operation, and the screen display on the unit remains "In-operation." ∗After the unit is interrupted by this function, it restarts when the specified conditions are met. Therefore the user's explicit stop command is effective. ● **Operation restart control** When the room temperature for the air conditioner under the stop control by this function (during heating operation interruption) becomes lower than the set temperature – 1°C, the air conditioner is restarted. ① : Controlled air conditioners ● This control is performed for each individual air conditioner. This function can be set to enabled / disabled for each air conditioner. ● Only the air conditioners with this function set to enabled becomes the subject for the control. ● For the indoor units under this control, a mark showing the automatic control is displayed on the monitoring screen.

EM04A055B

System Setup Menu Item	Description
Heating Optimization Setting	② : Control execution condition The relationship between room temperature, set temperature, and operation / stop status is shown in the figure below. The operation period of the control is every 5 minutes after the system power is turned on, and the operation is executed when the control conditions are met at each timing. 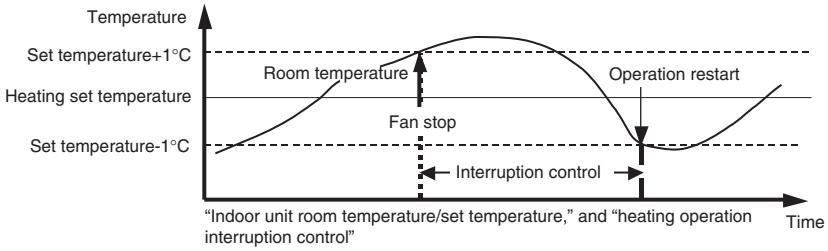 "Indoor unit room temperature/set temperature," and "heating operation interruption control" This function performs start / stop control based on the relationship between the set temperature and the room temperature (intake air temperature) of the air conditioner in heating operation. The control conditions are described below. **Operation interruption control in heating mode (Stop control)** When the room temperature for the air conditioner in heating operation becomes higher than the set temperature + 1°C, the air conditioner is stopped. The stoppage (operation interruption) by this control is processed as "in-operation of the air conditioner" on the monitoring screen of the unit. **Operation restart control in heating mode (start control)** When the room temperature for the air conditioner in interruption becomes lower than the set temperature – 1°C by this function, the air conditioner is restarted. **Enabled-to-disabled change over control (start control)** When the setting of this function for the air conditioner is changed from enabled to disabled during operation interruption, the operation is restarted. **Operation mode change over control (Start control)** When the operation mode of the air conditioner in interruption is changed by this function, the air conditioner is restarted. ③ : Precautions for the use of this control 1.The stoppage (operation interruption) by this control is processed as "in-operation of the air conditioner" on the monitoring screen of the unit. As a result, this status is indicated as "Stop" on the remote controller of the air conditioner, and as "In-operation" on the monitoring screen of the unit. 2.As explained above (item 1), because the display on the remote controller during operation interruption by this control is "Stop," the user may not perform the stop operation even at the scheduled time of system stoppage, resulting in forget-to-stop error. Therefore, it is recommended that a measure against forget-to-stop error be executed by the scheduled control of the unit or other appropriate methods.

EM04A055B

System Setup Menu Item	Description
Simple Interlock Setting	This menu is used to make settings of an interlock control function in units of zones or groups. The simple interlock control is a function to automatically control groups or zones corresponding to a change of the operation states or the stop states in any groups. The settings of the simple interlock control are described below. • The simple interlock can store a maximum number of 128 program registrations. For each program, the following settings can be made : • **Interlock input point** The target groups you want to monitor as the interlock input points (e.g. air-conditioning unit, Di unit*, Dio unit*, Heat Reclaim Ventilator) are registered. * : Monitoring is performed for the input states at the operation / stop connection point. In one program, the maximum number of 128 groups can be registered. • **Interlock output** "Select conditions of interlock input points", "Registration of control targets", and "Settings of control details" are performed. • "Select condition of interlock input points" The interlock control function is initiated when the groups specified as the interlock input points indicate the operation states described below. Select from (1)-(5) to specify the condition. (The control function is actually initiated when the state of the input point has changed.) (1) No detection : Detection of inputs is not performed. (The control function is not effective.) (2) Any one or more of the groups ON : When any one or more of the groups registered as the input points turn on, the control function is initiated. (3) All ON : When all of the registered groups as the input points turn on, the control function is initiated. (4) Any one or more of the groups OFF : When any one or more of the groups registered as the input points turn off to stop, the control function is initiated. (5) All OFF : When all of the registered groups as the input points turn off to stop, the control function is initiated. ***1 Selecting "Any one or more of the groups ON (or OFF)" while some interlock input points are already ON (or OFF) will not initiate anew the interlock control function even when another interlock input point turns ON (or OFF). (Once the selected condition has become invalid and then, when the selected condition is satisfied again, the function can be initiated.)** ***2 When a communication error occurs in any of the interlock input points, the condition will be checked only for the interlock input points in the normal communication state.** • "Registration of control targets" A single group or zone, which is to be controlled when the interlock condition is met, is registered. ∗ **If the interlock condition has been met during a communication error in the control target, the interlock control function will not be initiated even when the communication error is cleared.** • "Settings of control details" Details of the control operations for the target device where the interlock condition is met are defined. The available control operations are described below. Multiple operations can be set at a time. (Ex. : Start Command and Change Temperature Setting) • Start / Stop commands • Operation mode switching • Change temperature setting • Setting of permission / prohibition of hand-held remote controller operations (Start / Stop, Temperature setting, Operation mode switching) • Ventilation mode switching (∗) • Ventilation amount switching (∗) ∗ for Heat Reclaim Ventilator For one interlock program, two interlock outputs at the maximum can be specified.

EM04A055B

System Setup Menu Item	Description
	Control operations when a communication error occurs in the interlock input points

Example 1) When a communication error occurs in any of the interlock input points, the condition will be checked only for the interlock input points in the normal communication state.

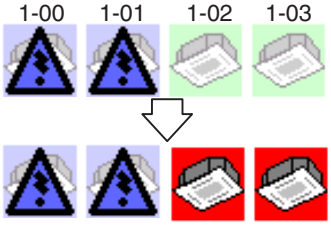

When "All ON" is selected, the state change shown in the left figure can initiate the interlock control function.

Example 2) Even if the interlock input point recovered from the communication error meets the specified condition, the interlock control function cannot be initiated.

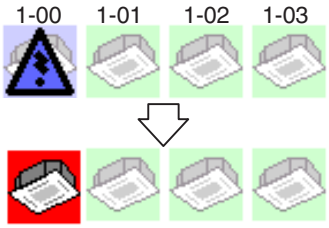

When "Any one or more of the groups ON" is selected, the state change shown in the left figure cannot initiate the interlock control function.

Example 3) When a communication error occurs in an interlock input point and, consequently, the specified condition is met, the interlock control function cannot be initiated.

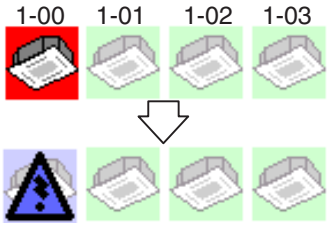

Even when "All OFF" is selected, the state change shown in the left figure cannot initiate the interlock control function.

Control operations when a communication error occurs in the control target equipment

Condition of interlock input points :
"All ON" is selected.

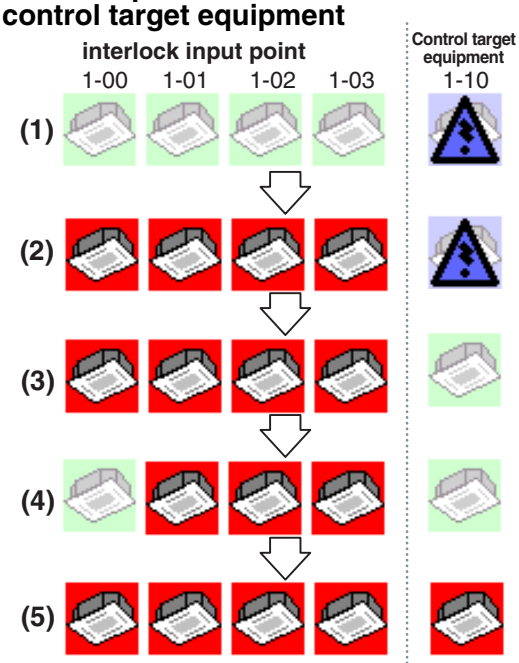

(1) The condition of interlock input points is not met.

(2) Although the condition of interlock input points is met, the communication error in the control target will not allow initiating the interlock control function.

(3) Even when the control target recovers from the communication error, the interlock control function is not initiated.

(4) In this case, once the condition of interlock input points has become invalid and then, when the condition is satisfied again, the interlock control function can be initiated.

(5)

EM04A055B

System Setup Menu Item	Description

In the following section, utilization of the simple interlock control function is described while giving some examples.
Referring to the figure below, the setting examples of the simple interlock control program are provided.

[Example 1 of interlock control]
When any of the air-conditioning units on the second floor (1-00, 1-01) start operating, Heat Reclaim Ventilator (1-02) will be started. When all of the air-conditioning units (1-00, 1-01) on the second floor stop, Heat Reclaim Ventilator (1-02) will be stopped.

[Example 2 of interlock control]
When the key of the first floor (2-03)∗ is locked, the air-conditioning units (2-00 to 2-02) will be stopped and start/stop operations of the hand-held remote controller will be prohibited.

∗ : The mark shown in the figure below represents a key. In this example, locking the key to the Di unit allows a closing (ON) connection point to be connected.

● Before the interlock control is activated

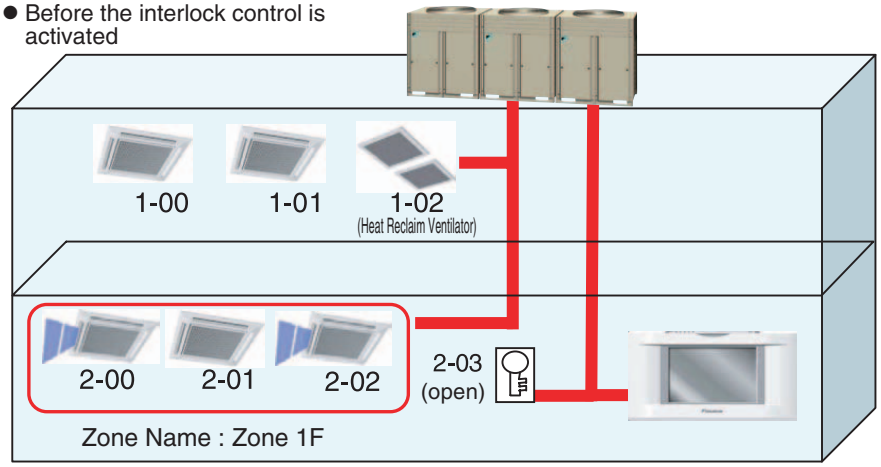

Air-conditioning unit (1-00) in operation
Di unit (2-03) locked

● While the interlock control is active

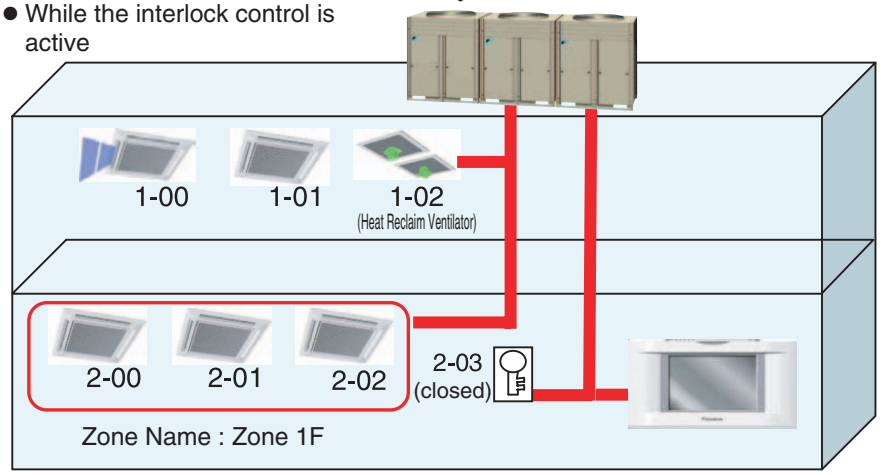

Settings for performing the control operations described above

Interlock Program Number	Interlock input point	Interlock Output 1			Interlock Output 2		
		Input Condition	Control Target	Control Item	Input Condition	Control Target	Control Item
Program 1 (two interlock operations)	1-00 1-01	Anyone or more of the groups ON	1-02	Start operation	All OFF	1-02	Stop
Program 2 (one interlock operations)	2-03	All ON	Zone 1F	• Stop • hand-held remote controller • Prohibition of start/stop	No detection	–	–

EM04A055B

System Setup Menu Item	Description

• Limitations of the simple interlock function

In the simple interlock function, setting the inconsistent input/output conditions is allowed as described below.

∗ Priority of the interlock programs is determined in such a way that the lower program has a higher priority and the output 2 has a higher priority than the output 1.

Example 1) When the interlock input point and the control target are same

Interlock Program Number	Interlock input point	Interlock Output 1			Interlock Output 2		
		Input Condition	Control Target	Control Item	Input Condition	Control Target	Control Item
Program 1	1-00	Any one or more of the groups ON	1-00	Stop	No detection	–	–

Result : 1-00 cannot be initiated. (Even if it has been initiated, it should be stopped by the interlock control function.)

Example 2) When the interlock input point and the control target are same but the control items specify opposite operations

Interlock Program Number	Interlock input point	Interlock Output 1			Interlock Output 2		
		Input Condition	Control Target	Control Item	Input Condition	Control Target	Control Item
Program 1	1-00	Any one or more of the groups ON	1-01	Start operation	Any one or more of the groups OFF	1-01	Stop

Result : The interlock output 2 with a higher priority is executed. (1-01 stops.)

The settings of the input/output conditions as described in the example 3 below **will cause a failure of the air-conditioning unit; therefore never use these settings**.

Example 3) When the interlock input point and the control output fall into a loop

Interlock Program Number	Interlock input point	Interlock Output 1			Interlock Output 2		
		Input Condition	Control Target	Control Item	Input Condition	Control Target	Control Item
Program 1	1-00	Any one or more of the groups ON	1-01	Start operation	Any one or more of the groups OFF	1-01	Stop
Program 2	1-01	Any one or more of the groups ON	1-00	Stop	Any one or more of the groups OFF	1-00	Start operation

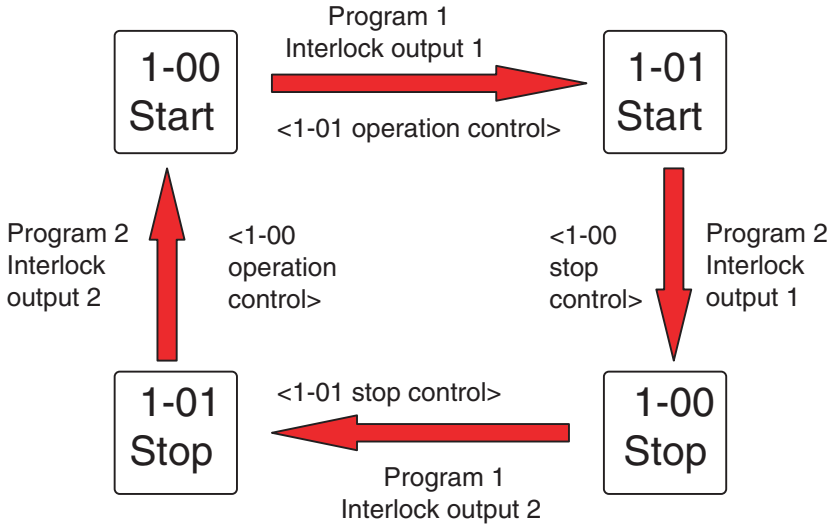

Result : The interlock program is repeated endlessly. In the example above, the air-conditioning units : 1-00 and 1-01 repeat start/stop operations endlessly.

EM04A055B

25.1.9 Terminals on the Back of intelligent Touch Controller

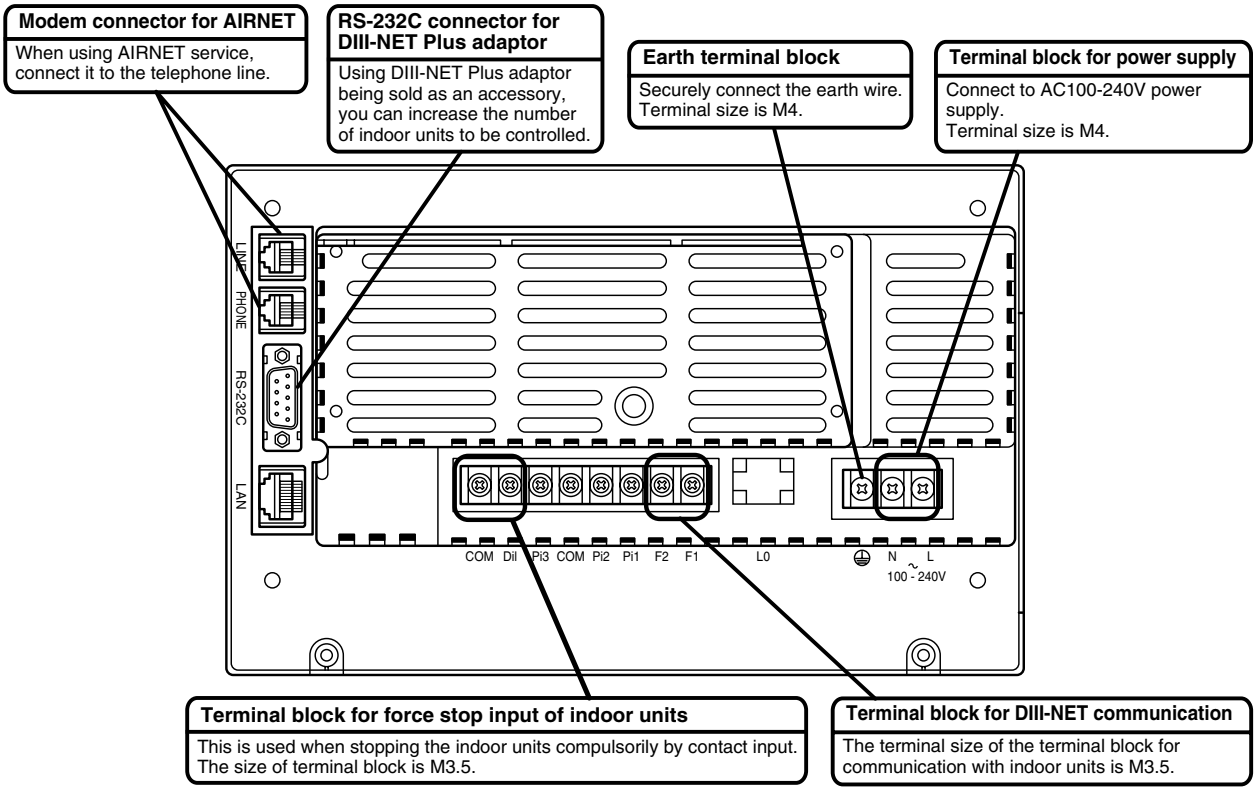

C: 3P073677-12R

25.1.10 Points of Installation

(Do not fail to use a round crimp terminal with reinforcing sleeve for safety wiring connection to the intelligent Touch Controller.)

When wiring, cut off the power supply (using a local switch) and do not apply power until all work has been finished.

Wiring for power supply and Connecting wiring for DIII-NET communication of indoor units

In order to perform centralized control of indoor units using this controller, connect the power wiring to terminals L and N, earth wire to earth terminal ⏚ and connecting wiring for DIII-NET communication of air-conditioner (indoor unit and outdoor unit) to terminals F1 and F2 respectively as shown in the figure below.

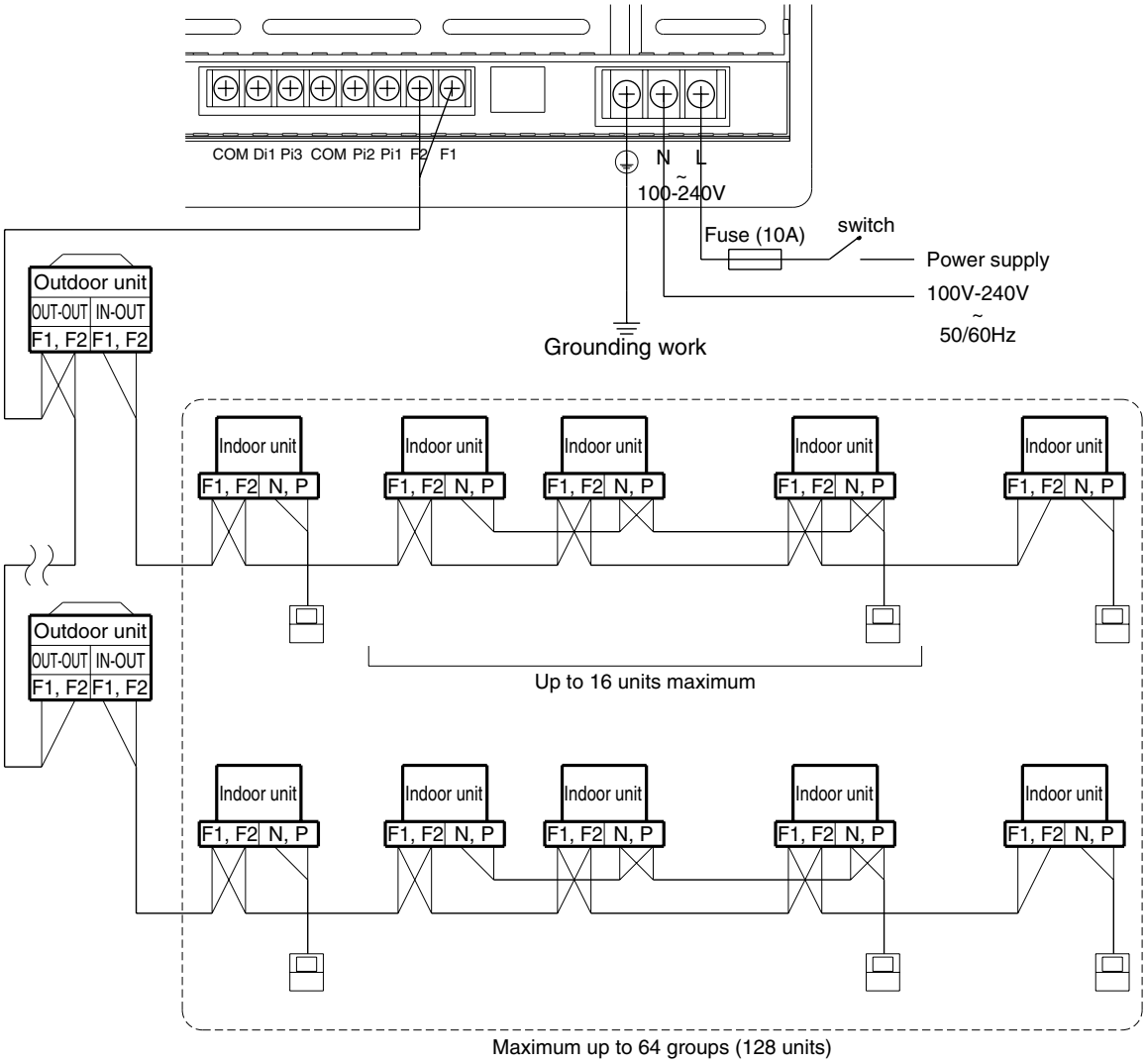

Power cable wiring	1.25mm²
Fuse	10A
Connecting wiring for DⅢ-NET communication of indoor and outdoor units	0.75 - 1.25mm² vinyl cord or cable with sheath (2 wire) ---Up to 1000m maximum (wiring length -- up to 2000m maximum) (When shield cable is used, the wiring length is available up to 1500m.)

<< CAUTION >>

- Do not fail to perform installation of grounding work. Don't connect the grounding wire to any of gas pipe, city water pipe, lightning rod, and telephone grounding wire.
- Do not turn ON the power supply (front switch) until all the works are complete.
- The connecting wiring for communication of indoor and outdoor units is a connecting wiring for the control. Do not clamp these cables together with high voltage cables. Failure to observe this instruction would cause control error.
- Do not connect the power cable to F1, F2 terminal blocks. Wrong connection to these terminal blocks could result in damage and burning of the centralized control equipment and of the electric parts of the indoor and outdoor units. This is very hazardous. Check each wired cable once more before turning ON the power switch.

25.1.11 Wiring for Force Stop Input

In order to stop the air-conditioner through force stop input, connect the wiring for force stop input to the terminals Di1 and COM as shown in the figure below.

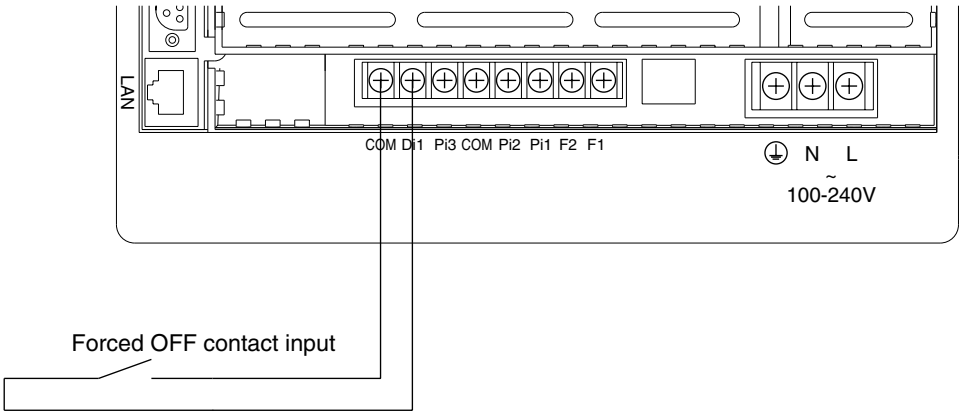

Wiring for force stop input	• 0.75 - 1.25mm² vinyl cord or cable with sheath (2 wire) -- up to 150m maximum • When FORCE-STOP INPUT is kept ON, the indoor units connected thereto are unable to be operated because they are force-stopped. • Use a contact which can guarantee minimum application load DC16V and 10mA. • Use an instantaneous contact of 200msec or more in current feed time, where required.

<< CAUTION >>

- Don't clamp these cables together with high voltage cables. Failure to observe this instruction would cause control error.
- Terminals COM are inter-connected. Connecting to either one is allowed, but the number of cables connectable to one terminal is limited to 2 pieces.
- Don't connect the power cable to Pi, Di, COM terminal blocks. Wrong connection to these terminal blocks could result in damage and burning of the centralized control equipment and of the electric parts of the indoor and outdoor units. This is very hazardous. Check each wired cable once more before turning ON the power switch.

25.1.12 Connection to Public Telephone Line

Connect to the telephone line in order to monitor the air-conditioner via AIRNET service.
Connect to modular cable from the public telephone line to the upper connector with a stamping of LINE, and connect the modular cable of the telephone to the lower connector with a stamping of PHONE, as shown in the figure below.

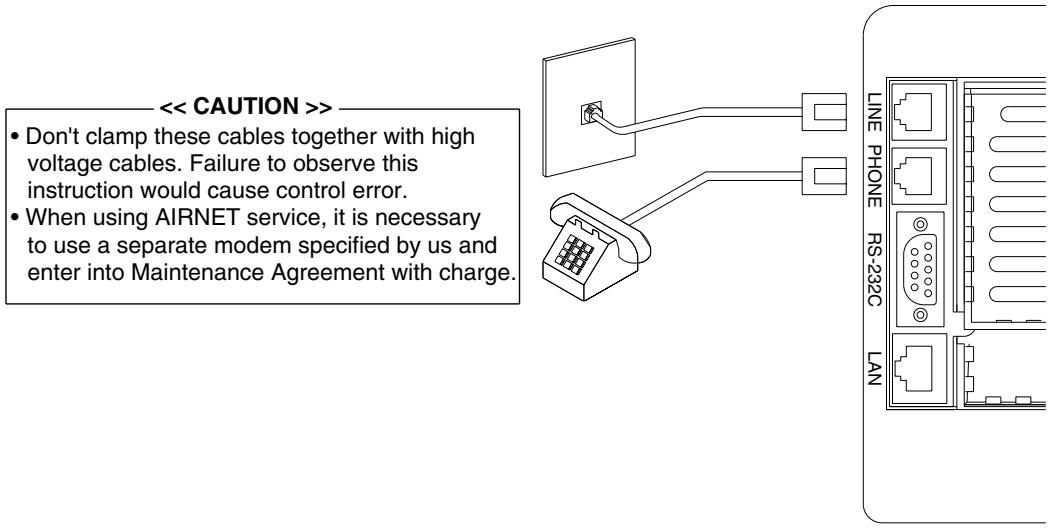

<< CAUTION >>

- Don't clamp these cables together with high voltage cables. Failure to observe this instruction would cause control error.
- When using AIRNET service, it is necessary to use a separate modem specified by us and enter into Maintenance Agreement with charge.

25.1.13 DIII-NET Plus Adaptor Connection

In order to increase the number of indoor units to be controlled, connect DIII-NET Plus adaptor using RS-232C cable attached to the adaptor.
For details, refer to the installation manual of DIII-NET Plus adaptor.

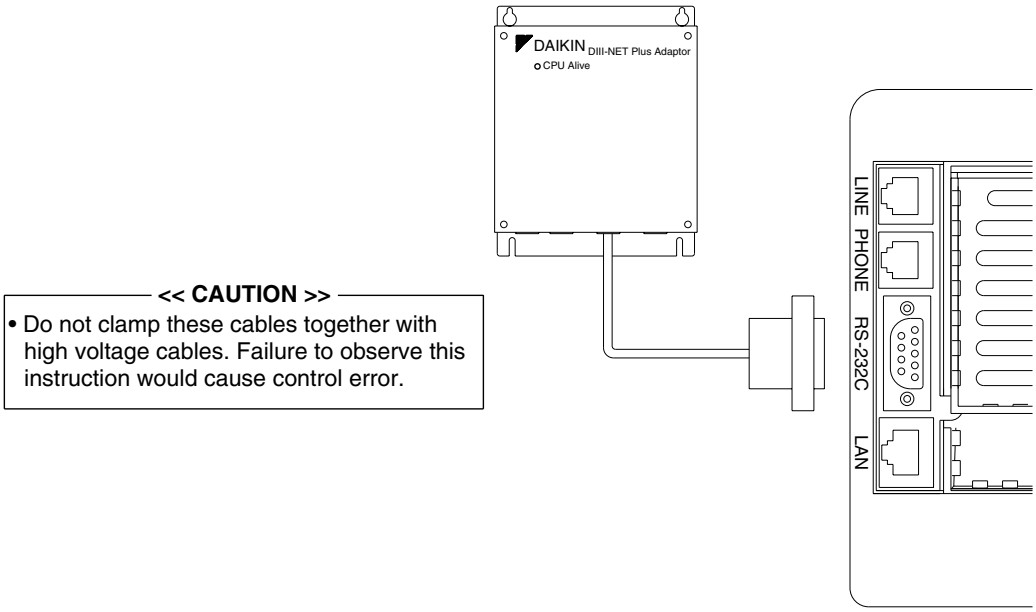

<< CAUTION >>

- Do not clamp these cables together with high voltage cables. Failure to observe this instruction would cause control error.

25.1.14 Connection for Unification Adaptor

In order to perform total start and stop/situation monitoring from BMS, etc.,
connect a Unification Adaptor sold separately.
As shown in the figure below, open the controller and connect the cable from the Unification Adaptor to CN2 connector located on the printed board on the lower case.
If you route the cable in the cable guide groove on the lower case, you can make a smart connection without any slack of the cable.

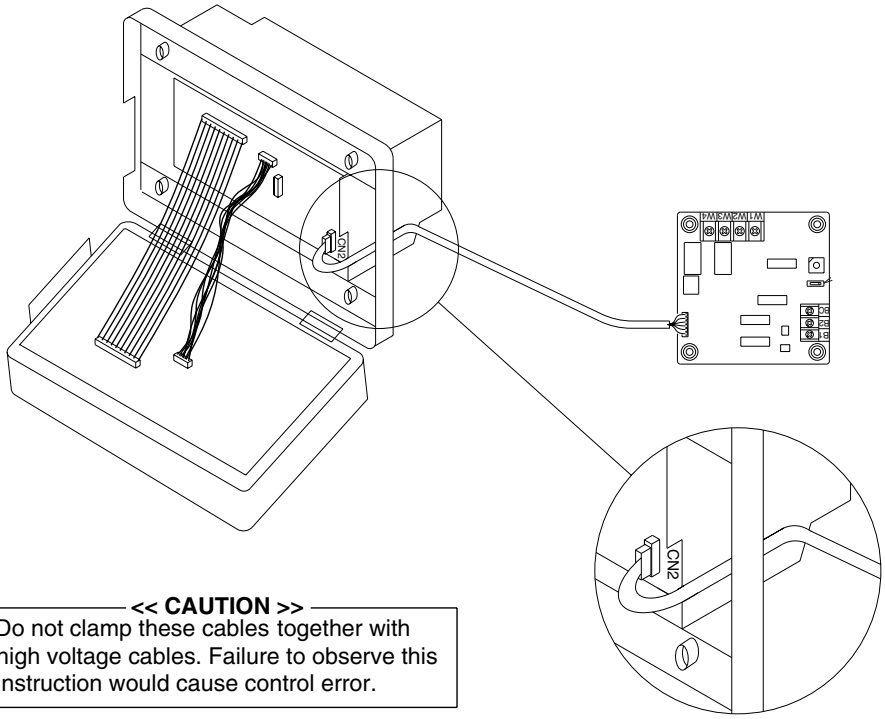

<< CAUTION >>

- Do not clamp these cables together with high voltage cables. Failure to observe this instruction would cause control error.

25.1.15 DIII-NET Plus Adaptor

- Use a round crimp terminal with reinforcing sleeve for safety wiring connection to this unit.

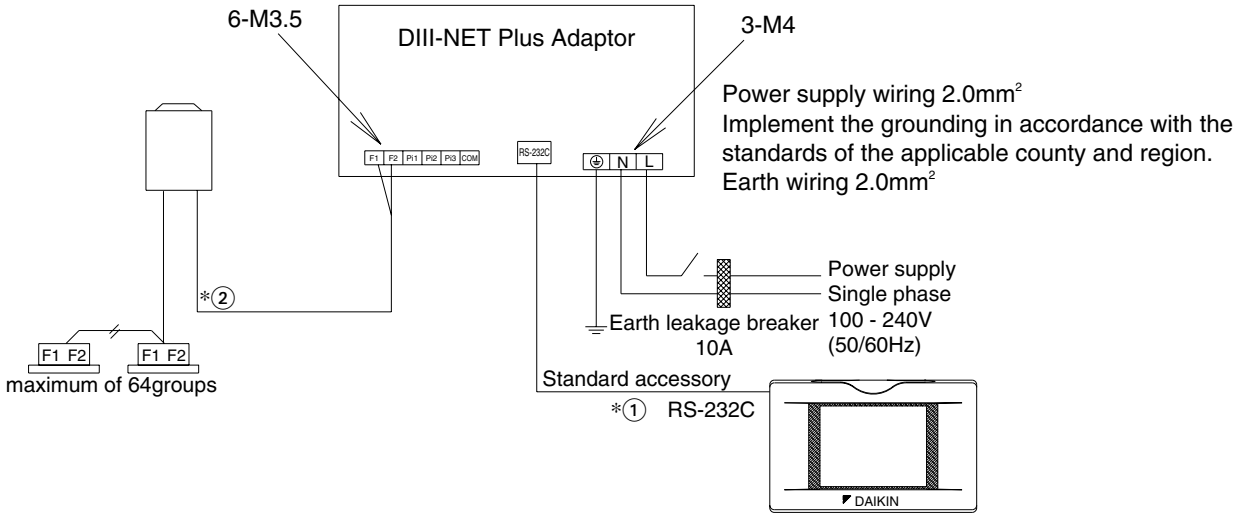

***① RS-232C wiring**

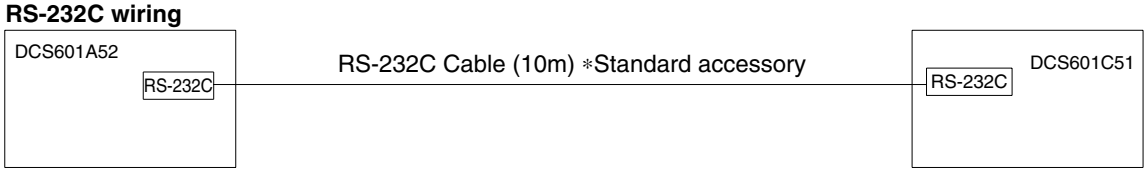

Wirings must be isolated from the power lines.

***② DIII - NET wiring**

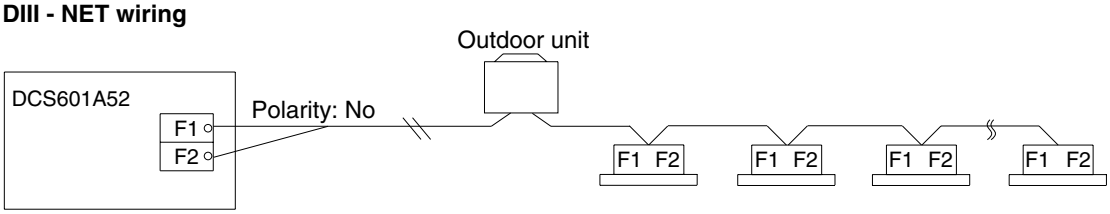

1. Do not use multicore cables with three or more cores.
2. Use wires of sizes between 0.75mm² and 1.25mm²
3. Wire length : Max 1000m
4. Do not bind the wire for DIII-NET
5. Wirings for DIII-NET must be isolated from the power lines.
6. Terminal contact size : M3.5

- How to draw local wiring should follow the following figure.

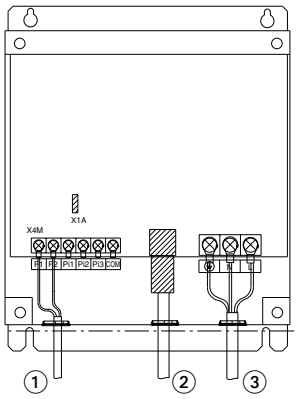

① To terminals F1, F2 of outdoor unit
② To intelligent Touch Controller (DCS601C51)

- Please put in wiring, as shown in the following figure.

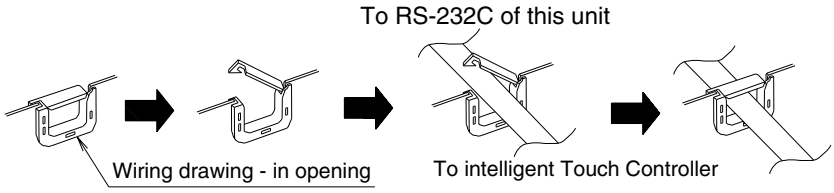

③ To 100 - 240V ~ 50/60Hz and earth

25.1.16 Wiring Example for intelligent Touch Controller <DCS601C51>

■ **intelligent Touch Controller (DCS601C51) Only**

The intelligent Touch Controller can control the air conditioning associated equipment for 64 groups.

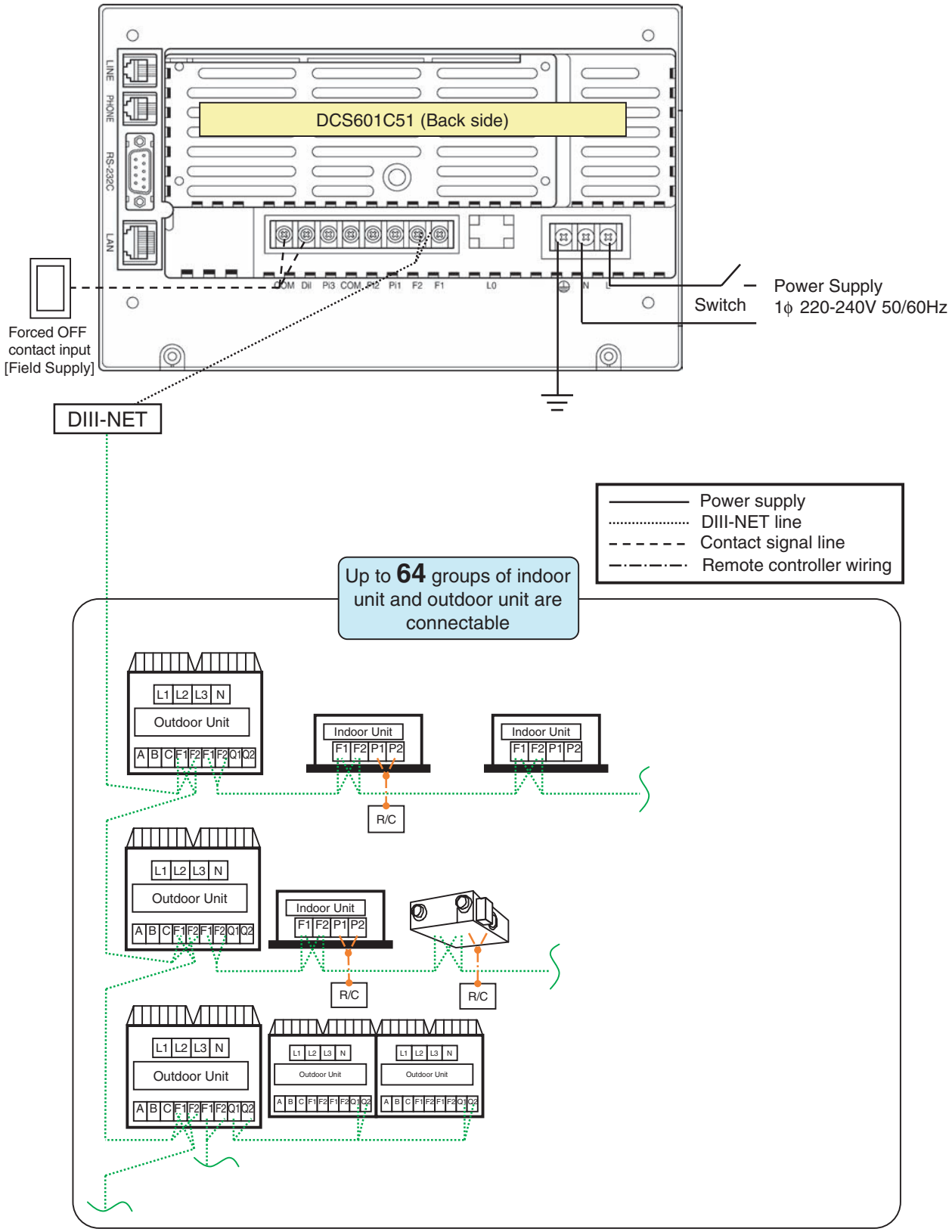

Equipment	Arrangement	Model/Spec	Remark
intelligent Touch Controller	DAIKIN	DCS601C51	Up to 64 groups can be connected

■ **The Case of DIII-NET Plus Adaptor <DCS601A52> Added**

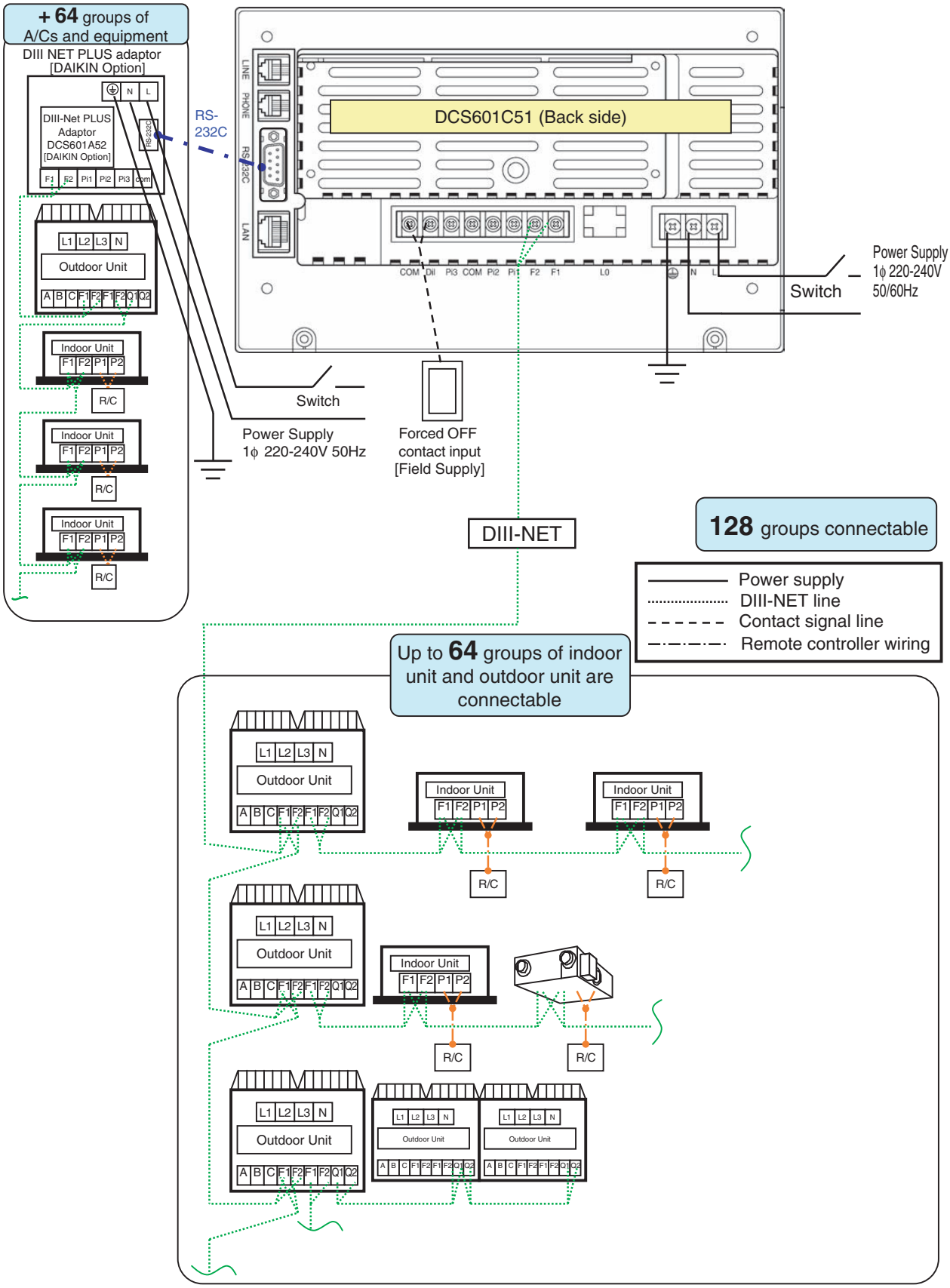

Equipment	Arrangement	Model/Spec	Remark
intelligent Touch Controller	DAIKIN	DCS601C51	Up to 64 groups can be connected
DIII-Net PLUS Adaptor	DAIKIN	DCS601A52	+64 Groups can be connected

■ **Other Air Conditioner + Di, Dio Units**

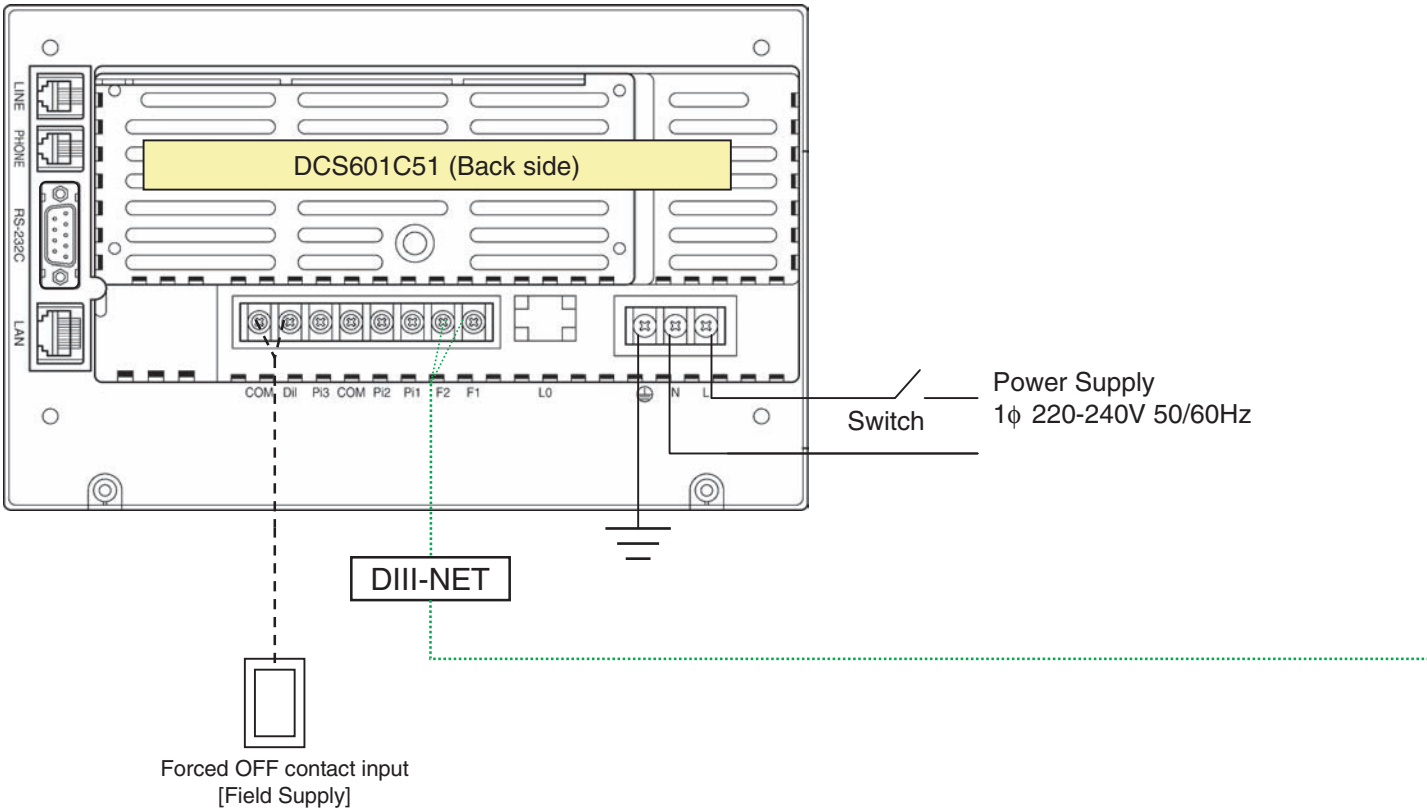

Equipment	Arrangement	Model/Spec	Remark
intelligent Touch Controller	DAIKIN	DCS601C51	Up to 64 groups can be connected
interface adaptor for SkyAir-series*	DAIKIN	DTA102A52	For SkyAir Series
Central control adaptor kit*	DAIKIN	DTA107A55	For UAT(Y)-K(A),FD-K
Dio	DAIKIN	DEC102A51	4 ports: use for connection with the equipment of the other companies
Di	DAIKIN	DEC101A51	8 ports: use for connection with the equipment of the other companies

Note:

*: Adaptors required to connect products other than those of the *VRV* System to the high-speed DIII-NET communication system adopted for the *VRV* System.

* To use any of the above optional controllers, an appropriate adaptor must be installed on the product unit to be controlled.

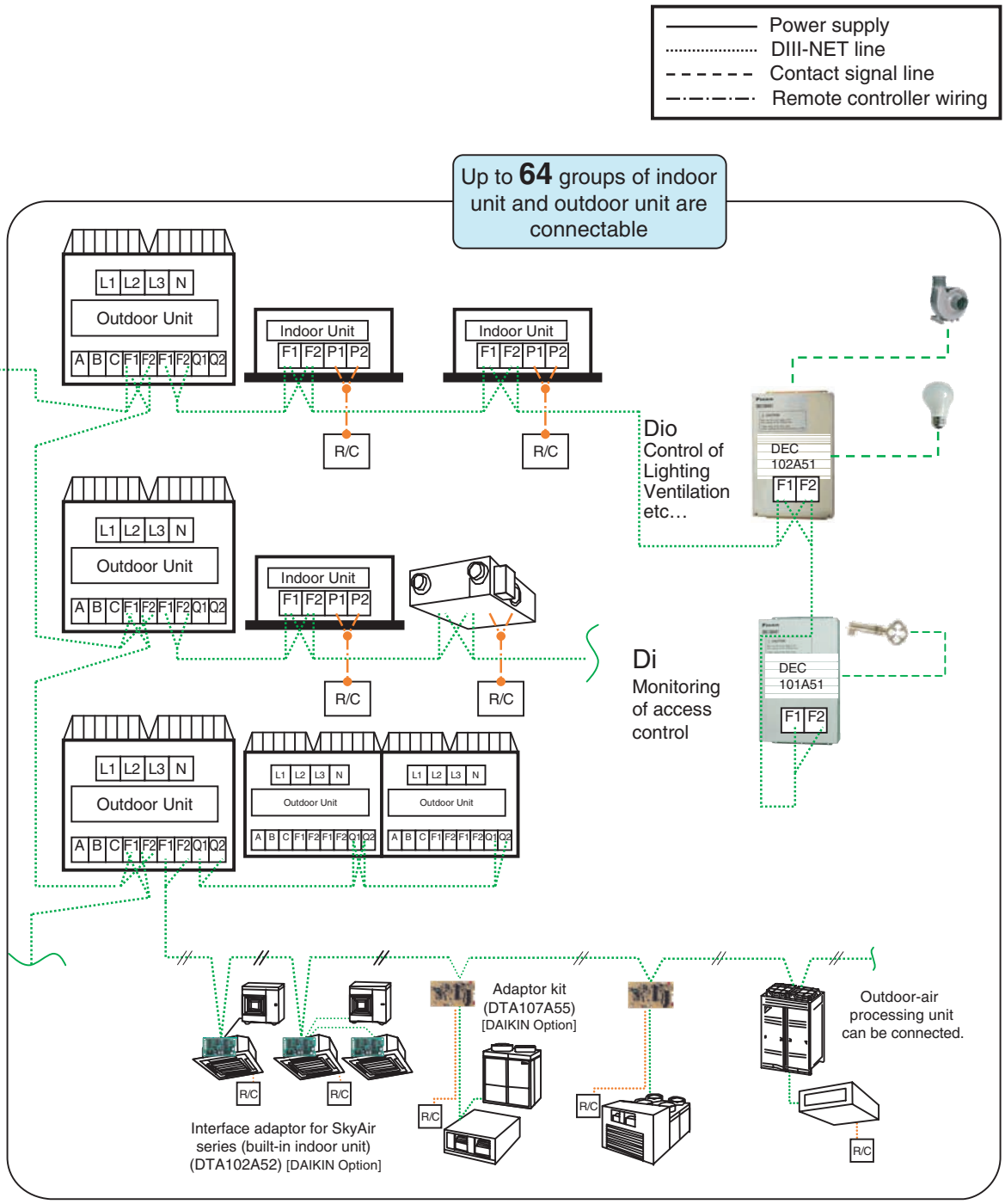
Power supply
DIII-NET line
Contact signal line
Remote controller wiring
Up to 64 groups of indoor unit and outdoor unit are connectable
L1 L2 L3 N
Outdoor Unit
A B C F1 F2 F1 F2 Q1 Q2
Indoor Unit
F1 F2 P1 P2
R/C
Dio
Control of Lighting Ventilation etc…
DEC 102A51
F1 F2
Di
Monitoring of access control
DEC 101A51
Adaptor kit (DTA107A55) [DAIKIN Option]
Outdoor-air processing unit can be connected.
Interface adaptor for SkyAir series (built-in indoor unit) (DTA102A52) [DAIKIN Option]

26. intelligent Touch Manager

26.1 Features

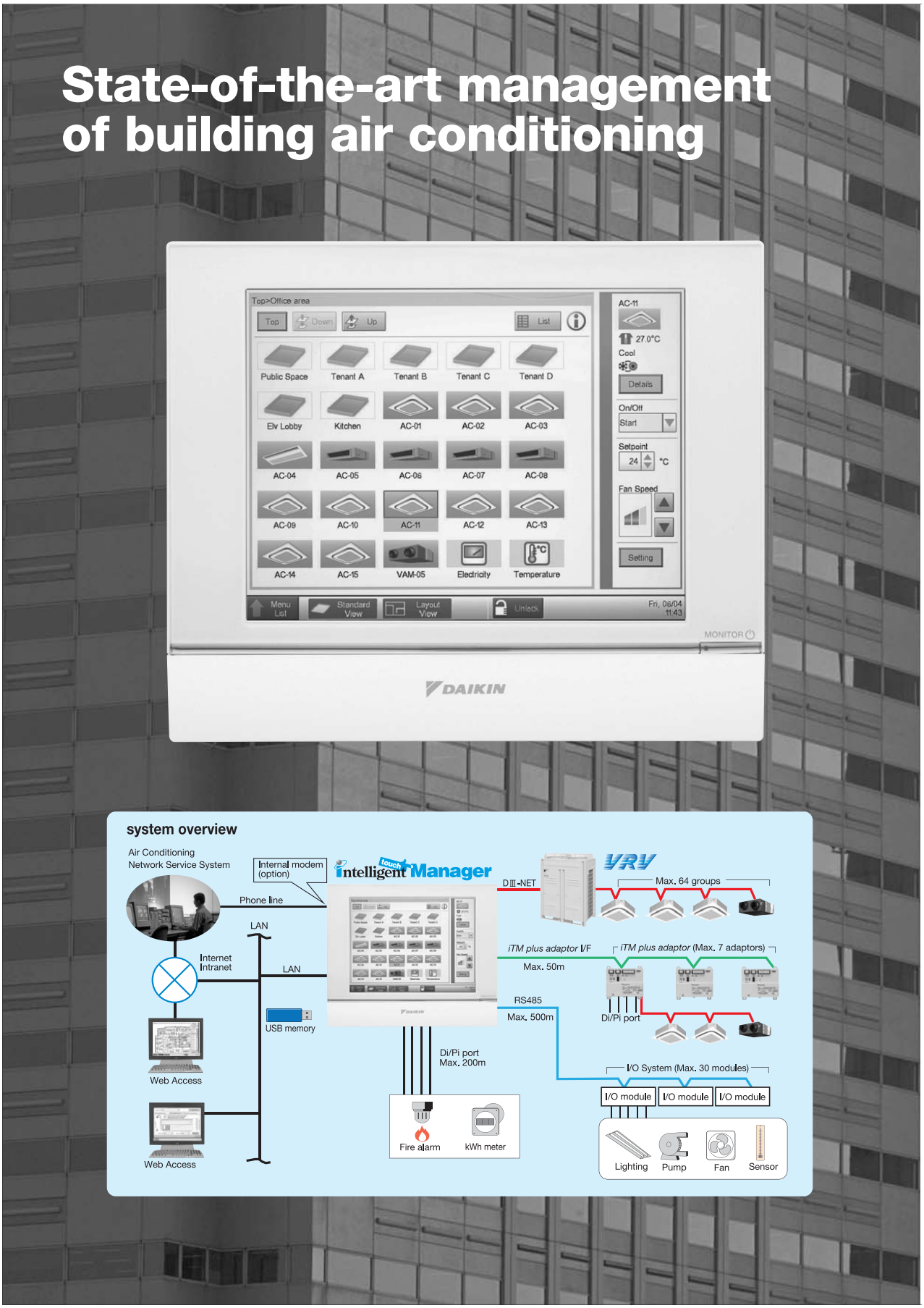

One touch selection to total air comfort

Daikin proudly introduces its new *intelligent Touch Manager*,
a VRV system controller featuring an array of simple, useful system management functions for added value.

Central control

- Handy area settings simplify detailed management of VRV.
- Display of floor plans enables a quick search of desired air conditioning units.
- Operation history shows manner of control and origin in past operations of air conditioning units.

Remote access

- Remote access with a PC allows total air conditioning management using the same type of screens as those displayed in the *intelligent Touch Manager.*
- Authorised users can centrally control individual air conditioning units from their own computers.

Automatic control

- VRVs are controlled automatically throughout the year by the schedule function.
- Interlocking VRVs and other equipment enables easy automation of building facilities operation.
- Setback adjusts temperature settings even when rooms are unoccupied.

Energy management

- The Energy Navigator feature simplifies energy management by tracking energy consumption data and identifying inefficient operation.

Troubleshooting

- Contact information of maintenance contractors can be registered and displayed.
- E-mails are sent automatically to alert of malfunctions and potential trouble.
- The *intelligent Touch Manager* can link to the Air Conditioning Network Service System for 24-hour monitoring of operating conditions and status.

Scalability

- A single *intelligent Touch Manager* can manage a small building or be expanded to handle medium- to large-sized buildings.
- Large building properties can also take advantage of the *iTM integrator* to link up and expand system up to 5 *intelligent Touch Managers* for integrated control.

intelligent touch Manager

Central control

Simple operation

Using the easily recognised icons and intuitive menu screens, even novice users can operate and monitor the system like an expert.

List view

Designed for simplicity, this menu provides a quick view of overall status and essential information in a list format. Using the sorting function, air conditioning units operating under the same conditions and status are identified for comparison and assessment.

Layout view

A special feature utilises building floor plans to provide a visual representation of system equipment.
Without having to memorise equipment names,users can visually locate any installed equipment by searching its position on the floor plan.

Language can be changed according to user needs.

Comprehensive management history

Rather than simply recording malfunctions, the *intelligent Touch Manager* provides a comprehensive history for equipment events including operation, status change, automatic control, and settings. This assists in system optimisation for additional energy savings and comfort as well as for preventive maintenance.

Easy access to a wide range of menus

Users can readily access their desired menu screens simply by touching the menu icon from the main screen.

Automatic control

System settings

Operation management

Remote access

Air conditioning control using a PC

Air conditioning units in buildings can be operated via PC.

Authorised users can operate building air conditioning equipment with a PC and have the same type of screens displayed as those displayed in the *intelligent Touch Manager*.

Air conditioning units in buildings at distant locations can also be remotely monitored and controlled.

Operating air conditioning equipment using a computer is comparable to that of the *intelligent Touch Manager*. Administrator can centrally operate and monitor individual units and systems at distant locations as if they were working in the same building.

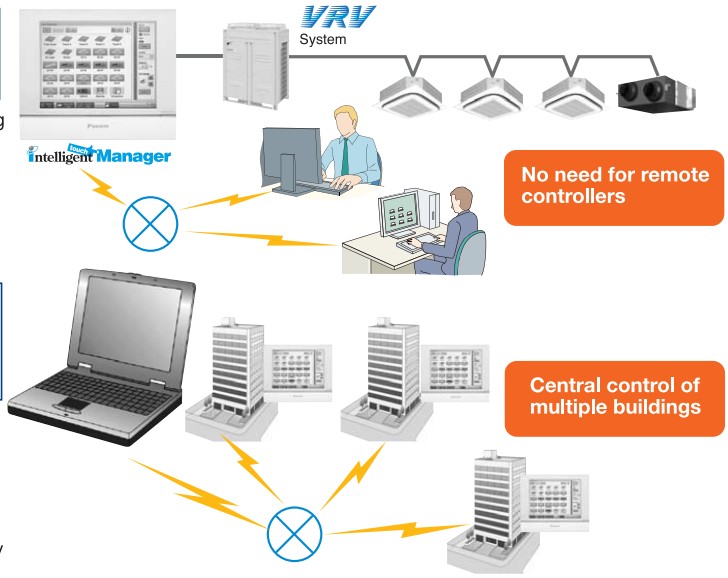

Automatic control

Automatic operation for the entire year

Calendar settings can automate daily management of air conditioning equipment for the entire year to optimise energy savings and comfort.

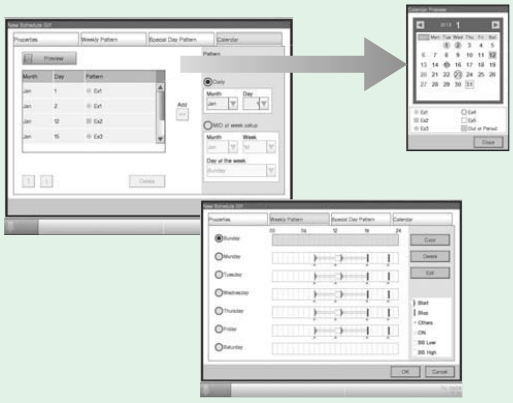

- A weekly schedule can be set for any air conditioning unit and its group.
- Administrator can also set Start/Stop, Setpoint and below conditions:
  - •Pre-Cool/Heat •Setback High/Low
  - •Remote Controller Restriction •Timer Extension
  - •Setpoint Shift •Fan Speed •Setpoint Restriction
- Holidays and special days can be set. Monthly schedule can be easily checked on the calendar.
- An expiration date can be set for each schedule. This enables a schedule pattern to be automatically changed according to the season.

Interlock variety

The *intelligent Touch Manager* offers interlock variety that extends beyond simply starting and stopping interlocks to automatic interlocks of connected units. This enables the system to control air conditioning equipment in performance of such operations as free cooling and time-delayed ventilation.

Example 1 Free cooling

When the outdoor temperature is lower than the predetermined temperature, the cooling operation stops, and outdoor air is directly introduced through the ventilation unit to save energy.

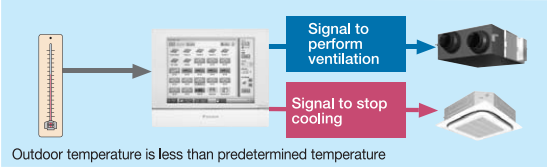

Example 2 Ventilation control

Ventilation equipment is controlled depending on the indoor CO_2 levels. Air conditioning losses attributed to unnecessary ventilation are reduced while maintaining appropriate use of indoor air and enabling energy savings.

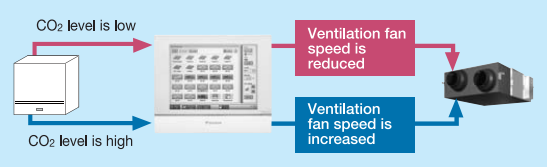

Example 3 Air conditioning interlock according to room occupancy status

Key control systems and occupancy sensors are employed to detect room occupancy status and automatically perform setback or stop operations for unoccupied rooms depending on settings.

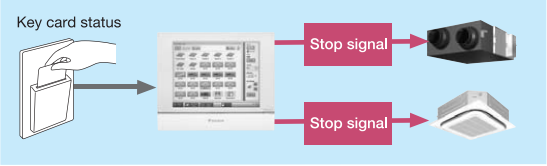

Interlock variety enables greater functionality between air conditioning equipment and peripheral equipment.

intelligent touch Manager

2

Emergency stop for localised fire protection areas

By interlocking fire alarms, the system can perform an emergency stop of air conditioning and ventilation units and execute for either all air conditioning units or only affected fire protection areas.

Having centralised control to perform an emergency stop on localised fire protection areas offers building managers of multi-tenant buildings a choice for maximising safety of affected areas without disrupting activities of those areas that are unaffected.

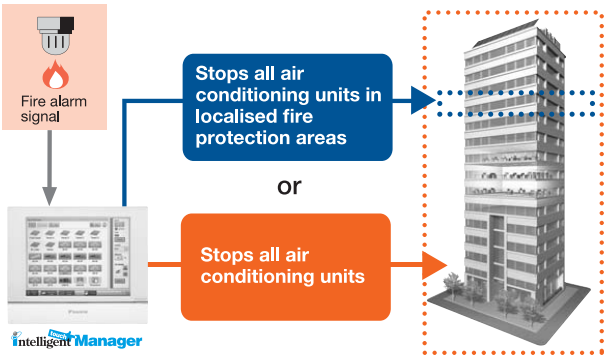

Comfortable energy-saving control

Automatic changeover

Cooling/heating operations of each room can be automatically changed based on setpoint and room temperature.

* In the case of heat pump type VRV, cooling/heating operations can be changed at the same time for the entire VRV system.

Setback

Unoccupied rooms such as offices at night have no need for maximum air conditioning operation to maintain a suitable room environment. The setback feature scales back air conditioning in unoccupied rooms to prevent unnecessary energy consumption and provide lower electricity costs.

Timer Extension

To conserve energy when rooms are left unoccupied, the system has an automatic stop operation for air conditioning units that turns down the air conditioning after a predetermined time. This can be a true energy saver for a variety of building types including school classrooms.

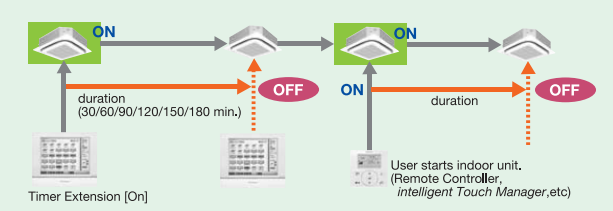

Sliding Temperature

This function is designed to change setpoint to reduce differences between the outdoor and indoor temperatures. Particularly useful at building entrances and similar locations, this function effectively prevents a “heat shock” from exposure to a sudden drop in temperature and can also enhance energy savings.

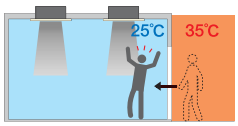

Heat shock is likely to occur when differences between indoor and outdoor temperatures are substantial.

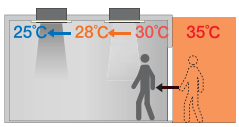

Heat shock can be prevented by providing a gradual decline in temperature that minimises the steep differences between indoor and outdoor temperatures near entrances.

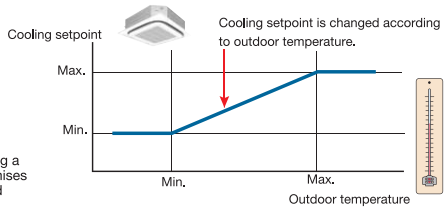

Energy management

Energy saving control assisted by Energy Navigator (Option)

Energy consumption trends of all the equipment (including air conditioning units) can be easily understood by using the Energy Navigator feature. Here users can identify air conditioning units that are suspected of overcooling or kept running in unoccupied rooms.
The Energy Navigator feature will also provide support in formulation and verification of energy-saving measures to help ensure advanced energy management.

Hourly energy consumption is measured and the *intelligent Touch Manager* records data sent from the electrical meter.

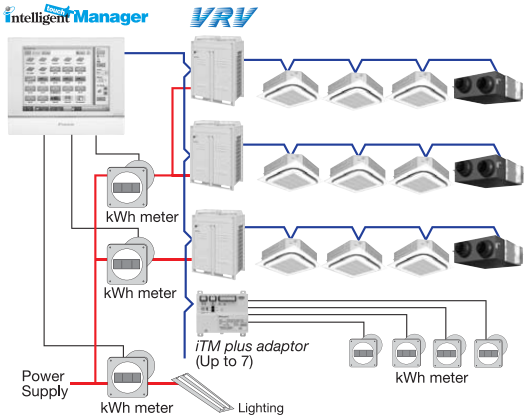

Accumulated data appears in an easy-to-understand graph.

Energy consumption data is presented on a daily and monthly basis. Also, energy targets and projected energy consumption data as well as comparison data with the previous year's actual results are presented in a user-friendly format to help ensure energy-saving control.

Daily energy consumption

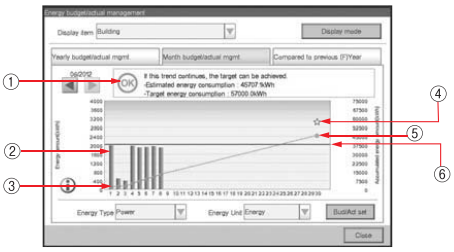

①Warning indication
②Actual daily energy consumption
③Cumulate line
④Current month's target
⑤Prediction line
⑥Daily average to achieve month's target

Monthly energy consumption

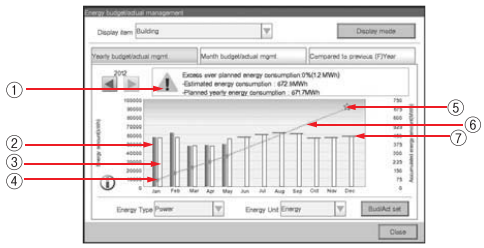

①Warning indication
②Actual monthly energy consumption
③Monthly target energy consumption
④Cumulate line
⑤Current year's target
⑥Prediction line
⑦Monthly target to achieve year's target

Comparison from the previous year

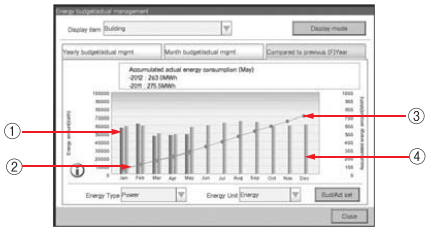

①Current year's energy use
②Current year's cumulate line
③Previous year's cumulate line
④Previous year's energy use

Information concerning energy management of the system can be viewed on the user's own PC via LAN.

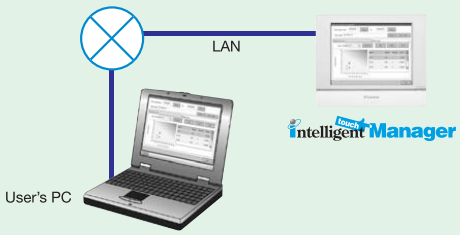

Energy consumption is automatically evaluated for each room.

Based on the accumulated data, the *intelligent Touch Manager* automatically identifies rooms and air conditioning units that substantially deviate from operation rules established by the user for operation time and predetermined temperature settings. A benchmark showing ways to further reduce energy consumption can be displayed to alert users to even greater energy and cost savings.

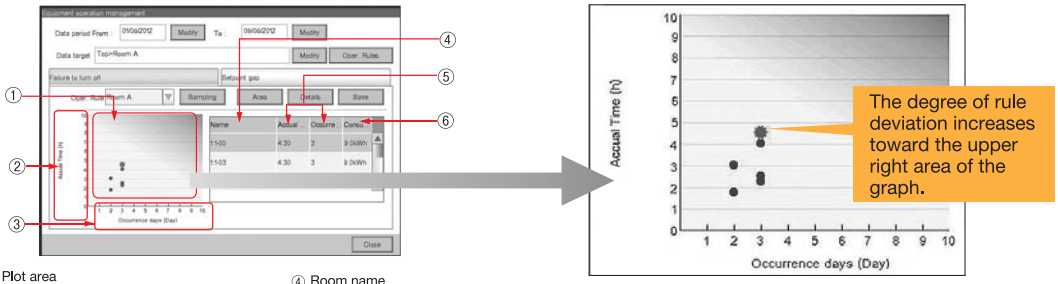

① Plot area
② Number of hours of rule deviation
③ Number of days of rule deviation
④ Room name
⑤ Number of hours and days of rule deviation
⑥ Extra energy consumption

With the PPD function, power consumption can be calculated for each indoor unit. (Option)

The energy consumption is proportionally calculated for each indoor unit. The data can be used for energy management and calculation of air conditioning usage fees for respective tenants.

Operational information of individual indoor units are monitored, allowing for distribution of power consumption at outdoor units.

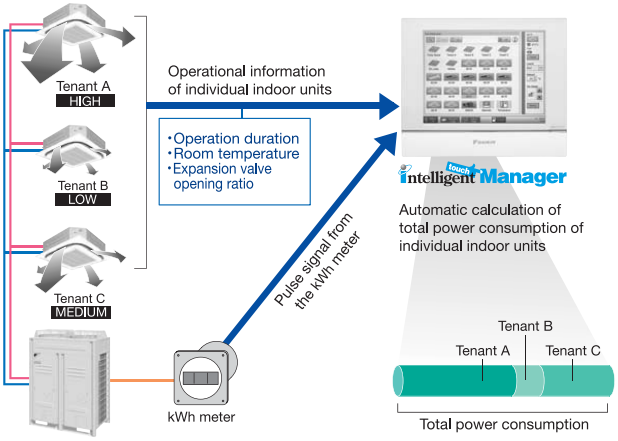

Daikin's PPD* keeps track of power distribution for each indoor unit. It performs air conditioning billing calculations quickly and automatically.

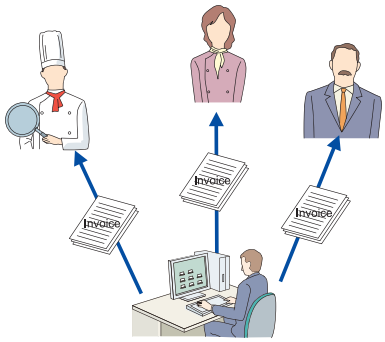

* PPD (Power Proportional Distribution) is Daikin's proprietary calculation method.

It is easy to output PPD data.

PPD data is output in CSV format to a PC or USB memory device and can be freely processed and managed.

26.2 Troubleshooting

Troubleshooting

Various functions for simplifying troubleshooting

Display of maintenance contact information

Contact information of maintenance contractors (who are responsible for servicing air conditioning equipment) can be registered and displayed.

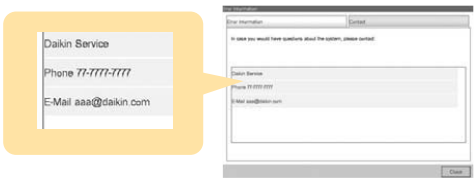

E-mail alerts for reporting malfunctions

E-mail alerts are sent immediately to inform concerned parties of malfunctions involving equipment connected to the *intelligent Touch Manager*. Conveying equipment models and error codes, these e-mail alerts enable recipients to take prompt action and can be set for specific equipment.

Air Conditioning Network Service System (Optional Maintenance Service)

The *intelligent Touch Manager* can be connected to Daikin's own Air Conditioning Network Service System for remote monitoring and verification of operation status for air conditioning units. By its ability to predict malfunctions, this service provides customers with additional peace of mind.

Enhanced convenience with link to the Air Conditioning Network Service System

The *intelligent Touch Manager* connects seamlessly to Daikin's 24-hour Air Conditioning Network Service System.

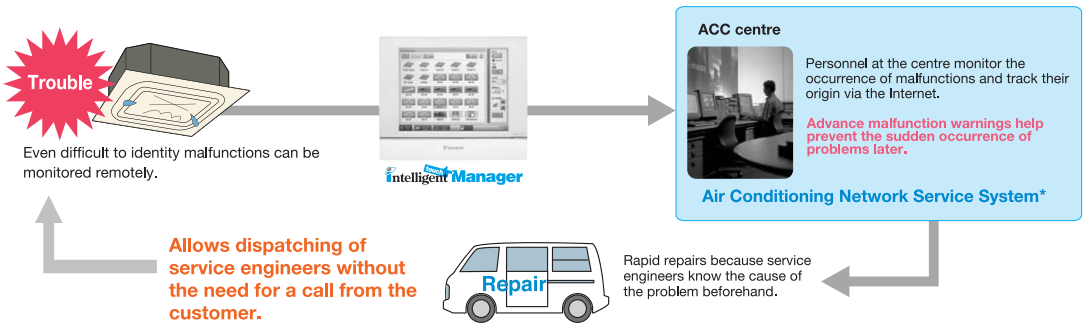

*Because of restrictions in applicable areas and release times, please consult a Daikin representative separately for details.

26.3 Scalability

intelligent Touch Manager

Scalability

A single *intelligent Touch Manager* enables centralised control of up to 512 groups of VRV indoor units.

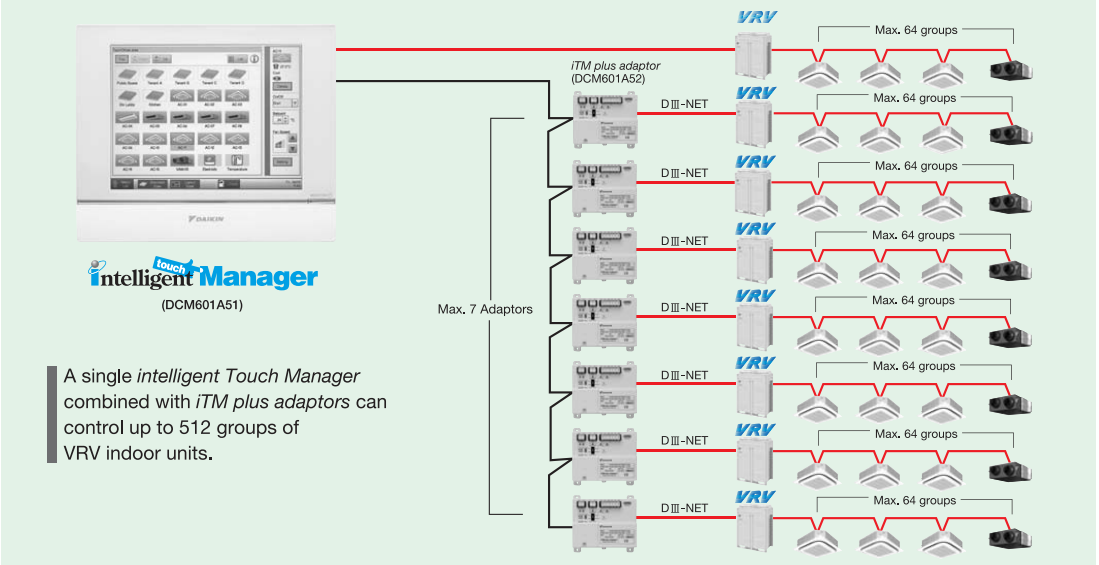

A single *intelligent Touch Manager* combined with *iTM plus adaptors* can control up to 512 groups of VRV indoor units.

Integration of five *intelligent Touch Managers* enables centralised control of up to 2,560 groups of VRV indoor units.

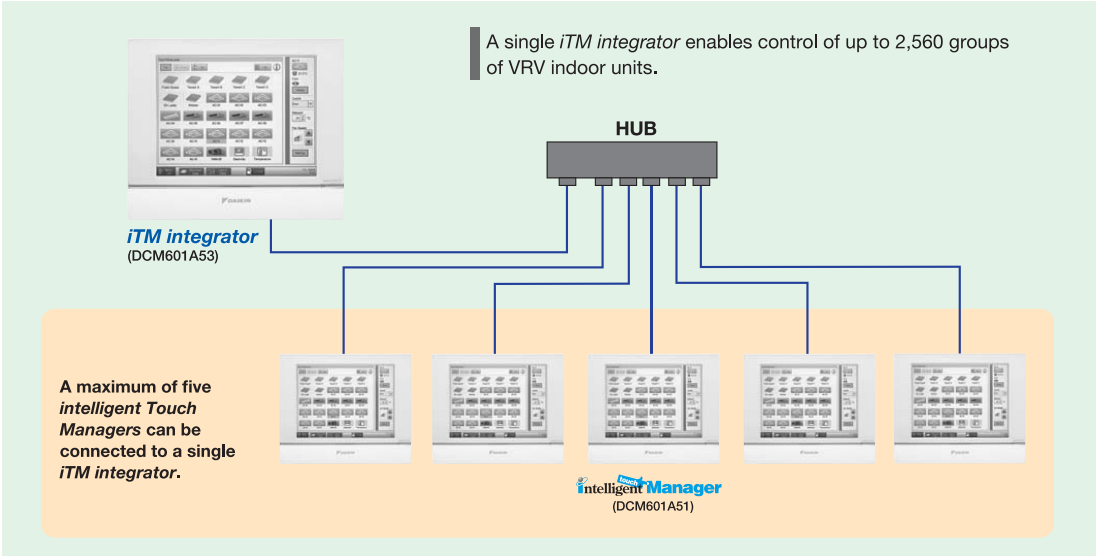

26.4 Specifications

■ *intelligent Touch Manager* function

Category	Function		Remarks
Basic functions	*iTM plus adaptor* (DCM601A52)		Maximum number of adaptors: 7
	Management points		Maximum number of management points: 650 (Number of DⅢ connection management points: 512)
	Areas		Maximum number of areas: 650 Maximum area hierarchies: 10
	Supported languages		English, French, German, Italian, Spanish, Portuguese, Dutch, Chinese, and Japanese
	Monitoring screens	Icon view	Icons show the operation status of equipment.
		List view	Detailed information of each management point is displayed.
		Layout view	Up to 60 screens can be created.
	History		Up to 500,000 events are recorded in history including malfunctions, operations, automatic control, and system information. Operation origin is also recorded.
Automatic control	Schedule		Number of programmes: 100 Up to 20 actions/day can be set.
		Weekly schedule	7 days of the week + 5 special days can be set.
		Yearly calendar	Special days can be specified by date or month/week/day of the week. Special day settings can be reused every year.
		Seasonal schedule	Programmes for respective seasons can be switched by date.
	Interlock		Number of programmes: 500 Interlock is possible for on/off, malfunction, analogue value, and operation mode switching.
	Emergency stop		Number of programmes: 31
	Automatic changeover		Number of changeover groups: 512
	Temperature limit		Number of temperature limit groups: 8 Upper limit range: 32-50°C Lower limit range: 2-16°C
	Sliding temperature		Number of sliding temperature groups: 8 Outdoor temperature range: 18-34°C Setpoint range: 16-32°C
	Heating Mode Optimisation (HMO)		Unneeded heating is prevented.
	Timer extension		Operation stop is selectable from 30, 60, 90, 120, and 180 minutes.
	Setback		Setback setpoint can be set for 2 patterns. Temperature range: 1-7°C , –1-–7°C (setpoint shift amount)
Data control	Power Proportional Distribution		Hourly Power Proportional Distribution results up to 13 months are recorded. The system supports data output in CSV format.
	Energy Navigator		Actual results of daily/monthly energy consumption are shown in graphs. Comparisons can be made with predetermined values/actual results of the previous year. Inefficient operation of VRV indoor units is automatically identified, and energy waste is calculated.
Remote access	Web access		Web browsers can display the same type of screen as the *intelligent Touch Manager*. Up to 4 administrators and 60 general users can be registered. Screens and operation accessible to general users can be restricted.
	E-mail alerts		Up to 10 e-mail addresses can be set. Addresses for sending malfunction alerts can be set by range of management points. The SMTP server authentication method is selectable from no authentication, POP before SMTP, and SMTP-AUTH.
System	Automatic registration		Indoor units connected to DⅢ-NET are automatically detected, and icons for respective models are automatically registered.
	Security		Screen lock functions are available. Access restrictions can be set for each general user.
	Screen savers		Screen savers are selectable from 3 patterns.
	Setting of contact information		Contact information for servicing can be registered.
Air Conditioning Network Service	Air Conditioning Network Service System		A service agreement needs to be concluded.
	Energy Saving Air Conditioning Network Service System		A service agreement needs to be concluded.

26.5 Functions

■ *iTM integrator* function

Category	Function	Remarks
Basic functions	*intelligent Touch Manager* (DCM601A51)	Maximum number of units: 5
	Management points	Maximum number of management points: 3,250 (number of DⅢ connection management points: 2,560)
	Areas	Maximum number of areas: 3,250 Maximum area hierarchies: 10
	Supported languages	English, French, German, Italian, Spanish, Portuguese, Dutch, Chinese, and Japanese

■ Types of management points and target equipment/interface

Management point	Supported equipment	Number of management points
Indoor	DⅢ-compatible indoor units	Maximum: 512 *1
	Interface adaptor for SkyAir (DTA102A52)	
	Interface adaptor for residential indoor unit (KRP928BB2S)	
	Central control adaptor kit (DTA107A55)	
Outdoor	VRV outdoor units	Maximum: 80
Ventilator	Heat Reclaim Ventilator	Maximum: 512 *1
DⅢ Chiller	DⅢ-compatible air-cooled chillers (UWA/Y)/water-cooled chillers (ZUW)	Maximum: 320 *2
Di	Di port of *intelligent Touch Manager*	Maximum: 32 *3
	Di port of *iTM plus adaptor*	
DⅢ Di	DⅢ Di Unit (DEC101A51)	Maximum: 512 *1
External Di	Wago Di	Maximum: 512 *4
DⅢ Dio	DⅢ Dio Unit (DEC102A51)	Maximum: 512 *1
	General-purpose adaptor (DTA103A51)	Maximum: 512 *4
External Dio	Wago Di, Do	
Pi	Pi port of *intelligent Touch Manager*	Maximum: 32 *3
	Pi port of *iTM plus adaptor*	Maximum: 80
Internal Pi	Energy consumption of VRV outdoor units	
External Ai	Wago Ai	Maximum: 512 *4
Internal Ai	Room temperature, setpoint D3 Chiller outlet/inlet water temperatures	Maximum: 512 *4

*1: Total of DⅢ connection equipment (Indoor, Ventilator, DⅢ Chiller, DⅢ Di, DⅢ Dio)
*2: Maximum number of management points for DⅢ Chiller only
*3: Total of Di/Pi management points
*4: Total of External Di, External Do, External Ai, and Internal Ai

■ DAIKIN supplied equipment

Model	Item
DCM601A51	*intelligent Touch Manager*
DCM601A52	*iTM plus adaptor* (Option)
DCM601A53	*iTM integrator* (Option)
DCM002A51	iTM power proportional distribution software (Option)
DCM008A51	iTM energy navigator software (Option)

■ Locally supplied equipment

Item	Specification
USB memory	USB 2.0 Up to 32GB memory can use
PC for Web access	Windows XP Professional SP3 (32bit) Windows VISTA Business SP2 (32bit) Windows 7 Professional SP1 (32bit,64bit) Monitor: 1024x768 or more Web browser: Internet Explorer 8, 9 Firefox 10.0 Flash Player Ver11.1
WAGO I/O system	Modbus communication unit: 750-315/000-002 /K190-6442 DC24V power supply unit: 787-712 DC24V power supply module: 750-613 Connector: 750-960 Terminator module: 750-600 Di module: 750-400, 750-432 Do module: 750-513/000-001 Ai module: 750-454, 750-479 Thermistor module: 750-461/020-000

Main specifications

intelligent Touch Manager

Port	Number	Use
DⅢ	1ch	DⅢ-NET (Up to 64 groups)
LAN	1ch	Web Access (100BASE-TX)
RS485	1ch	External I/O module (Di,Dio,Ai)
Di(Pi)	4ch	Emergency stop input (Di1) Pulse input,contact signal input
plus ADP IF	1ch	*iTM plus adaptor* (Up to 7 adaptors)
internal modem (option)	1ch	Air Conditioning Network Service System

POWER SUPPLY : DCM601A51 AC100-240V(±10%)(50/60Hz)
INPUT : 23W
MASS : 2.4kg
FUSE AMP : 3.15A
Operating temperature limit : -0℃- +40℃
Operating humidity limit : MAX.15 - 85%
Storage temperature range : -15℃- +60℃
Installation direction : Vertical direction only

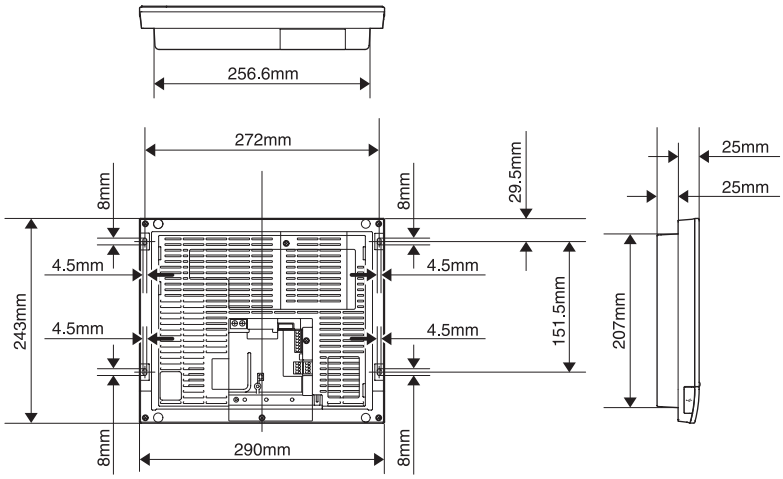

iTM plus adaptor (DCM601A52) Input/Output port

Port	Number	Use
plus ADP IF	1ch	*iTM plus adaptor* (Up to 7 adaptors)
DⅢ	1ch	DⅢ-NET (Up to 64 groups)
Di(Pi)	4ch	Pulse input,contact signal input

POWER SUPPLY : DCM601A52 AC100V-240V(±10%)(50/60Hz)
INPUT : 6W
MASS : 0.5kg
FUSE AMP : 3.15A
Operating temperature limit : -10℃- +50℃
Operating humidity limit : MAX.15 - 85%
Storage temperature range : -15℃- +60℃
Installation direction : Vertical direction only

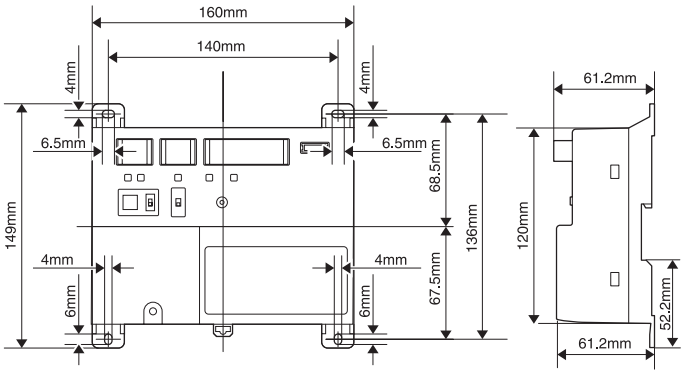

26.6 Wiring Example for intelligent Touch Manager <DCM601A51>

26.6.1 intelligent Touch Manager (DCM601A51) Only

The intelligent Touch Manager can control the air conditioning associated equipment for 64 groups.

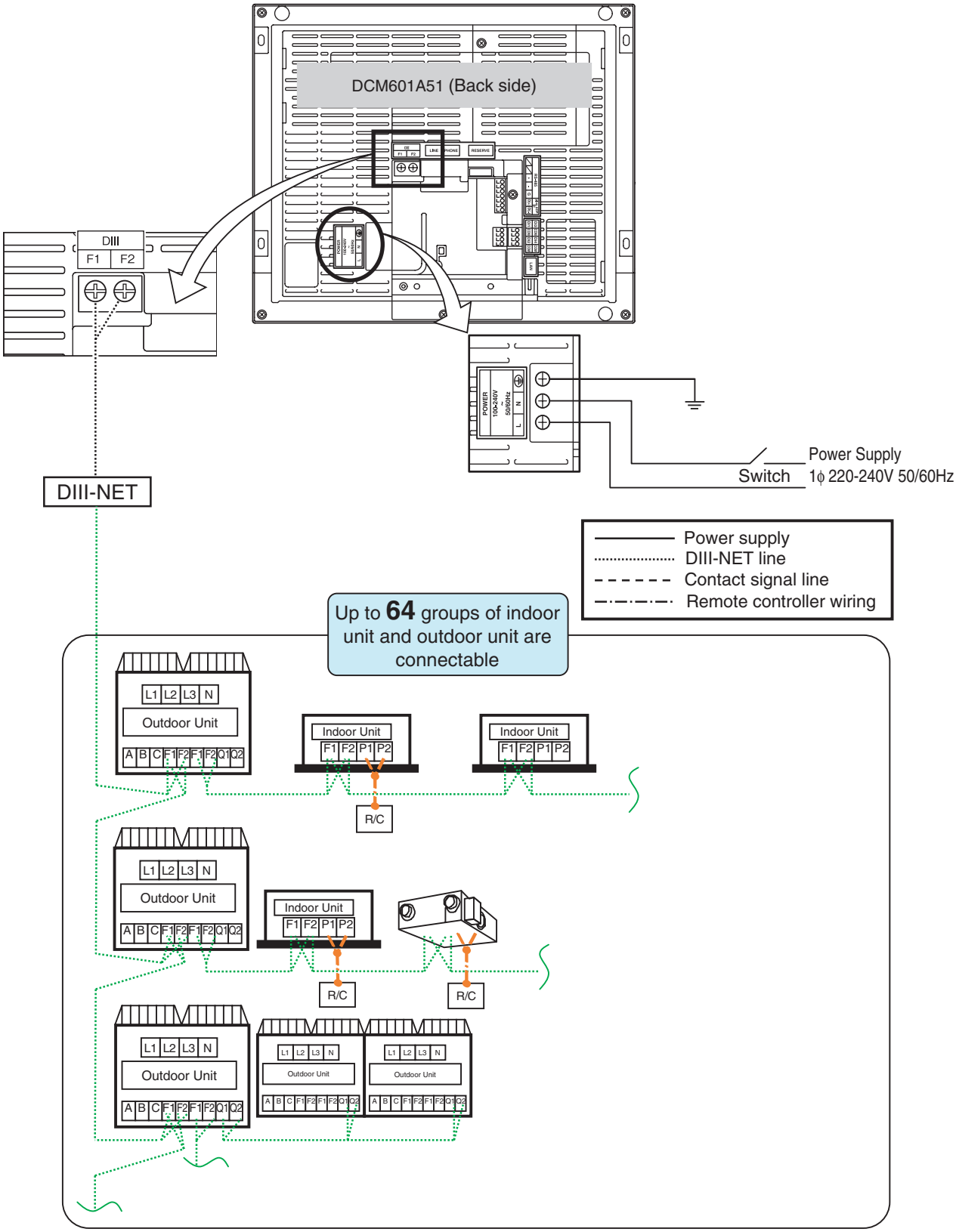

Equipment	Arrangement	Model/Spec	Remark
intelligent Touch Manager	DAIKIN	DCM601A51	Up to 64 groups can be connected

26.6.2 The Case of iTM Plus Adaptor <DCM601A52> Added

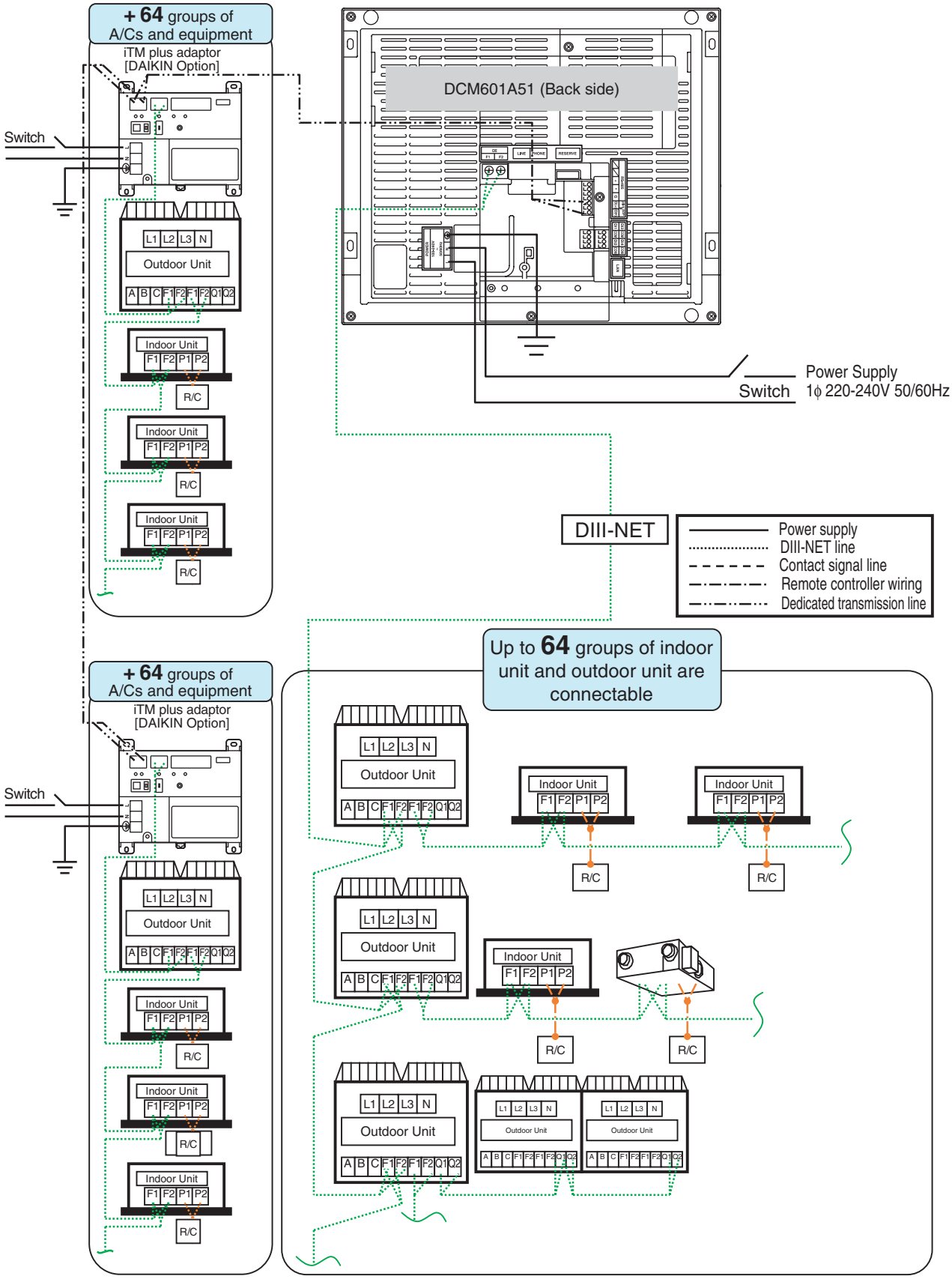

Equipment	Arrangement	Model/Spec	Remark
intelligent Touch Manager	DAIKIN	DCM601A51	Up to 64 groups can be connected
iTM PLUS Adaptor	DAIKIN	DCM601A52	+64 Groups can be connected (Up to 7 units connectable)

26.6.3 PPD (Power Proportional Distribution) Application <DCM002A51>

The power consumption of the outdoor unit can be proportionally calculated for each indoor unit using the intelligent touch Manager and the Power Proportional Distribution software. The calculated results are recorded in the intelligent touch Manager for 13 months. The calculated results can be taken out with the USB memory so that the data can be handled using any spreadsheet software including Excel on the PC.

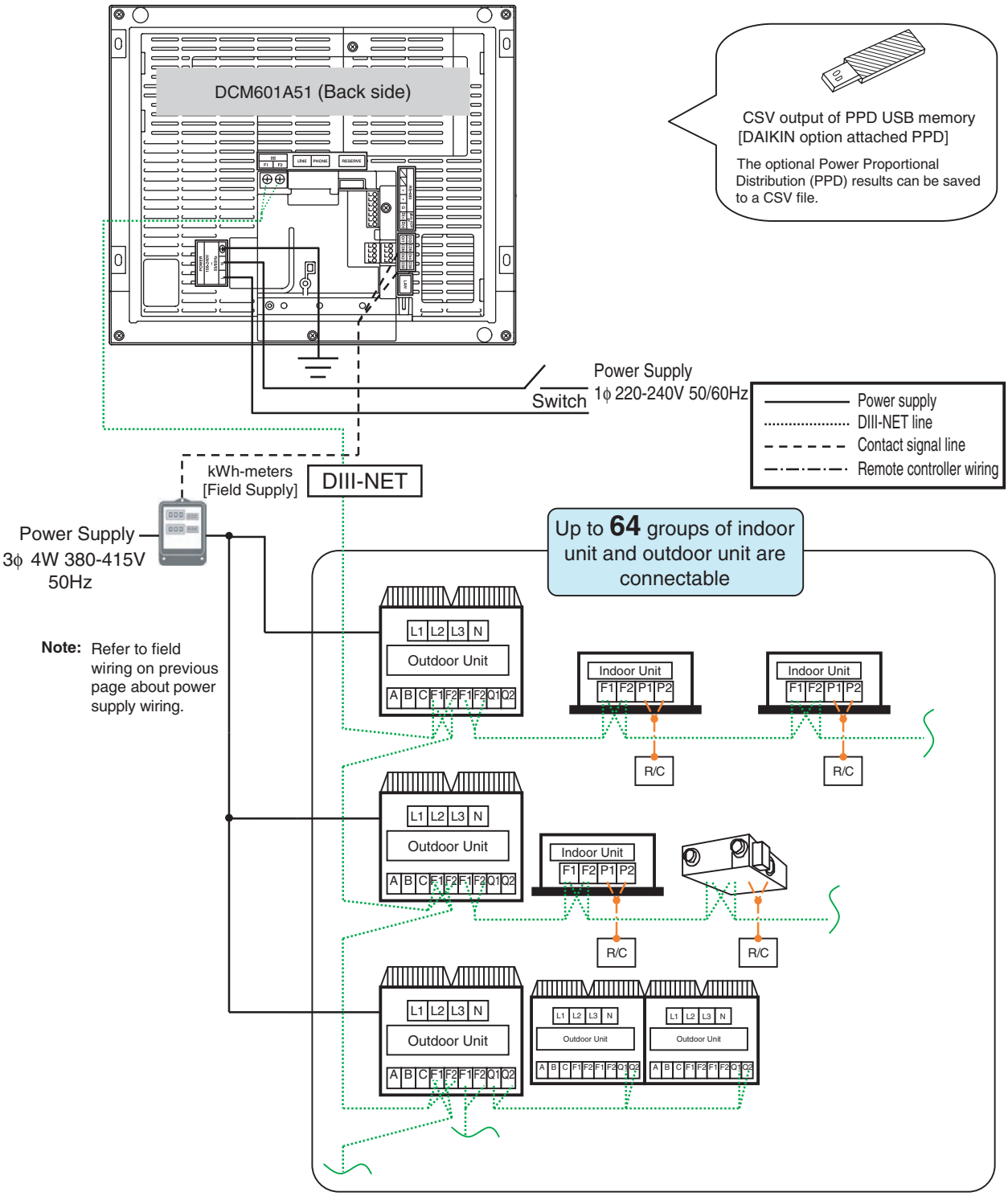

Equipment	Arrangement	Model/Spec	Remark
intelligent Touch Manager	DAIKIN	DCM601A51	Up to 64 groups can be connected
Option for intelligent Touch Manager (PPD)	DAIKIN	DCM002A51	Activation number card included
kW·h meter	Field Supply	Pulse transmitter	•Pulse width must be within 20~400msec. •Output relay must be or electronic type only. •No voltage output.

26.6.4 WEB Usage

The intelligent touch Manager supports web-based remote access so that you can remotely check and control the operation of each air conditioning system through an Intranet or Internet site. (Web site, e-mail, etc.)

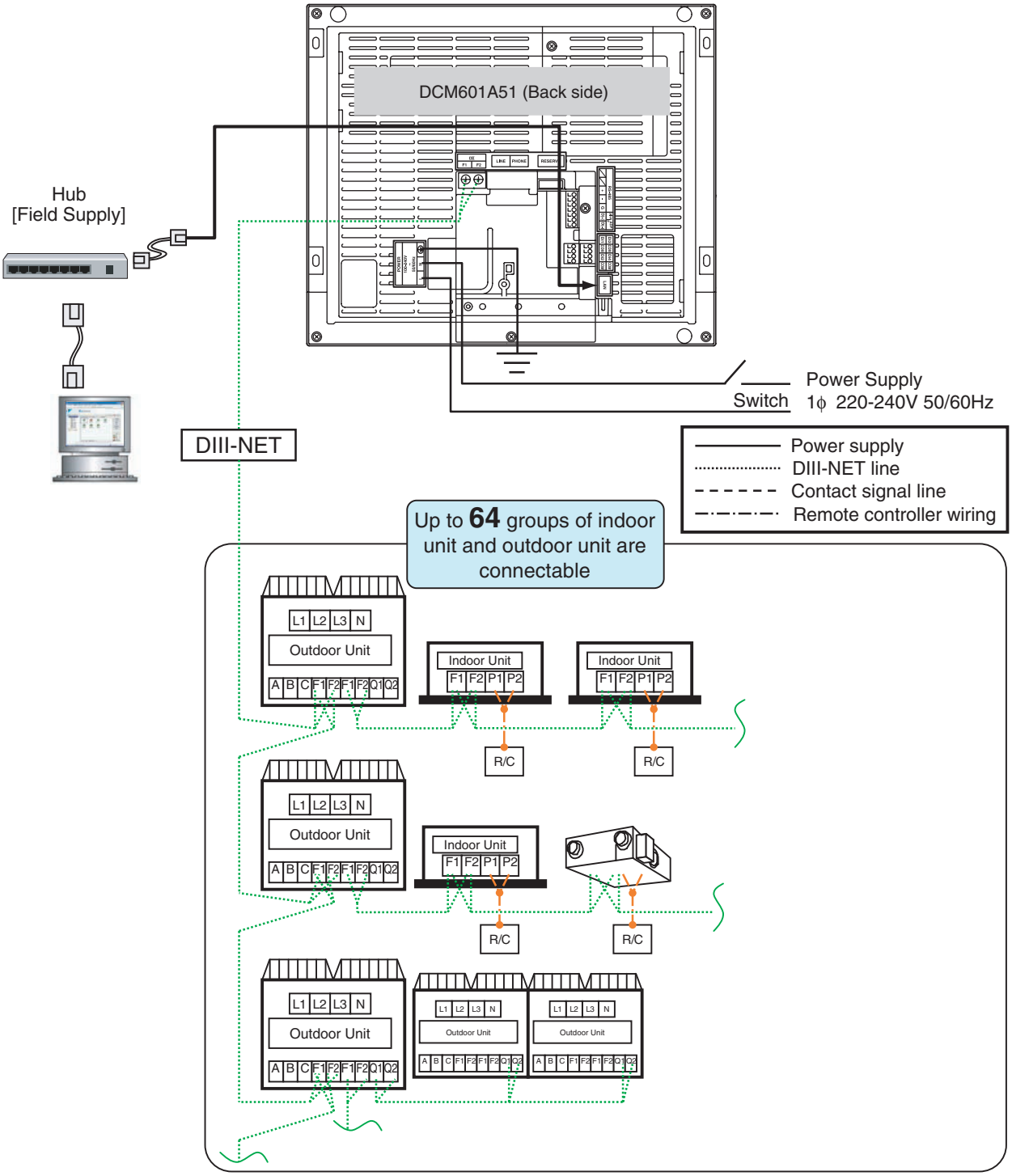

Equipment	Arrangement	Model / Spec	Remark
intelligent Touch Controller	DAIKIN	DCM601A51	Up to 64 groups can be connected
PC	Field Supply	· PC for Web access OS: Windows XP Professional SP3 (32bit) Windows VISTA Business SP2 (32bit) Windows 7 Professional SP1 (32bit, 64bit) CPU: Intel Core 2 Duo 1.2GHz or more Memory: 2GByte or more HDD: 10GByte or more Network Speed: 100BASE-TX or higher Monitor: 1024×768 or more Effective Data Transmission Rate: 115kbps or higher · Flash Player Version 11.1 · Web browser Internet Explorer 8, 9 Firefox 10.0	
e-mail server	Field Supply		When the e-mail error alarm function is used

26.6.5 PPD (Power Proportional Distribution) Application <DCM002A51> and WEB Usage

The power consumption of the outdoor unit can be proportionally calculated for each indoor unit using the intelligent touch Manager and the Power Proportional Distribution software. The calculated results are recorded in the intelligent touch Manager for last 13 months. The recorded, proportionally calculated results can be taken outfrom a remote PC through the LAN.

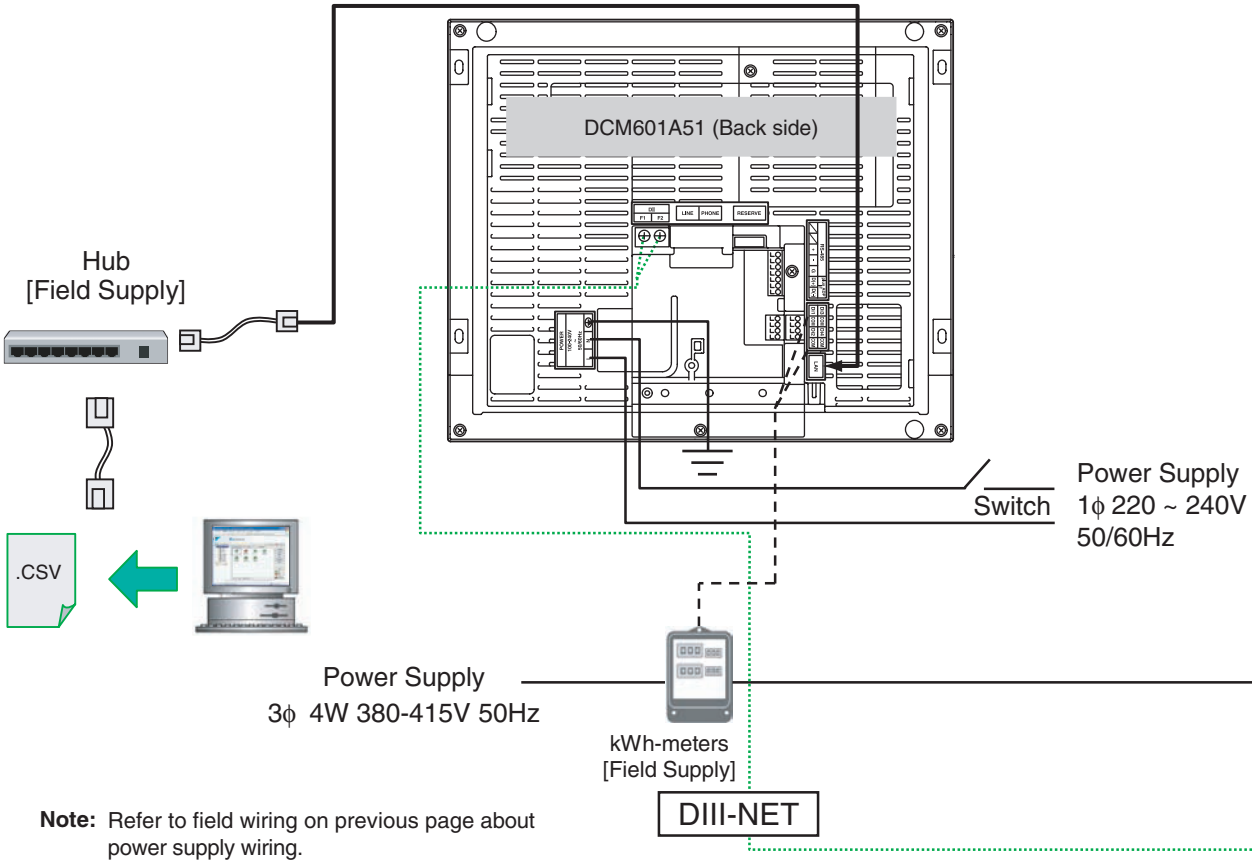

Note: Refer to field wiring on previous page about power supply wiring.

Equipment	Arrangement	Model/Spec	Remark
intelligent Touch Manager	DAIKIN	DCM601A51	Up to 64 groups can be connected
Option for intelligent Touch Manager (PPD)	DAIKIN	DCM002A51	Warranty card
PC	Field Supply	· PC for Web access OS: Windows XP Professional SP3 (32bit) Windows VISTA Business SP2 (32bit) Windows 7 Professional SP1 (32bit, 64bit) CPU: Intel Core 2 Duo 1.2GHz or more Memory: 2GByte or more HDD: 10GByte or more Network Speed: 100BASE-TX or higher Monitor: 1024×768 or more Effective Data Transmission Rate: 115kbps or higher · Flash Player Version 11.1 · Web browser Internet Explorer 8, 9 Firefox 10.0	
HUB	Field Supply	Supporting 100Base/T	
kW·h meter	Field Supply	•Pulse transmitter	•Pulse width must be within 20-400 msec. •Output relay must be electronic type only. •No voltage output

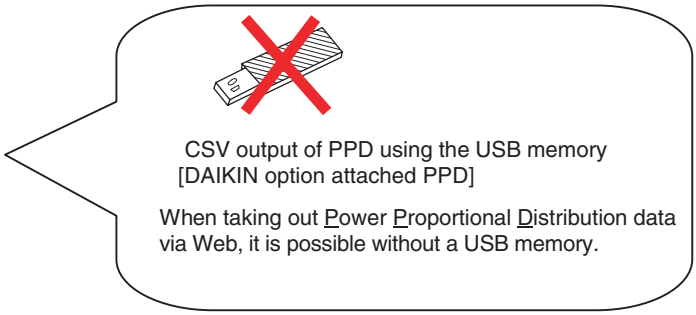
CSV output of PPD using the USB memory
[DAIKIN option attached PPD]
When taking out Power Proportional Distribution data via Web, it is possible without a USB memory.

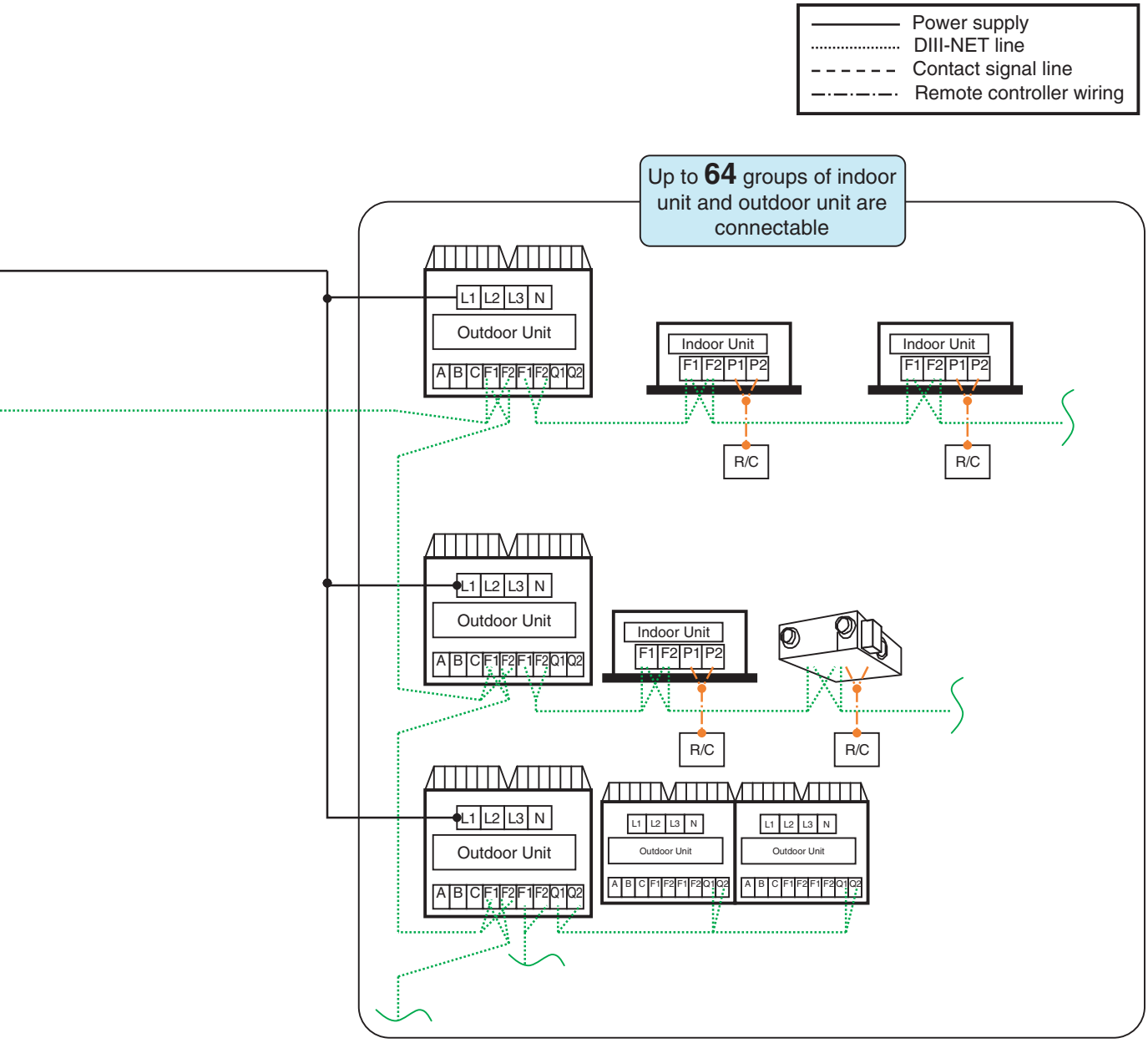
Power supply
DIII-NET line
Contact signal line
Remote controller wiring
Up to 64 groups of indoor unit and outdoor unit are connectable
L1 L2 L3 N
Outdoor Unit
A B C F1 F2 F1 F2 Q1 Q2
Indoor Unit
F1 F2 P1 P2
R/C

26.6.6 Other Air Conditioner + Di, Dio Units

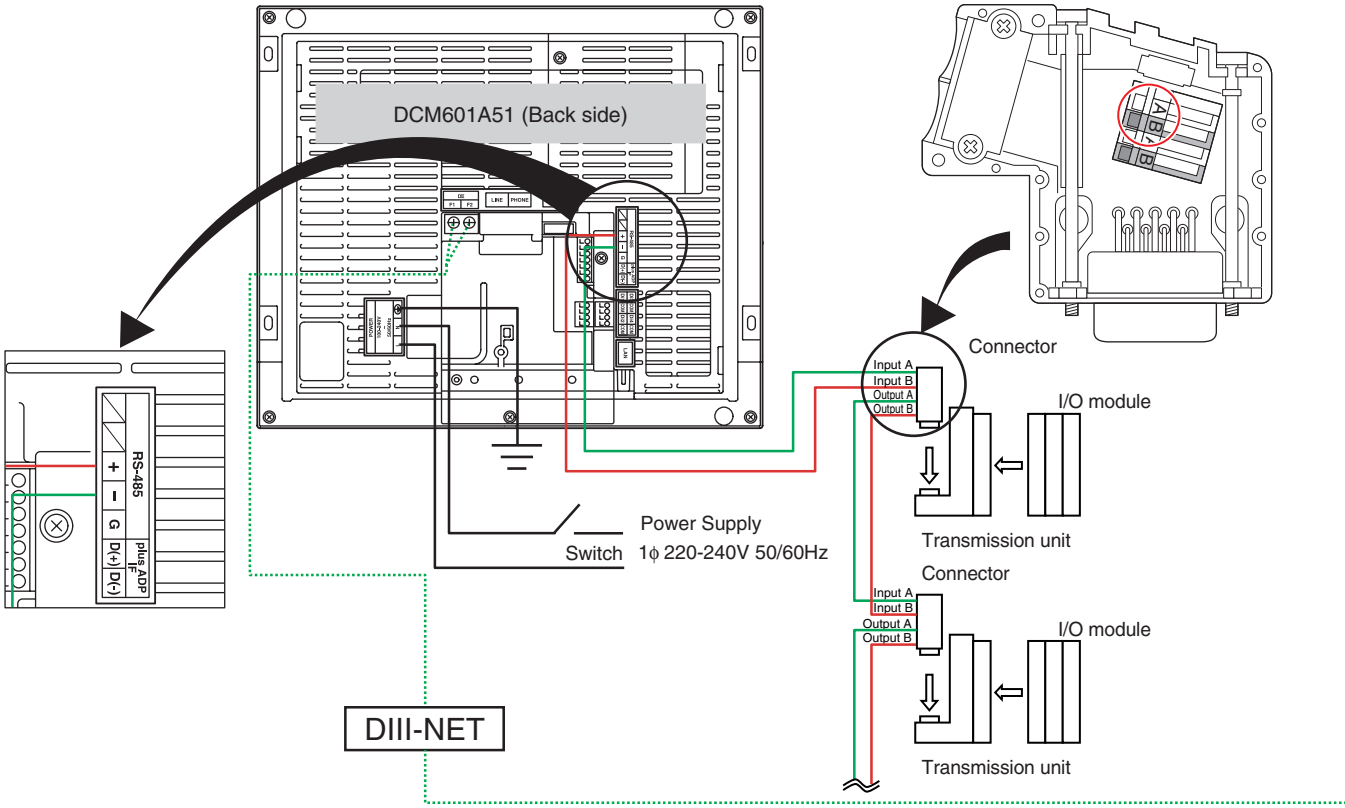

Equipment	Arrangement	Model/Spec	Remark
intelligent Touch Manager	DAIKIN	DCM601A51	Up to 64 groups can be connected
Interface adaptor for SkyAir-series*	DAIKIN	DTA102A52	For SkyAir Series
Interface adaptor for SkyAir	DAIKIN	DTA112BA51	For SkyAir Series
Central control adaptor kit*	DAIKIN	DTA107A55	For UAT(Y)-K(A),FD-K
Dio	DAIKIN	DEC102A51	4 ports: use for connection with the equipment of the other companies
Di	DAIKIN	DEC101A51	8 ports: use for connection with the equipment of the other companies

Note:

*: Adaptors required to connect products other than those of the *VRV* System to the high-speed DIII-NET communication system adopted for the *VRV* System.

* To use any of the above optional controllers, an appropriate adaptor must be installed on the product unit to be controlled.

2

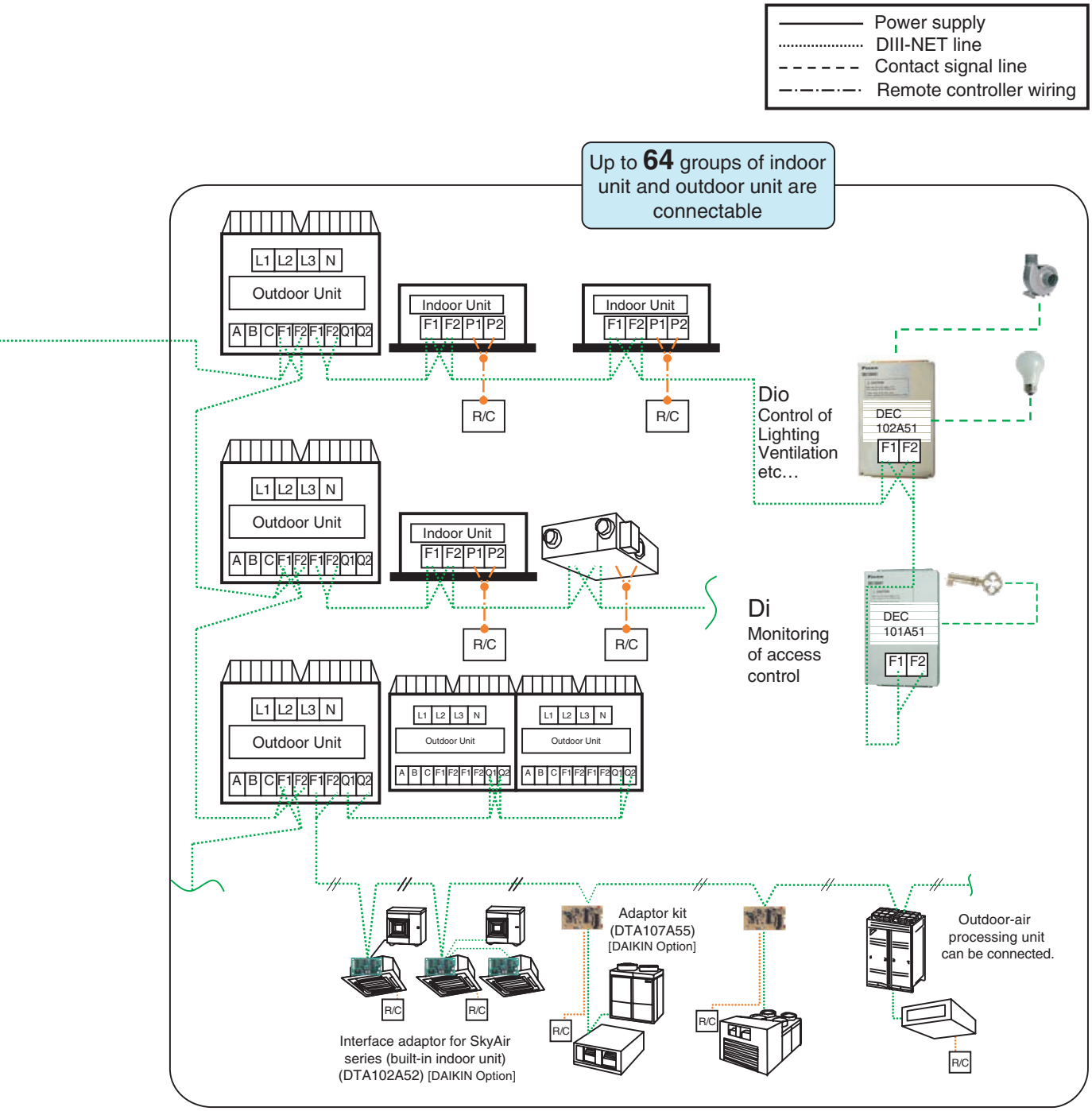
Power supply
DIII-NET line
Contact signal line
Remote controller wiring
Up to 64 groups of indoor unit and outdoor unit are connectable
L1 L2 L3 N
Outdoor Unit
A B C F1 F2 F1 F2 Q1 Q2
Indoor Unit
F1 F2 P1 P2
R/C
Dio
Control of
Lighting
Ventilation
etc…
DEC
102A51
F1 F2
Di
Monitoring
of access
control
DEC
101A51
Adaptor kit
(DTA107A55)
[DAIKIN Option]
Outdoor-air
processing unit
can be connected.
Interface adaptor for SkyAir
series (built-in indoor unit)
(DTA102A52) [DAIKIN Option]

26.7 Installation

26.7.1 Determining installation place - intelligent Touch Manager

Be sure to install the intelligent Touch Manager in a place that meets the conditions described in (1) through (2) below.

(1) Installation place and mounting direction

Below are the description of the installation place and mounting direction. Be sure to confirm.

· Installation place: Indoor, free from dust and water splashes

· Mounting direction: Vertical

(2) Environmental conditions

Make sure that the installation environment meets the following conditions.

· The ambient temperature must be 0 to 40 °C.

· The ambient humidity must be 85% RH or less (without condensation).

· There must be no electromagnetic disturbance.

(3) Required space

To install the intelligent Touch Manager, the following space is required. Make sure that there is a minimum clearance of 30 mm from the top edge, 100 mm from the left side edge, 30 mm from the right side edge, and 60 mm from the bottom edge of the unit.

Required installation space

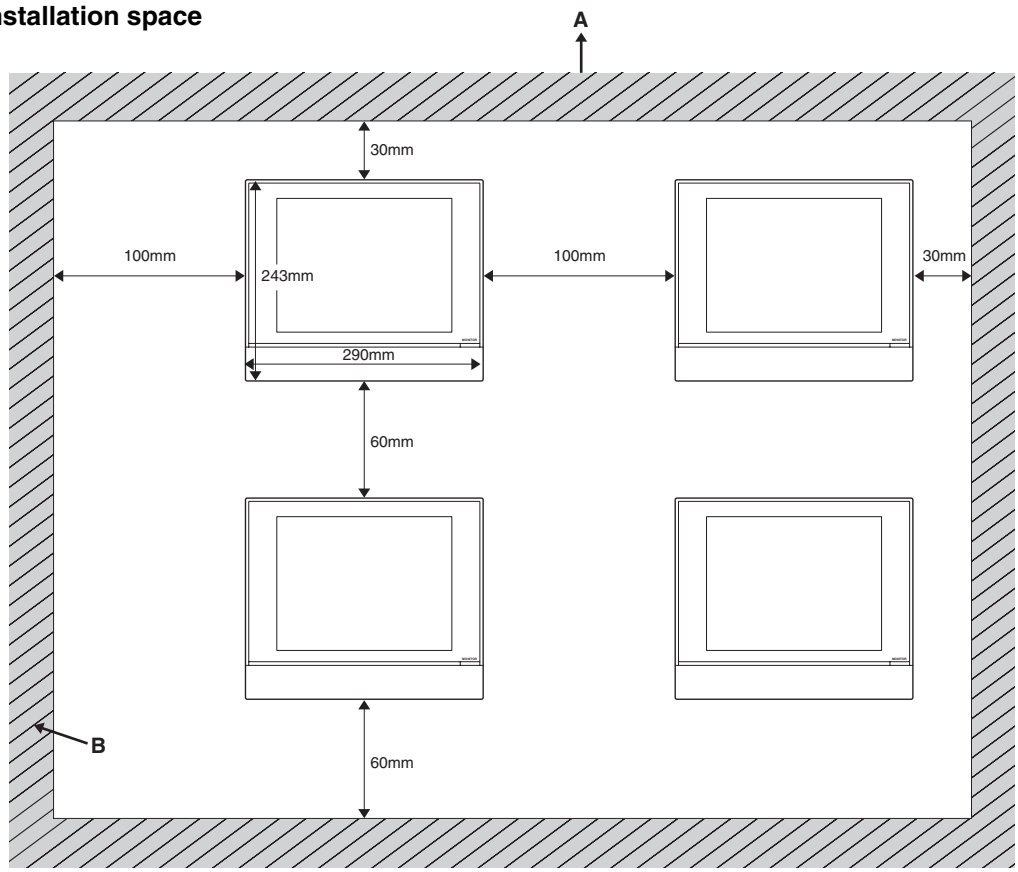

A Top

B Wall

26.7.2 Installation

The intelligent Touch Manager can be installed in the following three ways:

· Wall mounting: The intelligent Touch Manager is hooked onto the wall mounting metal plate secured to the wall.
· Flush wall mounting: The rear portion of the intelligent Touch Manager is embedded in the wall.
· Direct mounting to control enclosure: The intelligent Touch Manager is directly installed to the control enclosure using fixing screws.

<Ways of installation>

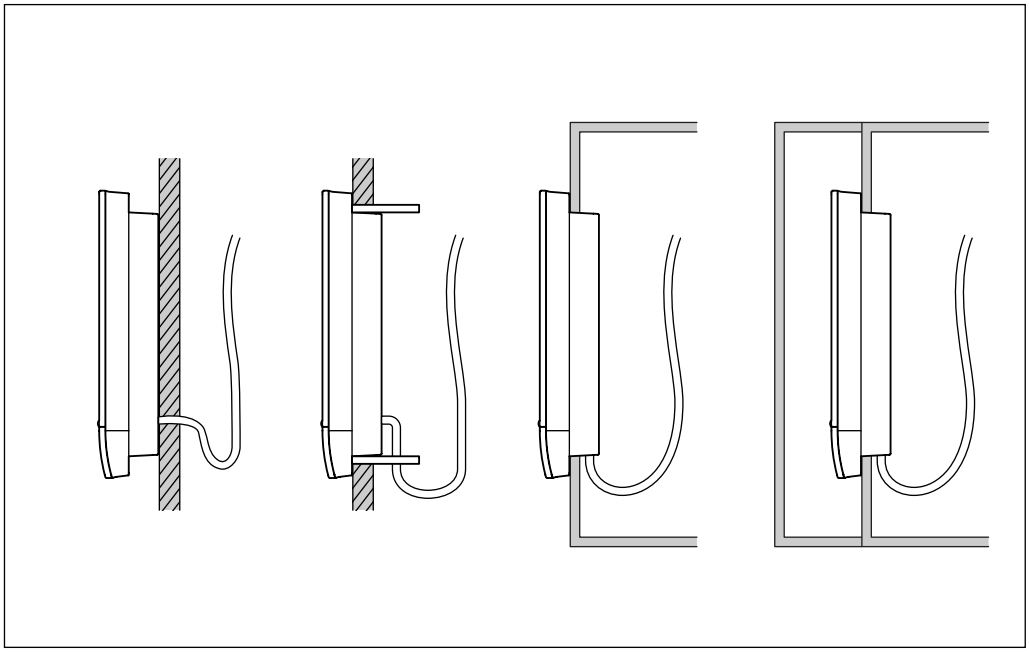

Wall mounting **Flush wall mounting** **Direct mounting to control enclosure**

26.7.3 Determining installation place

Be sure to install the iTM plus adaptor in a place that meets the conditions described in (1) through (3).

(1) Installation place and mounting direction

Note that the iTM plus adaptor must be installed in a place and in a mounting direction as described below:

· Installation place: Indoor, inside control enclosure (which must be lockable or designed to be opened only with a special tool)

· Mounting direction: Vertical only

(2) Required space

To install the iTM plus adaptor, the following space is required. Also note the following:

· Make sure that there is a minimum clearance of 20 mm between each unit and wiring ducts.

· When installing two or more units side by side, they can be arranged without clearance in the horizontal direction.

Required installation space

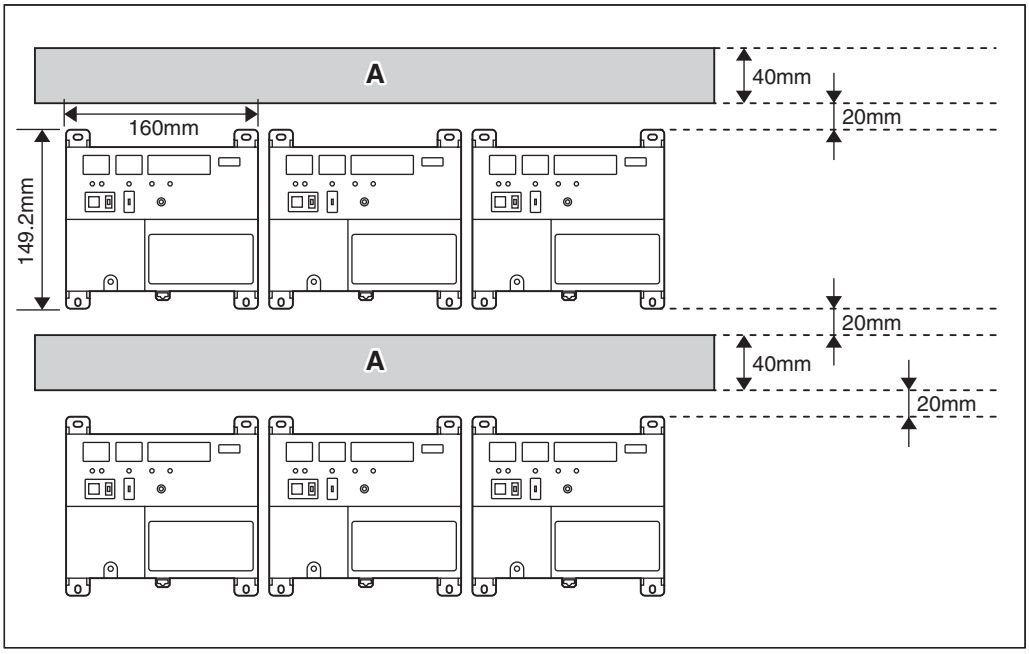

A Wiring duct

(3) Environmental conditions

The installation environment must meet the following conditions:

· Ambient temperature: –10 to 50 °C

· Ambient humidity: 85% RH or less (without condensation)

27. Di Unit

27.1 DEC101A51

Appearance

Di Unit
DEC101A51

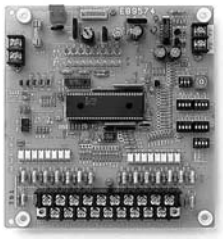

PCB in DEC101A51

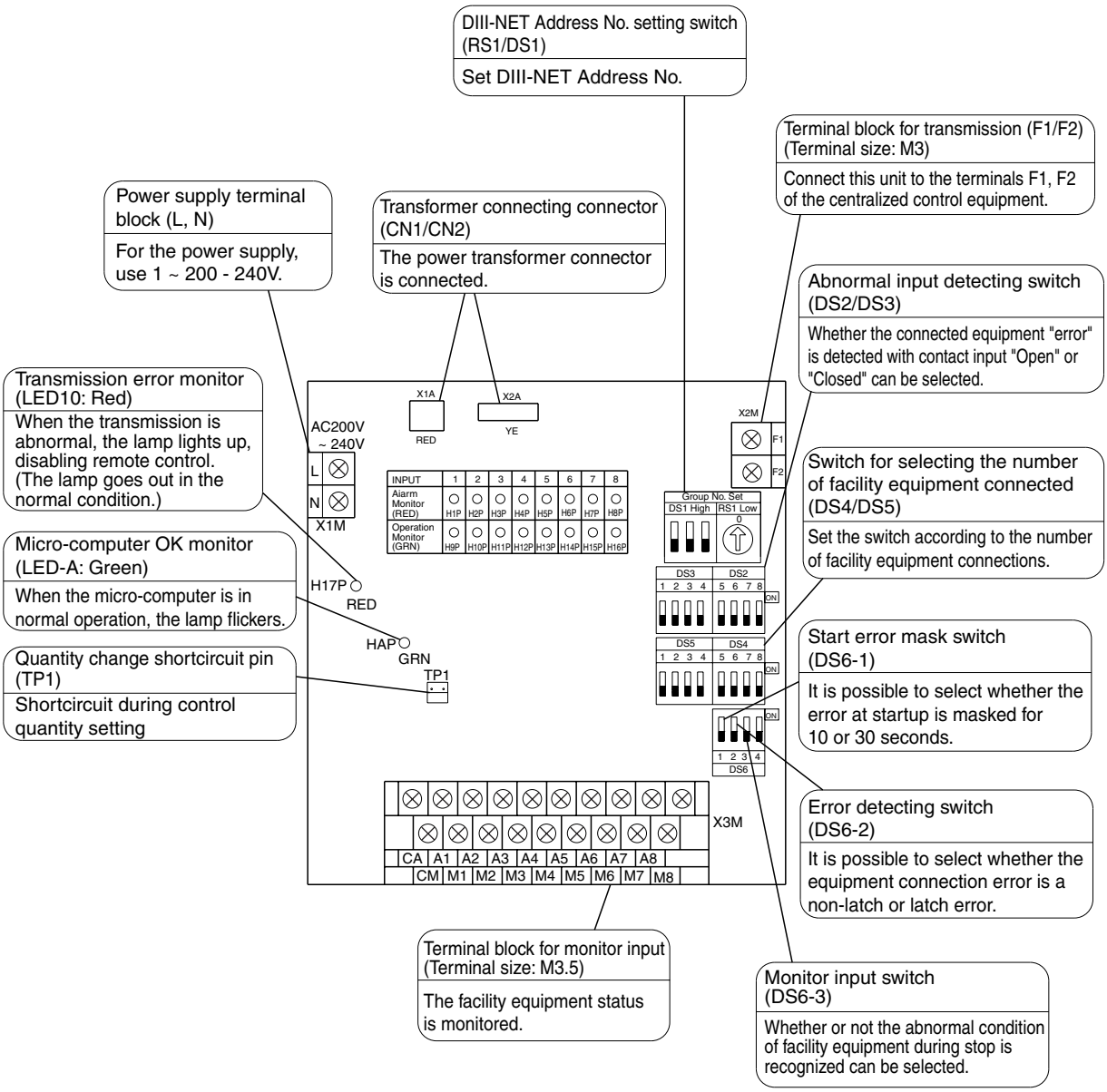

Wiring Lead-In

For wiring connection, remove the front panel (secured with 2 screws) of this equipment.
Upon completion of operation given in this paragraph and **"2. Initial Setting"** below, close the front panel with the screws described above.

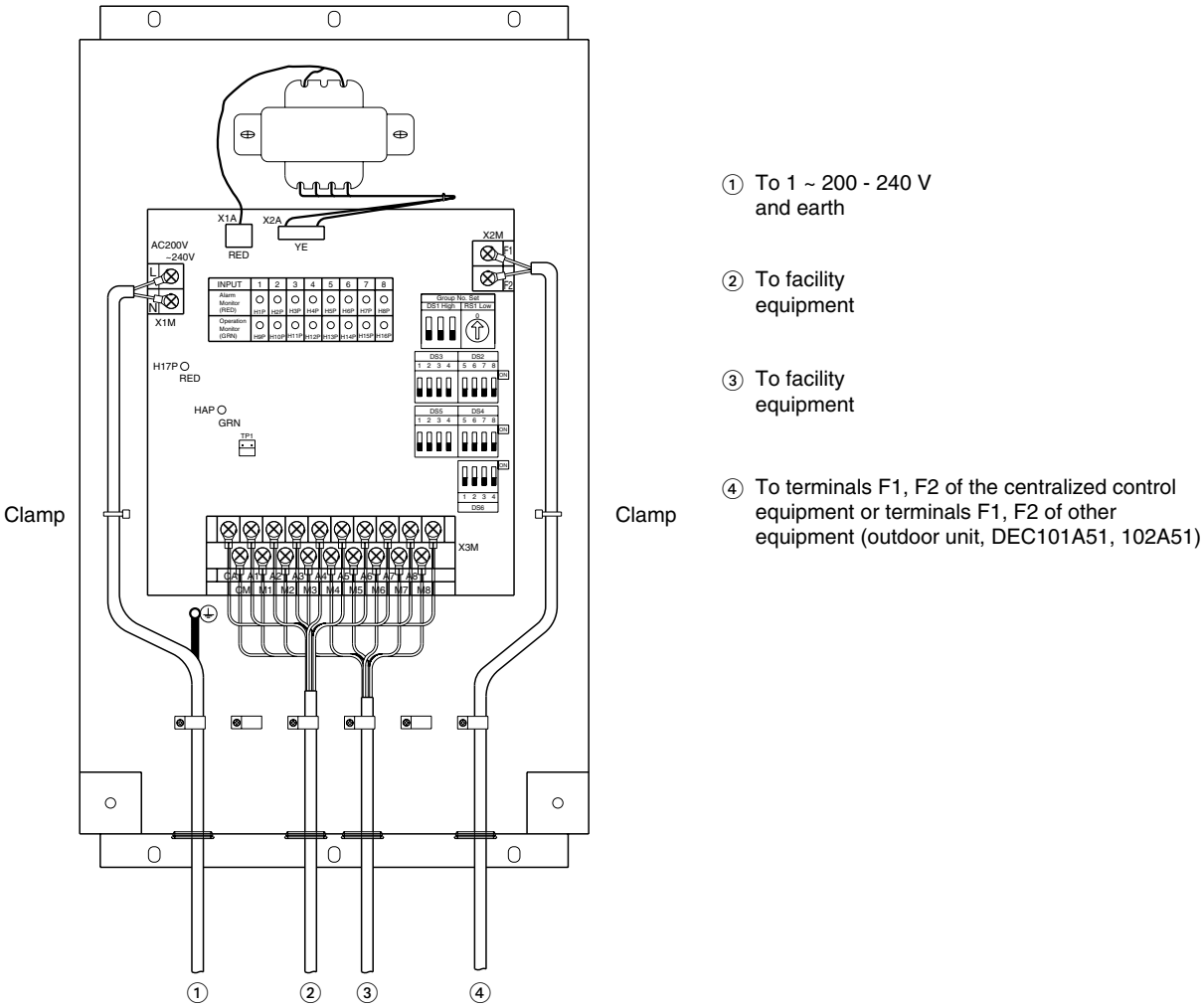

(1) Wire connections and wire clamping should be as shown in the figure above.
(2) No simultaneous clamping is allowed for high-voltage wiring
(power supply wiring (L/N) & earth wiring), low-voltage wiring <Communication wiring (F1/F2), operation input wiring (CM, M1 to 8) and abnormal input wiring (CA, A1 to 8)> since malfunctioning may result. Also, in case where the wirings described above are routed in parallel, be sure to connect the wirings at least 50 mm apart from the other.

Specifications

Item / Model			Di board
Input contacts			16 points. 8 pairs based on a pair of On/Off input and abnormality input
			* Contact information(On/Off, Abnormality) is transmitted to intelligent Touch Controller / intelligent Manager III through DIII-Net communication.
Installation method			Indoor installation
Power supply			To be supplied from outside
Rating			AC200-240V, 50/60Hz
Applied Standard			Safety standard: IEC730, EMC standard: CISPR22-A (EMI), CISPR24 (EMS)
Environment for use	Outdoor air temperature	°C	–15 to 60
	Ambient humidity		95%RH or less (no condensation)
Environment for storage	Outdoor air temperature	°C	–20 to 60
	Ambient humidity		95%RH or less (no condensation)

28. Dio Unit

28.1 DEC102A51

Appearance

Dio Unit
DEC102A51

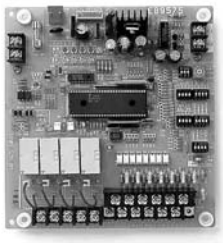

PCB in DEC102A51

The figure below shows the PC board built in this equipment.

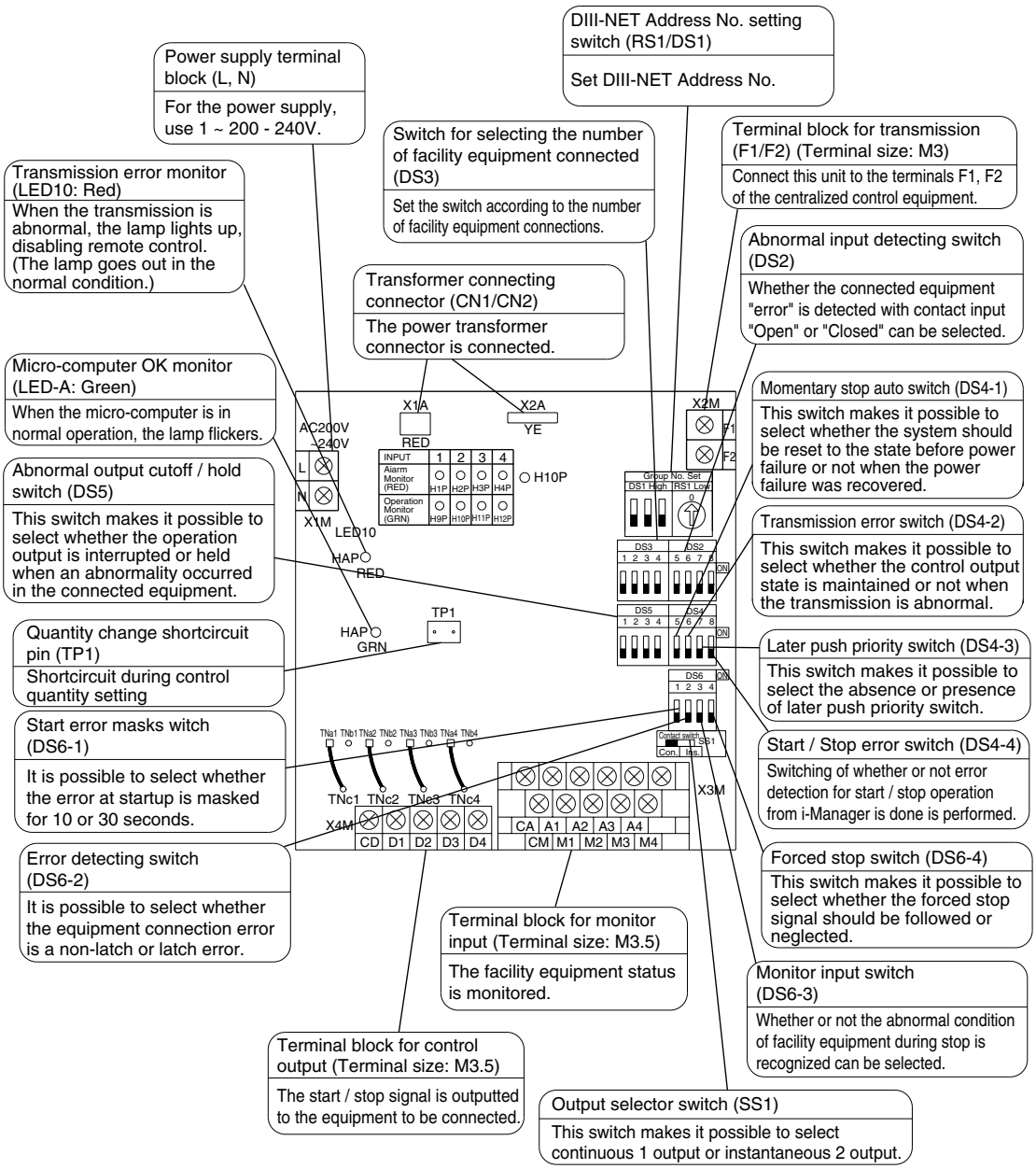

Wiring Lead-In

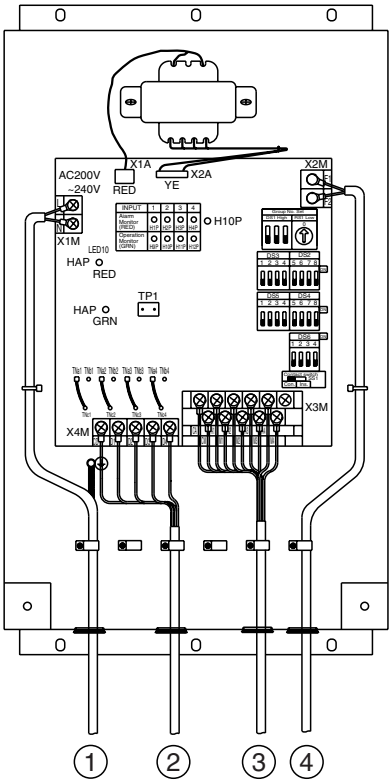

No simultaneous clamping is allowed for high-voltage wiring <power supply wiring (L/N), earth wiring, relay output wiring (CD, D1 to 4)>, low-voltage wiring <communication wiring (F1/F2), operation input wiring (CM, M1 to 4) and abnormal input wiring (CA, A1 to 4)> since malfunctioning may result.
Also, in case where the wirings described above are routed in parallel, be sure to connect the wirings at least 50mm apart from the other.

① To 1~200-240V and earth
② To facility equipment
③ To facility equipment
④ To terminals F1, F2 of the centralized control equipment or terminals F1, F2 of other equipment
(outdoor unit, DEC101A51, 102A51)

Specifications

Item / Model			Dio board
Input contacts			8 points. 4 pairs based on a pair of On/Off input and abnormality input
			* Contact information(On/Off, Abnormality) is transmitted to intelligent Manager III through DIII-Net communication.
Output contacts			4 points. In case of normally output, 4 units are controllable. In case of instantaneous output, 2 units are controllable.
			* From intelligent Touch Controller / intelligent Manager III, On/Off and control of the equipment with the external contacts are possible through DIII-NET communication.
Installation method			Indoor installation
Power supply			To be supplied from outside
Rating			AC200-240V, 50/60Hz
Applied Standard			Safety standard: IEC730, EMC standard: CISPR22-A (EMI), CISPR24 (EMS)
Environment for use	Outdoor air temperature	°C	–15 to 60
	Ambient humidity		95%RH or less (no condensation)
Environment for storage	Outdoor air temperature	°C	–20 to 60
	Ambient humidity		95%RH or less (no condensation)

Output specs: Voltage free “a” contact

Voltage specs	Maximum current	Minimum current
AC200–240V	1.5 A (resistance load)	10mA
DC5–24V	2.0 A (resistance load)	10mA

Input specs: Voltage free “a” contact
Micro current load contact input (DC12V, 1 mA or less)
Wiring length: 150 m

29. Interface for use in BACnet®

29.1 DMS502B51

1 Components

The following parts are attached to this unit.
Make sure to check them before installation.

Interface for use in BACnet	1 set
INSTALLATION MANUAL	1 copy

2 Names and functions of each part

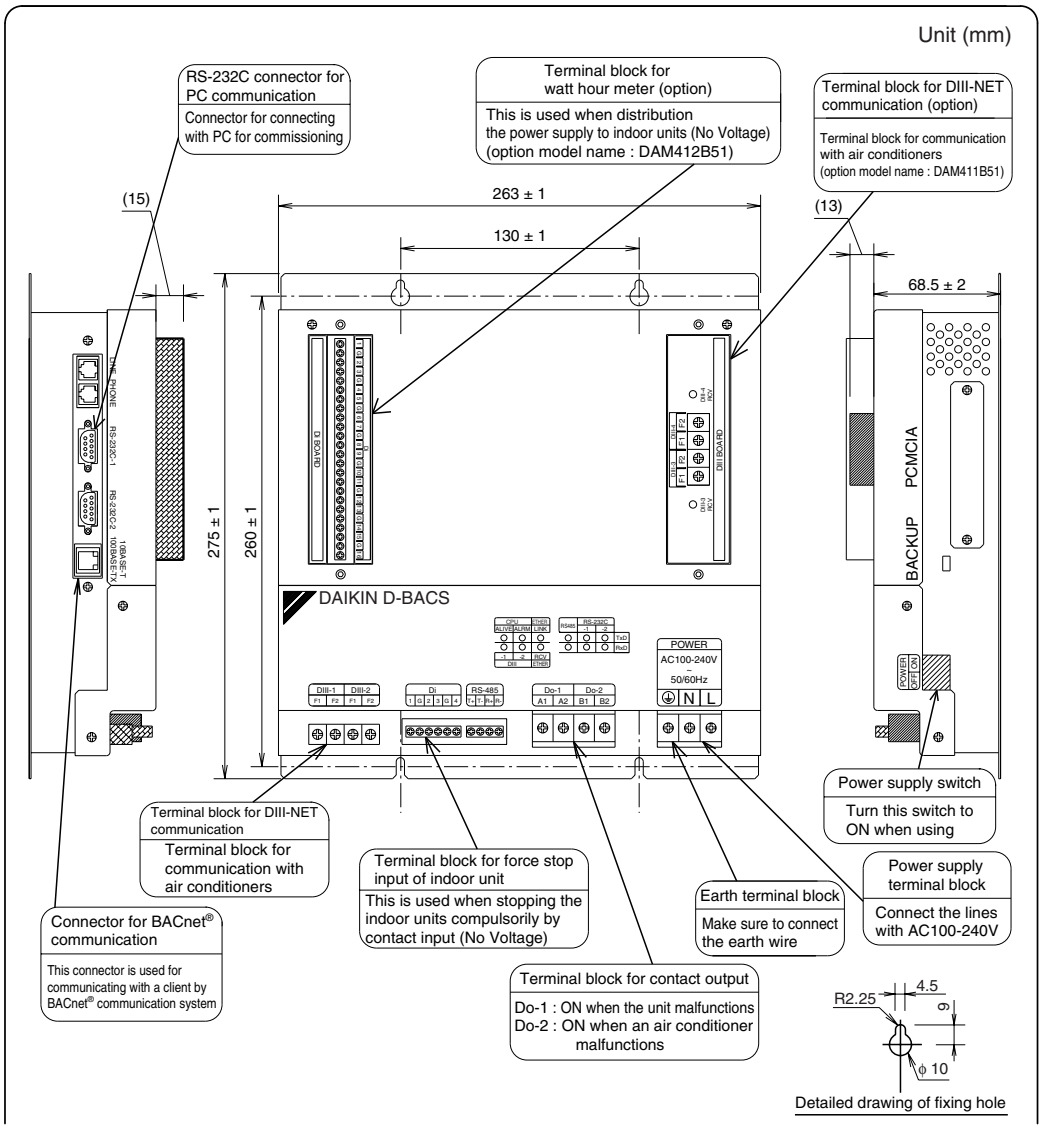

C: 1P191169D

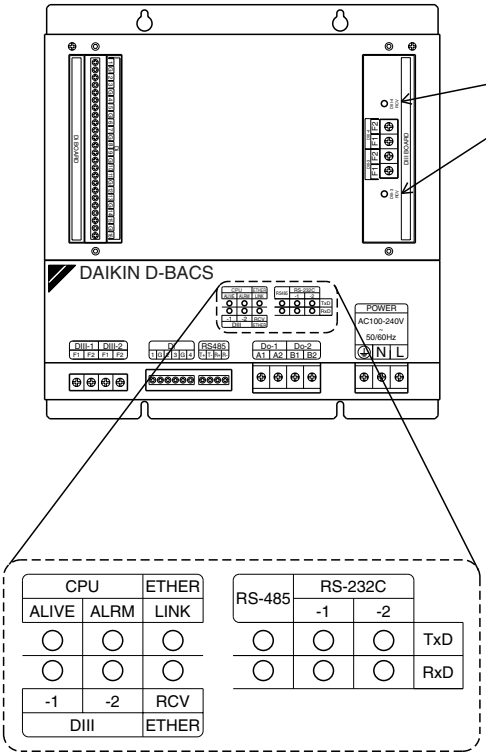

LED display

DIII-4 RCV	It flashes when it receives/transmits data from/to the equipment connected with DIII-4 such as air conditioners
DIII-3 RCV	It flashes when it receives/transmits data from/to the equipment connected with DIII-3 such as air conditioners

LED display

CPU ALIVE	It flashes when the unit is normal operation.
CPU ALRM	It flashes when the unit is abnormal operation.
DIII-1	It flashes when it receives/transmits data from/to the equipment connected with DIII-1 such as air conditioners
DIII-2	It flashes when it receives/transmits data from/to the equipment connected with DIII-2 such as air conditioners
Ether RCV	It flashes when it receives/transmits data from/to BACnet client
Ether Link	It lights when the 10BASE-T cable or 100BASE-TX cable
RS-485 (T×D)	This LED display cannot be used with this unit
RS-485 (R×D)	This LED display cannot be used with this unit
RS-232C-1 (T×D)	It flashes when it transmits data to PC
RS-232C-1 (R×D)	It flashes when it receives data to PC
RS-232C-2 (T×D)	This LED display cannot be used with this unit.
RS-232C-2(R×D)	This LED display cannot be used with this unit.

❸ Installation

Don't fail to turn OFF the indoor unit power switch before installing Interface for use in BACnet.
Failure to observe this instruction could result in electric shock.

- **Location**

  Make sure to install the unit on the inside of the inaccessible and lockable (or needed to use exclusive tools to open) electrical component box installed indoors where the effect of electromagnetic wave or dust can be avoided.
  The minimum depth required for installation is 100mm.

- **Required installation space**

  Keep the minimum amount of space indicated in the below drawing from walls, and between units when installed in series.

Unit (mm)

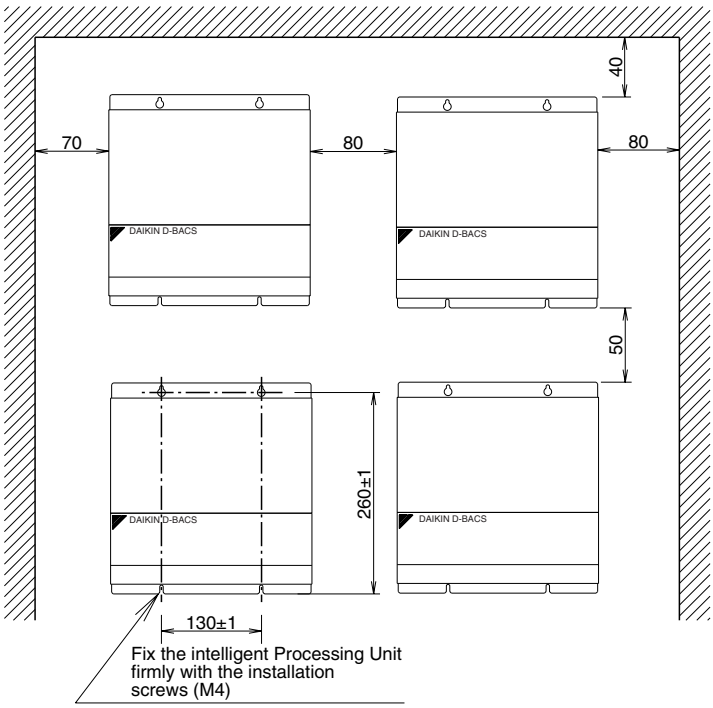

C: 1P191169D

TO BACK

• **How to install**

For installation direction follow the drawing shown below.

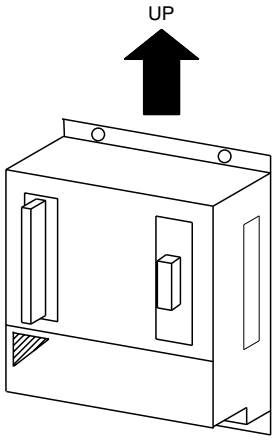

< < CAUTION > >

Make sure to install the unit vertically. Do not install the unit horizontally, because it may cause malfunction.

Setting " BACK-UP BATTERY VALIDATE " switch
(shifted to OFF when being shipped from the shop. -- Back-up battery set to INVALIDATE)
For the switch to back up the clock, etc. in case of any power failure, actuate it from OFF side (knob is located above) to ON side (knob is located below) as shown in the figure below.

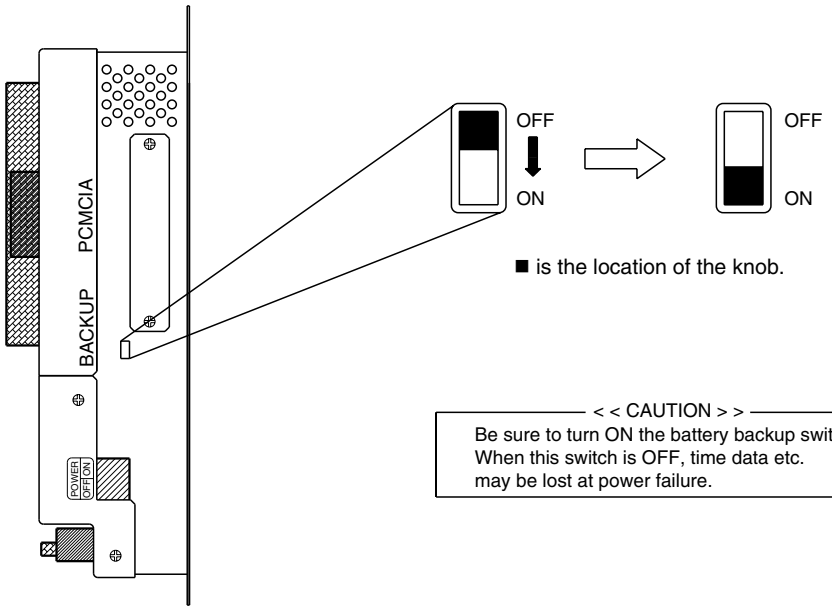

■ is the location of the knob.

< < CAUTION > >

Be sure to turn ON the battery backup switch.
When this switch is OFF, time data etc.
may be lost at power failure.

C: 1P191169D

④「DⅢ-NET master」setting

●Make sure to connect the unit with「DⅢ-NET master」
(Do not remove the master central setting connector.)
Remove the master central setting connectors of the centralized management controllers or ON/OFF controllers When using togeter with other centralized controllers such as centralizedmanagement controllers or ON/OFF controllers.

⑤Malfunction of unit

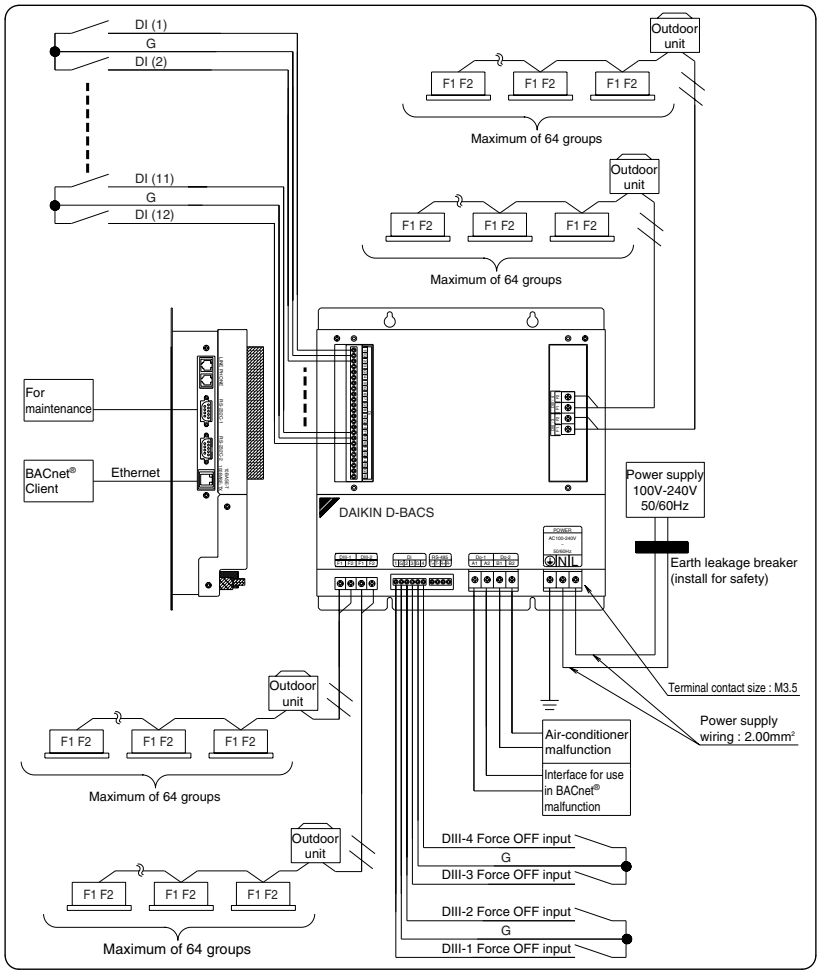

⑥Electric Wiring Connection

Don't fail to turn OFF the indoor unit power switch before installing Interface for use in BACnet.
Failure to observe this instruction could result in electric shock.

■ **Everything relating with field wiring must be supplied in the field.**

1. DIII-NET Wiring

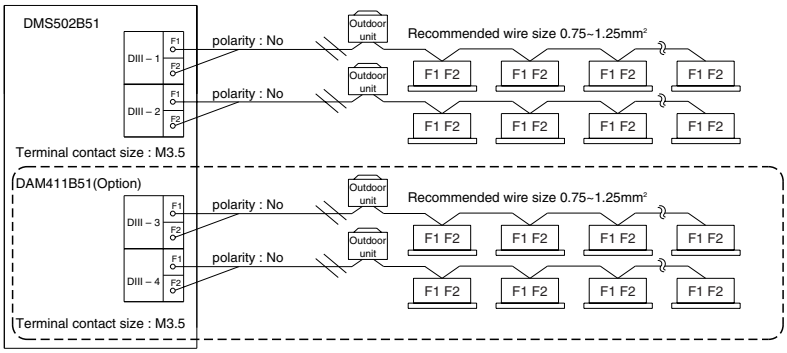

● **Cautions for wiring**
1. Do not use multicore cables with three or more cores
2. Use wires of sizes between 0.75mm² and 1.25mm²
3. Do not bind the wire for DIII-NET
4. Wirings for DIII-NET must be isolated from the power lines
5. Wire length : Max 1000m

C: 1P191170D

2. No Voltage Contact Input Wiring

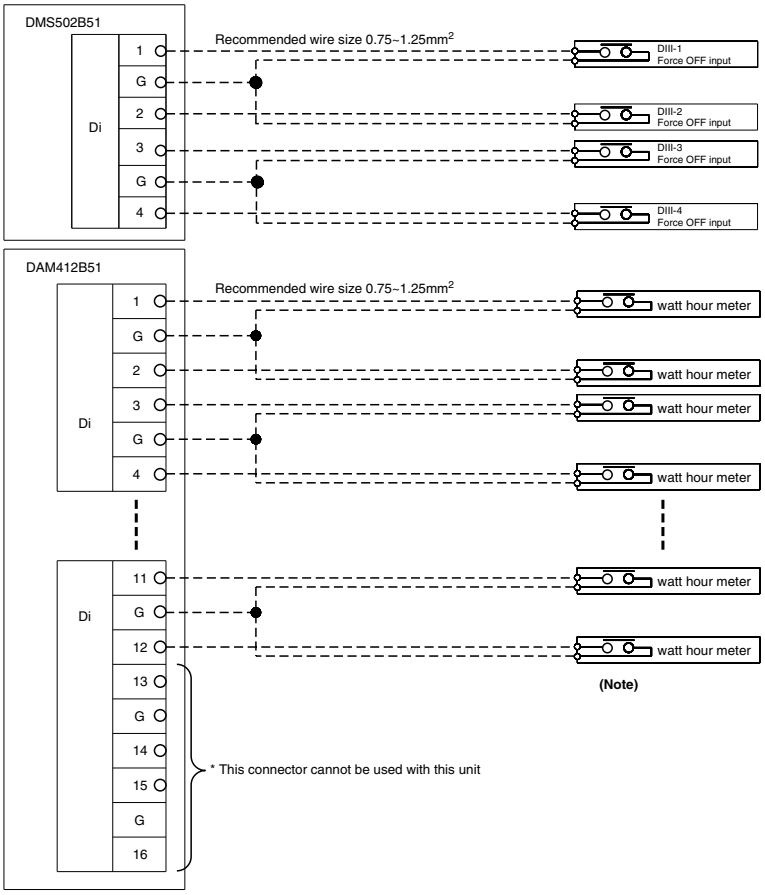

Note:
Use a meter that outputs one pulse of a width from 100~400ms, per one kWh.

The pulse of watt hour meter

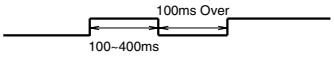

- **Cautions for wiring**

1. The input are all the no voltage contact
2. Use a contact which can guarantee minimum application load DC16V and 10mA
3. Do not use multicore cables with three or more cores
4. Use wires of sizes between 0.75mm^2 and 1.25mm^2
5. Do not bind the wire for control
6. Wirings for control must be isolated from the power lines
7. Terminals G are inter-connected. Connecting to either one is allowed, but the number of cables connectable to one terminal is limited to 2 pieces
8. Wire length : Max 150m

3. No Voltage Contact Output Wiring

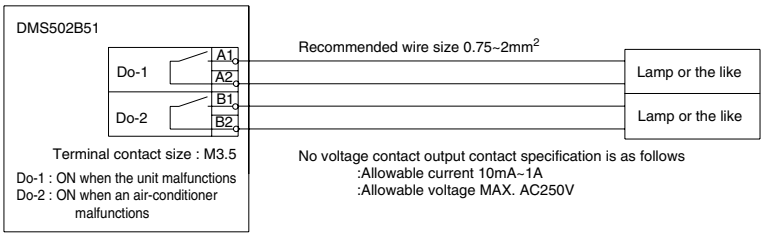

- **Cautions for wiring**

1. Do not use multicore cables with three or more cores.
2. Use wires of sizes between 0.75mm^2 and 2mm^2.
3. Do not bind the wire for control.
4. Wirings for control must be isolated from the power lines.
5. Wire length : Max 150m

C: 1P191170D

4. Ethernet Communication Wiring

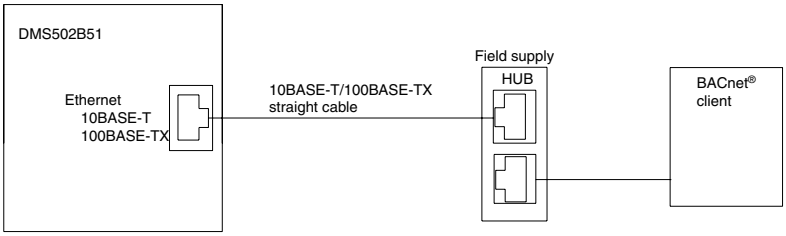

● **Cautions for wiring**

Do not clamp these cables together with high voltage cables.
Failure to observe this instruction would cause control error.

❼ Setting group No. for centralized control

Set the group number of each group of the indoor unit from the remote controller. (In case of no remote controller, also connect the remote controller and set the group No. Then, remove the remote controller.)

(1) Turn ON the power of the indoor unit and interface for use in BACnet.
(Unless the power is ON, no setting can be made.)
Check that the installation and electrical wiring are correct before turning the power supply ON.
(When the power supply is turned ON, all LCD appear once and the unit may not accept the operation for about one minute with the display of "88".)

(2) While in the normal mode, hold down the "" button for a minimum of 4 seconds.
The remote controller will enter the FIELD SET MODE.

(3) Select the MODE No. "00" with the "" button.

(4) Use the "" button to select the group No. for each group.

(Group numbers increase in the order of
1-00, 1-01, • • • 1-15, 2-00, • • • 4-15)

(5) Press "" to set the selected group No.

(6) Press "" to return to the NORMAL MODE.

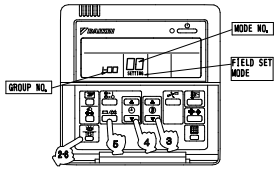

NOTE) • For details on making settings from the simplified remote controller, refer to the instruction manual of the unit.
• See the instruction manuals which came with the Ventiair and adapters(i.e., multi-purpose adapters) for details on their Group No. settings.

NOTICE Be sure to keep the operation manual for maintenance.

C: 1P191170D

30. Optional DIII Board

30.1 DAM411B51

1 Components

The following parts are attached to this unit.
Make sure to check them before installation

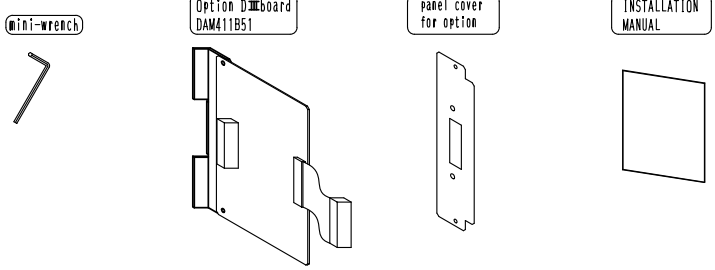

2 Outline of functions

Don't fail to turn OFF the indoor unit power switch before Interface for use in BACnet.
Failure to observe this instruction could result in electric shock.

This unit is for adding 2 port to the DIII-NET communication port by installing it on the Interface for use in BACnet® DMS502B51.

- **Make sure to connect the unit with 「DIII-NET master」**
  (Do not remove the master central setting connector.)
  When using together with other centralized control equipment such as central remote controllers or ON/OFF controllers, remove the master central setting connectors of the central remote controllers or ON/OFF controllers

Unit (mm)

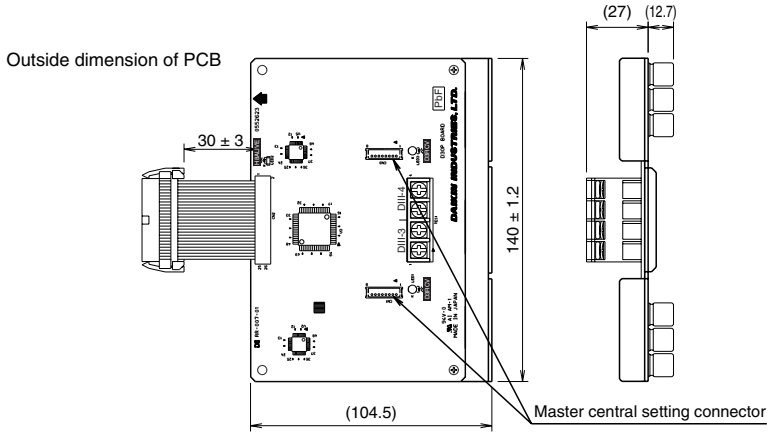

C: 1P191165C

❸ Installation

Don't fail to turn OFF the indoor unit power switch before Interface for use in BACnet. Failure to observe this instruction could result in electric shock.

Before installing the PCB, check that the power supply is turned OFF.
Since PCB's are weak to static electricity, make sure to remove the static electricity accumulated in the worker's body.
(The accumulated static electricity can be removed by touching the earthed controlboard and the like.)

① Remove the front cover of Interface for use in BACnet and remove the blind cover attached to the front cover with the attached mini-wrench.

Caution: Keep the removed screws. These screws for fixing the front cover and the blind cover(2 for each) will be required for reassembling.

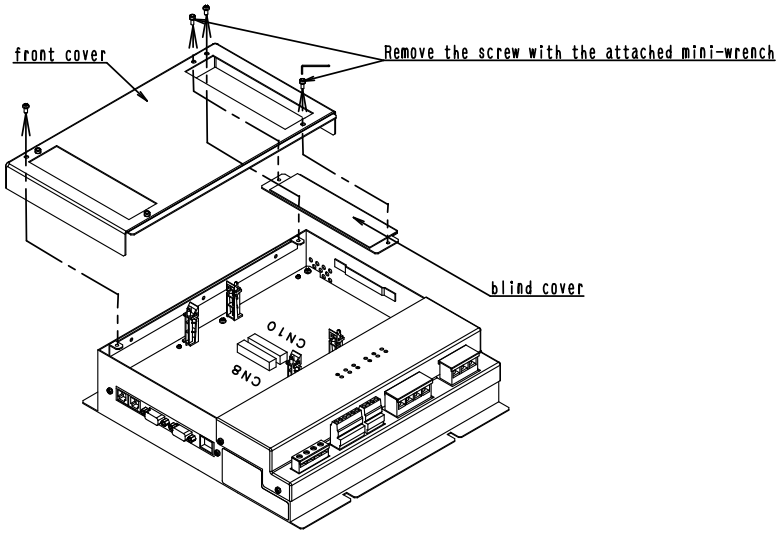

② As shown in the figure below, insert the connector DⅢboard into the connector CN10 of Interface for use in BACnet until it clicks, then hook the latch of DⅢboard to the hook hanger, and put the hole of DⅢboard into the spacer and fix it.

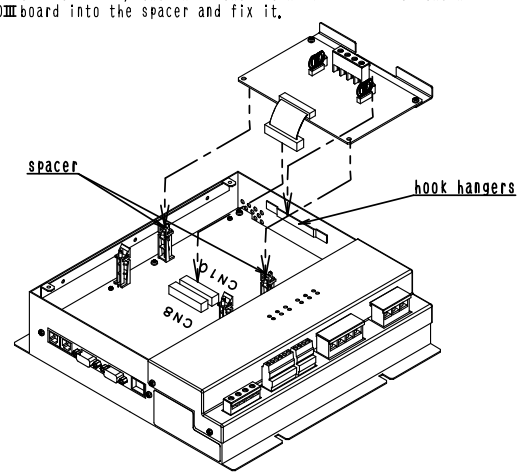

③ Fix the panel cover for option to the front cover with the attached mini-wrench.
After that, fix the front cover to Interface for use in BACnet.

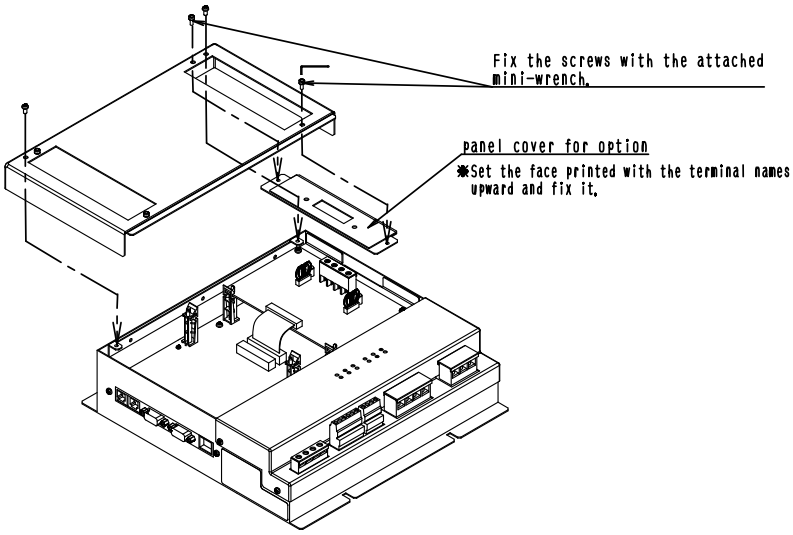

1P191165C

4 For external wiring

(Do not fail to use a round crimp terminal with reinforcing sleeve for safety wiring connection to the Interface for use in BACnet.)

■ **Everything relating with field wiring must be supplied in the field.**

1. DIII-NET Wiring

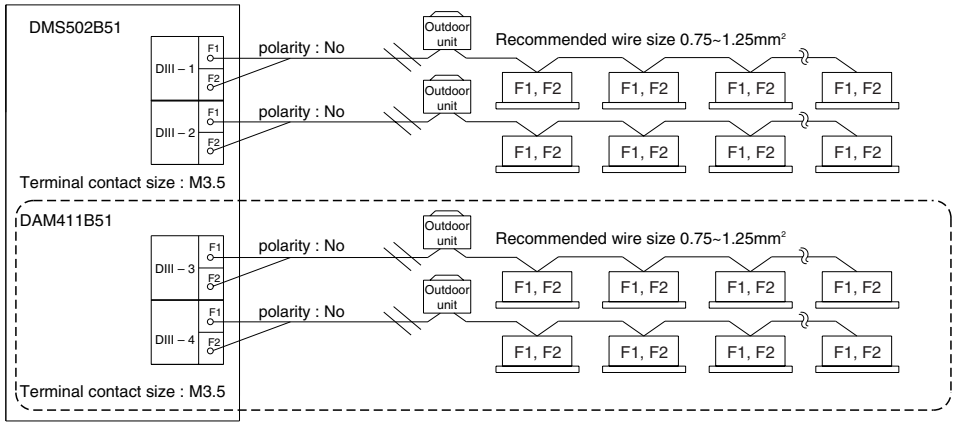

LED display
This unit has the following LED display. When each corresponding port transmits or receives the data the LED flashes.

Cautions for wiring
1. Do not use multicore cables with three or more cores
2. Use wires of sizes between 0.75mm² and 1.25mm²
3. Wire length:Max 1000m
4. Do not bind the wires for DIII-NET
5. Wirings for DIII-NET must be isolated from the power lines.
6. Terminal contact size :M3.5

5 Setting group No. for centralized control

Set the group number of each group of the indoor unit from the remote controller. (In case of no remote controller, also connect the remote controller and set the group No. Then, remove the remote controller.)

(1) Turn ON the power of the indoor unit and Interface for use in BACnet.
(Unless the power is ON, no setting can be made.)
Check that the installation and electrical wiring are correct before turning the power supply ON.
(When the power supply is turned ON, all LCD appear once and the unit may not accept the operation for about one minute with the display of "88".)

(2) While in the normal mode, hold down the "[SET]" button for a minimum of 4 seconds.
The remote controller will enter the FIELD SET MODE.

(3) Select the MODE No. "00" with the "[▲▼]" button.

(4) Use the "[▲▼]" button to select the group No. for each group.
(Group numbers increase in the order of
1-00, 1-01, • • • 1-15, 2-00, • • • 4-15)

(5) Press "[CLEAR]" to set the selected group No.

(6) Press "[SET]" to return to the NORMAL MODE.

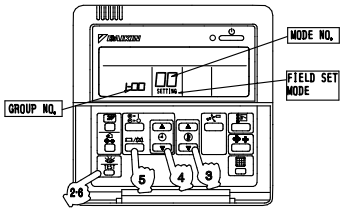

NOTE) • For details on making settings from the simplified remote controller, refer to the instruction manual of the unit.
• See the instruction manuals which came with the Ventiair and adapters(i.e., multi-purpose adapters) for details on their Group No. settings.

NOTICE Be sure to keep the operation manual for maintenance.

C: 1P191165C

31. Optional Di Board

31.1 DAM412B51

2

1 Components

The following parts are attached to this unit.
Make sure to check them before installation

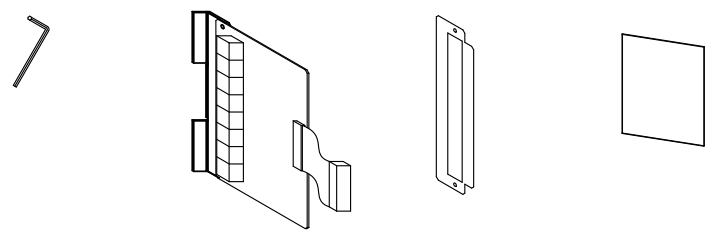

2 Outline of functions

Don't fail to turn OFF the indoor unit power switch before Interface for use in BACnet.
Failure to observe this instruction could result in electric shock.

This unit is for 12 points of Di input (no voltage contact input) by installing it on the Interface for use in BACnet® DMS502B51.

Unit (mm)

Outside dimension of PCB

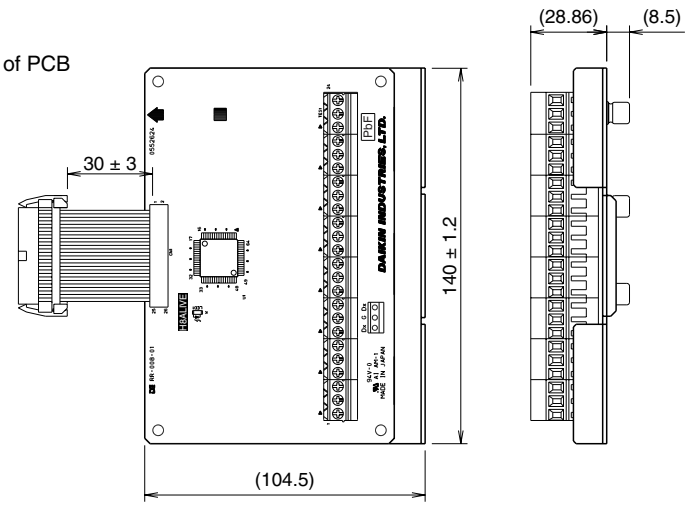

C: 1P191166D

❸ Installation

Don't fail to turn OFF the indoor unit power switch before Interface for use in BACnet.
Failure to observe this instruction could result in electric shock.

Before installing the PCB, check that the power supply is turned OFF.
Since PCB's are weak to static electricity, make sure to remove the static electricity accumulated in the worker's body.
(The accumulated static electricity can be removed by touching the earthed controlboard and the like.)

① Remove the front cover of Interface for use in BACnet(DMS502B51) and remove theblind cover attached to the front cover with the attached mini-wrench.

Caution: Keep the removed screws. These screws for fixing the front cover and the blind cover(2 for each) will be required for reassembling.

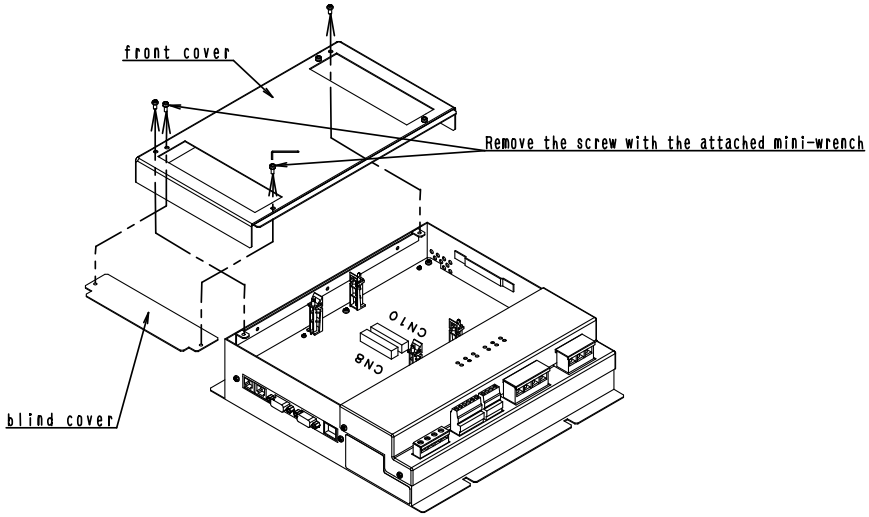

② As shown in the figure below, insert the connector Di board into the connector CN8 of Interface for use in BACnet until it clicks, then hook the latch of Di board to the hook hanger, and put the hole of Di board into the spacer and fix it.

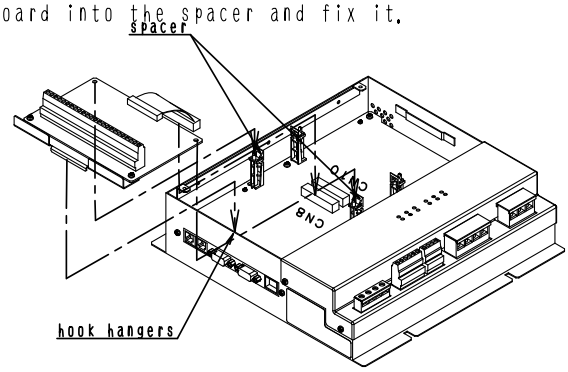

③ Fix the panel cover for option to the front cover with the attached mini-wrench.
After that, fix the front cover to Interface for use in BACnet.

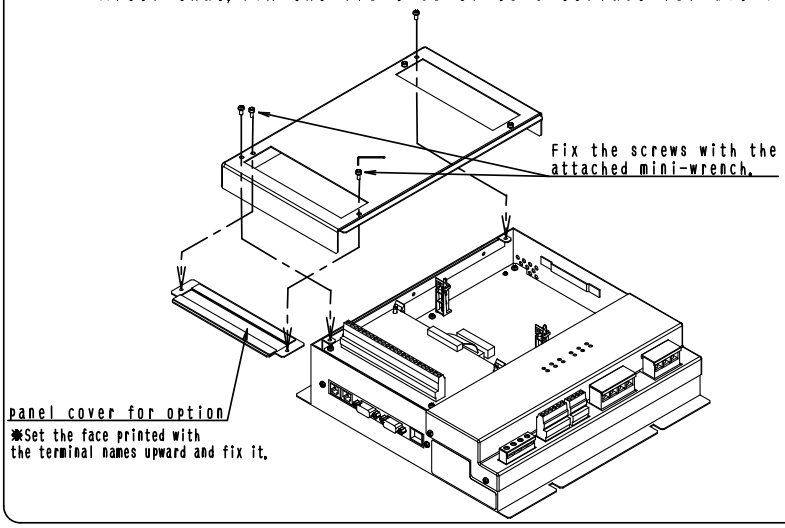

1P191166D

❹ For external wiring

■Everything relating with field wiring must be supplied in the field.

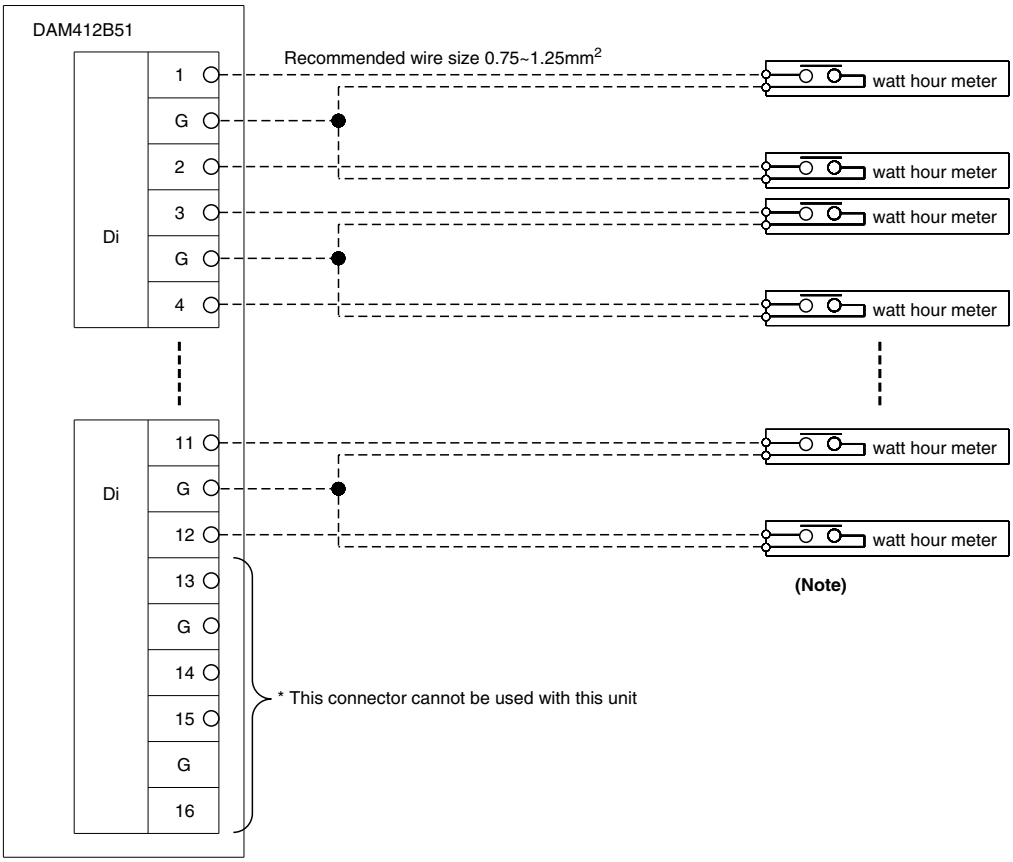

Note:
Use a meter that outputs one pulse of a width from 100~400ms, per one kWh.

The pulse of watt hour meter

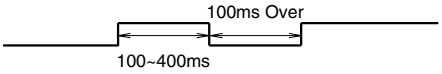

● **Cautions for wiring**

1. The input are all the no voltage contact
2. Use a contact which can guarantee minimum application load DC16V and 10mA
3. Do not use multicore cables with three or more cores
4. Use wires of sizes between 0.75mm^2 and 1.25mm^2
5. Do not bind the wire for control
6. Wirings for control must be isolated from the power lines
7. Terminals G are inter-connected. Connecting to either one is allowed, but the number of cables connectable to one terminal is limited to 2 pieces
8. Wire length : Max 150m

C: 1P191166D

32. Interface for use in LonWorks®

32.1 DMS504B51

32.1.1 Installation Manual

This manual must be read prior to installation.
Make sure the power supply is off
when carring out the installation.

WARNING
This is a class A product. In a domestic environment this product may cause radio interference in which case the user may be required to take adequate measures.

Please carefully read the "Safety Precautions" as follows and install the controller as instructed.

- The precautions given herein are classified as " ! WARNING" and " ! CAUTION". However, particular precautions which, unless they are observed in installing that could result in death and serious injury are identified by " ! WARNING". Needless to say even other precautions which are not identified by "! CAUTION" could lead to a serious accident unless they are observed. Therefore, please do not fail to observe these precautions.
- After completion of the installation, please conduct a test run on the controller to check that it is free from any fault and in addition simultaneously instruct the user how to operate and maintain it correctly (in accordance with the Operation Manual).
  Furthermore, request the user to keep this manual together with the Operation Manual for future reference.

⚠ WARNING

The installation work must be requested by the dealer.
Installation by user himself could cause electric shock, fire, etc.

Install correctly in accordance with this installation manual.
Incorrect installation, if any, may cause electric shock, fire, etc.

Installing; don not fail to use the accessories and specific parts which are supplied together with the indoor unit.
Failure to observe this instruction may cause electric shock, fire, etc.

Perform correctly the electric wiring connection using the specified cables and firmly clamp each terminal connector to prevent cable load from being transferred thereto.
Unstable and improper cable connecting and clamping could cause overheat, fire, etc.

⚠ CAUTION

Grounding.
Do not connect the grounding wire to any of gas pipes, city water pipes, lightning rods, or telephone grounding wire. Imperfect grounding would cause electric shock.

Avoid installing at the following locations.
1. Cuisine and other place where the controller is inevitably exposed to mineral oil, scattered oil or steam. Installing at such places could cause deterioration of the resin parts, corrosion or short circuit.
2. Where corrosive gases such as sulfur dioxide generate inevitably.
3. Where a machine as generates electromagnetic waves. Installing at such a place could cause trouble of the control line and failure of normal air-conditioning operation.
4. Where leak of combustible gas is forecast and place where volatile ignitable gases such as thinner, gasoline, etc. are handled.
   Should such gas leak and accumulate around the devices, could cause igniting.

SETTING THE BACPUP BATTERY SWITCH.

1 Components

The following parts are attached to this unit.
Make sure to check them before installation.

DMS-IF
DMS504B51

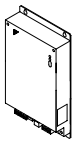

INSTALLATION MANUAL

2 Names and functions of each part

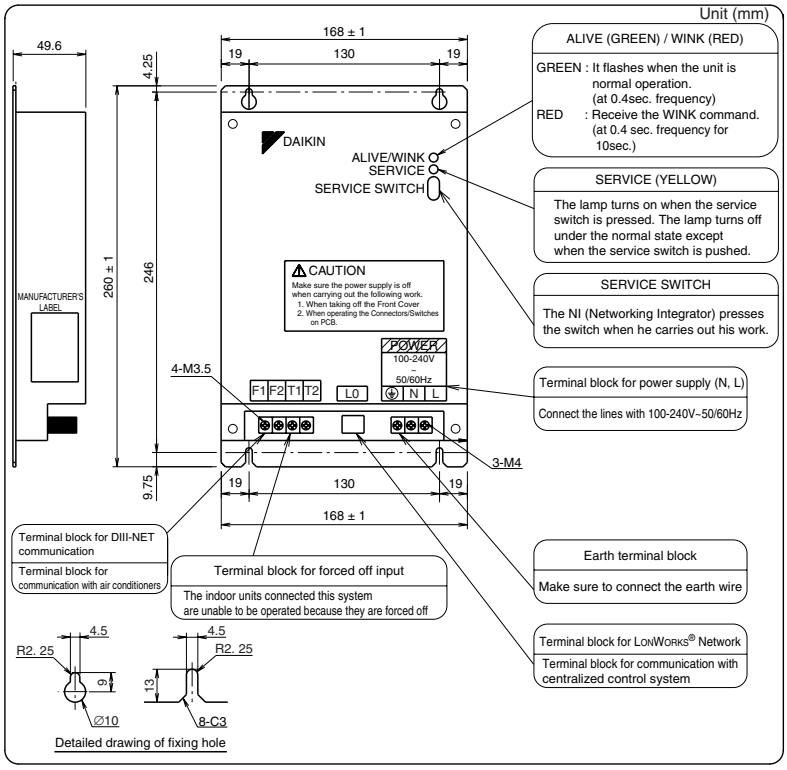

1P111315

❸ Installation

- Make sure to install the unit on the inside of the inaccessible and lockable (or needed to use exclusive tools to open) electrical component box installed indoors where the effect of electromagnetic wave or dust can be avoided.
  The minimum depth required for installation is 80mm
- Keep the minimum amount of space indicated in the below drawing from walls, and between units when installed in series.
- For installation direction follow the drawing shown below.

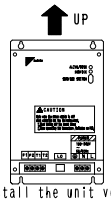

Make sure to install the unit vertically. Do not install the unit horizontally, because it may cause malfunction.

1)Electrical rating	(1)Rated voltage and frequency : Single phase AC100~240V 50/60Hz	
	(2)Rated power consumption : maximum 5W	
2)Conditions	(1)Power supply fluctuation : ±10%	
	(2)Ambient temperatyre : -10~+50℃	
	(3)Ambient humidity : 0~95% (Sweating is not acceptable)	
	(4)Preservation : -20~+60℃	
3) Performance : Insulation resistance : 50MΩ or more by DC500 megohmmeter		
4)Mass : 1.5Kg		
5)Colour of the unit : stainless steel sus304-NO.4		

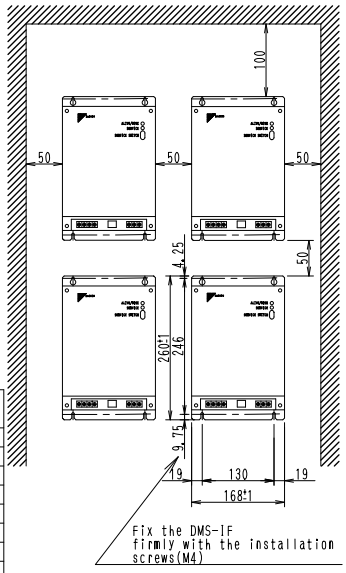

❹ Electric Wiring Connection

- Use a round crimp terminal with reinforcing sleeve for safety wiring connection to the Interface for use in LonWorks® except the terminal for LonWorks® Network.

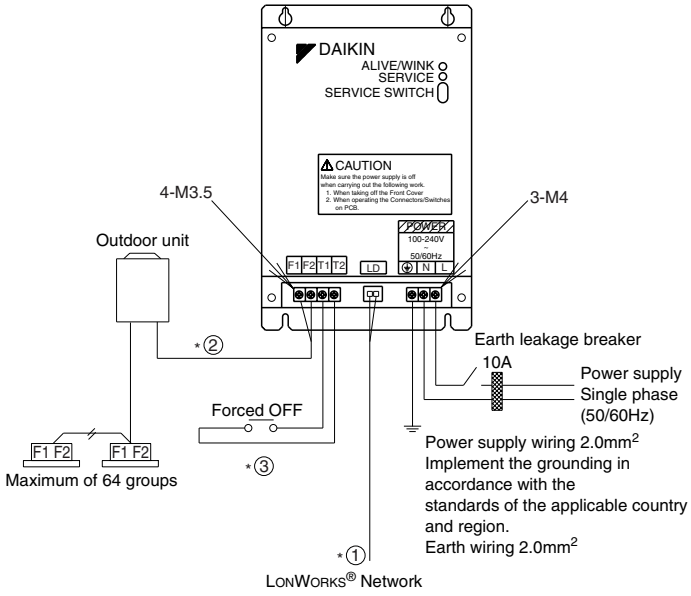

❺ Wiring specification

■Everything relating with field wiring must be supplied in the field.

※① LonWorks® Network communication wiring

Use the dedicated line for the LonWorks®Network.

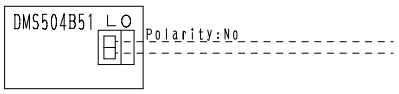

※② D Ⅲ-NET wiring

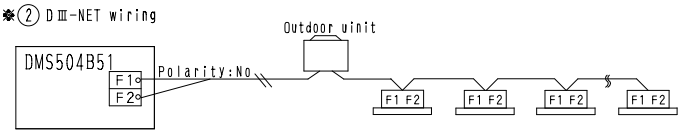

1. Do not use multicore cables with three or more cores.
2. Use wires of sizes between 0.75mm² and 1.25mm²
3. Wire length:Max 1000m

1P111315

4. Do not bind the wire for DⅢ-NET
5. Wirings for DⅢ-NET must be isolated from the power lines.
6. Terminal contact size:M3.5

※③ Forced OFF

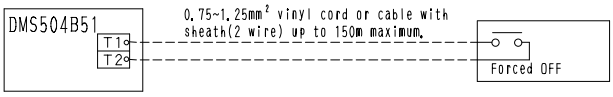

Cautions for wiring
When Forced OFF INPUT is kept on, the indoor units connected this system are unable to be operated because they are Forced OFF.

1. Use a no voltage contact.
2. Use a contact which can guarantee minimum application load DC16V and 10mA.
3. Do not use multicore cables with three or more cores.
4. Wirings must be isolated from the power lines.
5. Terminal contact size:M3.5.

❻ Names and functions of P.C.B ASSY

① How to open the cover

- Remove the 4 screws as shown in the drawing below
- Slide the cover upward
- Lift the cover to the front as shown in the drawing

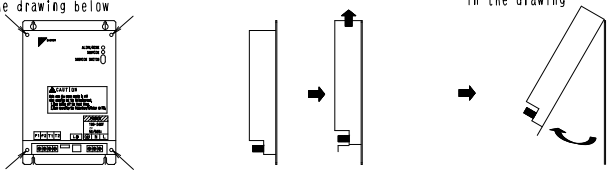

② Names and functions of P.C.B ASSY

Backup battery switch
- **Turn ON** the switch to bring the backup battery effective. This mark ■ shows the swtich position when DMS-IF is shipped out of the factory

LED display
LED3 turns on during the battery is charged. Even after the battery is completely charged, the lamp slightly turns on.
LED2 flashes (at 0.4sec frequency) when the CPU for DⅢ-Net communication is normal.
LED1 flashes when receiving data by DⅢ-Net communication.

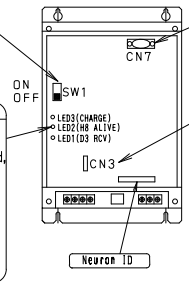

Connector for service PC
- This connector is to be connected to the PC when commissioning is carried out by a service person

Connector for setting the master of centalized control
- The connector must be permanetly connected (The connector is connected when shipped out of the factory. Do not pull out the connector)

Since the control substrate is weak to static electricity, do not touch the parts on the substrate. Make sure to dischange static electricity from human body before starting the work. (Static electricity can be discharged by touching the sheet metal of the control panel which is earthed)

❼ 「DⅢ-NET master」 setting

Make sure to connect the unit with 「DⅢ-NET master」

❽ Setting the backup battery switch

When shipped out of the factory, the backup battery switch is turned off (the battery is ineffective).
Turn ON the switch for backup of set data such as the information regarding the network variables at power failure.
- Guaranteed hours of power failure. One month (31days)
- The lithium battery is used and is rechargeable. After the power is restored it is necessary to continuously electrify the battery for approximately one day until the it is completely charged. (The battery is completely charged when shipped out from the factory.)

❾ Setting group No. for centralized control

Turn ON the power to the DMS-IF Following the below procedure, set the group numbers for the indoor units connected to the DⅢ-NET. This group number is set for each indoor unit system.
(When not using the remote controller, the remote controller is to be connected just for making settings but must be disconnected when finished.)

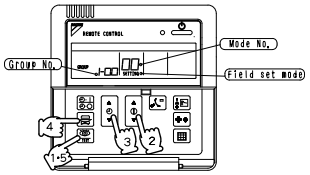

Pre-para-tions	● Check no troubles exist with installation and wiring before turning ON the power. ● Turn ON the power to the indoor unit and DMS-IF. Setting is not possible with the power OFF.

● Nothing is wrong with the equipment if "88" is displayed when power is turned ON. This may happen and the unit may not respond to operation, but the situation should last only a moment.

1	Hold down TEST for 4 seconds or more to enter the field set mode.
2	Press ⇕ and set the mode NO. to "00"
3	Press ⇕ and set the group NO. Group NO. increases in the order of 1-00, 1-01 ... 1-15, 2-00,... 4-15. Set the group NO. when "GROUP" on the liquid crystal display is flashing. Press the ⊠ button to initiate flashing of "GROUP" on the liquid crystal display.
4	Press ⊠ to set the group NO.
5	Press TEST. This will return the system to the normal mode.

- For details on making settings from the simplified remote controller, refer to the instruction manual of the unit.
- For details on making settings of the group NO. of the Ventilaire or adapters (wiring adapter for other air conditioners, etc.), refer to the instruction manual of the said unit.

1P111315

32.1.2 System Wiring Diagram

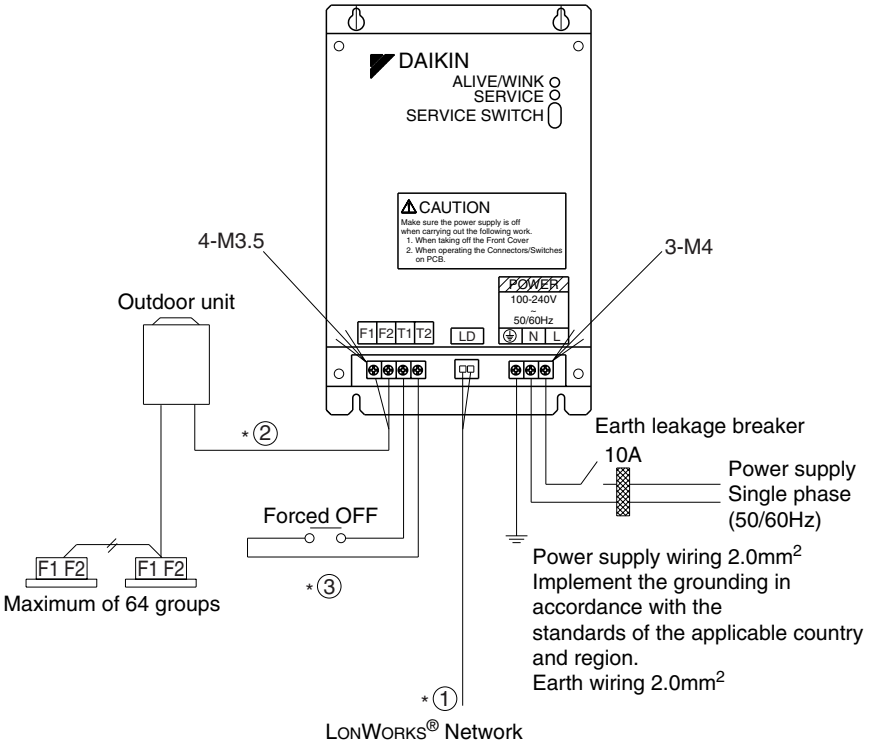

3D040974

NO ※	Wiring specification
①	● LonWorks®Network Communication wiring Use the dedicated line for the LonWorks®Network 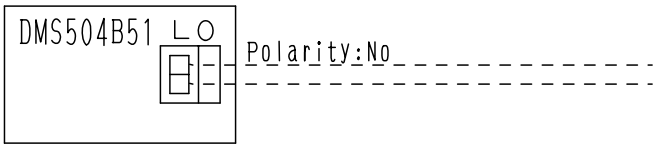
②	● DⅢ-NET wiring 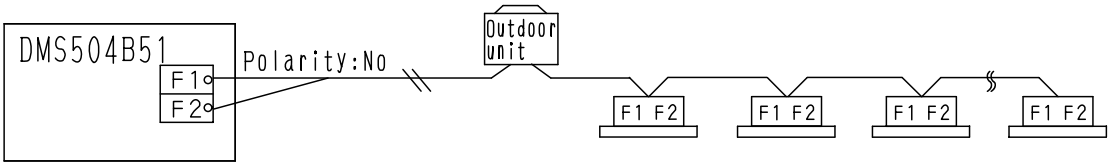 Cautions for wiring 1. Do not use multicore cables with three or more cores. 2. Use wires of sizes between 0.75mm² and 1.25mm² 3. Wire length:MAX 1000m 4. Do not bind the wire for DⅢ−NET 5. Wirings for DⅢ−NET must be isolated from the power lines. 6. Terminal contact size :M3.5
③	● Forced OFF input 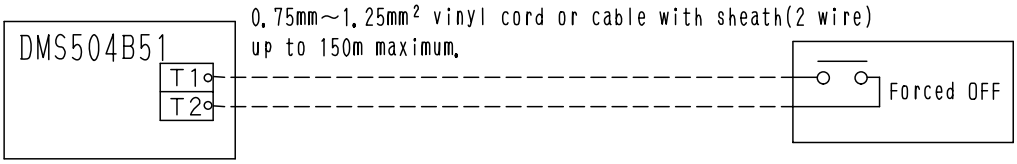 When forced OFF input is kept on, the indoor units connected this system are unable to be operated because they are forced off. 1. Use a no voltage contact. 2. Use a contact which can guarantee minimum application load DC16V and 10mA 3. Do not use multicore cables with three or more cores. 4. Wirings must be isolated from the power lines. 5. Terminal contact Size:M3.5

Everything relating with field wiring must be supplied in the field.

3D040974

1. Object Request Input(Node Request)
It features objects for a group of 64 indoor units.
As shown below, the object name and the last " _nn" in the " nv Name" correspond with the DⅢ-NET location setting address.

Table 1 Object Request Input

Controlling items	nv Name	TYPE	(Value, State) :Operation
On/OFF Command	nviOnOff_nn	SNVT_switch	(0, 1) or (★, 0) : OFF , (>0, 1) : ON
Operation Mode Setting	nviHeatCool_nn	SNVT_hvac_mode	0 :Auto 1 : Heating 3 : Cooling 9 : Ventilation
Temperature Setting	nviSetpoint_nn	SNVT_temp_p	Temperature ℃
Airflow Rate Setting	nviFanSpeed_nn	SNVT_switch	(0<value<=100, 1) : low, (>100, 1) : high
Filter Sign Reset	nviFSReset_nn	SNVT_switch	value= 0 or 1 : Reset
Forced Thermostat OFF Setting	nviThermoOff_nn	SNVT_switch	(0, 1) or (★, 0) : Reset, (>0, 1) : OFF Setting
Remote ON/OFF Control Rejection	nviRejOnOff_nn	SNVT_switch	(0, 1) or (★, 0) : permitted, (>0, 1) : Prohibited
Remote Operation Mode Control Rejection	nviRejMode_nn	SNVT_switch	(0, 1) or (★, 0) : permitted, (>0, 1) : Prohibited
Remote Temperature Setting Control Rejection	nviRejSetpoint_nn	SNVT_switch	(0, 1) or (★, 0) : permitted, (>0, 1) : Prohibited
System Forced OFF Setting	nviSystemOff	SNVT_switch	(0, 1) or (★, 0) : Reset, (>0, 1) : Forced OFF
Sub Group Address Control Rejection Setting	nviRejLC	SNVT_switch	(0, 1) or (★, 0) : permitted, (>0, 1) : Prohibited

★ Any (0～255)

The system is designed to keep the memory of the set conditions even when the air conditioner stops due to a power failure. Each time when the setting of temperature, ON/OFF, heat/cool mode, or air volume is changed, it is written into the non-volatile memory. The frequency of writing the setting into the non-volatile memory is limted and if the setting is frequently written into the memory after exceeding the limit, it may cause malfunction.
Therefore, take caution so that the frequency of changing the setting of each indoor unit may not exceed 7000 times/year when changing the setting of temperature, ON/OFF, heat/cool mode, or air volume frequently by automatic control or the like from the central monitoring panel.

2. Object Status Output (Object Status)

Table 2 Object Status Output

Monitoring items	nv Name	TYPE	(Value, State) :Condition
ON/OFF Status Report	nvoOnOff_nn	SNVT_switch	(0, 0) : OFF, (200, 1) : ON
Operation Mode Status Report	nvoHeatCool_nn	SNVT_hvac_mode	1 : Heating 3 : Cooling 9 : Ventilation
Temperature Setting Report	nvoSetpoint_nn	SNVT_temp_p	Temperature ℃
Room Temperature Report ★2	nvoSpaceTemp_nn	SNVT_temp_p	Temperature ℃
Airflow Rate Setting Report	nvoFanSpeed_nn	SNVT_switch	(100, 1) : low, (200, 1) : high
Filter Sign Report	nvoFiltersign_nn	SNVT_switch	(0, 0): No Filter Sign, (200, 1) : Filter Sign
Error Status Report	nvoFailure_nn	SNVT_switch	(0, 0) : Nomal, (200, 1) : Error
Error Code Report	nvoErrStatus_nn	SNVT_count	0 : Normal, >0 Error Code 2-character ASCII decimal code ★1
Thermostat Status Report	nvoThermo_nn	SNVT_switch	(0, 0) : OFF, (200,1) : ON
Forced Thermostat OFF Setting Status Report	nvoThermoOff_nn	SNVT_switch	(0, 0) : Reset, (200, 1) : OFF Setting
Remote ON/OFF Operation Rejection Report	nvoRejOnOff_nn	SNVT_switch	(0, 0) : Permitted, (200, 1) : Prohibited
Remote Control Operation Mode Setting Rejection Report	nvoRejMode_nn	SNVT_switch	(0, 0) : Permitted, (200, 1) : Prohibited
Remote Control Temperature Setting Operation Rejection Report	nvoRejSetpoint_nn	SNVT_switch	(0, 0) : Permitted, (200, 1) : Prohibited
System Forced OFF Setting Report	nvoSystemOff	SNVT_switch	(0, 0) : Reset, (200, 1) : Forced OFF
Sub Group Address Control Operation Rejection Setting Report	nvoRejLC	SNVT_switch	(0, 0) : Permitted, (200, 1) : Prohibited
A/C Communication Statuss Report	nvoHvacExist_nn	SNVT_switch	value=0 : No connection 1 : Normal Connection 2 : Communication error state=1

[NOTE]
When the Front Cover is removed, Neuron ID is shown on P.C.B.

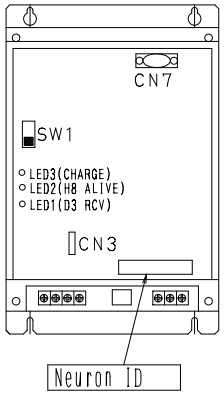

★1 These error codes are shown in a 2-character ASCII decimal code specified by DAIKIN.

★2 As the indoor fan stops when the operation is in special operation mode such as thermostat off, at rest or defrosting, the 'Room Temperature Report' is affected by the heat exchanger and the sensor may happen to detect the temperature different from that to the indoor and transmit the signal. Due to the above mentioned reason, consider the temperature as a rule of thumb. If the system control is to be based on this temperature (such as changeover of operation mode and changing the set temperature), the manufacturer of the building management system is kindly requeated to carry out on its own responsibility.

Model Name	DMS504B51 DMS504C71
XIF File	DMS_IF02.XIF

3D040975B

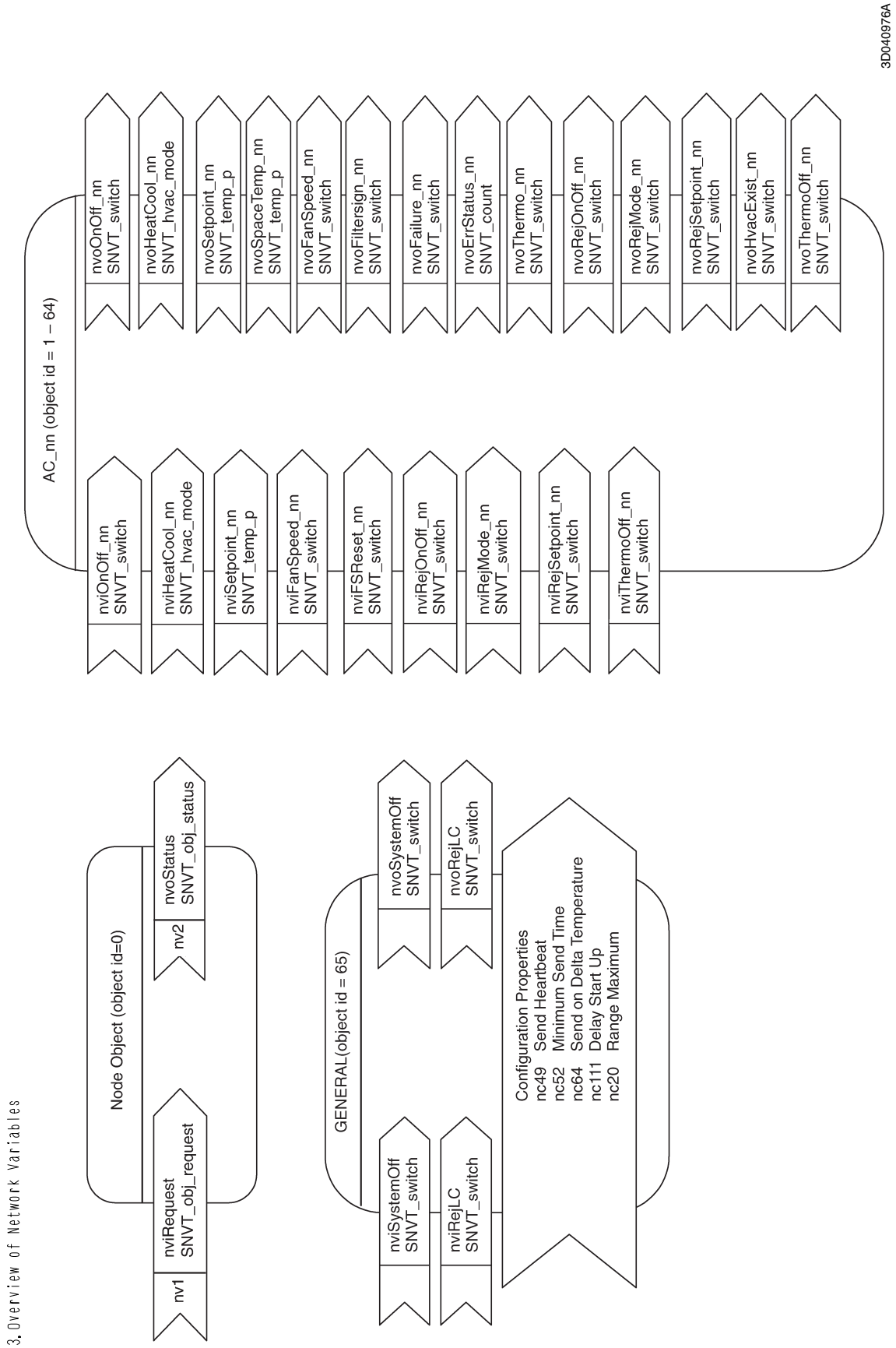

3. Overview of Network Variables

33. Home Automation Interface Adaptor

33.1 DTA116A51

DⅢ-NET/Modbus Communication adaptor Installation Manual

DTA116A51

Also see installation manual attached to equipment you connect.
Please read these "SAFETY PRECAUTIONS" carefully before installing option adaptor and be sure to install it correctly.

●They both contain important information regarding safety. Be sure to observe all precautions without fail.

⚠ WARNING	Failure to follow these instructions properly may result in personal injury or loss of life.
⚠ CAUTION	Failure to observe these instructions properly may result in property damage or personal injury, which may be serious depending on the circumstances.

●After completing installation, conduct a trial operation to check for faults.
Ask the customer to store the installation manual.

⚠ WARNING

- ●Ask your dealer or other qualified personnel to carry out installation work
  Do not attempt to install the unit yourself. Improper installation may result in an electric shock or fire.
- ●Do not relocate or reinstall the unit yourself
  Improper installation work may result in an electric shock or fire.
  Ask your local dealer to carry out relocation and reinstallation of the unit.
- ●Install the unit in accordance with the instructions in this installation manual
  Improper installation may result in an electric shock or fire.
- ●Be sure to use only the specified accessories and parts for installation work
  Failure to use the specified parts may result in the unit falling, an electric shock, or fire.
- ●Always perform installation work with the power supply shut off
  Touching energized electric parts causes an electric shock.
- ●Do not disassemble, modify or repair the unit
  An electric shock or fire may be caused.
- ●Make sure that all wiring is secured, that the specified wires are used, and that there is no strain on the terminal connections or wires
  Improper connection or securing of wires may result in abnormal heat build-up or fire.
- ●The choice of materials and installations must comply with the applicable national and international standards
- ●Make sure that a separate power supply circuit is provided for this unit and that all electrical work is carried out by qualified personnel according to local laws and regulations and this installation manual
  An insufficient power supply capacity or improper electrical construction may lead to an electric shock or fire.
- ●When wiring the power supply and connecting the transmission wiring, position the wires so that the electric parts box lid can be securely fastened
  Improper positioning of the electric parts box lid may result in an abnormal heat buildup, an electric shock, or fire.

⚠ CAUTION

- ●Be very careful about product transportation
- ●Safely dispose of the packing materials
  Tear apart and throw away plastic packaging bags so that children will not play with them.
  If children play with a plastic bag which was not torn apart, they face the risk of suffocation.
- ●In a domestic environment, this product may cause radio interference
  In such case, the user may be required to take adequate measures.
- ●Disposal requirements Dismantling of the unit, treatment of the refrigerant, of oil and of other parts must be done in accordance with relevant local and national legislation
- ●Fill the wiring through hole with putty
  Entry of water or insects may result in electric leakage or malfunction.
- ●Do not operate with wet hands
  An electric shock and malfunction may be caused.
- ●Do not wash this unit with water
  An electric shock or fire may be caused.

❶ System Outline

This adaptor is an interface which is requeired to monitor and control the indoor unit from the Home Automation System manufactured by the other companies. It can stop the indoor unit operation, monitor and control the operation mode, preset temperature, air flow rate and direction via Modbus communication.
It can also carry out emergency supervisory, monitor and reset the filter sign.

1P351712B

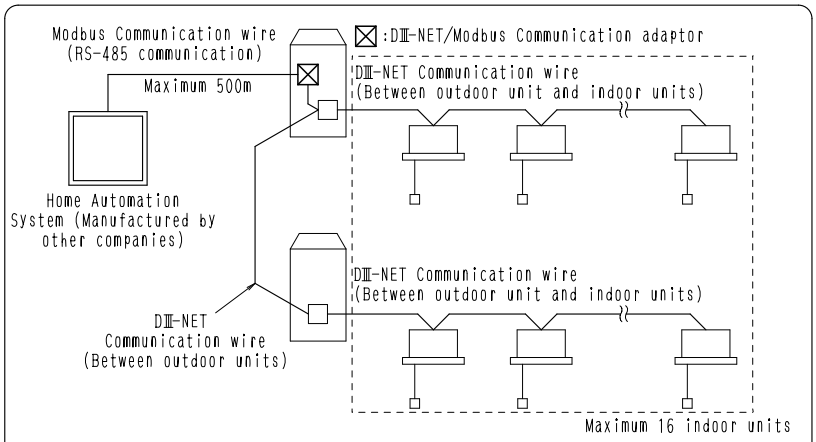

Note
- The total wiring length of the RS-485 communication wire must be within 500m.
- Maximum number of units which can be connected is 16 units for the indoor unit and 2 units for the outdoor unit.

❷ Accessories

The follwing items are packed.

Name	①DⅢ-NET/Modbus Communication adaptor
Form	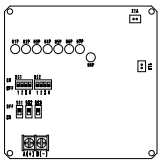
No. of pcs.	1

Name	Accessories bag (TypeA)	Accessories bag (TypeB)	Installation Manual
No. of pcs.	1	1	1

Accessories bags use either TypeA or TypeB.
This is determined by the outdoor unit series.

Contents of accessories bag

●TypeA

Application model of outdoor unit

Series	Model name
VRVⅢ-S	RXYMQ-PVE, RXYMQ-PV4A, RXYMQ-PVET, RXMQ-PVE

Name	②Wire of power supply (White/Black)	③Wire of DⅢ-NET Communication (Orange/Yellow)	④Clamp material
No. of pcs.	1 set		1

●TypeB

Application model of outdoor unit

Series	Model name
VRVⅢ	RXYQ-PAY1(E), RXYQ-PAYC(E), RXYQ-PAYL(E), RXYQ-PTL(E) RXYQ-PYLT, RXYQ-PTLT, RHXYQ-SYL, RXQ-PAY1
VRVⅢ-Q	RQCEQ-PY1

Name	⑤Wire of power supply (White/Black)	⑥Wire of DⅢ-NET Communication (Orange/Yellow)	⑦PCB Support	⑧Clamp material	⑨Wire clip
No. of pcs.	1	1	4	1	3

1P351712B

❸ Parts name and function

DIP Switch(DS1/DS2)

This is the operation setting switch for DⅢ-NET/Modbus communication adaptor.

LED(H1P～H7P:ORANGE)

This lamp to display the status of the communication.

Service Monitor LED(HAP:GREEN)

This lamp flashes while the CPU is operating normally.

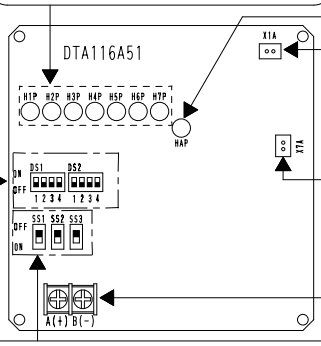

Power Supply Connector(X1A)

Connector to supply DC16V from PCB ASSY in the outdoor unit.

DⅢ-NET communication connector(X7A)

Connector to connect the DⅢ-NET communication wire.

Terminal block for Modbus communication(X2M)

Termminal block to connect the Modbus communication wire.

Terminating Resistance(SS1/SS2/SS3)

Setup the terminating resistance for Modbus Communication wire.

❹ Mounting Method

●TypeA(VRVⅢ-S:RXYMQ-PVE, RXYMQ-PV4A, RXYMQ-PVET, RXMQ-PVE)
Connect the①Adaptor in the Electric component box of outdoor unit.
(Mount size of 100 × 100mm in the lower right)

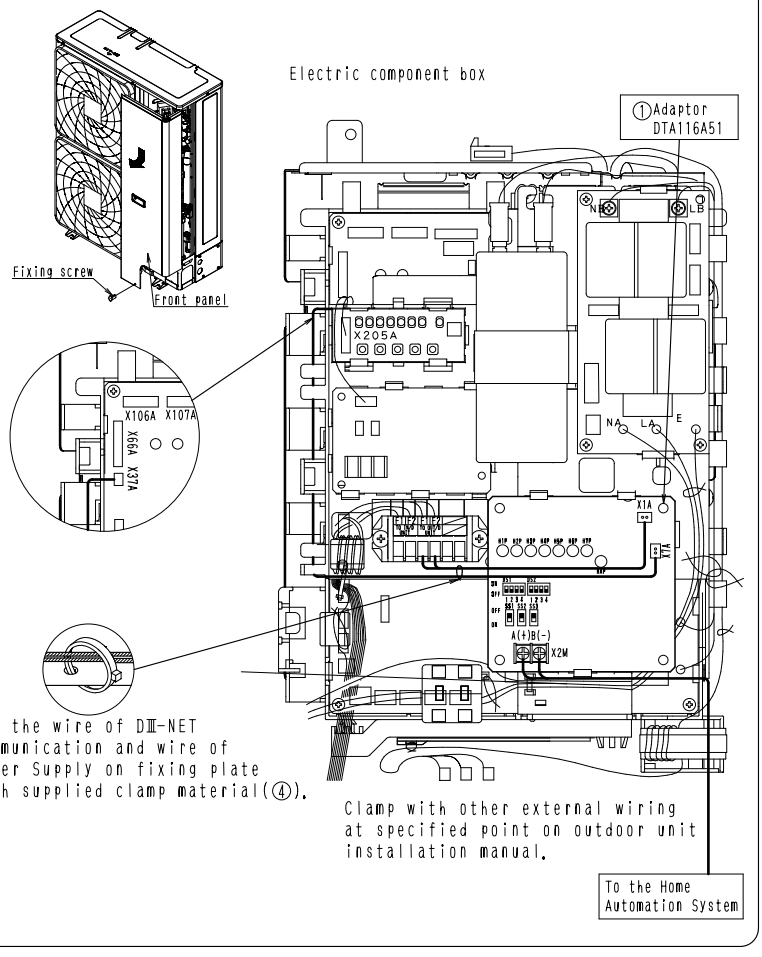

TO BACK

1P351712B

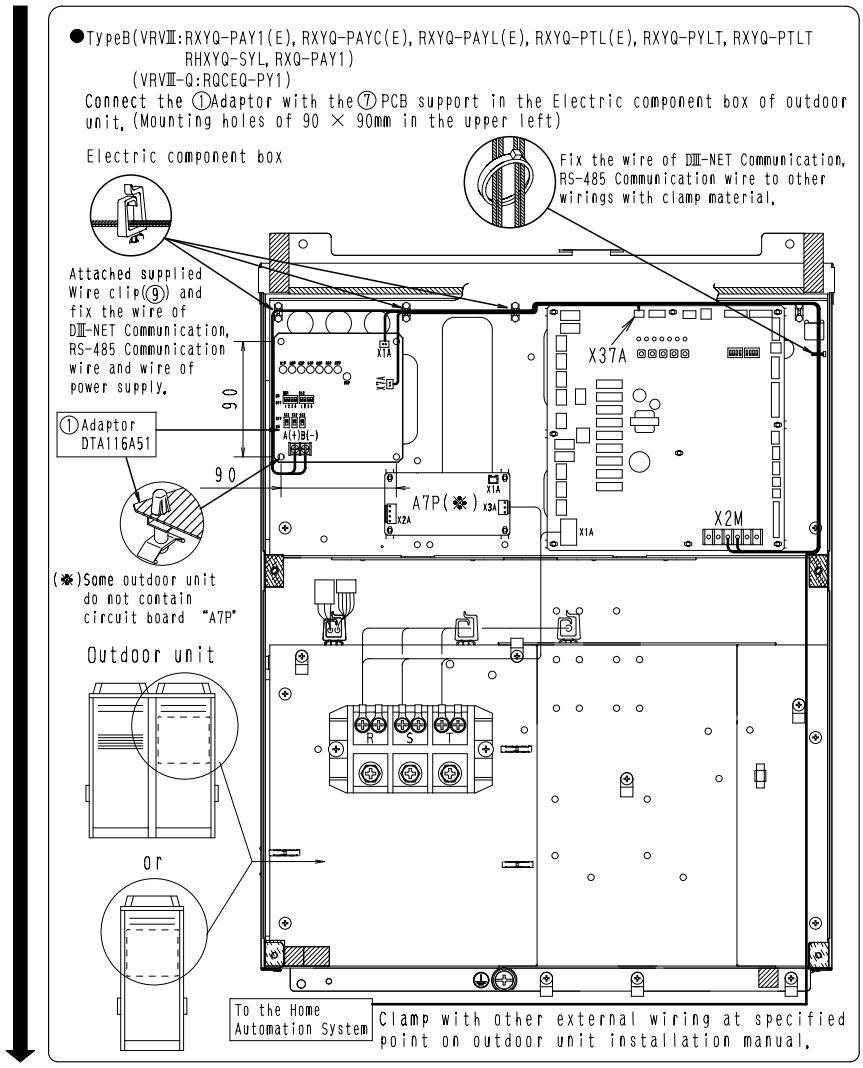

⑤ Electric Wiring

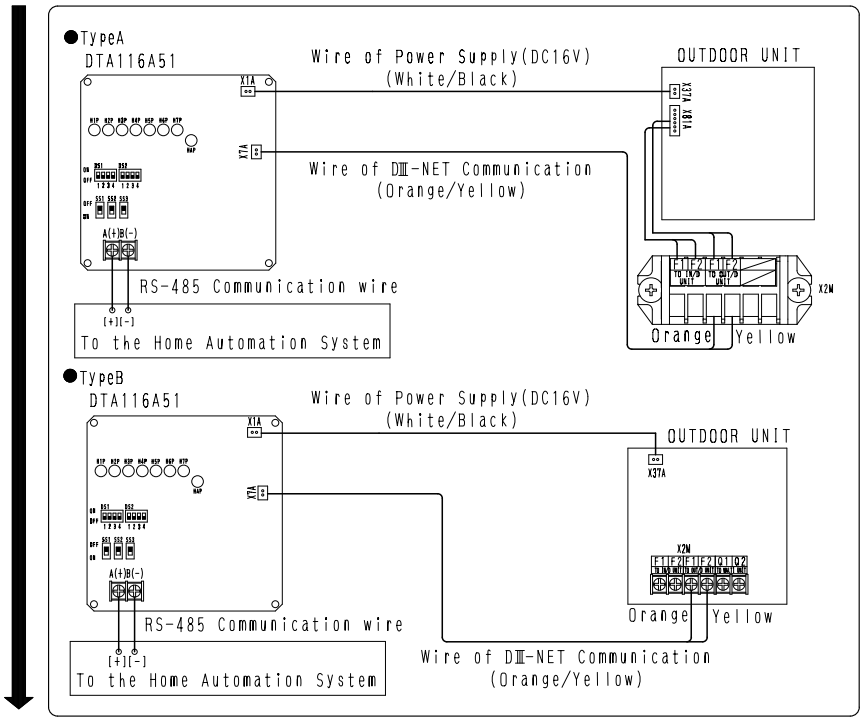

1P351713A

(1)Power Supply wiring (TypeA/TypeB common)
Connect between this adaptor connector(X1A) and outdoor unit circuit board connector(X37A) with ② or ⑤ wire of power supply.

(2)DⅢ-NET Communication wiring(DⅢ-NET)
Connect with ③ or ⑥ wire of DⅢ-NET Communication. Connecting work changes with the model of outdoor unit.
(TypeA) Connect between this adaptor connector(X7A) and terminal for communication (F1/F2 of "TO OUT/D UNIT") with ③ wire of DⅢ-NET Communication.
(TypeB) Connect between this adaptor connector(X7A) and outdoor unit circuit board terminal (F1/F2 of "TO OUT/D UNIT") with ⑥ wire of DⅢ-NET Communication.

(3)Modbus Communication wiring(Modbus:RS-485) (TypeA/TypeB common, Local procurement parts)
Connect between this adaptor Modbus Commnication Terminal(X2M) and Home Automation System Terminal.
Connect between this adaptor A[+]connector and Home Automation System Terminal +connector, B[-]connector and Home Automation System Terminal -connector.
In case of using shelding wire, do not earth with outdoor unit. Please earth with connecting device.

See ④ Mounting Method to know the wiring route.

Note
- Wire Specification of Modbus transmitting
  Use the wire thickness 0.75mm² ~ 1.25mm².
- Maximum wire length between this adaptor and Home Automation System is 500m. Over length of wire causes then transmission error. Make sure to the length of wire.
- Modbus transmission wiring has polarity. Be sure to connect after checking the polarity of wire.

⑥ Field Configration

(1)DIP Switch(DS1/DS2)
- DS1:Modbus communication setting
  Matching with your Home Automation System, setup in accordance with the table below.

No.	Item	OFF	ON
1	Unused(Note1)	-	-
2	Communication speed	9600bps	19200bps
3	Stop Bit	1	2
4	Parity Check	Even	Odd

[ ]:Factory default

(Note1) DS1-1 is not used. Please do not change.

- DS2:Address setting
  Set the address of this adaptor in accordance with the Fig. on the right.

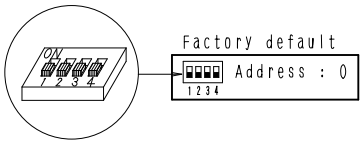

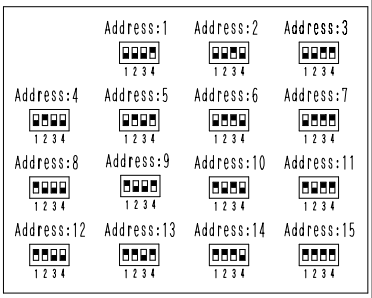

At Address:0 setting, monitoring and control can not be carried out from the Home Automation System since Modbus communication can not be performed.

(2)Terminating Resistance(SS1/SS2/SS3)
Setup the terminating resistance in accordance with the Fig. on the right.

(Note2) SS1 is not used. Please do not change.

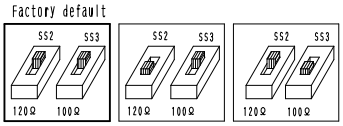

No Terminating Resistance | Terminating Resistance (120Ω) | Terminating Resistance (100Ω)

(3)Group Address setting

Note
- All indoor units be powered on before setting the DⅢ-NET address.
- The DⅢ-NET address needs to be unique between every indoor unit.

To use this adaptor, set the DⅢ-NET address on each indoor unit. Operation changes with the remote controllers to be used.

After all electrical wiring works, and all indoor/outdoor unit are powered on, set the DⅢ-NET address.

1P351713A

• Case of Navigation Remote Controller

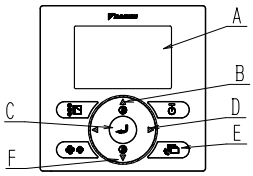

A Display
B Up button
C Menu/Enter button
D Right button
E Cancel button
F Down button

1. Press and hold the Cancel button (E) for 4 seconds or more.
   The "Filed setting" menu is displayed.

2. Using the Up button(B) and Down button(F), select "Group No. setting" and press the Menu/Enter button(C).
   The "Group No. setting" menu is displayed.

3. Using the Up button(B) and Down button(F), select "Group No. setting(Group)" and press the Menu/Enter button(C).
   The current address setting is displayed.

4. Press the Menu/Enter button(C) to release the current address setting. The mode indication changes from "Setting to Release".
   You are now ready to change the DⅢ-NET address.

5. Using the Up button(B) and Down button(F), select the address you want to set.

6. Press the Menu/Enter button(C).
   The DⅢ-NET address has been set.

7. Press the Cancel button (A) three times.
   You are now brought back to normal mode.

• Case of Wired Remote Controller

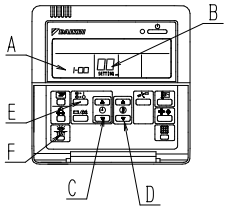

A Address display area
B Parameter number display area
C Programming time buttons
D Temperature setting buttons
E Timer ON/OFF button
F Inspection/Test operation button

1. Press and hold the Inspection/Test Operation button (F) for 4 seconds or more. "SETTING" appears in the center of remote controller display(B).

2. Using the Temperature Setting buttons (D), change the value shown in the parameter number display area (B) to "00".
   In the address display area (A), the current address setting is displayed. (This area will show "?" if no address is set.)

3. Press the Timer ON/OFF button (E) to make the "GROUP" indicator blink.
   You are now ready to change the DⅢ-NET address.

4. Using the Programming time buttons (C), select the address you want to set.

5. Press the Timer ON/OFF button (E) to make the "GROUP" indicator stay lit.
   The DⅢ-NET address has been set.

6. Press the Inspection/Test Operation button (F).
   You are now brought back to normal mode.

■ TRADEMARK
Modbus is a registered trademark of Schneider Electric S.A.

1P351713A

34. Unification Adaptor for Computerized Control

34.1 DCS302A52

34.1.1 Function

When connected to the central remote controller, this kit enables unified display (operation/ malfunction) and unified control (ON/OFF).

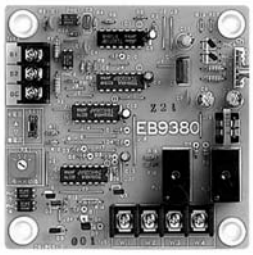

1. Unified Display (operation/malfunction) using terminals W1, W2, W3, W4

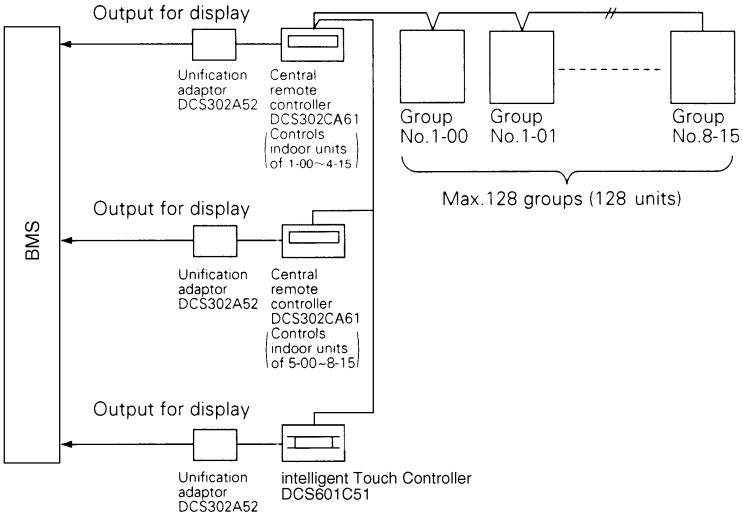

2. Unified Control (ON/OFF) using terminals B1, B2, BC

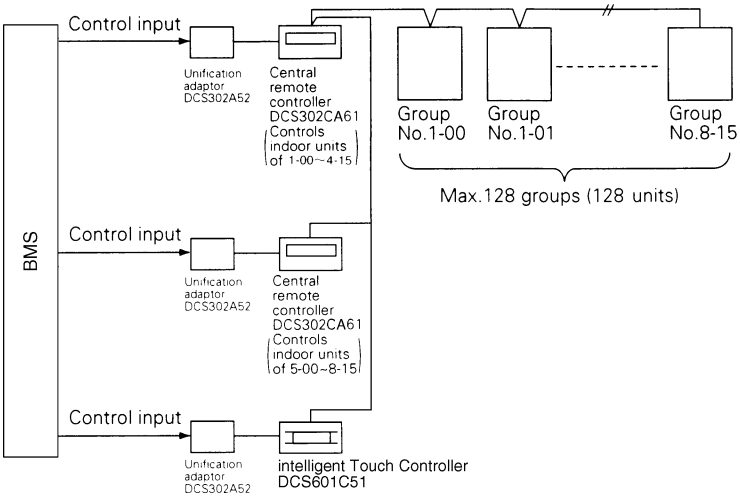

C: 2PA53489

34.1.2 Names of parts and function

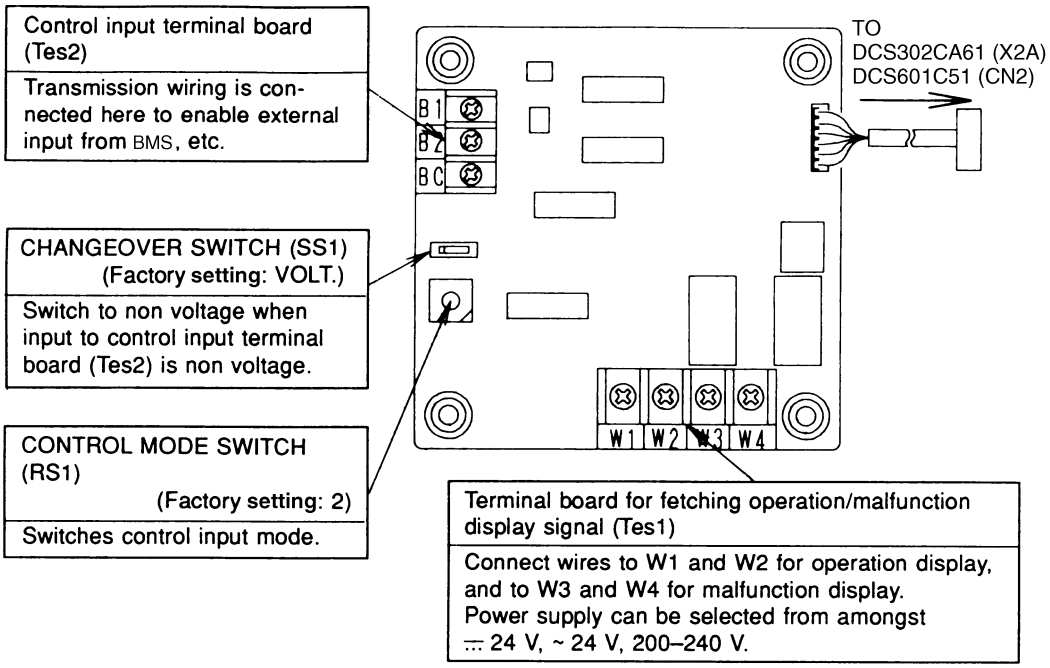

34.1.3 Installation

- Securely install the adaptor inside the electric panel box (field supplied) with the 4 attached screws.
- Install the adaptor in a place within 5 m from the central remote controller to enable cable connection.

Unit (mm)

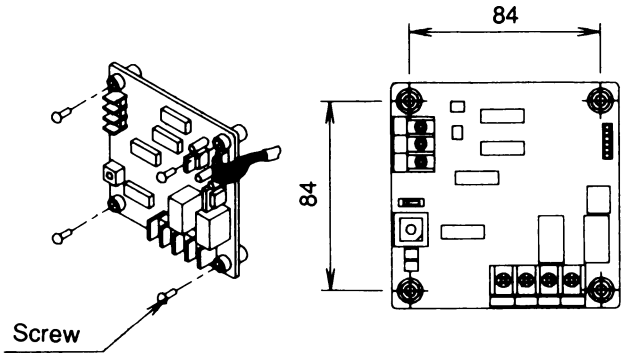

Note

1. Do not damage the PCB with your screwdriver, etc.
2. Install the adaptor inside an electric panel box to protect from electromagnetic waves and dust.

34.1.4 Electric wiring work and initial setting

1. First, wire between the indoor and outdoor units, and between each unit and the power supply. Then, wire between the indoor unit and remote controller. Finally, check operation is normal.
   For details, refer to the installation manuals for the indoor and outdoor units.

2. Next, wire between the indoor unit and the central remote controller. Then, wire the central remote controller to the power supply and make the necessary settings. Finally, check operation is normal.
   For details, refer to the installation manuals for the central remote controller.

3. Wire between the unification adaptor for computerized control and the central remote controller.
   Refer to "Wiring to the Central Remote Contorller" on the next page.

4. Set the CHANGEOVER SWITCH and CONTROL MODE SWITCH. And, wire to BMS or other external input device.
   Refer to "Wiring to External Input Devices" on P.510.

C: 2PA53489

<Wiring to the Central Remote Controller>

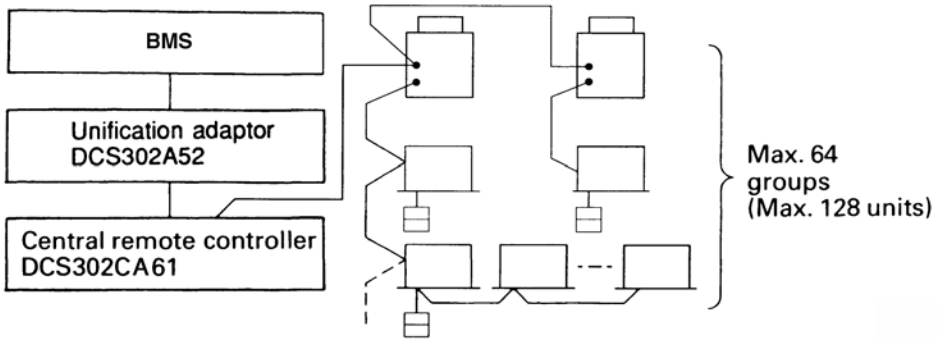

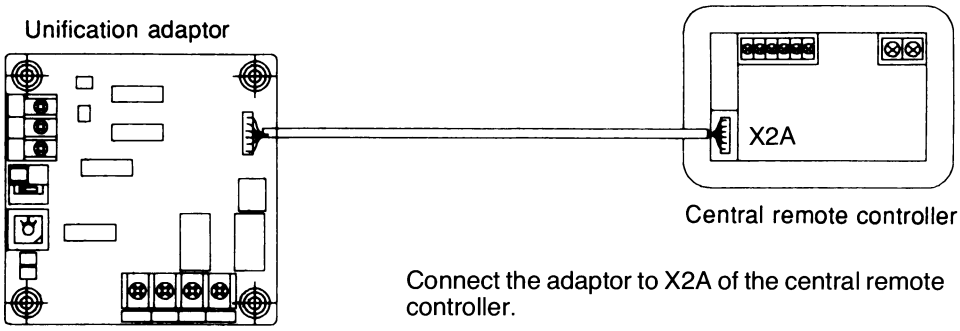

Connect the adaptor to X2A of the central remote controller.

C: 2PA53489

<Wiring to External Input Devices>

(Wire specifications)

0.75-1.25 mm^2 gauge sheathed vinyl cord or cable (2-wire)

Max. length: 150 m

5. Set the CHANGE OVER SWITCH (SS1) and CONTROL MODE SWITCH (RS1). And, wire to BMS or other external input device.
   Refer to "WIRING TO EXTERNAL INPUT DEVICES".

   1. **Control input (Unified operation/stop) (SS1)**
      Wire as explained here following, depending on whether input carries a voltage (VOLT.) or not (NON VOLT.).
      ① Input with voltage

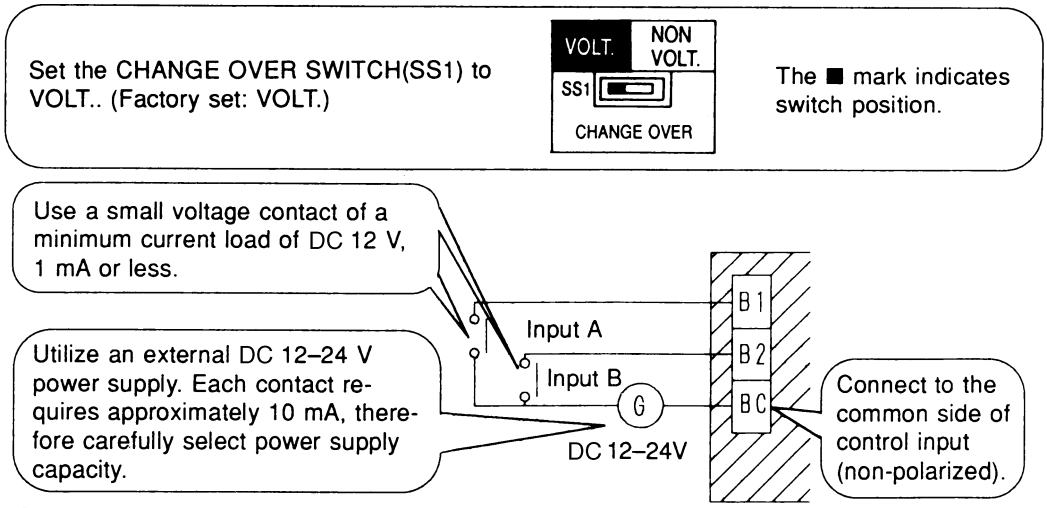

      ② Input with non voltage

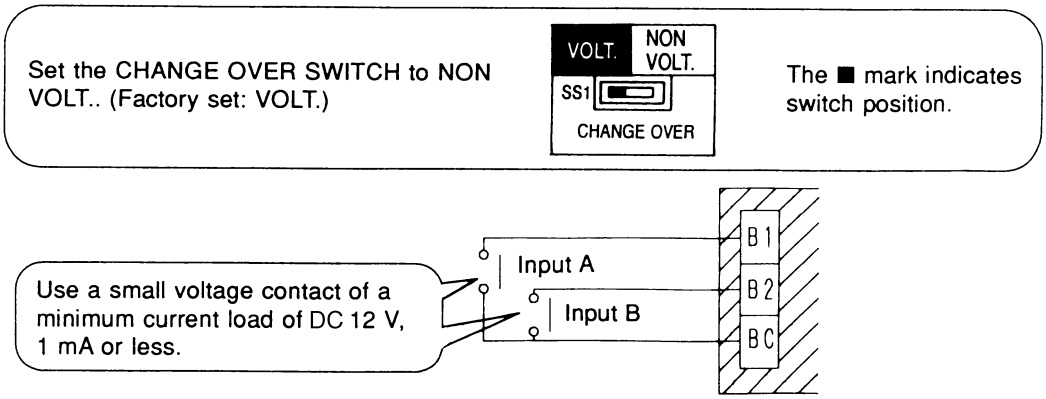

   2. **CONTROL MODE SWITCH (RS1) setting**

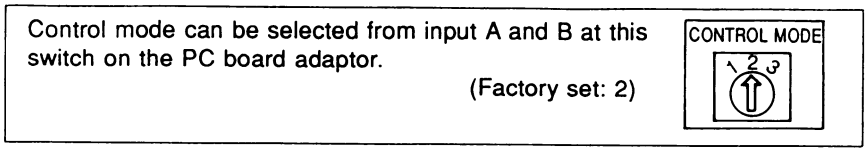

      ① For normal operation by input A

Position	Input A
2	OFF → ON: Unified operation
	ON → OFF: Unified stop

      ★ Input B can be disregarded.

      ② For instantaneous operation by input A and B
      (Use an instantaneous input of 400 msec or more at ON time.)

Position	Input A	Input B
3	ON: Unified operation	ON: Unified stop

      ③ Do not set the switch to position 1. This switch can be set at any time.

C: 2PA53489

3. Fetching the display signal

Terminals W1 – W4 are non voltage contacts used in normal operation to output operation display (W1 and W2) and malfunction display (W3 and W4) signals.

(The allowable current per contact is 10 mA – 3 A.)

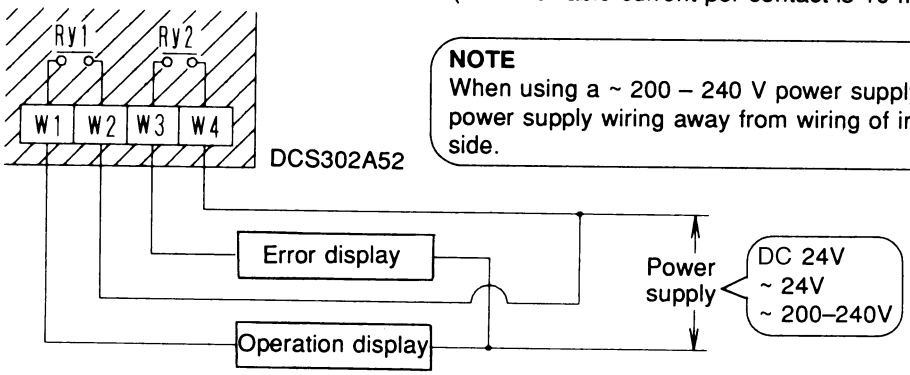

NOTE
When using a ~ 200 – 240 V power supply, keep power supply wiring away from wiring of input side.

Output conditions are indicated as below.

When Ry1 and Ry2 are OFF	When only Ry1 is ON	When only Ry2 is ON
All indoor units are stopped.	No error has occurred with the indoor units, and at least 1 unit is operating.	At least 1 unit has stopped operating due to malfunction, or a communications error has occurred between tbe central remote controller and the indoor unit.

C: 2PA53489

Part 3
Indoor Units

1. FXFQ-S — Ceiling Mounted Cassette (Round Flow with Sensing) Type 516
   1.1 BYCQ125B-W1 — Decoration Panel 516
   1.2 KDBHQ55B140 — Sealing Member of Air Discharge Outlet 522
   1.3 KDDQ55B140 — Fresh Air Intake Kit (without Dust Fan) 524
2. FXF(Q) — Ceiling Mounted Cassette (Round/Multi Flow) Type 526
   2.1 BYCP125K-W1 — Decoration Panel.....526
   2.2 BYCP125D-W1 — Decoration Panel 530
   2.3 KDBH55K160F — Sealing Member of Air Discharge Outlet 534
   2.4 KDBH55D160W — Sealing Material of Air Discharge Outlet 538
   2.5 KDBP55H160FA / WA — Panel Spacer.....541
   2.6 KDDP55B160(K) — Fresh Air Intake Kit (Chamber Type) 544
   2.7 KDD55DA160(K) — Fresh Air Intake Kit (Chamber Type).....549
   2.8 KDDP55X160 — Fresh Air Intake Kit (Direct Installation Type) 553
   2.9 KDDJ55XA160 — Fresh Air Intake Kit (Direct Installation Type) 556
   2.10 KKSJ55KA160 — Chamber Connection Kit.....559
   2.11 KDTP55K80 / 160 — Insulation Kit for High Humidity.....560
   2.12 KDT-55DA80 / 160 — Insulation Kit for High Humidity 562
   2.13 KAFP556B80 / 160, KAFP557B80 / 160 — High Efficiency Filter Unit 564
   2.14 KAF556DA80 / 160, KAF557DA80 / 160 — High Efficiency Filter (Including Chamber).....567
   2.15 KAFP552B80 / 160, KAFP553B80 / 160 — Replacement High Efficiency Filter.....570
   2.16 KDDFP55B160 — High Efficiency Filter Chamber.....571
   2.17 KDDF55DA160 — High Efficiency Filter Chamber.....574
   2.18 KAFP551K160 — Replacement Long-life Filter 577
   2.19 KAF551CA160 — Replacement Long-life Filter.....578
   2.20 KAFP55B160 — Ultra Long-life Filter Unit (Including Chamber).....579
   2.21 KAF55DA160 — Ultra Long-life Filter Unit (Including Chamber).....582
   2.22 KAFP55H160H — Replacement Ultra Long-life Filter.....585
   2.23 KAF55KA160H — Replacement Ultra Long-life Filter.....586
   2.24 KDJP55B80 / KDJP55B160 — Branch Duct Chamber 587
   2.25 KDP55DA80 / KDP55DA160 — Branch Duct Chamber.....590
3. FXZQ — Ceiling Mounted Cassette (Compact Multi Flow) Type.....593
   3.1 BYFQ60B8W1 — Decoration Panel.....593
   3.2 KDBH44BA60 — Sealing Material of Air Discharge Outlet 596
   3.3 KDBQ44BA60A — Panel Spacer.....599
   3.4 KDDQ44XA60 — Fresh Air Intake Kit (Direct Installation Type) 602
   3.5 KAFQ441BA60 — Replacement Long-life Filter 604
4. FXUQ-A — 4-Way Flow Ceiling Suspended Type.....605
   4.1 KDBTP49B140 — Decoration Panel for Air Discharge 605
   4.2 KDBHP49B140 — Sealing Member of Air Discharge Outlet.....606
5. FXC (Q) — Ceiling Mounted Cassette (Double Flow) Type.....608
   5.1 BYBC32 / 50 / 63 / 125G- W1 — Decoration Panel 608

5.2 KAFJ532G36 / 56 / 80 / 160, KAFJ533G36 / 56 / 80 / 160
— High-Efficiency Filter 611
5.3 KDDFJ53G36 / 56 / 80 / 160
— Filter Chamber for Bottom Suction.....614
5.4 KAFJ531G36 / 56 / 80 / 160 — Long-Life Replacement Filter 615
6. FXK (Q) — Ceiling Mounted Cassette Corner Type 616
6.1 BYK45 / 71FJW1 — Decoration Panel.....616
6.2 KPBJ52F56 / 80W — Panel Spacer.....620
6.3 KAFJ521F56 / 80 — Replacement Long-life Filter.....625
6.4 KDBJ52F56 / 80W — Air Discharge Blind Panel 626
6.5 K-HV7 / 9AW — Discharge Grille 633
6.6 KFDJ52FA56 / 80 — Flexible Duct with Shutter.....634
7. FXD(Q) — Slim Ceiling Mounted Duct Type.....642
7.1 KDT25N32 / 50 / 63 — Insulation Kit for High Humidity.....642
8. FXYD — Ceiling Mounted Low Silhouette Duct Type 643
8.1 KDGF19A45 / 71 — Decoration Panel 643
9. FXS(YQ) / FXYB — Ceiling Mounted Built-in Type.....644
9.1 BYBS32 / 45 / 71 / 125DJW1 — Decoration panel 644
9.2 KTBJ25K36W, KTB25KA56 / 80 / 160W
— Service Access Panel 648
9.3 KNM25K32 / 50 / 63 / 125V1
— Natural Evaporating Pan Type Humidifier.....651
9.4 KEA25K32 / 50 / 63 / 100 / 125VE — Auxiliary Electric Heater 662
9.5 KAFJ252L36, KAFJ253L36
KAF252LA56 / 80 / 160, KAF253LA56 / 80 / 160
— High-Efficiency Filter 667
9.6 KAJ25L36D, KAJ25LA56 / 80 / 160D
— Filter Chamber for Bottom Suction.....668
9.7 KAJ25L36B, KAJ25LA56 / 80 / 160B
— Filter Chamber for Rear Suction 669
9.8 KAFJ251K36 / 56 / 80 / 160 — Replacement Long-Life Filter.....673
9.9 KSA-25K36, KSA-25KA56 / 80 / 160
— Canvas Duct (Air Suction Canvas) 674
9.10 KBBJ25K36, KBBJ25KA56 / 80 / 160 — Screening Door.....675
9.11 KDJ2507K36 / 56 / 80 / 160 — Air Suction Flange 676
9.12 KDAJ25K36 / 56 / 71 / 140A — Air Discharge Adaptor.....677
10. FXM(Q) — Ceiling Mounted Duct Type,
Outdoor Air-Processing Unit 679
10.1 KAF372AA36 / 56 / 80 / 160, KAF373AA36 / 56 / 80 / 160
— High Efficiency Filter 679
10.2 KAFP372A80 / 160, KAFJ372L140 / 280,
KAFP373A80 / 160, KAFJ373L140 / 280
— High-Efficiency Filter 680
10.3 KDDF37AA36 / 56 / 80 / 160 — High Efficiency Filter Chamber.....682
10.4 KDDFP37A80 / 160 — Filter Chamber.....685
10.5 KDJ3705L140 / 280 — Filter Chamber 688
10.6 KAF371AA36 / 56 / 80 / 160 — Long-life Filter 690
10.7 KAFP371A80 / 160, KAFJ371L140 / 280
— Long-Life Replacement Filter.....691
10.8 KAF375AA36 / 56 / 80 / 160 — Long-Life Filter Chamber Kit 692
10.9 KDU30L250VE — Drain Pump Kit 695
10.10 KDU-30L125VE — Drain Pump Kit 698

11. FXH(Q) — Ceiling Mounted Suspended Type 703
11.1 KAF501DA56 / 80 / 112 — Replacement Long-life Filter 703
11.2 KDU50N60VE / KDU50N125VE — Drain-up Kit 704
11.3 KDU50B50 / 71 / 125VE — Drain Pump Kit 709
11.4 KHFP5MA63 / 160 — L-type Piping Kit (for Upward Direction).....710
11.5 KHFJ5F50 / 80 / 160 — L-Type Piping Kit (for Upward Direction) 711
12. FXA (Q) — Wall Mounted Type 712
12.1 K-KDU572EVE (Supplying goods to order) — Drain Pump Kit 712
13. FXL (Q) / FXN (Q) — Floor Standing Type / Concealed Floor Standing Type.....722
13.1 KAFJ361K28 / 45 / 71 — Long-Life Replacement Filter.....722
14. FXVQ — Floor Standing Duct Type 723
14.1 KAFJ261L140 · 224 · 280 / KAFJ261M450 · 560 — Replacement Long-life Filter 723
14.2 KAFSJ9A400 · 560 — Ultra Long-life Filter Unit.....723
14.3 KDDF-92A140~560 / KDDF-93A140~560 — High Efficiency Filter Chamber 724
14.4 KD-9A140~560 — Front Suction Base Flange.....724
14.5 KDGF-9A140~560 — Suction Grille 725
14.6 KAF-91A140~560 — Long-life Filter 725
14.7 KAF-92A140~560 / KAF-93A140~560 — High Efficiency Filter.....726
14.8 KPC(J) — Plenum Chamber 726
14.9 KPP5-10JA — Pulley for Plenum Chamber 727
14.10 KD106D10 / KDFJ906A560 — Fresh Air Intake Kit 727
14.11 KDFJ905A140 · 200 · 280 · 400 · 560 — Rear Suction Kit.....728
14.12 KD101A10 · 20 — Discharge Grille for Plenum Side 728
14.13 KWF1G5P · 8P / KKWJ9A140 · 400 / KWF1G15 — Wood Base.....729
14.14 K-ABSG1406A-1410A — Vibration Isolating Frame 729

1. FXFQ-S — Ceiling Mounted Cassette (Round Flow with Sensing) Type

1.1 BYCQ125B-W1 — Decoration Panel

DAIKIN

BYCQ125B-W1	Decoration Panel	Installation manual

CONTENTS

1. BEFORE INSTALLATION 1
2. SELECTION OF INSTALLATION LOCATION 1
3. PREPARATION OF DECORATION PANEL 2
4. INSTALLATION OF THE DECORATION PANEL 3
5. INSTALLATION OF SUCTION GRILLE 5
6. INSTALLATION OF DECORATION COVER 6

1. BEFORE INSTALLATION

(1) NOTE TO INSTALLER

- Have the customer actually operate the air conditioner while looking at the operation manuals attached to the indoor unit and remote controller. Instruct the customer how to operate the air conditioner (particularly cleaning of the air filters, operation procedures, and temperature adjustment).

(2) PRECAUTIONS

- Refer also to the installation manual attached to the indoor unit.

(3) ACCESSORIES

- Installation manual.

2. SELECTION OF INSTALLATION LOCATION

《The air discharge direction can be selected. Optional sealing material of air discharge outlet is required for 4-way flow (corner part is sealed) or 3-way flow.》
If there are exhaust fans, lightings, or machines near the indoor unit that may interfere with airflow, the ceiling may get dirty. So installation should follow the diagram below.

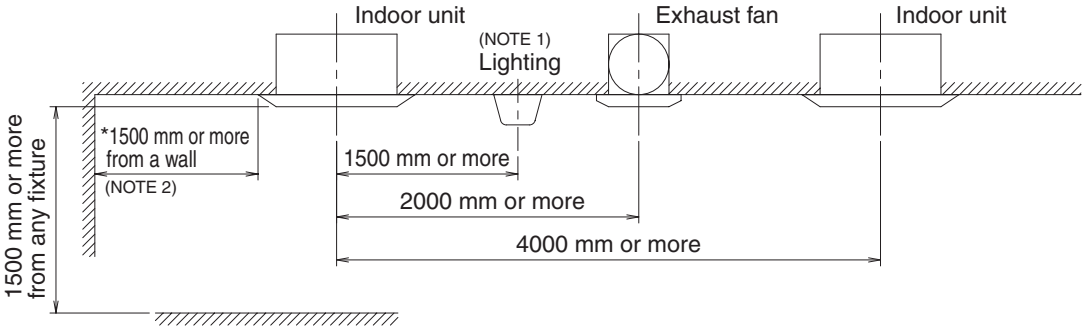

NOTE

1. This restriction applies to the exposed type lighting, but does not apply to the recessed type (which does not protrude below the ceiling line).
2. The clearance from the wall (indicated with *) must be 500 mm or more if the air outlet is closed or the horizontal blade is set to Airflow block and, if the corners (left and right corners of the target air outlet) are also closed, 200 mm or more.
   For how to set the airflow direction (including Airflow block) with the horizontal blade, refer to “Individual Airflow Direction” in the operation manual attached to the remote controller.

3. PREPARATION OF DECORATION PANEL

HANDLING OF DECORATION PANEL

- **Never place the panel facing down the design surface, nor lean the panel against a somewhere, nor leave it on a protruding object. Otherwise, the surface of the panel will be damaged.**
- **Never touch or apply force on the Horizontal blade. (The horizontal blade may malfunction)**
- **Be careful not to get 4 tabs of the removed corner section decoration cover damaged.**

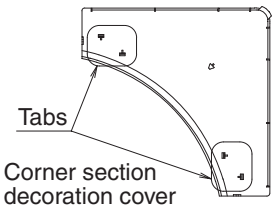

(1) Remove the suction grille from the decoration panel.

1 Press the two knobs on the suction grille and lift the knob side. **(Refer to Fig. 1)**

2 Detach the suction grille from the decoration panel by lifting the grille up approximately 45 degrees. **(Refer to Fig. 2)**

3 Remove the transporting cardboard (in 4 locations). **(Refer to Fig. 3)**

4 Remove the transporting tape (in 4 locations) on the back of the suction grille. **(Refer to Fig. 4)**

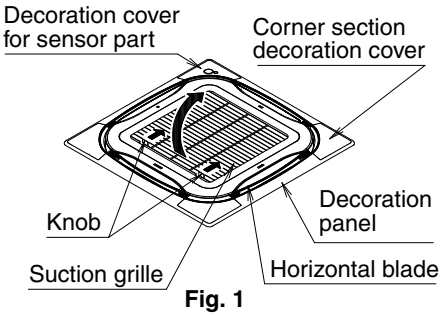

Fig. 1

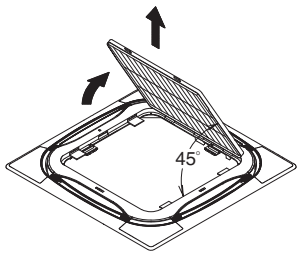

Fig. 2

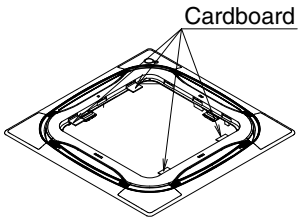

Fig. 3

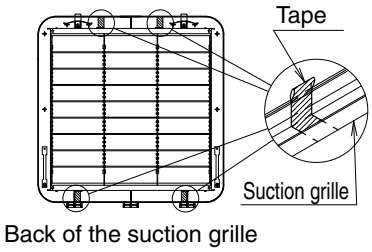

Fig. 4

(2) Remove the corner section decoration cover.

- Lift the four corner decoration covers in the direction of the arrow and remove. **(Refer to Fig. 5)**

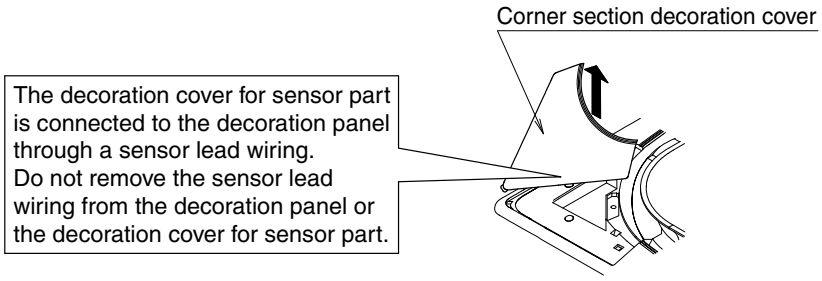

Fig. 5

4. INSTALLATION OF THE DECORATION PANEL

⟨⟨**Refer to the installation manual attached to the indoor unit for the installation of the indoor unit.**⟩⟩

(1) Match the "PIPING SIDE" and "DRAIN SIDE" displays on the decoration panel with the position of the piping section and drain section on the indoor unit.

(2) Install the decoration panel

1 Temporarily install the decoration panel to the indoor unit by hanging the temporary latch of the decoration panel to the hook of the indoor unit. (2 locations)

2 Hook the four mounting brackets on the corner sections of the decoration panel onto the hooks around the indoor unit (4 locations).
(Make sure at this time that the horizontal blade motor lead wiring and the sensor lead wiring do not get caught between the decoration panel and the indoor unit.)

3 Screw all 4 hexagon head screws located beneath the mounting brackets in approximately 5 mm. (Panel will rise)

4 Adjust the decoration panel by turning it to the arrowed direction in **Fig. 6** so that the ceiling opening is completely covered.

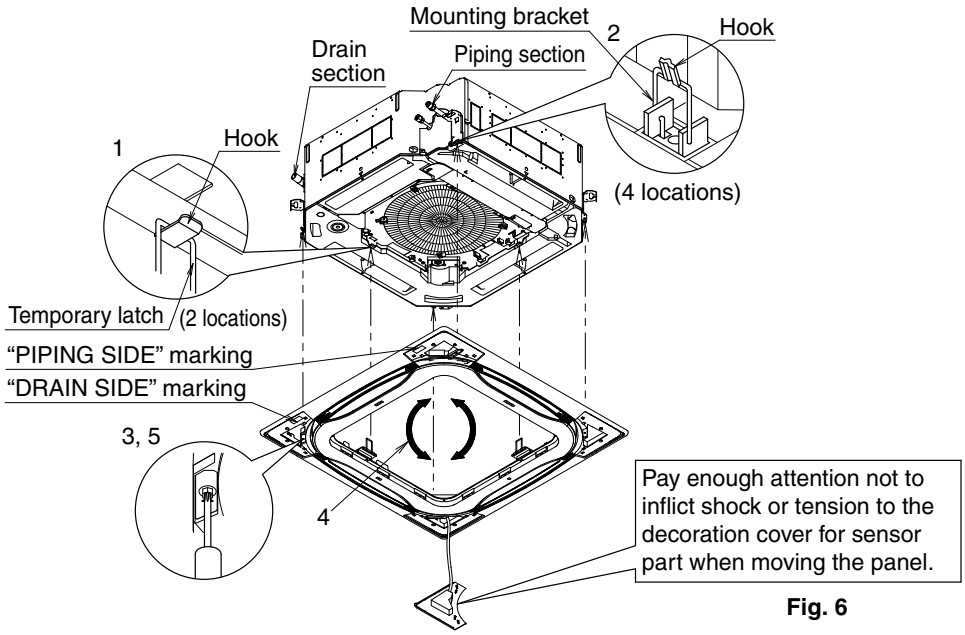

Fig. 6

5 Tighten the screws until the thickness of the sealing material between the decoration panel and the indoor unit reduces to 5-8 mm.

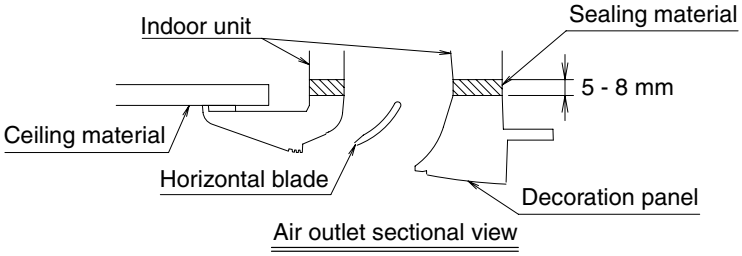

[PRECAUTIONS]

- Make sure there will be no clearance between the indoor unit and decoration panel and between the ceiling and decoration panel.

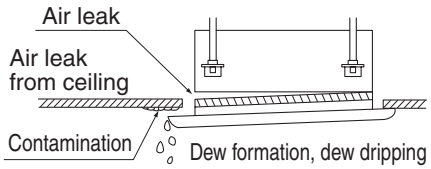

Fig. 7

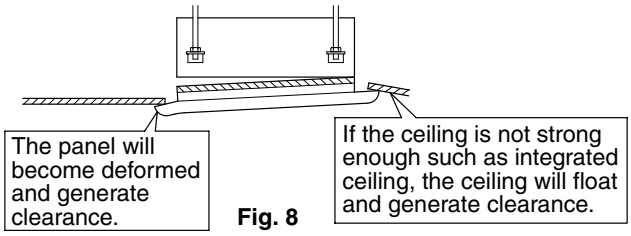

Fig. 8

If there is clearance, it may cause failure such as **Fig. 7**.

- If the screws are not screwed in tightly enough, firmly tighten the screws described in the previous page so that there are no clearance. If there are still clearances between the ceiling surface and the decoration panel even after tightened the screws, readjust the height of the indoor unit.
- Readjust so that the suspended height of the indoor unit drops toward the ceiling surface.

If the position of the hung indoor unit is too high, it may generate clearance as **Fig. 8**.

- Loosen the screws and readjust the strength of tightening.
- If the integrated ceiling is not strong enough and there are still clearances after the adjustments described above, reinforce the area around the opening so that it is strong enough.

NOTE

- Adjustment of the indoor unit height from the holes in the corner of the decoration panel is possible if the indoor unit is kept leveled and the drain piping, etc. is unaffected.

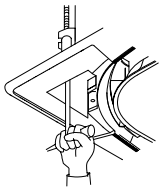

(3) Wiring of the decoration panel **(Refer to Fig. 9)**

CAUTION

Before wiring, be sure to turn off all power supply switches.

<When installing the decoration panel simultaneously with the indoor unit wiring.>

6 Remove the control box lid of the indoor unit.

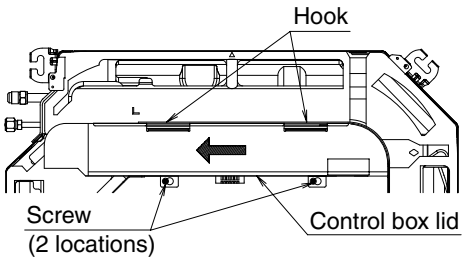

Loosen the two screws, slide the cover in the direction of the arrows, and disengage from the hooks.

7 Find connectors for the horizontal blade motor lead wiring and sensor lead wiring which are came out from the decoration panel, then connect them certainly to the printed circuit board in the control box of the indoor unit. (Depends on the indoor unit to be connected).

The sensor and the horizontal blades do not operate unless the connectors connected.

8 Secure the horizontal blade motor lead wiring and the sensor lead wiring to the indoor unit using the clamp (attached to indoor unit).

9 Attach the control box lid of the indoor unit.

Make sure that the horizontal blade motor lead wiring and the sensor lead wiring are not caught between the control box and its lid.

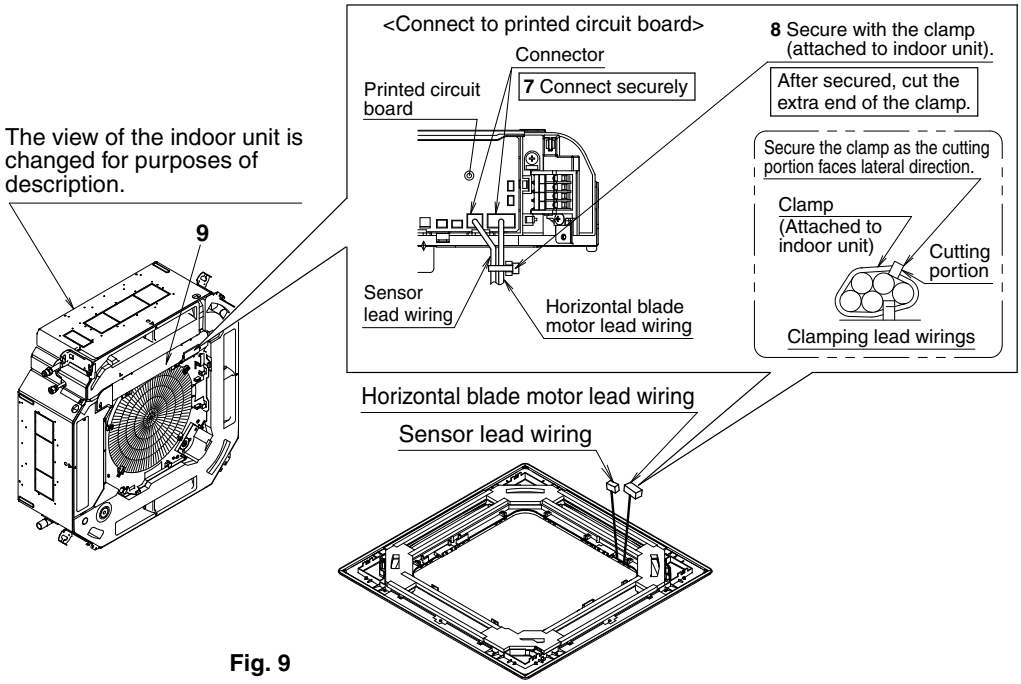

Fig. 9

<Later installation of only the decoration panel>

The decoration panel can be connected without taking the lid off the indoor unit control box by the following procedure.

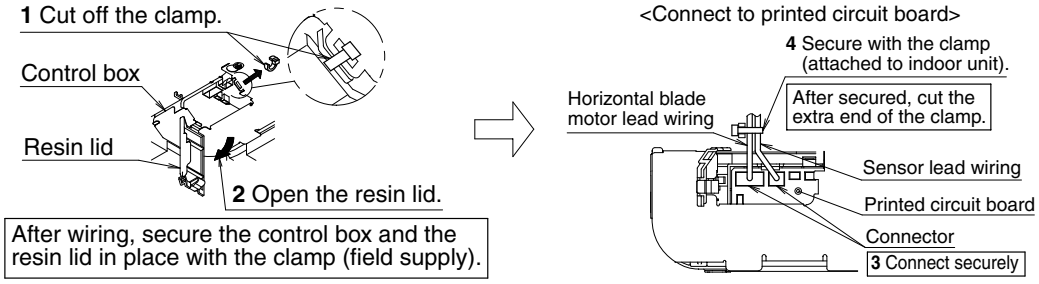

5. INSTALLATION OF SUCTION GRILLE

It is possible to install the suction grille in 4 directions by turning the suction grille.
Change the direction when adjusting the direction of the suction grilles of multiple units or in meeting customers' demands.

Attach the suction grille.

1 Hook on the suction grille into 3 hooks of the decoration panel by lifting the grille up approximately 45 degrees. **(Refer to Fig. 10)**

2 Hook the strap of the suction grille into the holding part of the decoration panel after the strap is turned around as shown in the figure below (2 locations). **(Refer to Fig. 11)**

3 Slowly lift the suction grille, and finally, securely fasten it to the main body of the decoration panel, while pressing the two knobs. **(Refer to Fig. 12)**

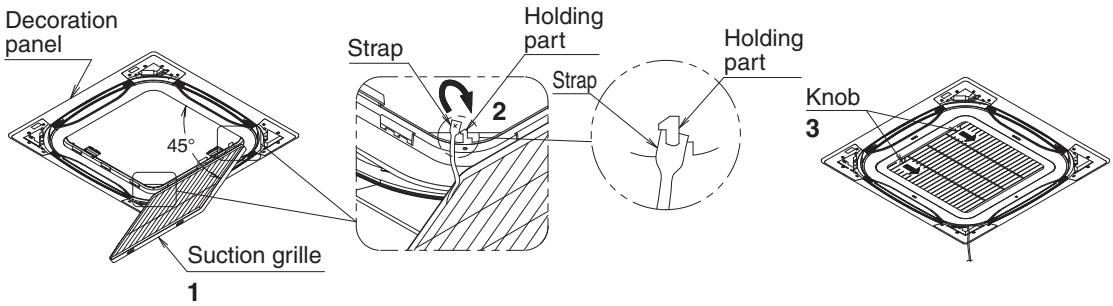

Fig. 10 **Fig. 11** **Fig. 12**

NOTE
The straps may be caught when the suction grille is closed. Before closing the suction grille, ensure that the straps are not getting out from the side of the suction grille.

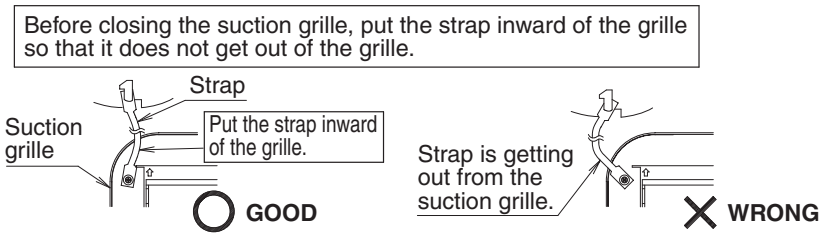

6. INSTALLATION OF DECORATION COVER

Attach the corner section decoration covers.

1 Attach the strap of the corner section decoration cover to the pin of the decoration panel. **(Refer to Fig. 13)**

2 Install the corner section decoration cover over the decoration panel. **(Refer to Fig. 14)**

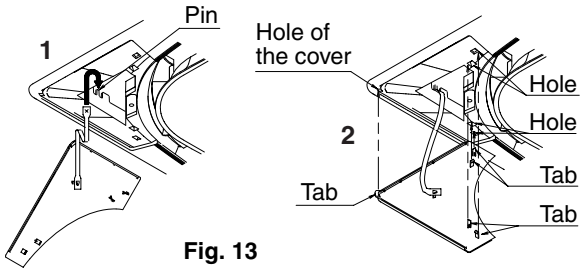

Firstly insert the tab into the hole of the corner then insert the rest tabs into each hole (4 locations).

Fig. 13 **Fig. 14**

3 Attach the decoration cover for sensor part to the decoration panel.
Then, store the sensor lead wiring inside of the ceiling through the opening.

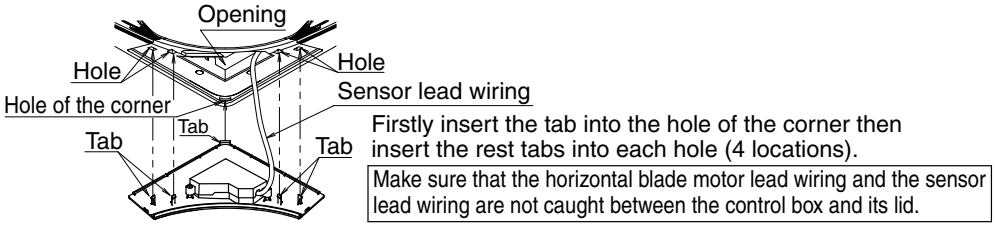

1.2 KDBHQ55B140 — Sealing Member of Air Discharge Outlet

Daikin AIR CONDITIONER SEALING MEMBER OF AIR DISCHARGE OUTLET Installation manual 1P278078-1

KDBHQ55B140

READ THESE INSTRUCTIONS CAREFULLY BEFORE INSTALLATION.
KEEP THIS MANUAL IN A HANDY PLACE FOR FUTURE REFERENCE.

Caution

- Refer to the installation manual for both indoor unit and the decoration panel.
- If a separately provided sealing material kit is installed, the 3-way flow may not be selectable. For details, please refer to the technical materials or catalogues.

Contents of Kit Prior to installation make sure you have the complete parts.

Name	Sealing material (Longitudial air outlet)	Sealing material A, B (Air outlet at the corner)	Sealing material C (Air outlet at the corner)	Sealing material D (Air outlet at the corner)	Tape for fixing the sealing (Longitudial air outlet)	Tape for fixing the sealing (Air outlet at the corner)	Tape for fixing the sealing (Air outlet at the corner)
Quantity	1 pc.	2 pcs.	1 pc.	1 pc.	1 pc.	3 pcs.	1 pc.
Shape · marking	1	2	3	4	5	6	7

Name	Installation manual
Quantity	1 pc.(This manual)
Shape · marking	8

1 The direction of air discharge and the positioning of sealing material

(1) Selection of the air outlet
- Select the direction of air discharge from the following table according to the location of the indoor unit.
  Refer to 2 On-site setting for setting position number.
  Refer to the installation manual attached to the indoor unit for selection of installation location.

Caution Discharge direction patterns other than those shown in the figure below cannot be selected. (Dew condensation may occur.)

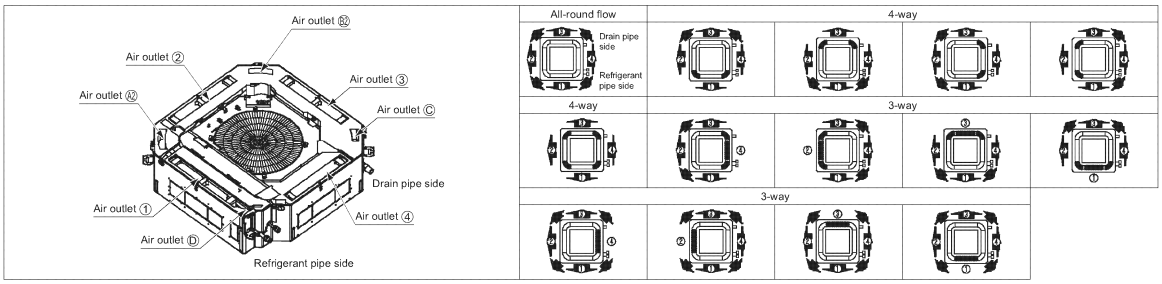

(2) Prepare the sealing material and the tape for fixing the sealing material according to the air outlet ① to ④ to be closed.
- Cut off the sealing material and sealing material fixing tape on the tear line (dotted line). Cut off the sealing material fixing tape using scissors.
- Adhere the sealing material to the sealing material fixing tape.
  (Adhere the sealing material to the center of the sealing material fixing tape unless otherwise instructed.)

Caution
Make sure the printed number remains visible while attaching the sealing material to the sealing material fixing tape, so that the sealing material can be identified.

Caution
Do not cut on the tear line for the long air outlet sealing material 1 and sealing material fixing tape 5 as shown below. If the tear line is cut off, it may cause condensation.

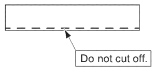

<Installation using sealing material>

i) Closing air outlet ①

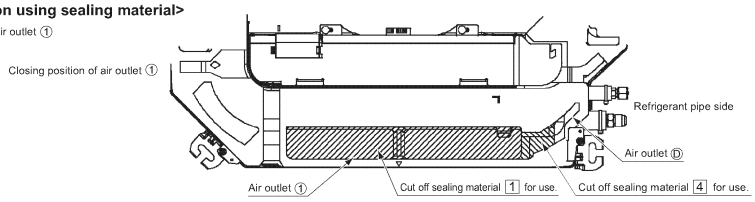

* To close the air outlet ①, the sealing material D 4 will be used. Be careful not to throw away the sealing material.

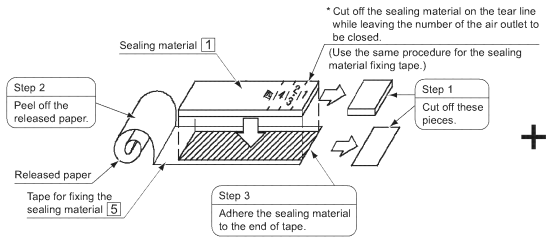

+

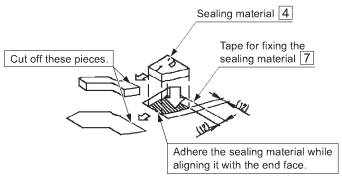

* To close the air outlet Ⓓ as well, the sealing material D 4 and sealing material fixing tape 7 are not required to be cut off.

ii) Closing air outlet ②, ③, ④

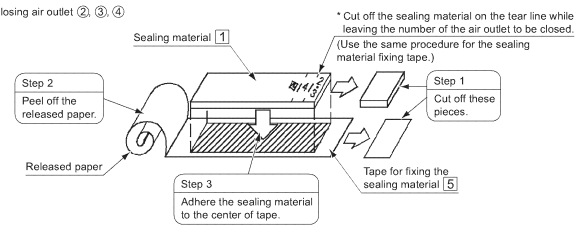

1P278078

(3) Adhere the sealing material created in step (2) to the air outlet of the indoor unit.

i) Closing air outlet ①

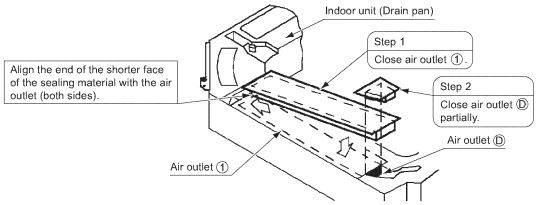

ii) Closing air outlet ②, ③, ④

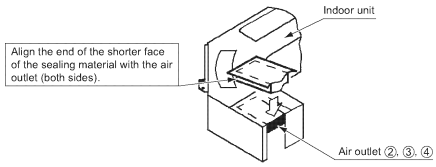

Caution

Adhere the sealing material without creating a clearance and detachment between the sealing material and air outlet. Air discharge and dew condensation may occur.

(4) Adhere the sealing material to the sealing material fixing tape for the corner air outlets Ⓐ to Ⓓ to close them.
(Adhere the sealing materials to the positions shown in the figures.)

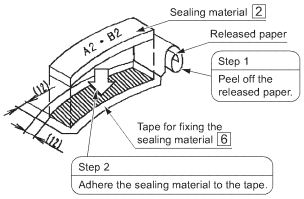

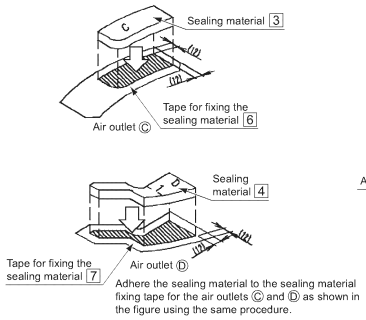

(5) Adhere the sealing material created in step (2) to the air outlet of the indoor unit.

i) Closing air outlet ①, ②, Ⓒ

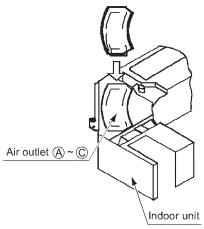

ii) Closing air outlet Ⓓ

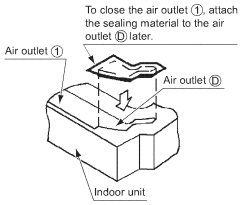

Caution

- Make sure the printed number remains visible while attaching the sealing material to the sealing material fixing tape, so that the sealing material can be identified.
- To close both air outlet ① and air outlet Ⓓ, attach the sealing material to the air outlet ① first.

2 On-site setting

- **Perform on-site setting using the remote controller after power is supplied in accordance with the manual provided with the remote controller depending on the installation conditions.**
- The 3 different kinds of setting such as "Mode number", "First code number" and "Second code number" must be made by the remote controller.
- The setting and operation procedures are written in the manual provided with the remote controller.
- Do not perform settings that are not listed in the table.

(a) Setting according to number of air outlet used

Switch the "Second code number" shown in the table below depending on the number of air outlet used.
When the corner air outlets are closed for the 4-way flow, set the air flow direction to "downward".
Note: If the installation position is higher than the standard ceiling height, "(b) Setting according to height of ceiling" is necessary.

(Setting according to number of air outlet used)

Setting	Mode number (Note)	First code number	Second code number
All-round flow · 4-way	13 (23)	1	01
3-way flow			02

(Setting when the corner air outlets are closed for 4-way flow)

Setting	Mode number (Note)	First code number	Second code number
Standard air flow direction	13 (23)	4	02
Downward air flow direction			03

Note: The "Mode number" is normally set collectively for a group. In order to set each indoor unit individually and perform checks after the settings, specify the mode number in parenthesis.

(b) Setting according to height of ceiling

For the ceiling height, refer to the ceiling height and number of air outlet used. Then switch the "Second code number" shown in the table below depending on the number of air outlets.

(Setting according to ceiling height)

Setting	Mode number (Note)	First code number	Second code number
Standard	13 (23)	0	01
High (1)			02
High (2)			03

Note: The "Mode number" is normally set collectively for a group. In order to set each indoor unit individually and perform checks after the settings, specify the mode number in parenthesis.

(Ceiling height and number of use of air outlet)

		Number of use of air outlet					
Indoor unit		71 class			100~140 classes		
		All-round flow	4-way air discharge	3-way air discharge	All-round flow	4-way air discharge	3-way air discharge
Ceiling height	Standard	2.7 m or less	3.1 m or less	3.0 m or less	3.2 m or less	3.4 m or less	3.6 m or less
	High (1)	3.0 m or less	3.4 m or less	3.3 m or less	3.6 m or less	3.9 m or less	4.0 m or less
	High (2)	3.5 m or less	4.0 m or less	3.5 m or less	4.2 m or less	4.5 m or less	4.2 m or less

Values for ceiling height are for reference.

1P278078

1.3 KDDQ55B140 — Fresh Air Intake Kit (without Dust Fan)

Daikin Air Conditioner Fresh air intake kit (without duct fan) Installation manual

KDDQ55B140

READ THESE INSTRUCTIONS CAREFULLY BEFORE INSTALLATION.
KEEP THIS MANUAL IN A HANDY PLACE FOR FUTURE REFERENCE.

⚠Caution Before starting the installation work, carefully read the following, safety precautions and observe them to ensure safety during work.

- Make sure to use the attached or specified components to install the products. Otherwise, it may cause air leak or the product may fall.
- After installation, check whether there is no abnomality during the trial operation.

Combination table

Kit name	Applicable indoor unit name and panel name	
		Model
KDDQ55B140	SPLIT	FCQG 71 · 100 · 125 · 140EVEB
	Decoration panel	BYCP125B-W1

REMARKS

- This kit can be installed on the ceiling mounted cassette type air conditioner.
- Before installation, confirm the indoor unit name with reference to the left table.
- Please refer to the installation manual for the indoor unit as well as the mounting procedure for the decoration panel during the installation.
- When mounting a duct fan, make sure to use a wiring adapter for electrical appendices (KRP1C11) and link it with the indoor unit fan.

Caution

Control the intake air flow volume of the indoor unit so it is 10% or less of fast.

- Be sure to install the attached sensor assy.

<The recommended duct for on-site connection is shown in the table below.>

Part name	Part number	
Flexible duct (Normal diameter ϕ150)	K-FDS151D (1m)	K-FDS153D (3m)
	K-FDS152D (2m)	K-FDS154D (4m)

Components Check if the following parts are included with your kit. (Shaded part is separately packed.)

Name	① Suction chamber	② Connecting chamber (Left)	③ Connecting chamber (Right)	④ Sealing material	⑤ Desiccant tape	⑥ Screw	⑦ Sensor assy	⑧ Clamp	⑨ Screw (for sensor)	⑩ Installation manual
Shape						M5 × 12				(This manual)
Quantity KDDQ55B140	1 pc.	1 pc.	1 pc.	2 pcs.	2 pcs.	4 pcs.	1 pc.	2 pcs.	1 pc.	1 pc.

1 Selection of location and access door

(1) Refer to the following figure to select the mounting position (unit: mm).

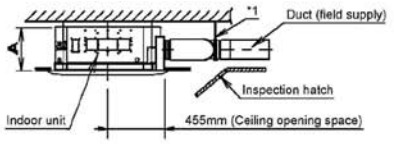

	Indoor unit	
	SPLIT	A (mm)
BYCP125B-W1	71~140 type	348

*1. Hang and fix the T-tube assy for installation.
The load of the T-tube assy may create a clearance between the indoor unit and suction chamber.
*2. Install the inspection batch (450 × 450mm or more).
Either one of the inspection batches must be installed.

(2) Install the inspection batch (unit: mm).

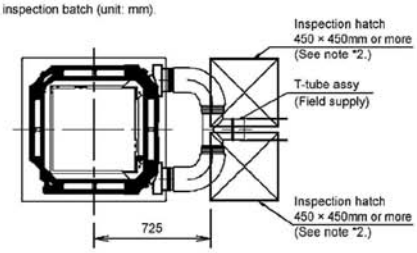

2 Installation of sensor assy and suction chamber

*When the indoor unit is already installed, perform the following operations in accordance with the precautions below.
- Make sure to turn off the power supply before starting the operation.
- Remove the decoration panel from the indoor unit. (For details, please refer to the installation manual provided with the decoration panel.)

<Installation of sensor assy>

(1) Refer to the installation manual of the indoor unit, remove the control box lid of indoor unit.
(2) Install the sensor assy and bell mouth on the indoor unit using the provided screws.
(3) Remove the connector (X16A) of the existing sensor from the printed circuit board of the indoor unit, and the connector (X4A) of the existing sensor from the printed circuit board of the adapter.
(4) Connect the wire harness of the sensor assy that was attached to the indoor unit to the connector (X16A) on the printed circuit board of the indoor unit and the connector (X4A) on the printed circuit board of the adapter as shown in the figure below.
(5) Use the provided clamps to fix the wire harness (to the other wire harness) as shown in the right figure.
(6) When all wiring operations are completed, install the control box lid in accordance with the installation manual provided with the air conditioner.

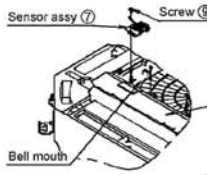

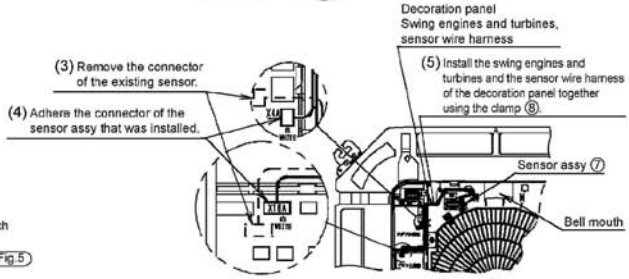

<Installation of suction chamber>

*The figure show the installation procedure for a new indoor unit.
(1) Adhere the desiccant tape ⑤ to the corner air outlet sealing material ④, and then attach them to the air outlet of the indoor unit. (2 positions) (Fig.1), (Fig.2)
(2) Install the suction chamber ① on the indoor unit using hooks (4 positions). (Fig.3) ~ (Fig.5)
Fix the hooks at the four positions with reference to (Fig.4).
*Install the indoor unit and suction chamber while aligning their contours. (Fig.4), (Fig.6)

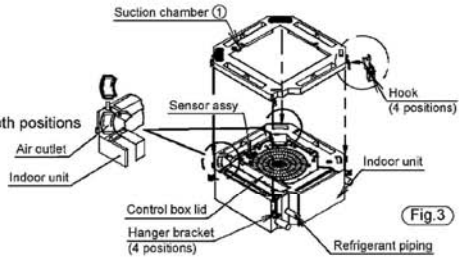

(Fig.1) Air outlet ⑫, ⑬

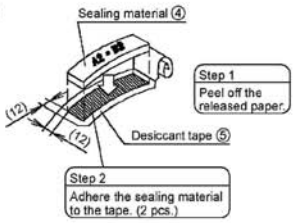

3K023084

Fig.4 Installation

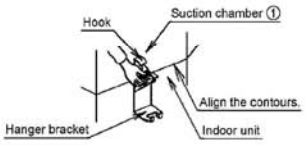

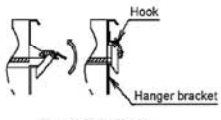

How to fix the hooks

Fig.5 After installation

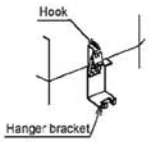

Fig.6 Installation completion figure

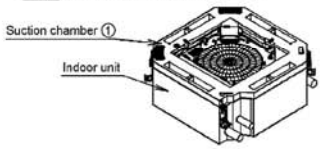

❸ Installation of indoor unit and suction chamber

- Install the indoor unit and suction chamber.
  For installation, follow the installation manual provided with the indoor unit. (Please refer to the right figure for the installation height.)
- To install the suction chamber on an existing indoor unit, change the installation height of the indoor unit to A in the right figure.

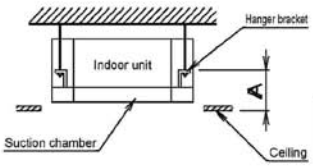

	A (mm)
BYCP125B-W1	185

❹ Installation of connecting chamber and connection of flexible duct

Install the connecting chambers. (One chamber on both sides, 2 in total) Fig.7

(1) Push up the square holes of the connecting chamber ② or ③ while fitting them onto the hook (tab) of the suction chamber ① (2 positions).

(2) Fix the connecting chamber using the screws ⑥ provided. (2 positions)

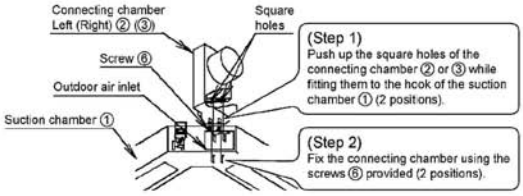

Fig.7 Installation of connecting chamber (this figure shows the left connecting chamber ② .)

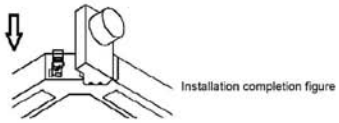

❺ Duct connection <Duct: diameter ϕ150>

(1) Connect duct to the connecting chamber.
(Insert duct to the end of the connecting chamber's tube portion.)

(2) Tie the connected portions with band and wrap with tape to prevent air leak.

(3) Insulate the duct to prevent condensate.

(4) Hang and fix the portion of a T-tube.
Otherwise, a opening is made by the dignity of a pipe between an indoor unit and suction chamber.

Do not perform the following duct work

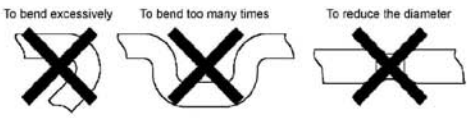

Caution

- Follow the local code or regulation to install the duct.
- In case that metal duct is penetrated through wooden wall, make sure the duct and the wall are electrically insulated.
- At the outdoor side, install the duct inclined downwardly so that the rain will not get into the duct. (Inclination 1/100~1/50)
- Where it contact the outside air, make sure to install screen to avoid birds, small animals or insects getting inside the duct.
- Where it contact the outside air, make sure to install air filter to protect heat exchanger for indoor unit.

❻ Installation of decoration panel and suction chamber

- After the decoration panel is installed temporarily, install the harness running from the decoration panel through the hole for the electric wiring of the suction chamber.
  One wire harness for the swing engines and turbines and one wire harness for the sensor (two wire harnesses in total)
- Install the decoration panel in accordance with the installation manual provided with the decoration panel. (Remove the control box lid.)

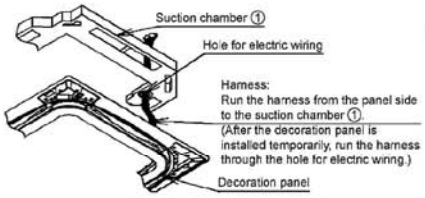

- After the wire harness is installed, install the control box lid.
  During installation, be careful the wiring is not caught.

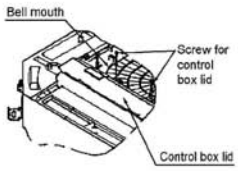

Wireless air conditioners

- For details of the connection procedure, please refer to the installation manual provided with the wireless remote controller kit (provided separately).

3K023084

2. FXF(Q) — Ceiling Mounted Cassette (Round/Multi Flow) Type

2.1 BYCP125K-W1 — Decoration Panel

DAIKIN

BYCP125K-W1	Decoration Panel	Installation manual

CONTENTS

1. BEFORE INSTALLATION 1
2. PREPARATION OF DECORATION PANEL 1
3. INSTALLATION OF THE DECORATION PANEL TO THE INDOOR UNIT BODY.....2
4. INSTALLATION OF SUCTION GRILLE AND SERVICE COVER 4

1. BEFORE INSTALLATION

1. PRECAUTIONS
- Refer also to the installation manual attached to the indoor unit.

2. ACCESSORIES
- Installation manual.

3. NOTE TO INSTALLER
- Be sure to instruct the customer how to properly operate the system showing him/her the attached operation manual.

2. PREPARATION OF DECORATION PANEL

⟨⟨For this unit, you are able to select air flow directions. To discharge air in 2 or 3 directions, it is necessary to purchase optional blocking pad kit.⟩⟩

HANDLING OF DECORATION PANELS
- Never place the panel facing down nor lean it against a wall nor leave it on a projecting object.
- Never touch or put pressure on the swing flap.
  (The swing flap may malfunction)

(1) Remove the suction grille from the decoration panel.

1 Press the lever on the suction grille and lift the lever side. **(Refer to Fig. 1)**

2 Detach the suction grille from the decoration panel by lifting the grille up approximately 45 degrees. **(Refer to Fig. 2)**

3 Remove the transporting cardboard (in 4 locations) from the main unit. **(Refer to Fig. 3)**

4 Remove the transporting tape (in 4 locations) on the back of the suction grille. **(Refer to Fig. 4)**

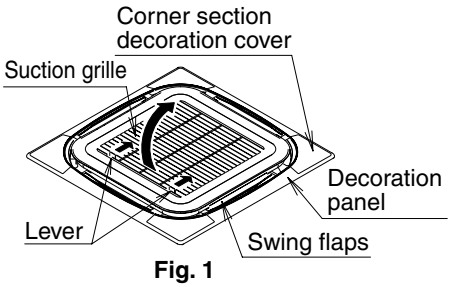

Fig. 1

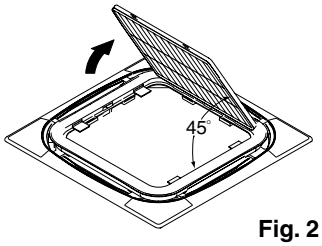

Fig. 2

3PA64319-13Q

(2) Remove the corner section decoration cover.
- Lift the four corner decoration covers in the direction of the arrow and remove. **(Refer to Fig. 5)**

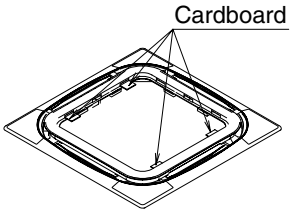

Fig. 3

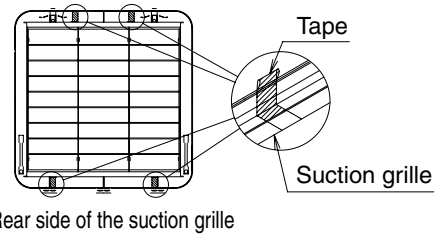

Fig. 4

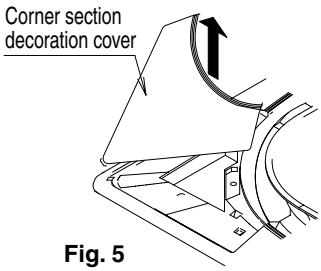

Fig. 5

3. INSTALLATION OF THE DECORATION PANEL TO THE INDOOR UNIT BODY

⟨⟨Refer to the installation manual attached to the indoor unit for the installation of the indoor unit. ⟩⟩

(1) Match the “PIPING SIDE” and “DRAIN SIDE” displays on the decoration panel with the position of the piping section and drain section on the indoor unit.

(2) Install the decoration panel

1 Temporarily install the decoration panel to the indoor unit by hanging the temporary latch of the decoration panel to the hook of the indoor unit body. (2 locations)

2 Hook the four mounting brackets on the corner sections of the decoration panels onto the hooks around the main indoor unit body.
(Make sure at this time that the swing motor lead wire does not get caught between the decoration panel and the main unit.)

3 Screw all 4 hexagon head screws located right beneath the latches in approximately 5 mm. (Panel will rise)

4 Adjust the decoration panel by turning it to the arrowed direction in Fig. 6 so that the ceiling opening is completely covered.

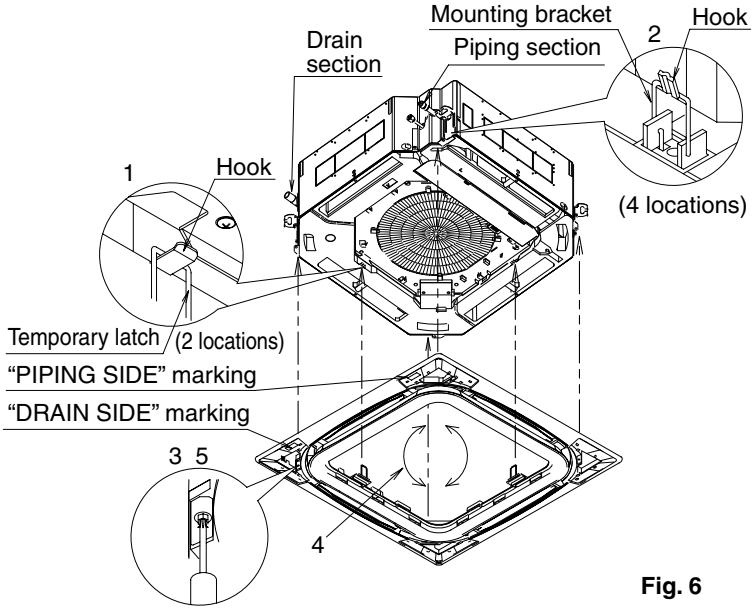

Fig. 6

5 Tighten the screws until the thickness of the sealing material between the decoration panel and the indoor unit body reduces to 5-8 mm.

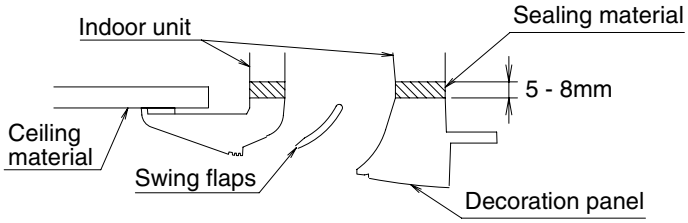

[PRECAUTIONS]

- Improper screwing of the screws may cause the troubles shown in Fig. 7 Screw properly.

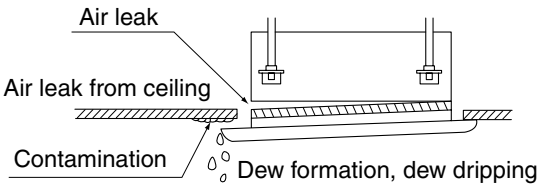

Fig. 7

- If gap is still left between the ceiling and the decoration panel after screwing the screws, readjust the indoor unit body height. **(Refer to Fig. 8)**

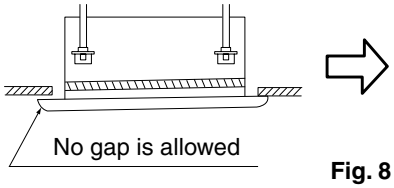

Fig. 8

Adjustment of the indoor unit body height from the holes in the corner of the decoration panel is possible if the indoor unit is kept leveled and the drain piping, etc. is unaffected.

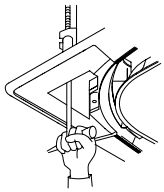

(3) Wiring of the decoration panel **(Refer to Fig. 9)**

6 Remove the electric components box lid.

7 Connect the connectors for swing flap motor lead wire installed on the decoration panel.

8 Replace the electric components box lid reversing the procedure to remove it.

Make sure that the swing flap motor lead wire is not caught between the electric components box and its lid, and between the indoor unit body and the decoration panel.

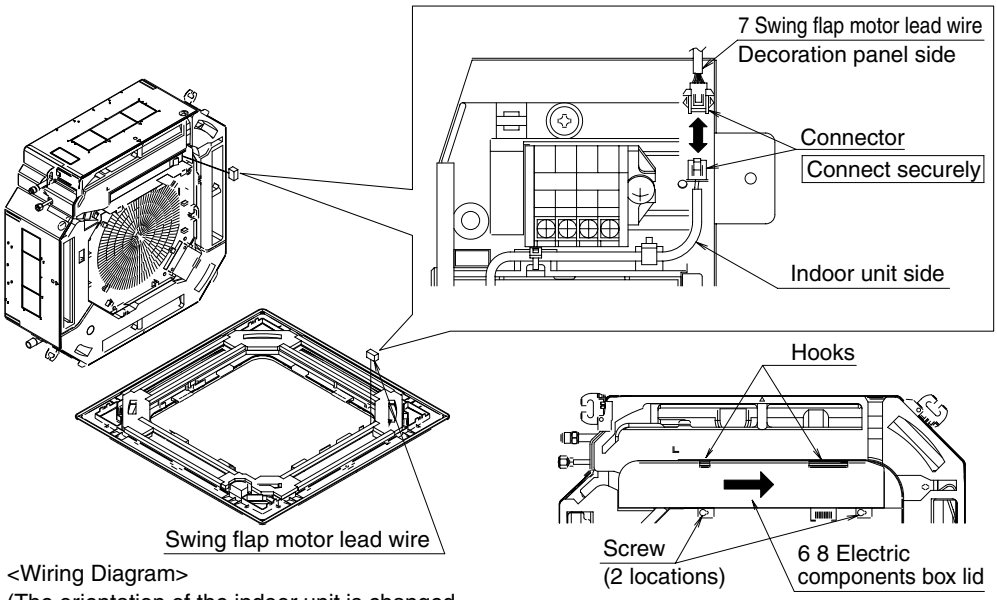

<Wiring Diagram>
(The orientation of the indoor unit is changed for purposes of description.)

Loosen the two screws, slide the cover in the direction of the arrows, and disengage from the hooks.

Fig. 9

4. INSTALLATION OF SUCTION GRILLE AND SERVICE COVER

(1) Install the suction grille
Install by reversing the procedure shown in "PREPARATION OF DECORATION PANEL".
It is possible to install the suction grille in 4 directions by turning the suction grille.
Change the direction when adjusting the direction of the suction grille of multiple units or in meeting customers' demands.

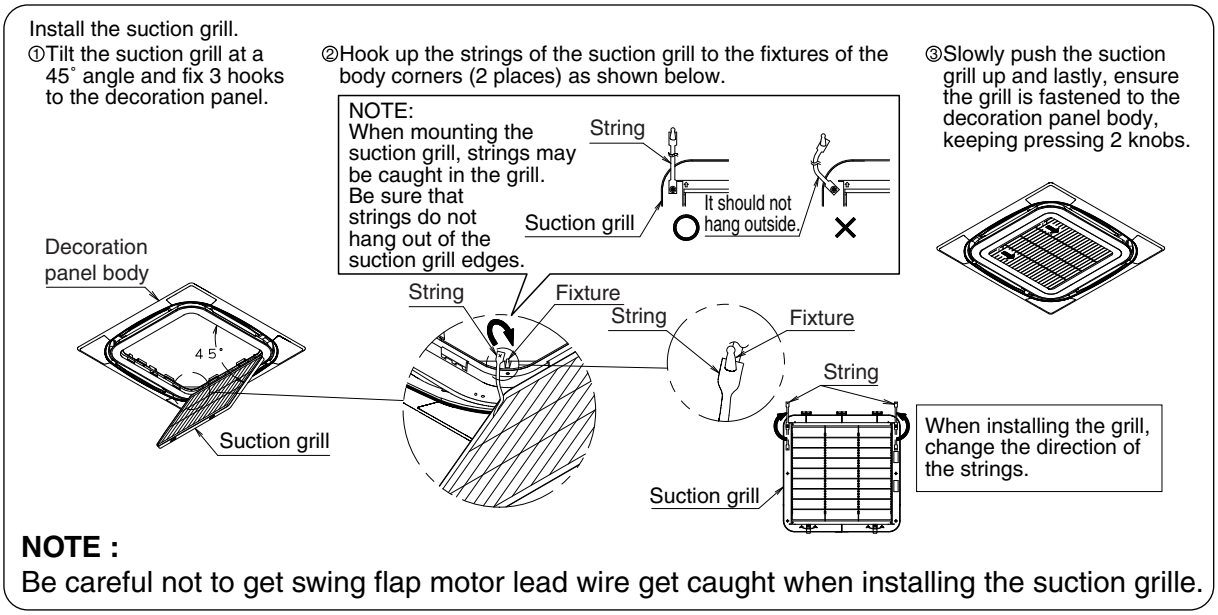

NOTE :
Be careful not to get swing flap motor lead wire get caught when installing the suction grille.

(2) Install the corner section decoration cover.

1 Attach the string of the corner section decoration cover to the pin of the decoration panel. **(Refer to Fig. 10)**

2 Install the corner section decoration cover over the decoration panel. **(Refer to Fig. 11)**

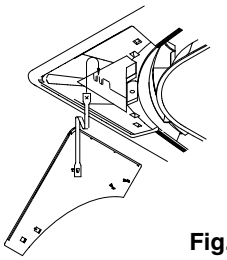

Fig. 10

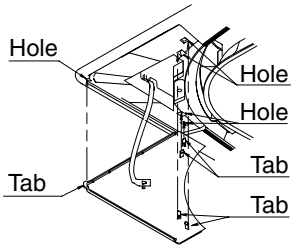

Attach by inserting the five tabs on the corner section decoration cover into the holes on the decoration panel.

Fig. 11

C: 3PA64319-13Q

2.2 BYCP125D-W1 — Decoration Panel

1. BEFORE INSTALLATION

1. PRECAUTIONS
- Refer also to the installation manual attached to the indoor unit.

2. ACCESSORIES
- Installation manual.

3. NOTE TO INSTALLER
- Be sure to instruct the customer how to properly operate the system showing him/her the attached operation manual.

2. PREPARATION OF DECORATION PANEL

⟨⟨ For this unit, you are able to select air flow directions. To discharge air in 2 or 3 directions, it is necessary to purchase optional blocking pad kit.⟩⟩

HANDLING OF DECORATION PANELS
- Never place the panel facing down nor lean it against a wall nor leave it on a projecting object.
- Never touch or put pressure on the swing flap.
  (The swing flap may malfunction)

(1) Remove the swing flap motor lead wire on the back of the decoration panel form the hook.
Push the wires outward to the frame surface and remove the wires from the hook in the middle.
(Refer to Fig. 1)

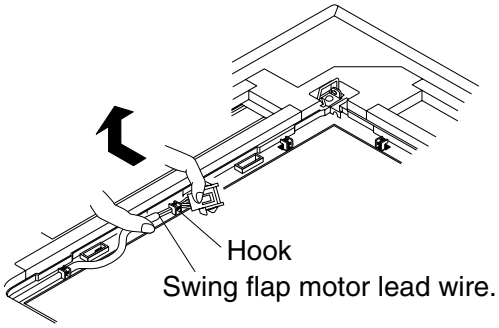

Fig. 1

(2) Remove the suction grille from the decoration panel.
1 Push the suction grille lever inward and lift up the lever side. **(Refer to Fig. 2)**
2 Detach the suction grille from the decoration panel by lifting the grille up approximately 45 degrees. **(Refer to Fig. 3)**

(3) Remove the service cover on the corner.
- Slide the service cover outward to remove. **(Refer to Fig. 4)**

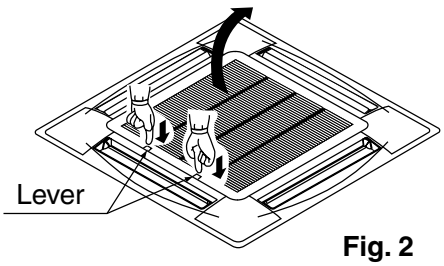

Fig. 2

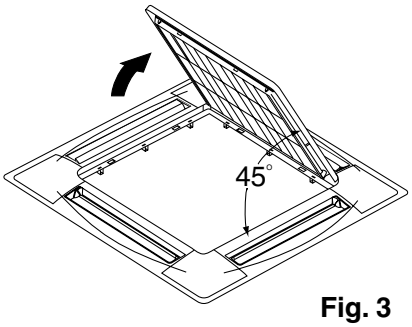

Fig. 3

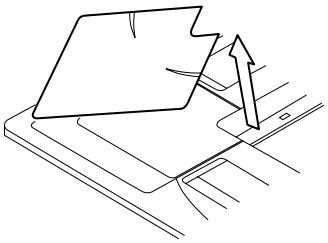

Fig. 4

C: 3PA64319-11M

3. INSTALLATION OF THE DECORATION PANEL TO THE INDOOR UNIT BODY

⟨⟨Refer to the installation manual attached to the indoor unit for the installation of the indoor unit. ⟩⟩

(1) Match the “PIPING SIDE” and “DRAIN SIDE” displays on the decoration panel with the position of the piping section and drain section on the indoor unit.

(2) Install the decoration panel

1 Temporarily install the decoration panel to the indoor unit by hanging the latch on the opposite side of the swing flap motor of the decoration panel to the hook of the indoor unit body. (2 positions)

2 Temporarily hang the remaining 2 latches to the hooks on the sides of the indoor unit.
(Be careful not to let the swing motor lead wire get caught in the sealing material.)

3 Screw all 4 hexagon head screws located right beneath the latches in approximately 5 mm.
(Panel will rise)

4 Adjust the decoration panel by turning it to the arrowed direction in Fig. 5 so that the ceiling opening is completely covered.

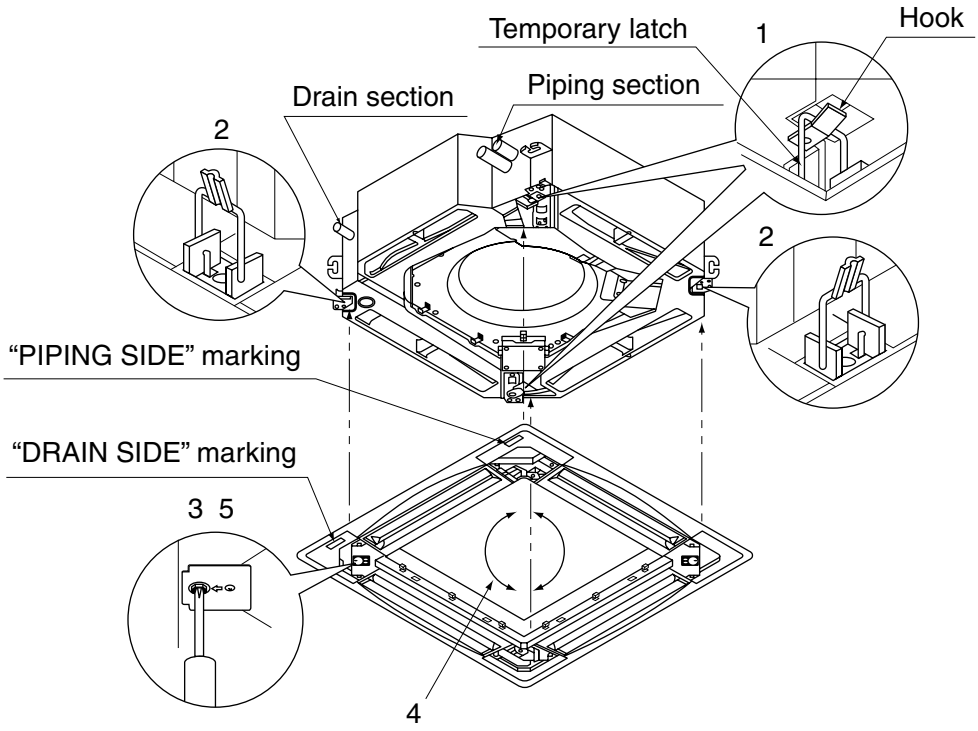

Fig. 5

5 Tighten the screws until the thickness of the sealing material between the decoration panel and the indoor unit body reduces to 5-8 mm.

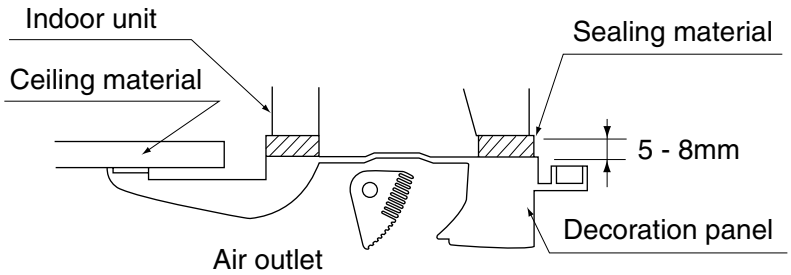

C: 3PA64319-11M

[PRECAUTIONS]

- Inproper screwing of the screws may cause the troubles shown in Fig. 6 Screw properly.

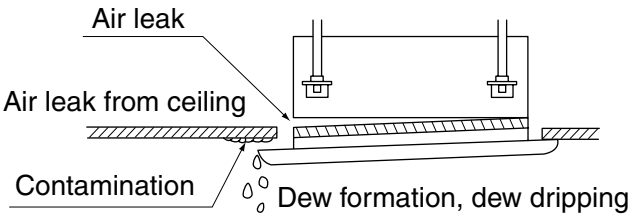

Fig. 6

- If gap is still left between the ceiling and the decoration panel after screwing the screws, readjust the indoor unit body height. **(Refer to Fig. 7)**

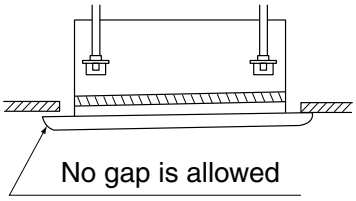

Fig. 7

Adjustment of the indoor unit body height from the holes in the corner of the decoration panel is possible if the indoor unit is kept leveled and the drain piping, etc. is unaffected.

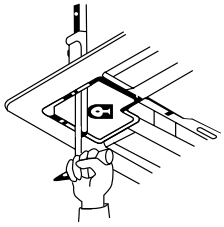

(3) Wiring of the decoration panel **(Refer to Fig. 8)**

6 Remove the terminal box lid.

7 Connect the connectors for swing flap motor lead wire installed on the decoration panel.

8 Replace the terminal box lid reversing the procedure to remove it.

Make sure that the swing flap motor lead wire is not caught between the indoor unit and the decoration panel.

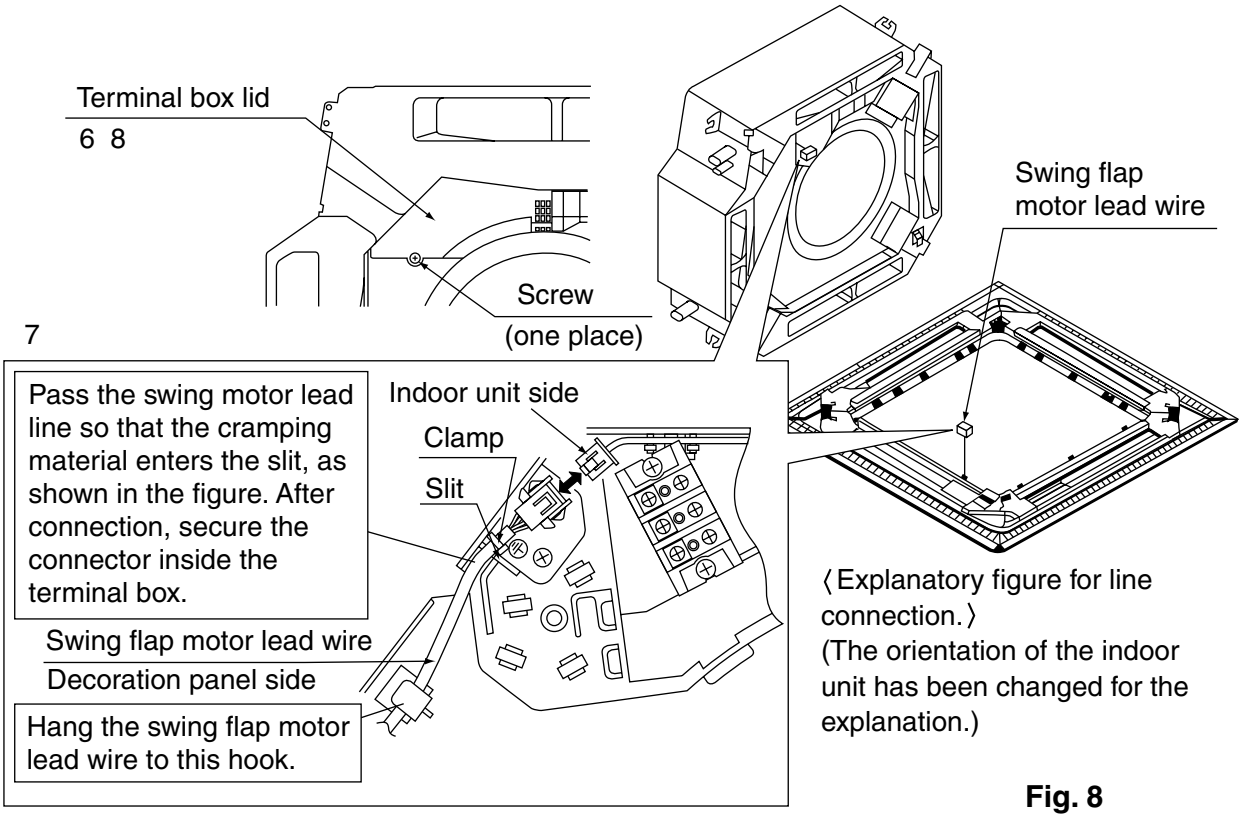

Fig. 8

C: 3PA64319-11M

4. INSTALLATION OF SUCTION GRILLE AND SERVICE COVER

(1) Install the suction grille
Install by reversing the procedure shown in “PREPARATION OF DECORATION PANEL”.
It is possible to install the suction grille in 4 directions by turning the suction grille.
Change the direction when adjusting the direction of the suction grille of multiple units or in meeting customers’ demands.

NOTE
Be careful not to get swing flap motor lead wire get caught when installing the suction grille.

(2) Install the service cover on the corner.

1 Attach the string of the service cover to the pin of the decoration panel. **(Refer to Fig. 9)**

2 Install the service cover over the decoration panel. **(Refer to Fig. 10)**

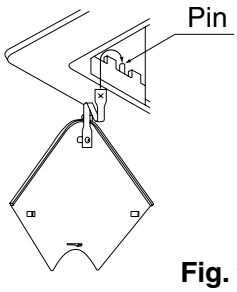

Fig. 9

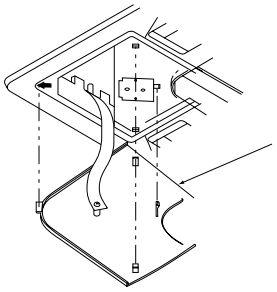

Fig. 10

C: 3PA64319-11M

2.3 KDBH55K160F — Sealing Member of Air Discharge Outlet

KDBH55K160 / KDBH55K160F

Dimensions Unit (mm)

Sealing materials for long air outlets (Polyethylene foam t10): 2 pieces

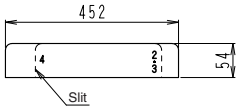

Sealing materials for horizontal blades (Polyethylene foam t10): 8 pieces

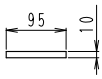

Sealing materials for air outlets at the corner (Polyethylene foam t10): 1 piece for each

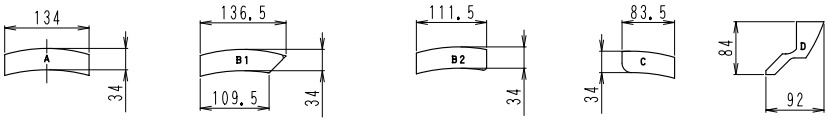

Tape for sealing materials
for long air outlets (Non-woven fabric t0.6): 2

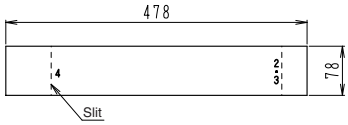

Tape for sealing materials
for air outlets at the corner (Non-woven fabric t0.6): 3

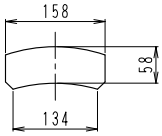

Tape for sealing materials
for air outlets at the corner (Non-woven fabric t0.6): 1

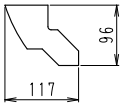

Side insulation plate (NB foam t10) : 2

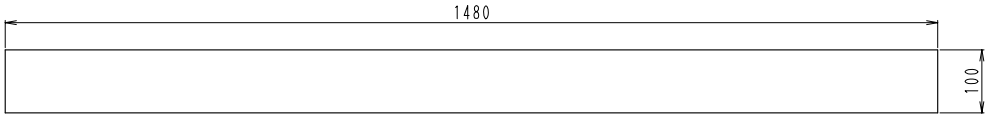

Antisweat material (Flocking tape): See right

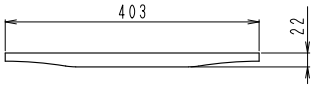

Applicable part number	Q'ty and color
KDBH55K160F	4, grey
KDBH55K160	4 for each, Dark grey or black

Antisweat material (Flocking tape): See right

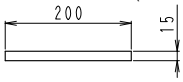

Applicable part number	Q'ty and color
KDBH55K160F	4, grey
KDBH55K160	4 for each, Dark grey or black

J: D3K05112

Installation Manual

Precautions

- Use this manual with the installation manuals attached to the indoor unit's main body and decoration panel.
- When other separately-sold products are mounted, the 3-way blow and 2-way blow may not be selected. For details, refer to the Engineering Data or catalog.

Parts content Check the following parts.

Name	Longitudinal air outlet sealing material	Corner air outlet sealing material A	Corner air outlet sealing material B1	Corner air outlet sealing material B2	Corner air outlet sealing material C	Corner air outlet sealing material D	Longitudinal air outlet tape for fixing the sealing material	Corner air outlet tape for fixing the sealing material	Corner air outlet tape for fixing the sealing material
Number of pieces	2	1	1	1	1	1	2	3	1
Shape/Symbol	1 (4, 2, 3)	2 A	3 B1	4 B2	5 C	6 D	7 (4, 2, 3)	8	9

Name	Absorbent (Inside 1)		Absorbent (Inside 2)	Absorbent (Outside)	Absorbent (Bridge centre)	Absorbent (Bridge outside)
Number of pieces	2	1	1	2	2	2
Shape/Symbol	10 Use only FXFQ25~50PVE, FXFQ25~50LUV1 24mm×328mm	11 Use only FCQ50~140LUV1, FCQ50~140KVEA FCQN71~140KVEA, FCQ71/100KVLT FCQ125/140KAVLT, FCQ30~48LUV2S FXFQ63~125PVE, FXFQ63~125LUV1 24mm×410mm	12 Use only FXFQ25~50PVE, FXFQ25~50LUV1 24mm×290mm	13 8mm×505mm	14	15 Use only FXFQ25~50PVE, FXFQ25~50LUV1 47mm×47mm

The sticking procedure for absorbent differs with FXFQ25~50PVE, FXFQ25~50LUV1 and with FCQ50~140LUV1, FCQ50~140KVEA, FCQN71~140KVEA, FCQ71/100KVLT, FCQ125/140KAVLT, FCQ30~48LUV2S, FXFQ63~125PVE, FXFQ63~125LUV1. (Refer to ❷ Sticking of absorbent to air outlet.)

Name	Side insulator plate	Horizontal blade absorbent				Horizontal blade sealant
		With 4-blade KDBH55K160F	With 8-blade (2 colours) KDBH55K160	With 4-blade KDBH55K160F	With 8-blade (2 colours) KDBH55K160	
Number of pieces	2					8 pieces
Shape/Symbol	16 100mm×1480mm	17 (With KDBH55K160, two colours are available: gray and black, matching the blade colours.)		18 15mm×200mm (With KDBH55K160, two colours are available: gray and black, matching the blade colours.)		19 10mm×95mm

❶ Blow Direction Selection and Sealing Material Mounting

(1) Blow direction selection

- Depending on the installation location, select a blow direction from the table below. For the second code number, refer to ❹ Field Setting.
  For the selection of installation location, refer to the installation manual attached to the indoor unit's main body.

Precautions Blow direction patterns other than those shown in the figure below cannot be selected. (Condensation may occur.)

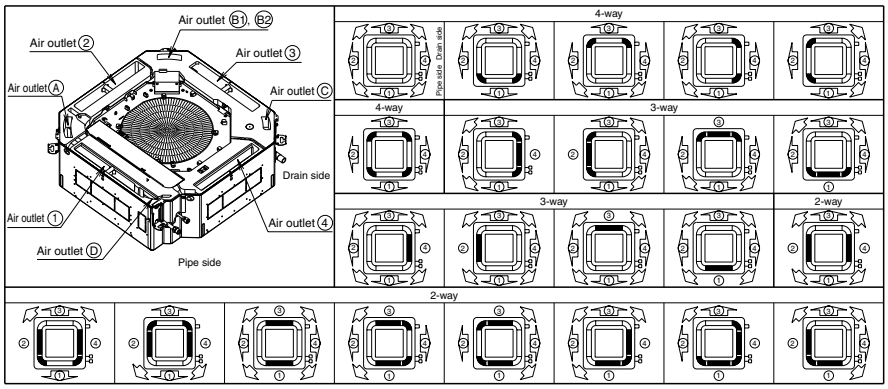

(2) Matching with the corner air outlets Ⓐ to Ⓓ that are to be blocked, stick the sealing material to the tape for fixing the sealing material.
(Stick the sealing material so that the sealing material comes to the positions shown in the schematic diagram.)

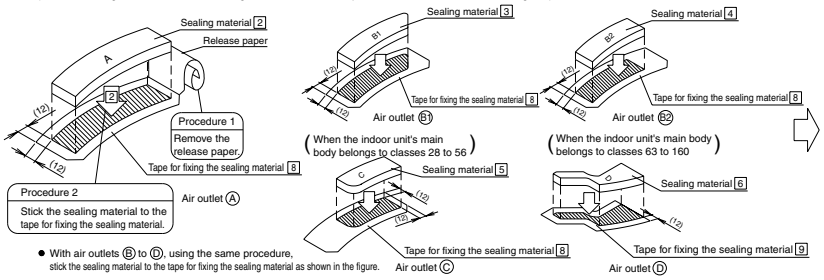

- With air outlets Ⓑ to Ⓓ, using the same procedure, stick the sealing material to the tape for fixing the sealing material as shown in the figure.

(3) Stick the sealing material that was prepared in (2) to the air outlet of indoor unit main body.

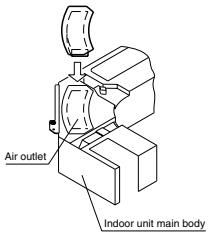

Precautions

- The sealing material has a directional property. Be sure to stick the sealing material to the tape for fixing the sealing material so that the printed number of outlet to be blocked becomes visible.
- When blocking both the air outlet 1 and air outlet Ⓓ, start the sticking of sealing material with the air outlet Ⓓ.

(4) Matching the longitudinal air outlet numbered 1 to 4 that are to be blocked, prepare the sealing material and tape for fixing the sealing material.

- Cut both the sealing material and tape for fixing the sealing material along the perforation (dotted line).
- Stick the sealing material to the tape for fixing the sealing material.
  (Stick so that the sealing material comes to the centre of tape for fixing the sealing material.)

Example) When blocking air outlet 2 or 3

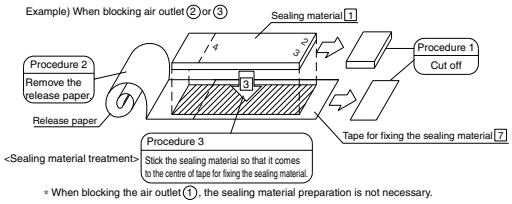

* When blocking the air outlet 1, the sealing material preparation is not necessary.

(5) Stick the sealing material that was prepared in (4) to the air outlet of indoor unit main body.

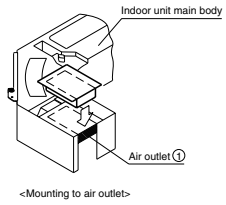

Precautions The sealing material has a directional property. Be sure to stick the sealing material to the tape for fixing the sealing material so that the printed number of outlet to be blocked becomes visible.

JC: 1P177350A

❷ Sticking of Absorbent to Air Outlet

● Stick the absorbent indicated in the table below to the air outlet that was not blocked in ❶ according to the procedure shown in the figure below.

	FXFQ25~50PVE, FXFQ25~50LUV1	FCQ50~140LUV1, FCQ50~140KVEA, FCQN71~140KVEA, FCQ71/100KVLT FCQ125/140KAVLT, FCQ30~48LUV2S, FXFQ63~125PVE, FXFQ63~125LUV1
Air outlet ①	——	——
Air outlet ②	Absorbent 10 13 14 Total 3 pieces	——
Air outlet ③	Absorbent 10 13 14 15 Total 4 pieces	Absorbent 11 13 14 Total 3 pieces
Air outlet ④	Absorbent 12 15 Total 2 pieces	——

Precautions
- If the sticking of absorbent is omitted, condensation may occur.
- To positions where the absorbent is already stuck, the sticking of absorbent is not necessary.

FXFQ25~50PVE, FXFQ25~50LUV1

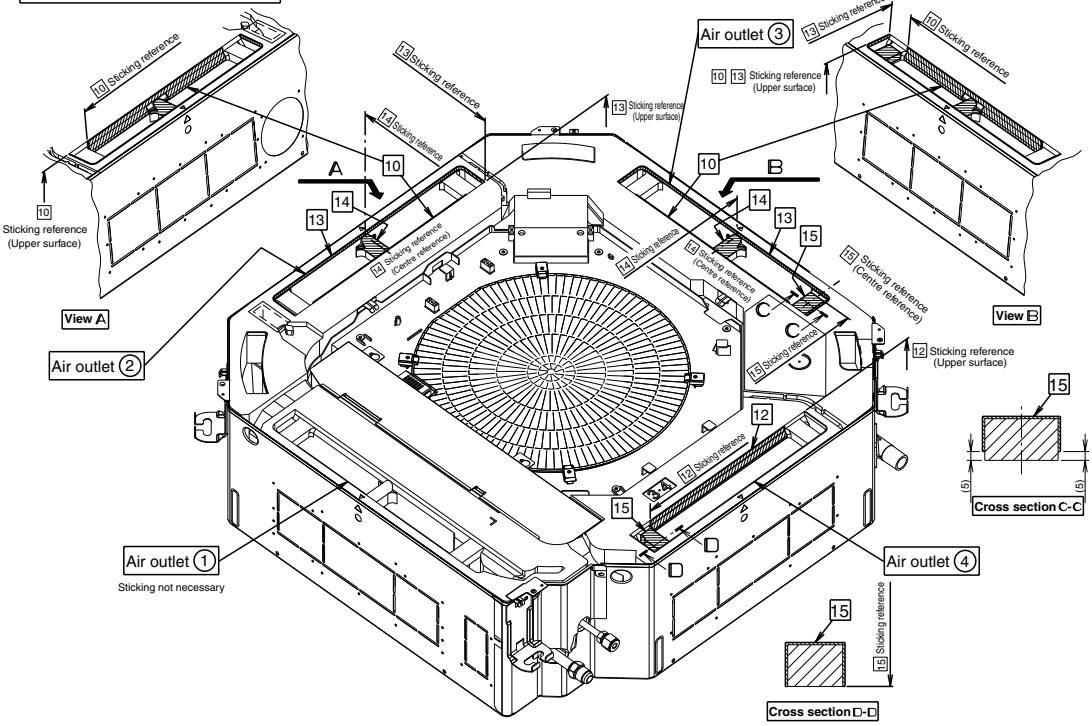

FCQ50~140LUV1
FCQ50~140KVEA
FCQN71~140KVEA
FCQ71/100KVLT
FCQ125/140KAVLT
FCQ30~48LUV2S
FXFQ63~125PVE
FXFQ63~125LUV1

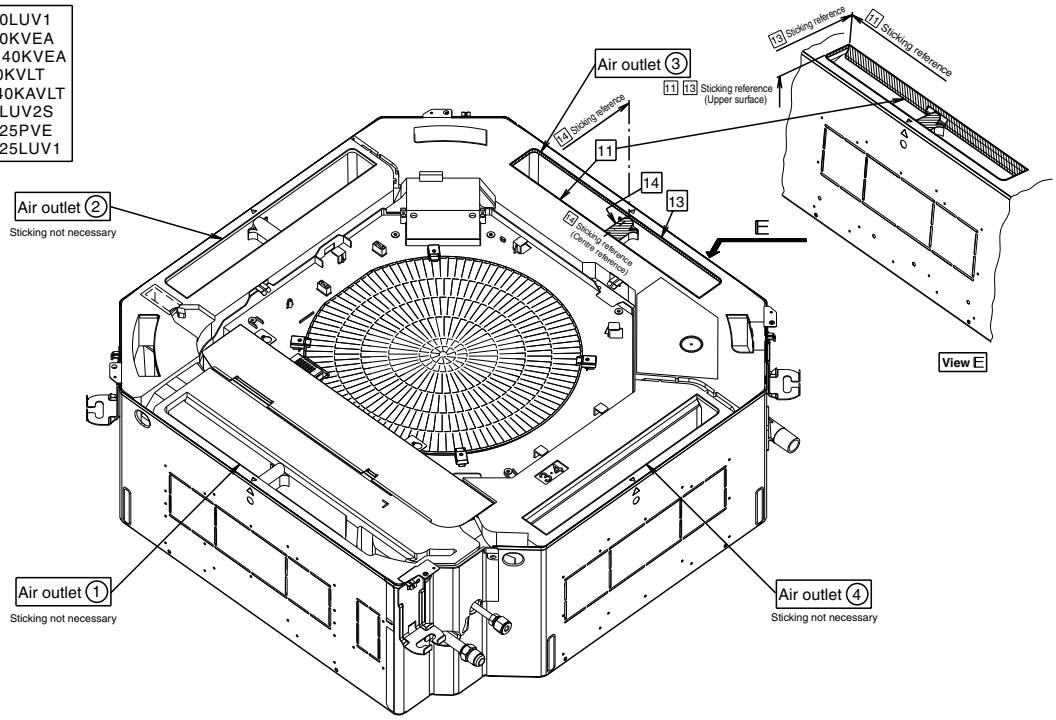

continued on back side

JC: 1P177350A

❸ Sticking of Insulator to Indoor Unit Main Body

● For safety, be sure to shut off power supply before starting the insulator sticking operation, decoration panel mounting operation, and connecting of connectors for swinging.

Precautions If the sticking of insulator is omitted, condensation may occur.

● Stick the side insulator plate 16 according to the figure below.

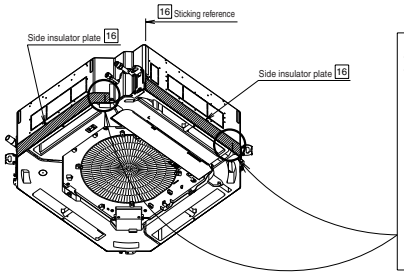

For a wiring takeoff point with two sections, make a slit on the side insulator plate 16 as shown in the figure below, then route the wiring.

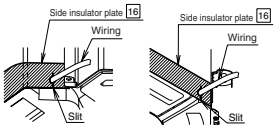

Wiring takeoff point

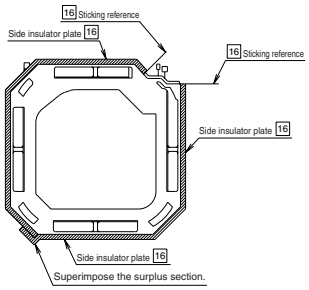

❹ Sticking of Absorbent to Panel Horizontal Blade

● Perform the operation on soft cloth to prevent damage to the panel.
● Perform sticking for the horizontal blades of all air outlets.
● Do not apply force to the horizontal blade. (Application of force may lead to horizontal blade swing failure.)

● According to the figure below, stick the horizontal blade absorbent 17 and 18 as well as the horizontal blade sealing pad 19.
(With KDBH55K160, stick the horizontal blade absorbent with matching blade colour.)

Precautions When the sticking of absorbent and sealant is omitted, condensation may occur.

① Stick the horizontal blade absorbent 17 in line with the blade shape to the front face of the horizontal blade.

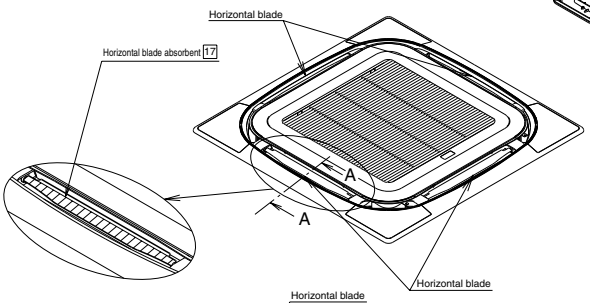

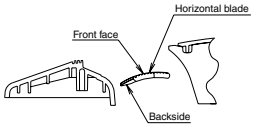

A-A cross section

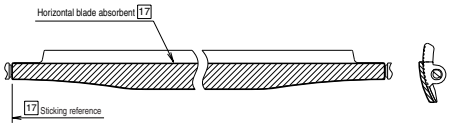

② Stick the horizontal blade sealing pad 19 to the backside of the blade. (For both left and right)

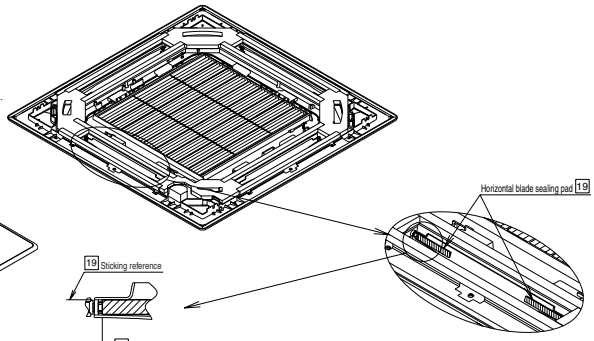

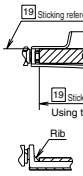

Using the base of the rib as a reference, stick without leaving any gap.

③ Stick the horizontal blade absorbent 18 in between the horizontal blade sealing pad 19.

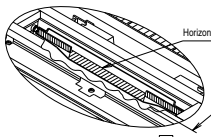

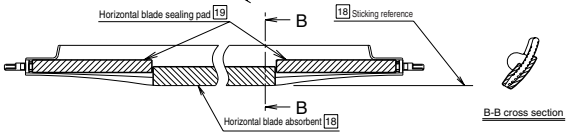

B-B cross section

❺ Field Setting

● Depending on the installation status of the indoor unit's main body, the field setting needs to be performed by remote control operation.

● Perform the setting by switching among the following three items: "Mode number", "First code number", and "Second code number".
● The setting procedure and operation method are described in "How to perform field setting" attached to the remote control.

(1) Setting by number of air outlets used
While referring to "How to perform field setting" attached to the remote control, perform the setting according to the table in the right.
Also, when the corner air outlet is blocked with 4-way blow, set the wind direction slightly downward.
(Note) When the installation height becomes higher than the standard, the setting by ceiling height in (2) becomes necessary.

(2) Setting by ceiling height
For the ceiling height, refer to the guidelines of ceiling height and number of air outlets used, then perform the setting for each air outlet used according to the table below.

(Guidelines of ceiling height and number of air outlets used)

		Number of air outlets used							
Indoor unit applicable model	SkyAir	FCQ50-71LUV1 FCQ71KVLT FCQ50-71KVEA FCQN71KVEA				FCQ100-140LUV1 FCQ100KVLT FCQ100-140KVEA FCQ125/140KAVLT FCQ30-48LUV2S FCQN100-140KVEA			
	VRV	FXFQ25-80PVE FXFQ25~80LUV1				FXFQ100/125PVE FXFQ100/125LUV1			
		All-around blow	4-way blow	3-way blow	2-way blow	All-around blow	4-way blow	3-way blow	2-way blow
Ceiling height	Standard	2.7m or less	3.1m or less	3.0m or less	3.5m or less	3.2m or less	3.4m or less	3.6m or less	4.2m or less
	High ceiling ①	3.0m or less	3.4m or less	3.3m or less	3.8m or less	3.6m or less	3.9m or less	4.0m or less	4.2m or less
	High ceiling ②	3.5m or less	4.0m or less	3.5m or less	——	4.2m or less	4.5m or less	4.2m or less	——

Values for ceiling height are provided as reference.

[Setting content] (Setting by number of air outlets used)

(Number of air outlets used)	Mode number	First code number	Second code number
3-way blow	13 (23)	1	02
2-way blow			03

[Setting content] (Setting for when corner air outlet is blocked with 4-way blow)

(Wind direction)	Mode number	First code number	Second code number
Standard	13 (23)	4	02
Slightly downward			03

[Setting content] (Setting by ceiling height)

	Mode number	First code number	Second code number
Standard	13 (23)	0	01
High ceiling ①			02
High ceiling ②			03

JC: 1P191031A

2.4 KDBH55D160W — Sealing Material of Air Discharge Outlet

Dimensions

Unit (mm)

Absorbent material for horizontal blades: See right

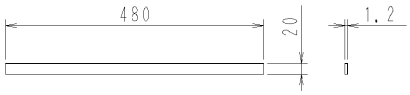

Applicable part No.	Q'ty and color
KDBH55D160W	3: white
KDBH55D160	4×3: 12 pcs Ivory, gray, beige, black

Accessory:
Installation Manual

Absorbent material for bellmouse

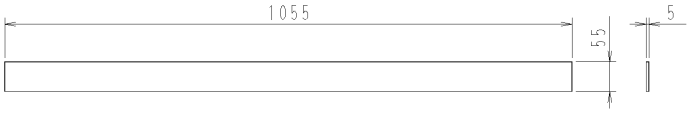

Sealing material: 2 pcs

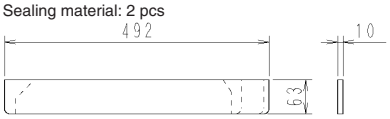

Tape for sealing material: 2 pcs

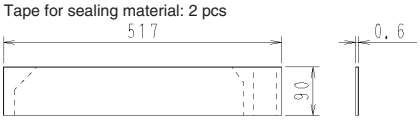

Side insulation plate: 2

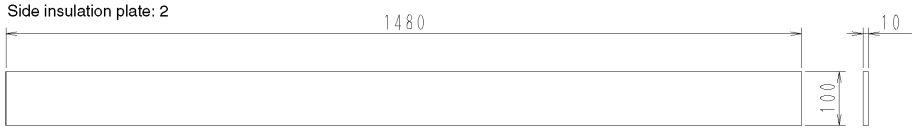

J: D3K03277

Installation Manual

Caution

- Refer to the installation manual for both indoor unit and the decoration panel.
- When you install other optional kit , it may not be possible to select the 3-way or 2-way air discharge. (followed table)
  For details , refer to the manual for the optional kit or the catalogue.

Optional kit	4-way air discharge	3-way air discharge	2-way air discharge
Branch duct chamber	○	○	○
High efficiency filter chamber	○	× Not possible to install	× Not possible to install

Contents of Kit

Prior to installation make sure you have the complete of parts.

Name	Sealing Material	Tape for fixing the Sealing Material	Insulation for Side Plate	Moisture Absorber for Bell-Mouth	Moisture Absorber for Swing flap	Spacer	Spacer installation screw
Quantity	2 pieces	2 pieces	2 pieces	1 pieces	3 pieces	1 pieces	1 pieces
Shape・marking	①	②	③ 100mm×1480mm	④ 55mm×1055mm	⑤	⑥	⑦ (M3x10)

❶ The direction of air discharge and the positioning of sealing material

(1) Selection of the air outlet

- Select the direction of air discharge from the following table according to the location of the indoor unit.
  Refer to ❷ Setting of indoor unit) Setting of indoor unit for setting position number.
  Refer to the installation manual attached to the indoor unit for selection of installation location.

Caution Never select the direction of air discharge other than the following pattern.
(You may have a condensation problem.)

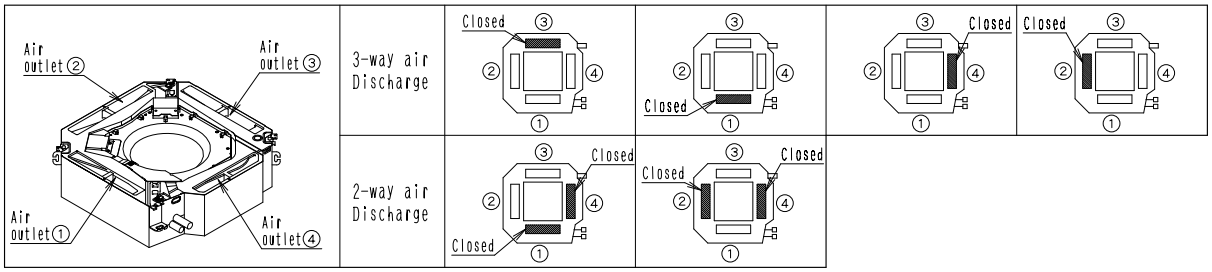

(2) Prepare the sealing material and the tape for fixing the sealing material according to the air outlet No. to be closed.

- Cut off the sealing material and the tape along the perforated lines (marked ———).
- Adhere the sealing material to tape. (Make sure that the sealing material is placed at the center of the tape.)

Example) For closing the air outlet ①
< How to prepare the sealing material >

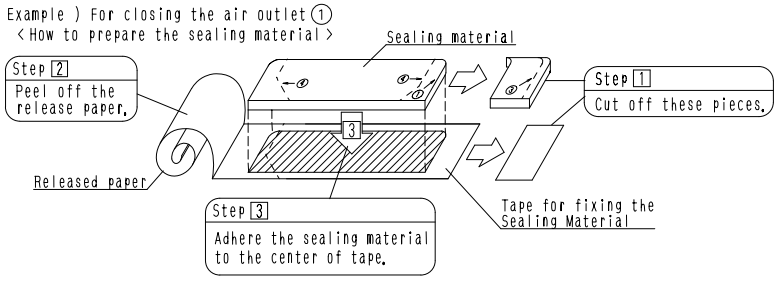

※When closing the air outlet②, it is not required to work on the sealing material.

(3) Adhere the sealing material prepared according to the procedure (2) to the indoor unit air outlet.

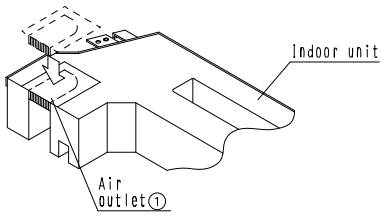

< Installation for air outlet >

Caution

The sealing material has directional characteristics.
Make sure to adhere the sealing material fixing tape in the direction which the parts from ① to ④ can be seen as shown above.

1P088448A

❷ Setting for indoor unit

It is required to make a field setting from the remote controller according to how the indoor units are installed.
The direction of air discharge must also be set by the remote controller.

- The 3 different kinds of setting such as "Mode number", "First code number" and "Second code number" must be made by the remote controller.
- Refer to the item of "Field setting" in the operation manual of the remote controller for the setting procedure.

(1) Setting according to number of use of the air discharge.
Check the setting position number corresponding to the direction of air discharge in a right table.

(Content of setting)

(Number of use of air outlets)	Mode number	First code number	Second code number
3-way air discharge	13(23)	1	02
2-way air discharge			03

Note) Refer to the table for height of the ceiling for each direction of air outlet. (The setting of the ceiling height is also required.)

(2) Setting according to height of ceiling.
As for the ceiling height, see the left table below which shows the standard of ceiling height and number of air outlets to be used.
Then, taking this standard into account, make a field setting of ceiling height from the remote controller according to the right table below.

(Standards of ceiling height and number of air outlets)

		Number of use of air outlets					
Indoor unit applicable model	SkyAir	FHC35/50/60KVE, FHYC35/50/60/71KVE, FHC18/21/26NUV1, FHC18NUV2S, FHC21KV2S			FHYC100/125/140KVE, FHC30/36/42/48NUV1, FHC30/36/42PUV2S, FHC24/48NUV2S, FHC71DV2S		
	VRV	FXF25/32/40/50/63/80LVE			FXF100/125LVE		
		4-way air discharge	3-way air discharge	2-way air discharge	4-way air discharge	3-way air discharge	2-way air discharge
Ceiling height (m)	Standard	~2.7	~3.0	~3.5	~3.2	~3.6	~4.2
	Semi-high	2.7~3.0	3.0~3.3	3.5~3.8	3.2~3.6	3.6~4.0	~4.2
	High	3.0~3.5	3.3~3.5	——	3.6~4.2	4.0~4.2	——

(Content of setting)

		Mode number	First code number	Second code number
Ceiling height(m)	Standard	13(23)	1	01
	Semi-high			02
	High			03

(Ceiling height is reference value)

❸ Installation of the insulation

Please turn off the power supply for safety absolutely, before you do installation of the decoration panel and affixation of insulation and connected work of swing conector.

(1) Adhere the insulations for side plate ③ in position, referring Fig. 1.
(2) Adhere the moisture absorber for bell-mouth ④ on the inner surface of the bell-mouth. See Fig. 1 Fig. 2.
(3) Adhere the moisture absorber for swing flap aligning with the upper edge of the swing flap on the air outlet. See Fig. 3.

Fig. 1

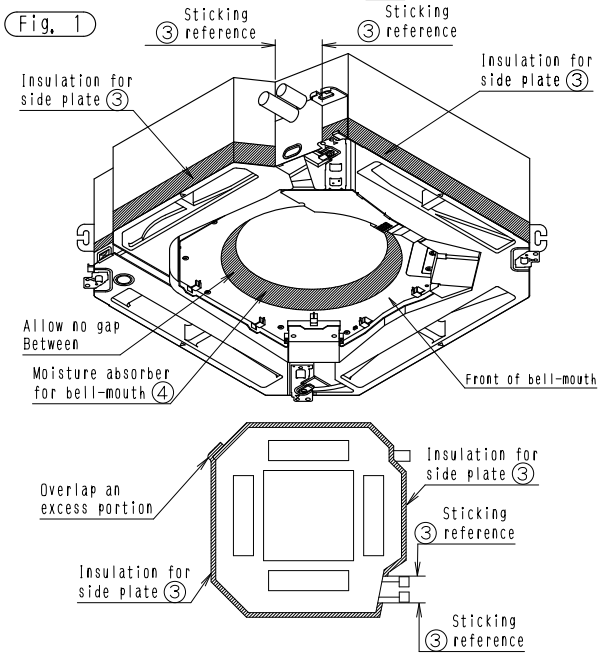

Fig. 2

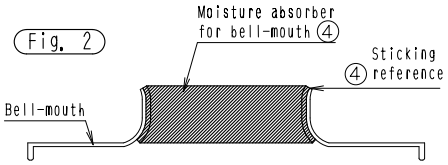

Section of the bell-mouth

Fig. 3

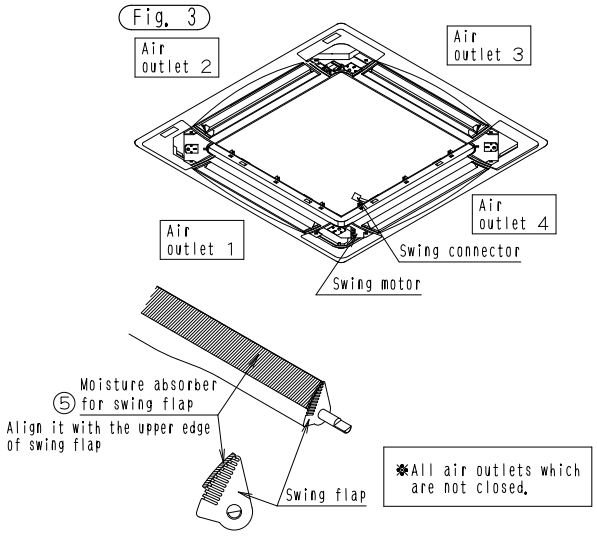

※All air outlets which are not closed.

❹ Installation of the spacer

Please install spacer ⑥ on the swing motor with the spacer installation screw ⑦.

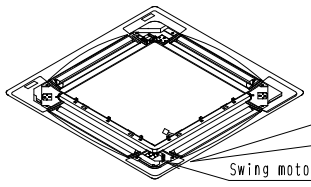

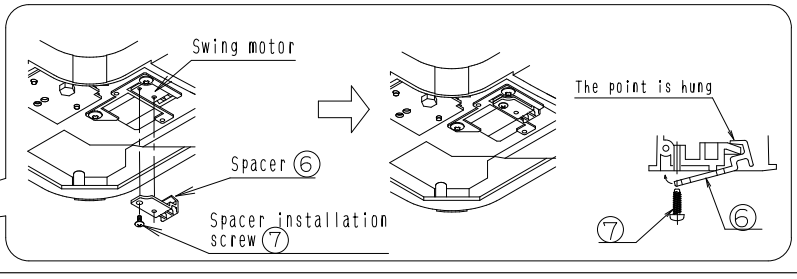

C: 1P088448A

2.5 KDBP55H160FA / WA — Panel Spacer

KDBP55H160FA

Item / Model		KDBP55H160FA	KDBP55H160WA
Exterior		Fresh White (6.5Y9.5/0.5)	White (10Y9/0.5)
Material		Outside frame: Resin Insulation: Polyethylene foam	
Accessories		Fixture: 4 pieces Screws: 1 set Sealing material: 1 set Installation manual.	
Mass	kg	1.2	

- Using the panel spacer in areas of the ceiling with limited space makes it possible to install the air conditioner.
- Hides the gap between the decoration panel and the ceiling.

Caution

- When the panel spacer is installed, it is not possible to have 2-way air outlet.
- Refer to the installation manual for both indoor unit and the panel spacer for its installation.

Dimensions Unit (mm)

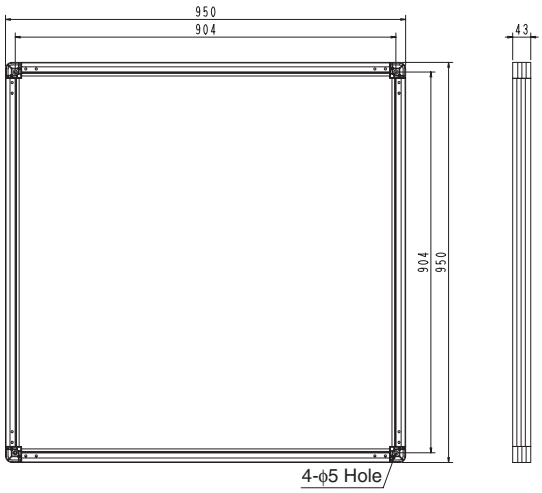

J: D3K04626

Installation Manual

Combination table

Panel spacer	KDBP55H160FA	KDBP55H160WA KDB55K160WA
Decoration panel	BYCP125K-W1 BYCP125K-WS	BYCP125D-W1 BYC125K-W1 BYCP125-W2 BYC125KJW1 BYC125K-W1S

Caution

- When the Panel Spacer is installed, it is not possible to have 2-way air outlet.
- Refer to the installation manual for both indoor unit and the Panel spacer for its installation.

Contents of kit

Check if following parts are included with your kit.

Name	Panel spacer frame	Resin corner part	Fixing metal	Screw
Quantity	4 PCS.	4 PCS.	4 PCS.	28 PCS.
Shape・number	① 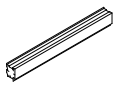	② 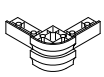	③	④ M4×10 Tapping screw (Class 2)

Name	Sealing material		Caution label	Others
Quantity	2 PCS.	2 PCS.	1 PC.	• This Installation Manual
Shape・number	⑤	⑥	⑦	

❶ Preparation of the Decoration panel

- Handle the decoration panel with care.

Never place the panel face down, or lean the panel against wall or place on the projective object.
(It causes the dent or damage of the surface of the panel or damage of swing motor.)

(1) Remove the suction grill from the decoration panel.
(Refer to the installtion manual of the decoration panel how to remove.)

(2) Place the panel face down on the corrugated board or the vinyl sheet to protect the surface of the panel.

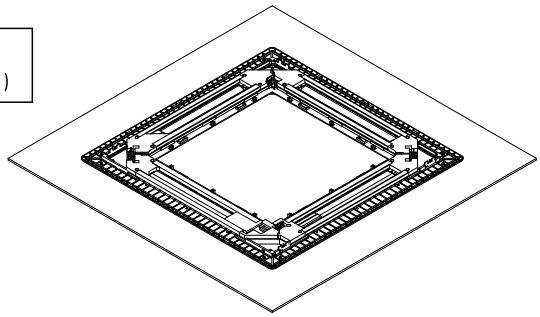

❷ Installation of the indoor unit

Adjust the height of the indoor unit.

Be sure the piping will not contact with the ceiling joist etc. after adjusting the height.

Standard installation

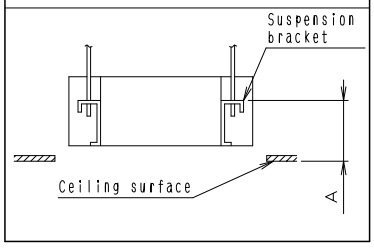

When the Panel spacer is installed

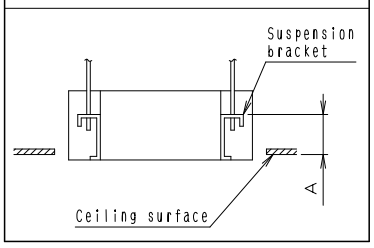

Decoration panel	A(mm)
BYCP125D-W1 BYC125K-W1 BYC125K-W2 BYC125KJW1 BYC125K-W1S	145~150
BYCP125K-W1 BYCP125K-WS	125~130

Decoration panel	A(mm)
BYCP125D-W1 BYC125K-W1 BYC125K-W2 BYC125KJW1 BYC125K-W1S	105~110
BYCP125K-W1 BYCP125K-WS	85~90

C: 1P136564E

❸ Assembly of panel spacer

(1) Assemble the panel spacer frame ① and the plastic corner joint ② temporarily.

(2) Fix with the screws ④ from the top.
(4 screws in each corner)

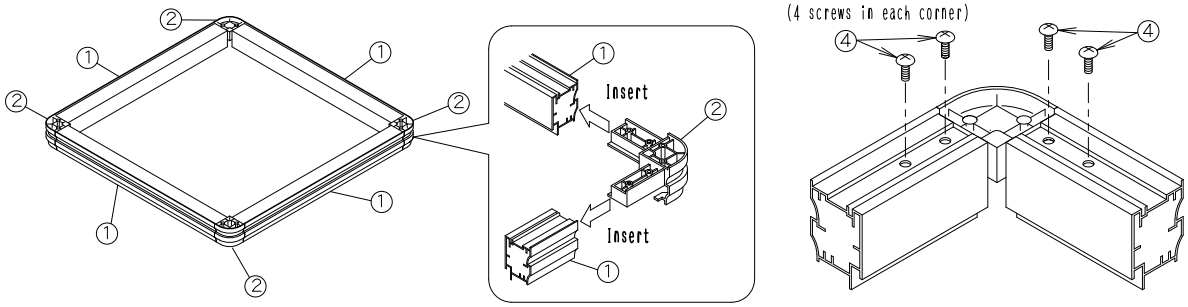

❹ Fixing to the Decoration panel

(1) Set the fixing metal ③ on each corner with screws ④.
(Screw positions change with decoration panels, as shown in the following figure.)

(2) Place the panel spacer assembled in item ③ Assembly of panel spacer of the above on the outer frame of the Decoration panel.

(3) Fix the panel spacer to the fixing metal ③ with screws ④ (4 portions).

● In the case of BYCP125K-W1

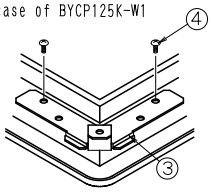

● In the cases of other than the above.

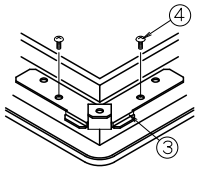

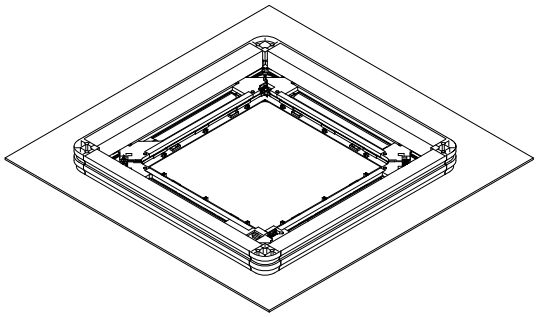

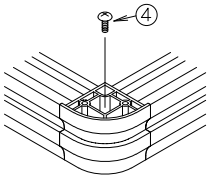

❺ Adhesion of the sealing material

Adhere the sealing material ⑤ ⑥ on the upper face of the panel spacer in the order of ⑤ and ⑥.

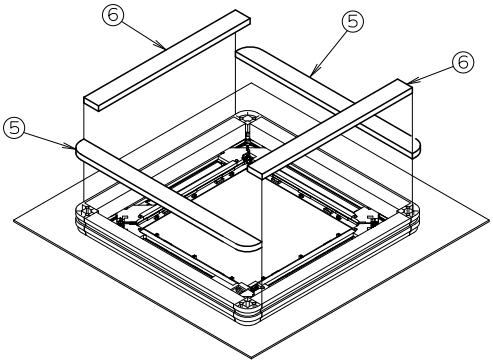

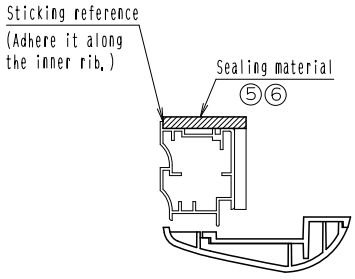

❻ Installation of the Decoration panel

(1) install the decoration panel to the indoor unit according to the installation manual of decoration panel.

The panel spacer is not firmly fixed to the decoration panel, so that never hold the panel spacer directly or lean the decoration panel extremely.

(2) After installation of the Decoration panel, adhere the caution sticker ⑦ next to the name plate of the indoor unit as shown on the right.

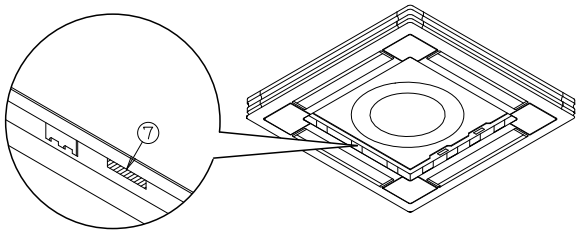

1P136564E

2.6 KDDP55B160(K) — Fresh Air Intake Kit (Chamber Type)

KDDP55B160 (without T-shape, without Fan)

Item \ Model		KDDP55B160
Fresh air intake method		Fresh air intake by air conditioning fan
Diameter of connection duct		ϕ150
Mass	kg	4.5

Dimensions Unit (mm)

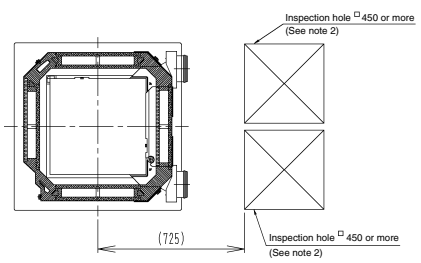

How to establish an inspection hole

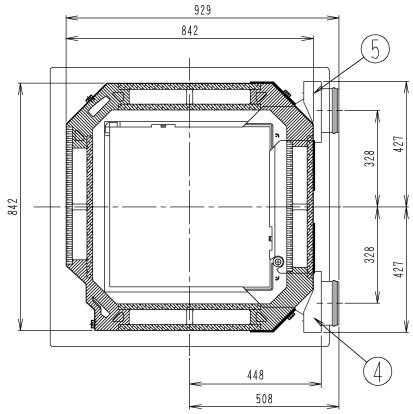

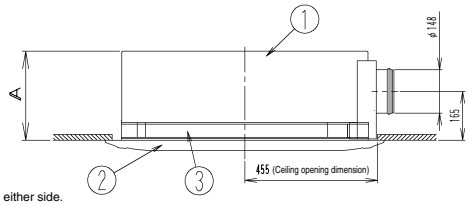

Number	Name	Description
1	Indoor unit main body	
2	Decoration panel	
3	Suction chamber	
4	Connecting port chamber (right)	
5	Connecting port chamber (left)	

Accessories
- Screws (M5×12) : 4 pieces
- Sealing materials for air outlets at the corner
- Tape for fixing sealing materials for air outlets at the corner
- Installation manual

Resistance in the passage inside the chamber

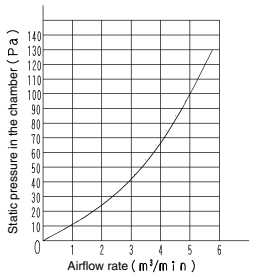

Note)
1. Maximum length of the duct is 4 meters.
2. When installing this kit, an inspection hole is required (in order to maintain this kit). Establish an inspection holes on either side.
3. This kit is field assembly.
4. Install the hanging fixing for the T joint. Otherwise the load from T-shape pipe assembly, etc., could create a gap between the indoor unit and suction chamber.
5. When mounting the duct fan, be sure to use the wiring modification adaptor to interlock with the indoor unit fan.
6. With the intake air volume, 10% or less of the "H" wind volume of the indoor unit is recommended.
   Excessive intake air volume may increase the operation sound level or affect the performance of the suction air temperature detection in the indoor unit.

Decoration panel	Indoor unit		A (mm)
BYCP125K-W1	SkyAir	FCQ50-71LUV1, FCQ50-71KVEA, FCQN71KVEA, FCQ71KVLT	306
	VRV	FXFQ25-80PVE	
	SkyAir	FCQ100-140LUV1, FCQ100-140KVEA, FCQN100-140KVEA, FCQ100KVLT, FCQ125/140KAVLT	348
	VRV	FXFQ100/125PVE	
BYCP125K-WS	SkyAir	FCQ30-48LUV2S	

JC: D3K07959

KDDP55B160K (with T-shape, without Fan)

Item / Model		KDDP55B160K
Fresh air intake method		Fresh air intake by air conditioning fan
Diameter of connection duct		ϕ150
Mass	kg	6.5

3

Dimensions

Unit (mm)

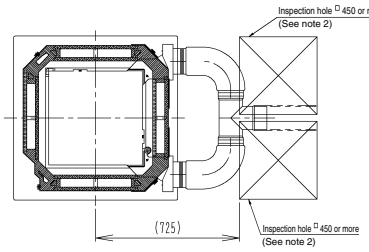

How to establish an inspection hole

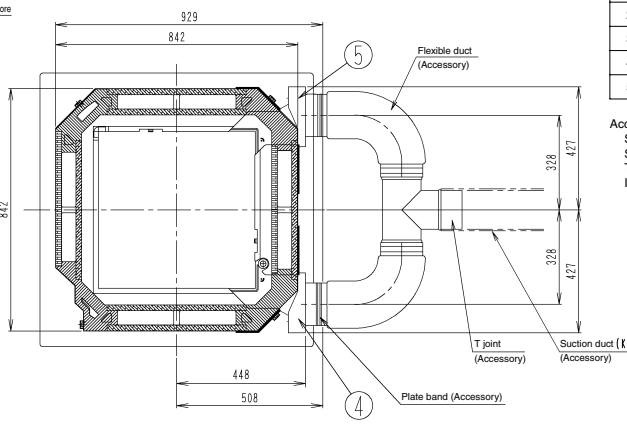

Number	Name	Description
1	Indoor unit main body	
2	Decoration panel	
3	Suction chamber	
4	Connecting port chamber (right)	
5	Connecting port chamber (left)	

Accessories
- Screws (M5×12) : 4 pieces
- Sealing materials for air outlets at the corner
- Tape for fixing sealing materials for air outlets at the corner
- Installation manual

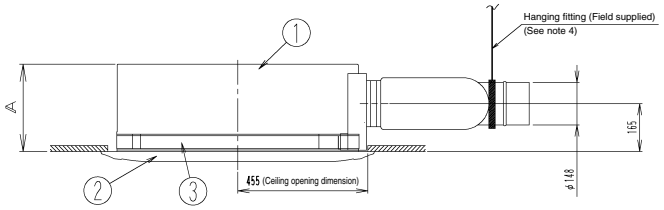

Resistance in the passage inside the chamber (Note 7)

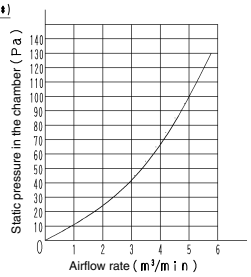

Note)
1. Maximum length of the duct is 4 meters.
2. When installing this kit, an inspection hole is required (in order to maintain this kit). Establish an inspection holes on either side.
3. This kit is field assembly.
4. Install the hanging fixing for the T joint. Otherwise the load from T-shape pipe assembly, etc., could create a gap between the indoor unit and suction chamber.
5. When mounting the duct fan, be sure to use the wiring modification adaptor to interlock with the indoor unit fan.
6. With the intake wind volume, 10% or less of the "H" wind volume of the indoor unit is recommended.
7. This graph shows values from the inlet of the T joint through that of the indoor unit when KDDP55B160K (with a T joint) is connected.

Decoration panel	Indoor unit		A (mm)
BYCP125K-W1	SkyAir	FCQ50-71LUV1, FCQ50-71KVEA, FCQN71KVEA, FCQ71KVLT	306
	VRV	FXFQ25-80PVE	
	SkyAir	FCQ100-140LUV1, FCQ100-140KVEA, FCQN100-140KVEA, FCQ100KVLT, FCQ125/140KAVLT	348
	VRV	FXFQ100/125PVE	
BYCP125K-WS	SkyAir	FCQ30-48LUV2S	

JC: D3K07961

Installation Manual

⚠Caution After thoroughly reading these "Safety precautions", properly perform the installation.

- For the installation parts, accessory parts and specified components must always be used. If the specified components are not used, the kit may fall or an air leak may occur.
- After the completion of installation, perform a test run to check that no abnormality is present.

Recommendations

- This product can be mounted to a ceiling mounted cassette-type air conditioner <Round flow>.
- At the time of mounting, also refer to the installation manual for the indoor unit and to the one for the decoration panel.
- When mounting the duct fan, be sure to use the wiring modification adaptor [KRP1C63] to interlock with the indoor unit fan.
  For the intake wind volume, 10% or less of the indoor unit wind volume of "H" is recommended.
  When the intake wind volume becomes excessive, operation noise may become louder or the intake temperature detection of the indoor unit may be affected.
- Be sure to mount the supplied sensor assembly.
  <For the duct used for field connection, those in the table below are recommended.>

Part name	Part number
Flexible duct (Nominal diameter ϕ150)	K-FDS151D (1m) K-FDS152D (2m) K-FDS153D (3m) K-FDS154D (4m)

Name	⑭ Partition plate
Shape	
Number of pieces KDDP55B160	1
Number of pieces KDDP55B160K	1

Parts content Check the following parts. (Shaded part ⋮⋮⋮ is included in a different package.)

Name	① Suction chamber	② Connecting chamber (left)	③ Connecting chamber (right)	④ Corner air outlet sealing material	⑤ Corner air outlet tape for fixing the sealing material	⑥ Mounting screw	⑦ Sensor assembly	⑧ Clamp	⑨ Mounting screw (for sensor)	⑩ T joint	⑪ Flexible duct	⑫ Sealing pad	⑬ Installation manual
Shape						M5 × 12							(this document)
Number of pieces KDDP55B160	1	1	1	2	2	4	1	2	1	—	—	—	1
Number of pieces KDDP55B160K	1	1	1	2	2	4	1	2	1	1	2	4	1

④, ⑦ and ⑭ are only used in combination with round flow type.

❶ Selection of Installation Location and Establishment of Inspection Opening

(1) Refer to the figure below to select the installation location. Unit (mm)

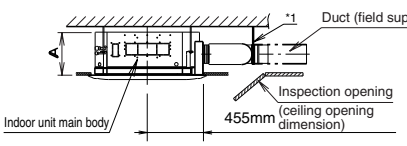

*1. Install the suspension bracket for the T joint section.
Because of the load from T joint, etc., a gap may be created in between the indoor unit and suction chamber.

*2. Establish an inspection opening (□450 or more).
Establish an inspection opening to either side.

Decoration panel	Indoor unit		A (mm)
BYCP125K-W1	SkyAir	FCQ50-71LUV1, FCQ50-71KVEA, FCQN71KVEA, FCQ71KVLT	306
	VRV	FXFQ25-80PVE	
	SkyAir	FCQ100-140LUV1, FCQ100-140KVEA, FCQN100-140KVEA, FCQ100KVLT, FCQ125/140KAVLT	348
	VRV	FXFQ100/125PVE	
BYCP125K-WS	SkyAir	FCQ30-48LUV2S	

(2) Establish an inspection opening.

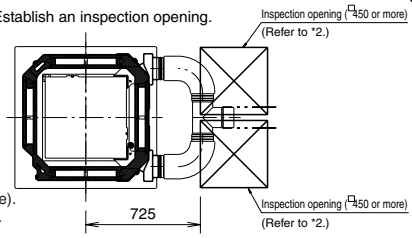

❷ Mounting of Sensor Assemblies and Suction Chamber

* When the indoor unit main body is already installed, perform the following operations, complying with precautions below.

- Shut off power supply before performing operation.
- Remove the decoration panel from the indoor unit main body.
  (For details, refer to the installation manual attached to the decoration panel.)

Round flow

<Mounting of sensor assembly>

(1) According to the installation manual attached to the indoor unit main body, remove the el. compo. box lid.
(2) Using the supplied screws, tighten the sensor assembly together with the bell mouth to the indoor unit main body.
(Mount without pinching the float switch lead wire.)
(3) Remove the connector (X16A) of the existing sensor from the printed circuit board of the indoor unit main body.
(4) Connect the lead wire of the mounted sensor assembly to the connector (X16A) on the printed circuit board of the indoor unit main body as shown in the figure below.
(5) As shown in the figure below, fix the lead wire using the supplied clamp.
(6) After all the wiring is completed, fit the el. compo. box lid. according to the installation manual attached to the main body.
(7) Making sure that the el. compo. box lid. is covered with the partition plate ⑭, tighten these together using the screws on the cover.
(Hook the partition plate tab onto the cover.)

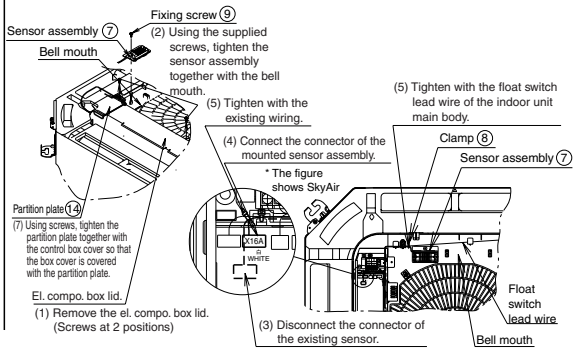

<Mounting of suction chamber>

* Figure shows an example where the indoor unit main body is newly installed.
(1) Stick the corner air outlet tape for fixing the sealing material ⑤ to the corner air outlet sealing material ④, then stick it to the air outlet of the indoor unit main body. (2 positions) (Figure 1) (Figure 2)
(2) Mount the suction chamber ① to the indoor unit main body using the hook (4 positions). (Figure 3) to (Figure 5)
For the fixing method of the hook, refer to (Figure 4), then mount at 4 positions.
* Mount so that the contours of the indoor unit main body and suction chamber match. (Figure 4) (Figure 6)

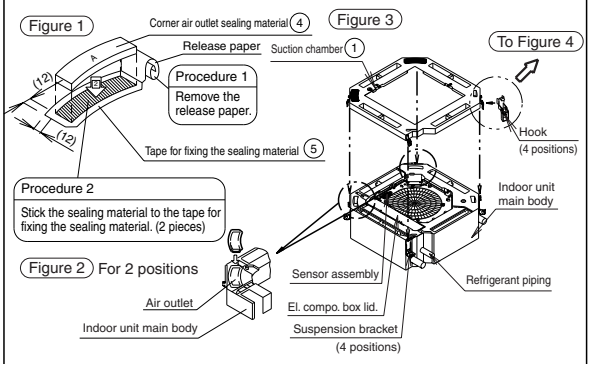

JC: 3K022728B

Figure 4 Mounting status

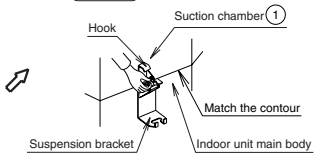

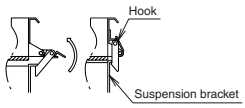

Fixing method of hook

Figure 5 Status after mounting

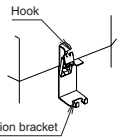

Figure 6 Drawing of mounting at completion

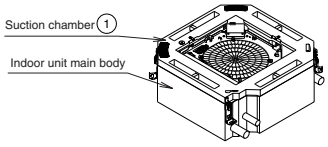

JC: 3K022728B

3 Installation of Indoor Unit Main Body and Suction Chamber

- Install the indoor unit main body and suction chamber.
  At the time of installation, perform the engineering work according to the installation manual attached to the indoor unit main body. (For the installation height, refer to the figure to the right.)
- When mounting the suction chamber to the existing indoor unit main body, change the installation height of the indoor unit main body to height A in the figure to the right.

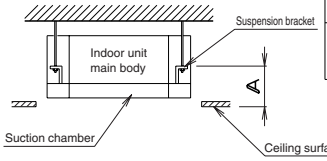

	A (mm)
BYCP125K-W1 BYCP125K-WS	185

4 Mounting of Connecting Chamber and Connection of Flexible Duct

Mount the connecting chamber. (1 piece each for left and right, a total of 2 pieces) Figure 7

(1) Press the square hole area of the connecting chamber 2 (3) into the hook section (tab) of the suction chamber 1. (2 positions)

(2) Using the supplied screws 6, fix the connecting chamber. (2 positions)

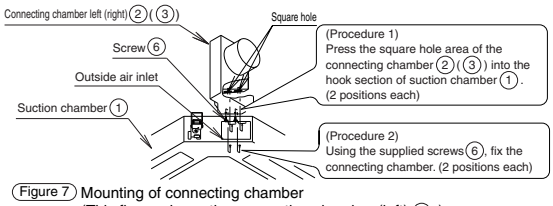

Figure 7 Mounting of connecting chamber
(This figure shows the connecting chamber (left) 2.)

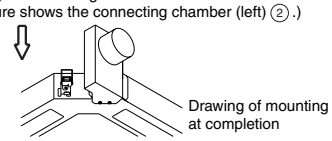

<How to Tight Sealing Pad>

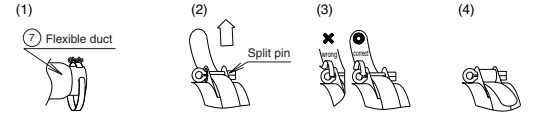

(1) Wrap the sealing pad to the position to be tightened.

(2) Insert the tip of the band through the gap of the split pin, then lightly tighten by hand.

(3) Using a standard tool (driver, pliers, etc.), turn the split pin to the direction shown in the figure to tighten the band.

(4) This completes the mounting.

Precautions

Because the split pin has a structure to prevent counter rotation, be careful with the turning direction. (When a counter rotation is forced, the ratchet will be damaged, and the tightening force will be weakened.)

In case of KDDP55B160K

(3) Connect the connecting chamber and T joint. Figure 8
Mount the flexible duct 11 with the sealing pad 12.

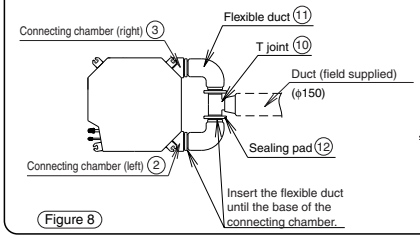

Figure 8

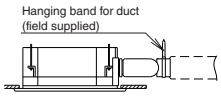

To prevent applying weight to the connecting chamber, hang the T joint using the hanging band for the duct.

(4) Mount the supplied installation pattern paper to the indoor unit by using screws to cure the indoor unit.
(Refer to the installation manual of the indoor unit main body.)
(Refer to the figure below.)
(Mounting of installation pattern paper)

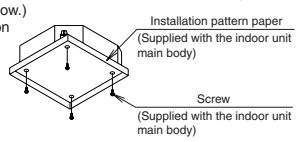

- Complete all the refrigerant and drain piping works for the indoor unit main body.

5 Duct Connection <<Duct: Nominal diameter ϕ150>>

(1) Connect the duct to the duct connection area.
(2) Wrap the connection area with vinyl tape, etc., (field supply) to prevent an air leak.

Precautions

- For the duct, be sure to apply the insulation treatment to prevent condensation.
- Do not perform duct manipulations described in the figure to the right.
- Beware that, in accordance with the local law, there may be cases where the use of a nonflammable duct is compulsory.
- When a duct goes through fire protection areas including a fire proof structure, beware that, in accordance with the local law, it may be required to establish a damper or to build a structure that is not detrimental to fire protection.
- When penetrating a wooden construction wall with a metal duct, apply electrical insulation to the duct and wall.
- Mount the outside duct so that it has a downslope toward the outside, and prevent rainwater from leaking in with a hood, etc. (Gradient of 1/100 to 1/50)
- To prevent the intrusion of small animals, such as birds, and bugs, be sure to attach a netting to sections open to outside air.
- To protect the heat exchanger of the indoor unit, be sure to attach an air filter to sections open to outside air.

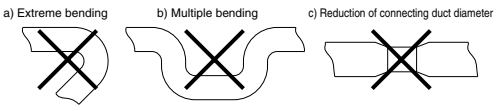

6 Mounting of Decoration Panel and Suction Chamber

- After temporarily hooking the decoration panel, pass the swing motor lead wire, which is coming out from the decoration panel, through the wiring hole of the suction chamber.
  <Round flow> 1 swing motor lead wire
  However, when used in combination with the air purifier unit or streamer deodorization unit, perform wiring without routing through the wiring hole.
- Mount the decoration panel according to the installation manual attached to the decoration panel. (When you remove the el. compo. box lid, remove the partition plate 14 as well.)

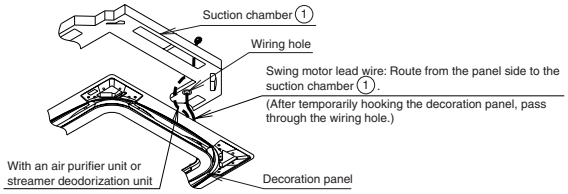

- After wiring leads, put the partition plate 14 and the el. compo. box lid in position.
  Be careful not to pull in the lead wire when putting them in position.
  Install the sensor assembly in the same way as described in 2 Mounting of Sensor…Chamber <Mounting of sensor assembly> (7).

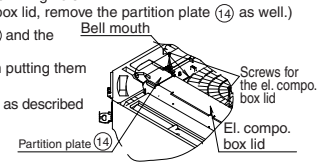

With wireless unit

- For details on connection method, refer to the installation manual attached to the wireless remote control kit (sold separately).

JC: 3K022964A

KDDP55B160 (without T joint, without fan)

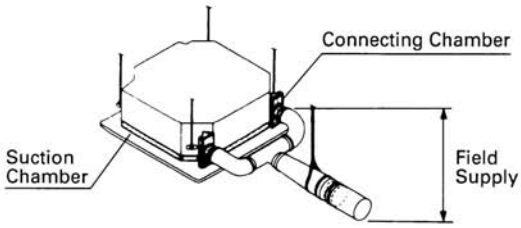

Note:
1. As the principle, the duct fan is unnecessary for 4 meters or less. When needing enough fresh air taking-in, use Kit with Duct Fan of optional, which is shown in the following.
2. The other part of Fresh air intake kit (Duct, T Joint, Air Filter, Hood, etc) is field supplied.
3. In wireless remote controller use, Flexible Duct in the right can not connect.

• Specifications

Item \ Model	KDDP55B160
Method of fresh air intake	Fresh air intake by the indoor unit fan
Size of connecting duct	ϕ150

• Example of Installation

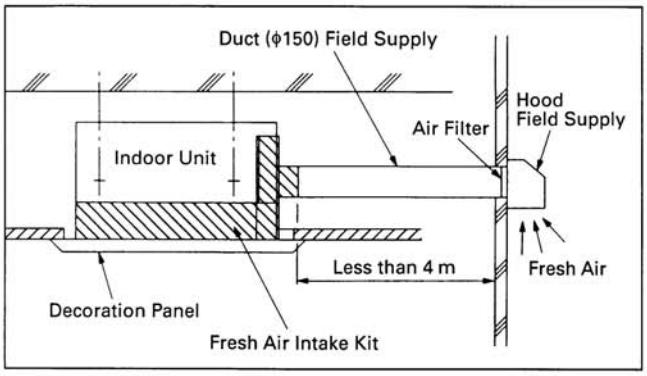

KDDP55B160K (with T joint, without fan)

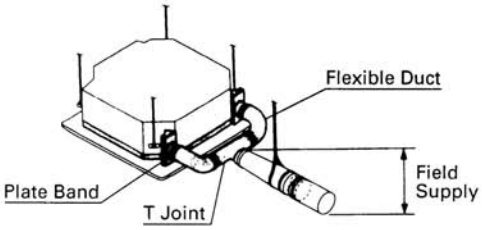

Note:
1. As the principle, the duct fan is unnecessary for 4 meters or less. When needing enough fresh air taking-in, use Kit with Duct Fan of optional, which is shown in the following.
2. The other part of Fresh air intake kit (Duct, T Joint, Air Filter, Hood, etc) is field supplied.
3. It isn't possible to do simultaneous use with wireless remote controller.

• Specifications

Item \ Model	KDDP55B160K
Method of fresh air intake	Fresh air intake by the indoor unit fan
Size of connecting duct	ϕ150

• Example of Installation

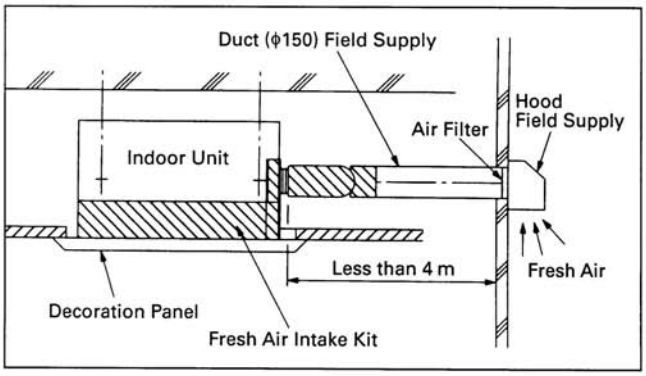

2.7 KDD55DA160(K) — Fresh Air Intake Kit (Chamber Type)

KDD55DA160 (without T-shape, without Fan)

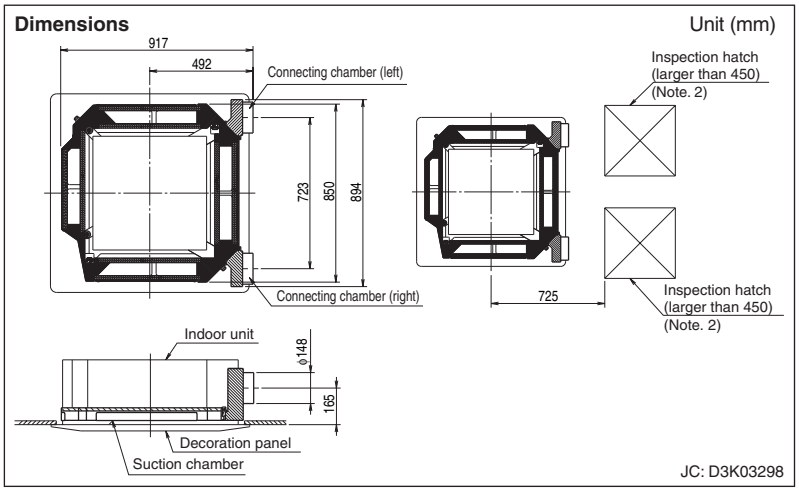

Caution
1. An inspection batch is required when inserting this kit (Required for maintenance of the kit.)
2. Mount one or the other of the inspection hatch.
3. This should be assembled locally.
4. If there is any obstacle to make air intake from both sides hard, air intake from one side will be enabled.
5. If the light receiver unit for the remote controller is mounted to the main unit, air should be taken in from the right side.

Item / Model		KDD55DA160
Fresh air intake method		Fresh air intake by air conditioning fan.
Diameter of connection duct		ϕ150
Accessories		T pipe joint: 1. Flexible duct: 2. Plate bands: 4. Mounting screws (M4×12) : 4. Installation manual.
Mass	kg	4.5

KDD55DA160K (with T-shape, without Fan)

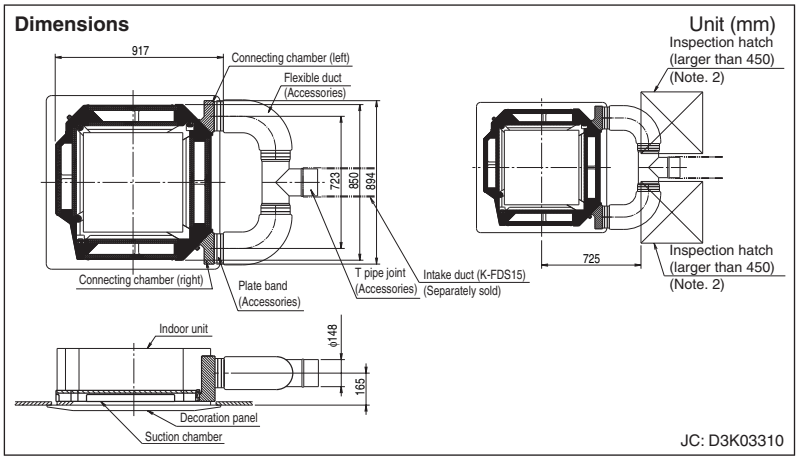

Caution
1. Maximum length of the duct is 4 m.
2. An inspection hatch is required when inserting this kit. (Required for maintenance of the kit.)
3. Mount one or the other of the inspection hatch.
4. This should be assembled locally.
5. This kit is designed for intake from both sides. If one side is blocked requiring intake from only one side, use KDD55DA160.
6. This kit cannot be used when the receiver for the wireless remote control is attached as it blocks intake from one side.

Item / Model		KDD55DA160K
Fresh air intake method		Fresh air intake by air conditioning fan.
Diameter of connection duct		ϕ150
Accessories		T pipe joint: 1. Flexible duct: 2. Plate bands: 4. Mounting screws (M4×12) : 4. Installation manual.
Mass	kg	6.5

Installation Manual

⚠Caution Before starting the installation work, carefully read the following, safety precautions and observe them to ensure safety during work.

- Make sure to use the attached or specified components to install the products. Otherwise, it may cause air leak or the product may fall.
- After installation, check whether there is no abnomality during the trial operation.

REMARKS

- This kit can be installed to the Ceiling Mounted Cassette Type Air Conditioner<Multi-flow type>.
- Before installation, make sure the indoor unit number.
- Refer to the installation manuals for the indoor unit and the decoration panel.

Kit name	Indoor unit model that party crowded is possible	
KDD55DA160 KDD55DA160K	SkyAir	FHC18-48NUV1, FHC30/36/42PUV2S, FHC18/24/48NUV2S, FHC21KV2S, FHC71DV2S, FHC35-60KVE, FHYC35-140KVE
	VRV	FXF25-125LVE

Components Check if the following parts are included with your kit.
Shaded part ▭ is separately packed.

Name		①Suction Chamber	②Connecting Chamber (Right)	③Connecting Chamber (Left)	④Screw	⑤Closing Material	⑥T Joint	⑦Flexible Duct	⑧Clamp	⑨Installation Manual
Shape		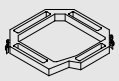			M4×12					
Q'ty	KDD55DA160	1 PC.	1 PC.	1 PC.	4 PCS.	1 PC.	——	——	——	1 PC.
	KDD55DA160K	1 PC.	1 PC.	1 PC.	4 PCS.	——	1 PC.	2 PCS.	4 PCS.	1 PC.

❶ Selection of Location and Access Door

1. Referto the following table.

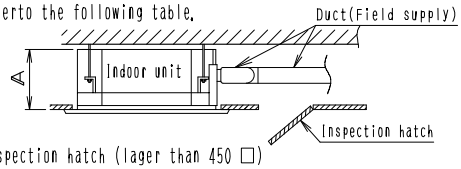

2. Inspection hatch (lager than 450 □)

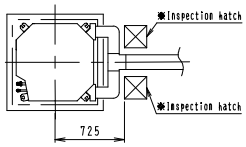

Indoor unit		A
SkyAir	FHC35-60KVE, FHYC35-71KVE, FHC18-26NUV1, FHC18NUV2S, FHC21KV2S	290
VRV	FXF25-80LVE	306
SkyAir	FHYC100-140KVE, FHC30-48NUV1, FHC30/36/42PUV2S, FHC24/48NUV2S, FHC71DV2S	348
VRV	FXF100/125LVE	

※ Install either one of hatches

In case of KDD55DA160

- When the intake from both sides can not be obtained due to an obstacle, one side intake is acceptable.
  In this case, make sure to close the opening with the closing material⑤.
- In case of one side intake, the noise will be larger than intake from both sides.
  (Example of one side intake)

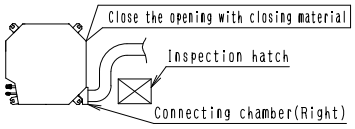

※When installing the wireless receiver kit on the indoor unit, the duct must be led from right side as shwn. In this case, use KDDP55D160 or KDD55DA160.

❷ Installation of the Suction chamber

1. Remove the decoration panel. (This is not required for the new installtion)
   - Remove the decoration panel in the reverse step when the panel is installed.
     (Refer to the installation manual of the decoration panel for the detais.)
2. Temporarily install the suction chamber to the indoor unit by hanging the lutch on the opposite side of the suction chamber to the hook of the indoor unit body. (2 portions)
   Temporarily hang the remaining 2 hooks of the suction chamber to the hooks on the sides of the indoor unit. (fig.1) ~ (fig.3)
   (When the indoor unit is already installed, hang the hook to the suspennsion bracket temporarily and fix the hook.)
   ※Installation set outline of the indoor unit (fig.2)
3. Tighten 2hexahead screws located beneath the lutches until the thickness of the sealing material of chamber reduces to 5~8mm. (fig.4) (fig.5)

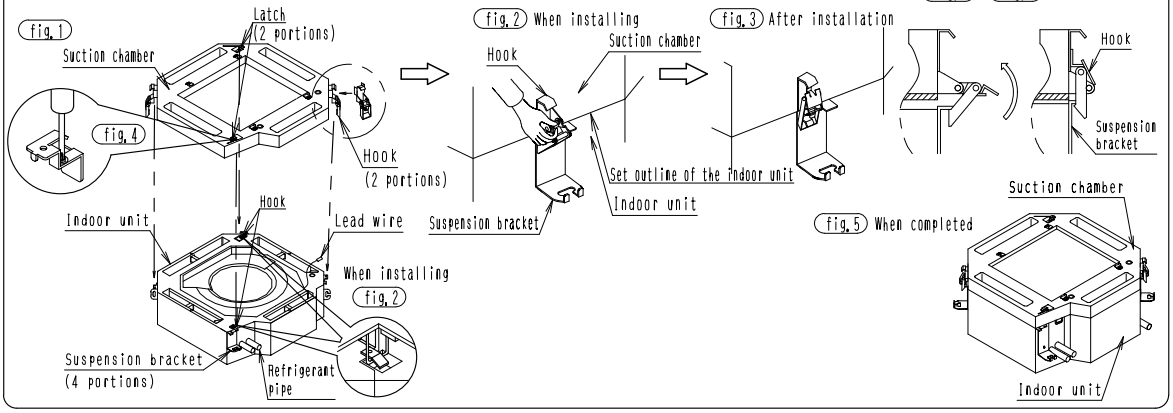

C: 3K011144A

❸ Installation of the Indoor Unit and the Suction Chamber

- Install the indoor unit and the suction chamber.
  Refer to the installation manual of the indoor unit.
  (For the height of the unit, refer to the drawing on the right.)
- Be complete installated refrigerant piping, and drain piping.
- Attach the paper pattern for installation to the indoor unit with screws to protect the indoor unit from dirt. [See below]
  (When the indoor unit is newly installed)
  (See below)
- In case of attaching the chamber after installed indoor unit.
  For the height of the unit, change the height shown on the right drawing.

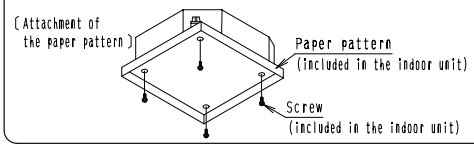

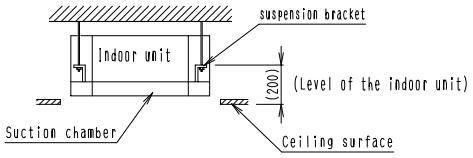

❹ Installation of Connecting duct

1. Install the Connecting chamber(right & left)in accordance with the procedure shown in fig.5.

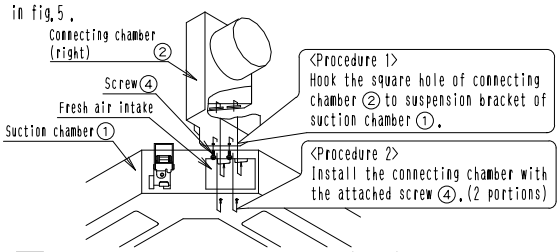

fig.5 Installation of the connecting chamber(right)
(Same as the left side)

<How to tighten the clamp>

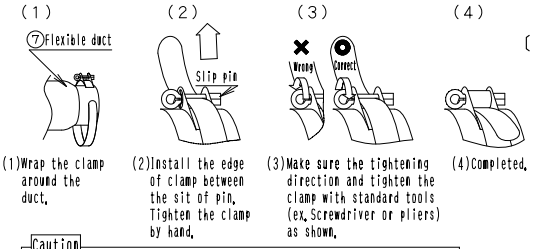

Caution
Do not turn the slit pin reversely.
If turned reversely, ratchet part many break down.

In case of KDDP55D160K

2. Connect the T Joint and Connecting chamber. fig.6

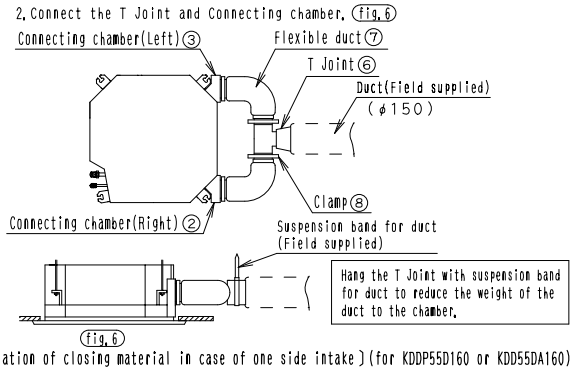

fig.6

[Installation of closing material in case of one side intake] (for KDDP55D160 or KDD55DA160)

- Install the closing material in accordance with the following procedures. fig.7
  Closing material can be used either right or left side opening.

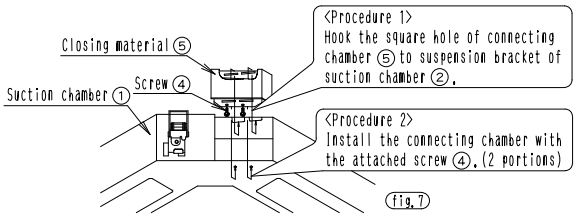

fig.7

❺ Duct connection 《Duct:diameter φ150》

1) Attach the duct to the outside of the Branch duct chamber.
   - Wrap the duct tape(Field supplied)around the connection to prenent air leak.
   - Insulate the duct to prevent condensate.
2) Do not perform the following duct work.

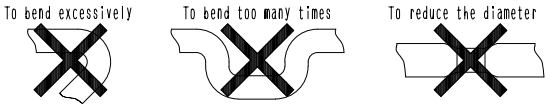

Caution
- follow the local code or regulation to install the duct.
- In case that metal duct is penetrated through wooden wall, make sure the duct and the wall are electrically insulated.
- Install the outdoor unit duct inclined downwardly so that the rain will not get into the duct. (Inclination 1/100 to 1/50)
- Where it contact the outside air, make sure to install screen to avoid birds, small animals or insects getting inside the duct.
- Where it contact the outside air, make sure to install air filter to protect heat exchanger for indoor unit.

❻ Installation of Decoration panel

- Install the Decoration panel in accordance with the installation manual attached to the decoration panel.

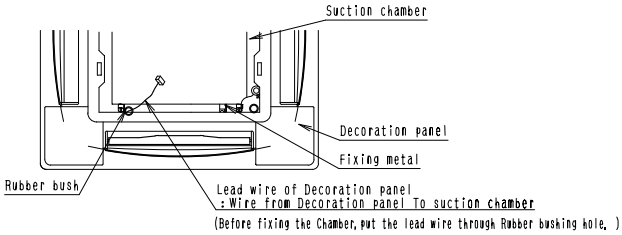

In case of the panel for Wireless remote controller

- Put the Connector for receiver lead wire through rubber bush and connect to the indoor PC board.
- Refer to the installation manual attached to the Wireless remote controller kit(optional)for the detail.

3K011144A

KDD55DA160 (Without T Joint, without Duct Fan)

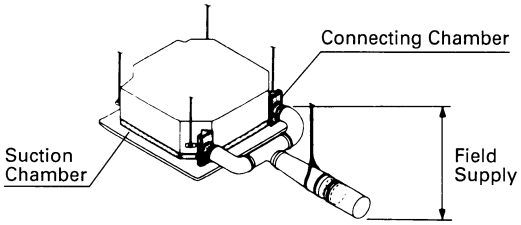

Note:
1. As the principle, the duct fan is unnecessary for 4 meters or less. When needing enough fresh air taking-in, use Kit with Duct Fan of optional, which is shown in the following.
2. The other part of Fresh air intake kit (Duct, T Joint, Air Filter, Hood, etc) is field supplied.
3. In wireless remote controller use, Flexible Duct in the right can not connect.

- **Specifications**

Item \ Model	KDD55DA160
Method of Fresh Air Intake	Fresh Air Intake by The Indoor Unit Fan
Size of Connecting Duct	ϕ150

- **Example of Installation**

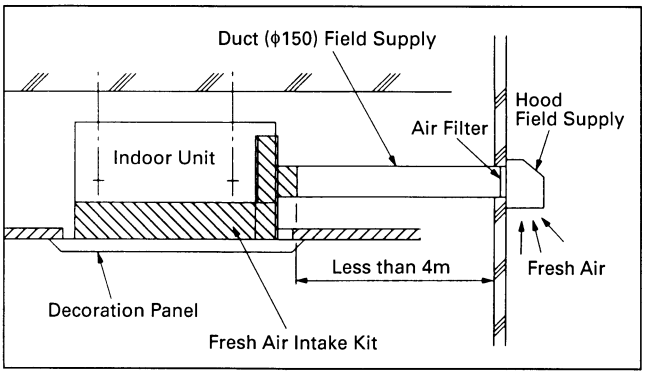

KDDP55DA160K (With T Joint, without Duct Fan)

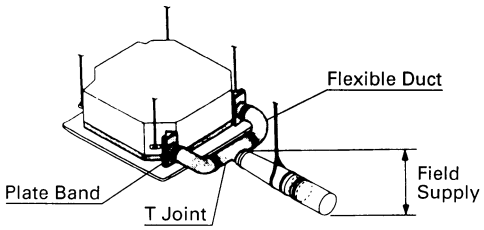

Note:
1. As the principle, the duct fan is unnecessary for 4 meters or less. When needing enough fresh air taking-in, use Kit with Duct Fan of optional, which is shown in the following.
2. The other part of Fresh air intake kit (Duct, T Joint, Air Filter, Hood, etc) is field supplied.
3. It isn't possible to do simultaneous use with wireless remote controller.

- **Specifications**

Item \ Model	KDD55DA160K
Method of Fresh Air Intake	Fresh Air Intake by The Indoor Unit Fan
Size of Connecting Duct	ϕ150

- **Example of Installation**

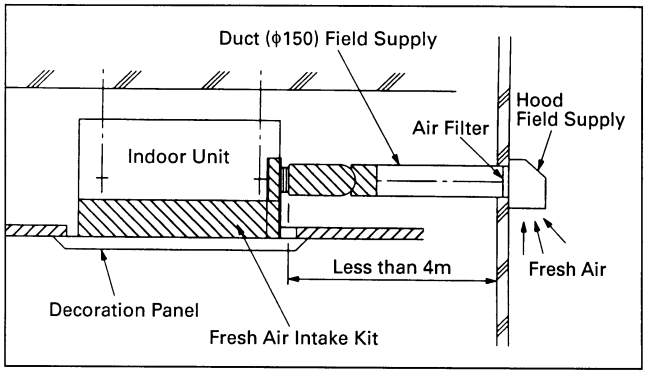

2.8 KDDP55X160 — Fresh Air Intake Kit (Direct Installation Type)

KDDP55X160

Model / Item	KDDP55X160
Material	Hot-dip zinc-coated carbon steel sheet
Diameter of connection duct	ϕ100
Accessories	Insulation material retainer plate : 1 Insulation material : 1 set Mounting screws : 4 Installation manual.

Dimensions Unit (mm)

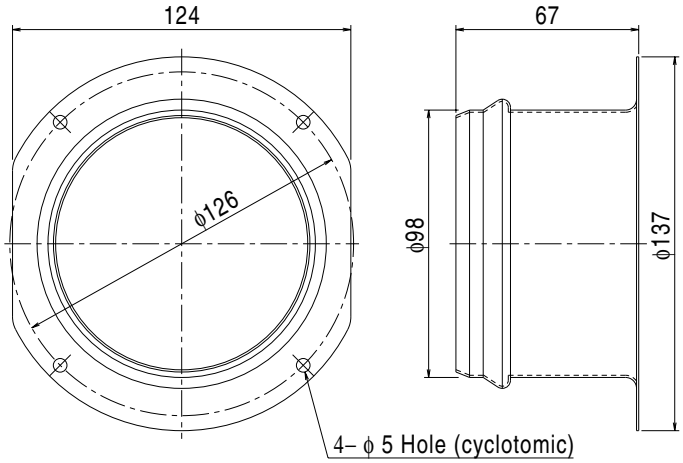

J: D3K04240A

Installation Manual

Precautions

- This kit can be mounted to a ceiling mounted cassette-type air conditioner.
- When using this kit, a duct (nominal diameter: ϕ100) is required separately.

- Beware that, in accordance with the local law, there may be cases where the use of a nonflammable duct is compulsory.
- When a duct goes through fire protection areas including a fire proof structure, beware that, in accordance with the local law, it may be required to establish a damper or to build a structure that is not detrimental to fire protection.
- When penetrating a wooden construction wall with a metal duct, apply electrical insulation to the duct and wall.
- Mount the outside duct so that it has a downslope toward the outside, and prevent rainwater from leaking in. (Gradient of 1/100 to 1/50)
- To prevent the intrusion of small animals, such as birds, and bugs, be sure to attach a netting to sections open to outside air.

Parts content Check the following parts.

Name	① Duct flange	② Mounting screws	③ Duct flange insulator	④ Main body opening insulator	⑤ Sealing pad retainer	⑥ Installation manual
Number of pieces	1	4	1	1	1	1
Shape		M4×12				

Tools needed for mounting Phillips-type screwdriver, nippers, and cutter, etc.

1 Mounting of Duct Flange

1) Cut off the side plate of the indoor unit main body along the dowel hole without damaging the internal insulator. (Figure 1)

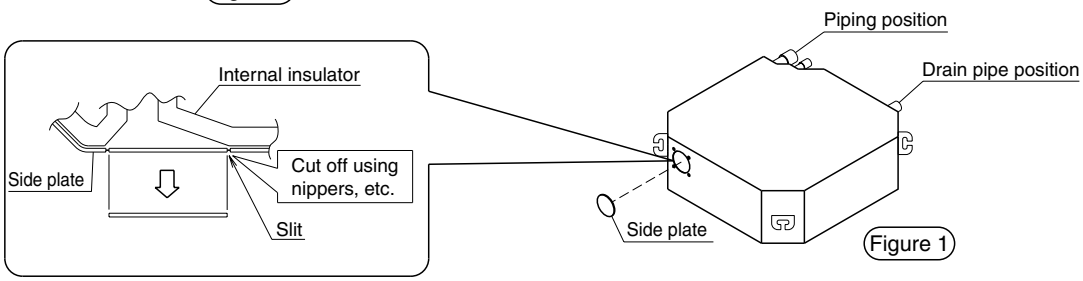

Figure 1

2) Stick the main body's opening insulator ④ to the opening. (Figure 2)

Figure 2

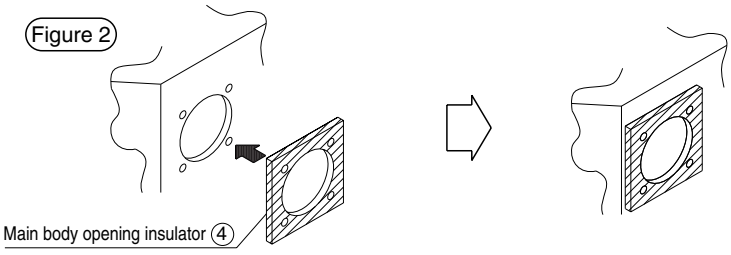

JC: 2P137676B

3) After mounting the duct flange ① to the opening using the mounting screws ② (M4×12, 4 pieces), stick the duct flange insulator ③. (Figure 3)

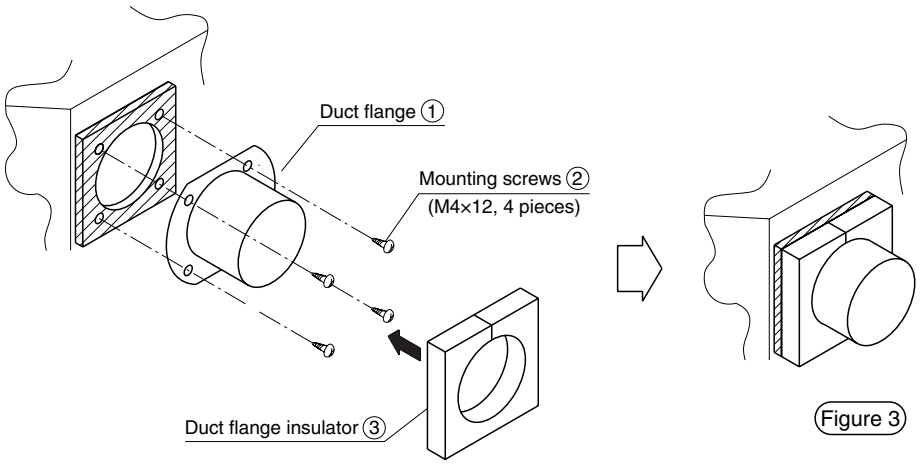

Figure 3

4) Before mounting the decoration panel, remove the insulator, and stick the sealing pad retainer ⑤ to the indoor unit drain pan. (Figure 4)

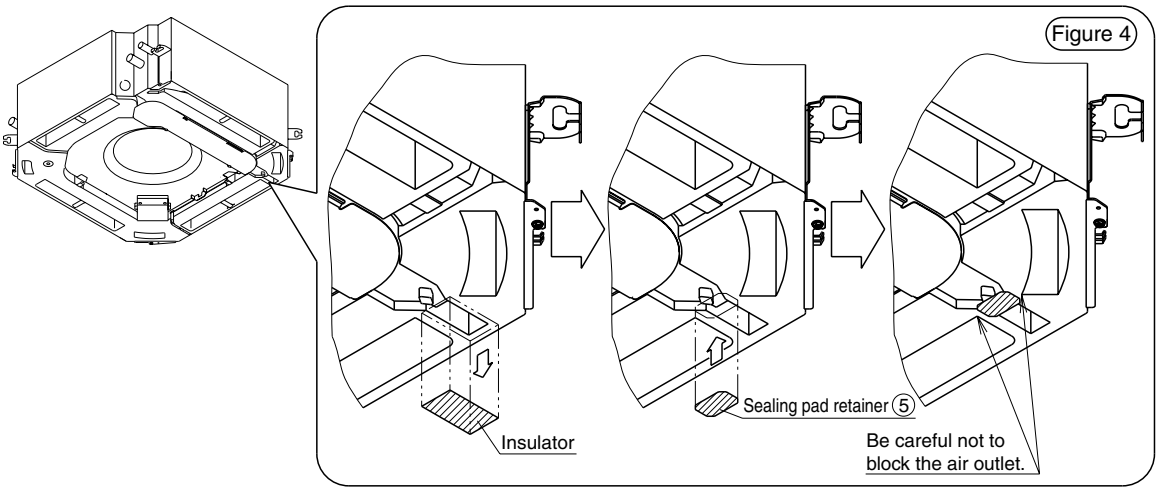

Figure 4

❷ Duct Connection ⟨⟨Duct: Nominal diameter ϕ100⟩⟩

1) Connect the duct to the outside of the duct flange. (Figure 5)
2) After the connection, wrap the connection area with tape (field supplied) to prevent an air leak.

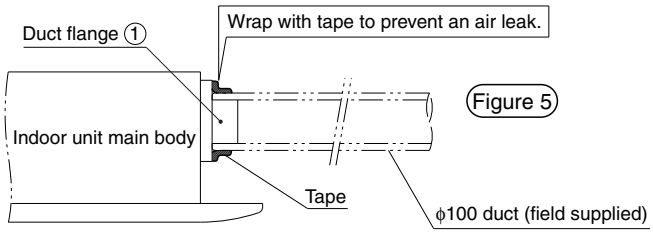

Figure 5

Precautions

- Perform insulation for all ducts.
- Do not perform duct manipulations shown to the right.

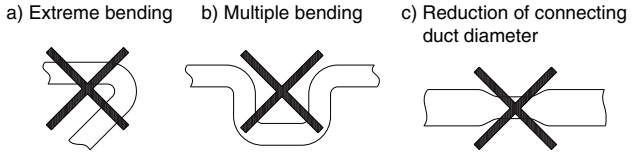

J: 2P137676B

2.9 KDDJ55XA160 — Fresh Air Intake Kit (Direct Installation Type)

KDDJ55XA160

Model / Item	KDDJ55XA160
Material	Hot-dip zinc-coated carbon steel sheet
Diameter of connection duct	ϕ75
Accessories	Insulation material : 1 set Mounting screws : 4 Installation manual.

Dimensions Unit (mm)

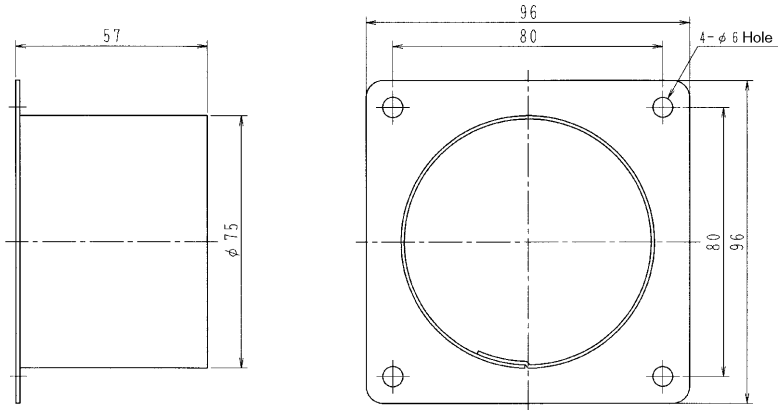

JC: D3K2175

Installation Manual

Remarks:

1. This kit can be installed to the Ceiling mounted cassette type (Multi-flow).
2. When installing this kit, duct(Nominal dia. : ϕ75)is required on site.

- In case that metal duct is penetrated through wooden walls, make sure the duct and the wall electrically insulated.
- Install the duct inclined downwardly to outdoor so that the rain may not get into the duct. (Inclination 1/100 to 1/50)
- To avoid birds, small animals or insects getting inside the duct, make sure to install net where it contacts the outside air.

Contents

Prior to installation, make sure you have the complete kit of parts.

Name	①Duct Flange	② Screws	③Insulation for Duct Flange	④Insulation for Opening of Unit	⑤ Installation Manual
Q'ty	1 piece	4 pieces	1 piece	1 piece	1 piece
Shape		M4×12			

Necessary tools

Philips head screw driver, nipper, cutter etc.

❶ Installation procedures of Duct flange

The method of installation varies with indoor unit type.
The unit type can be distinguished by the position of knockout hole.

1. Cut off the knockout hole on the side plate. (Fig. 1)

Unit type 1	Unit type 2
The knockout hole is opposite to drain pipe.	The knockout hole is opposite to ref. pipe.

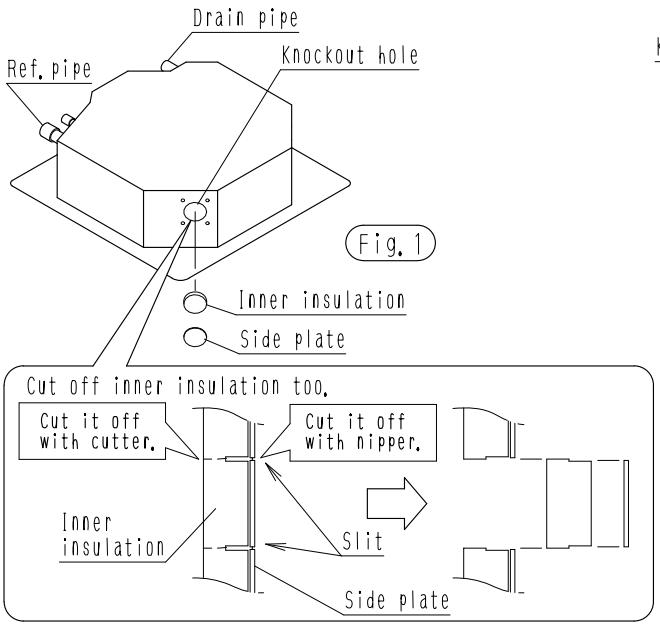

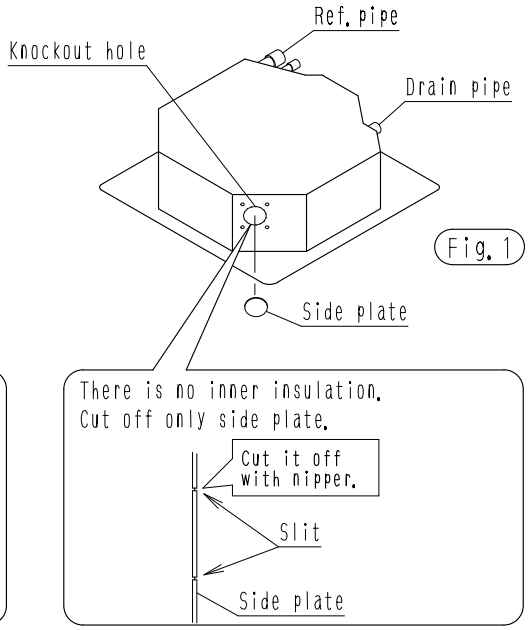

2P066796C

2. Adhere the insulation④ for opening of unit to the opening. (Fig. 2)

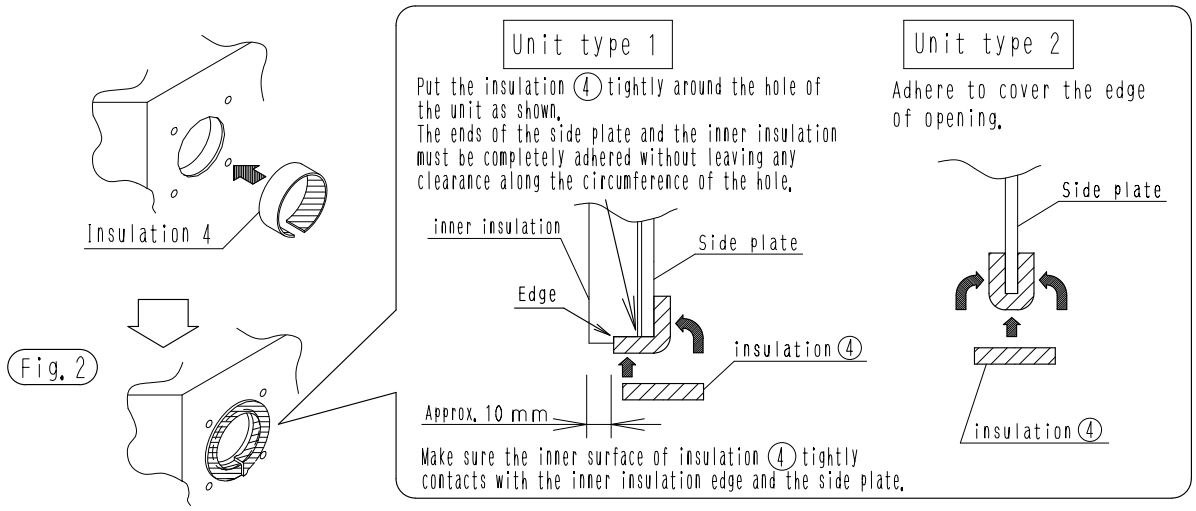

3. Install the duct flange①with screws②(M4×12, 4 screws)to the opening and adhere the insulation③(Fig. 3)

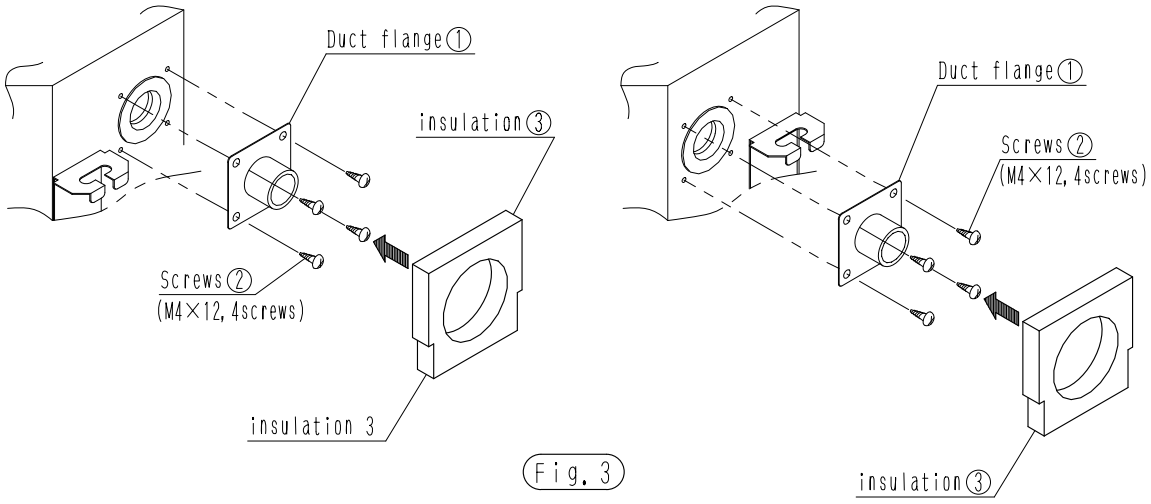

Fig. 3

❷ Installation procedures of Duct <Nominal diameter of duct: φ75>

1. Connect the duct to the duct flange. (Flange fits inside the duct.>(Fig. 4)
2. After connection, wrap vinyl tape (field supply)around the duct connection to prevent air leak.

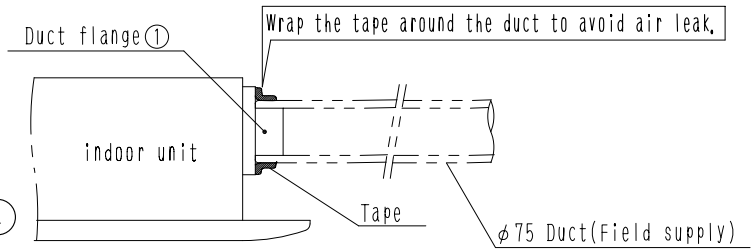

Fig. 4

Precaution
- ALL ducts must be completely insulated.
- Do not do the followings when installing duct.

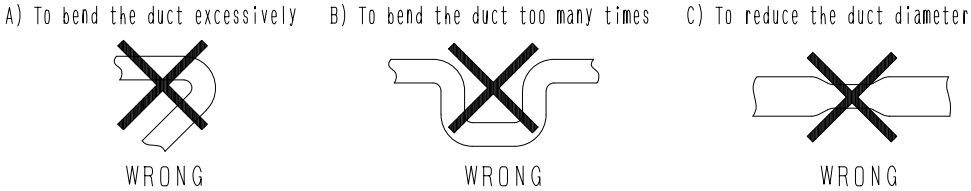

2P066796C

2.10 KKSJ55KA160 — Chamber Connection Kit

KKSJ55KA160

Dimensions Unit (mm)

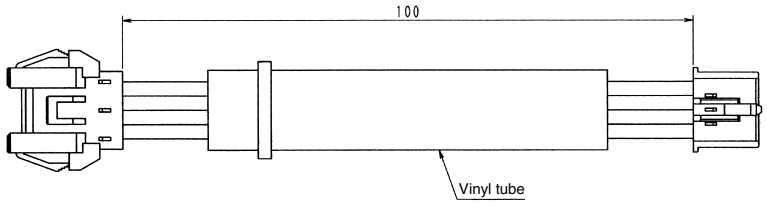

J: D3K2186

3

Installation Manual

Daikin Air Conditioners Chamber Connection Kit Installation manual

KKSJ55K160 • KKSJ55KA160 Caution : Before installation, read this safety instruction.

Combining with option accessories (chamber-type)

- This chamber connection kit is for use with the multi-flow set. Refer to the catalog, etc. for details on the separately sold items (chamber-type) to be connected.
- Refer to the table at right for combinations of this kit and other option accessories(chamber-type). Also, be sure to install the fresh air intake (chamber-type) kit above.

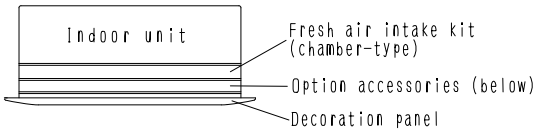

	Option accessories (chamber-type)	Above: Fresh air intake kit
below	Air purification unit	○
below	High Effciency filter unit	○
below	Ultra-long life filter unit	○
below	Fresh air intake kit	

Combinations not listed in this table should not be attempted as they will cause malfunctions.

Contents of parts

Check the following parts

Name	Relay harness	Clamping material	Others
Shape	①	②	This Installation Manual
Quantity	1 PC.	2 PCS.	

Installation of the Chamber connection kit. Refer to the installation (attachment) manuals included with the indoor unit, the option accessories (chamber-type), and Decoration panel for details on installation (attachment).

Caution Extend the Decoration panel 's swing motor lead wire using the included relay harness ① and connect it to the indoor unit. When doing this, use the included clamping material ② to tie the lead wire so it does not droop.

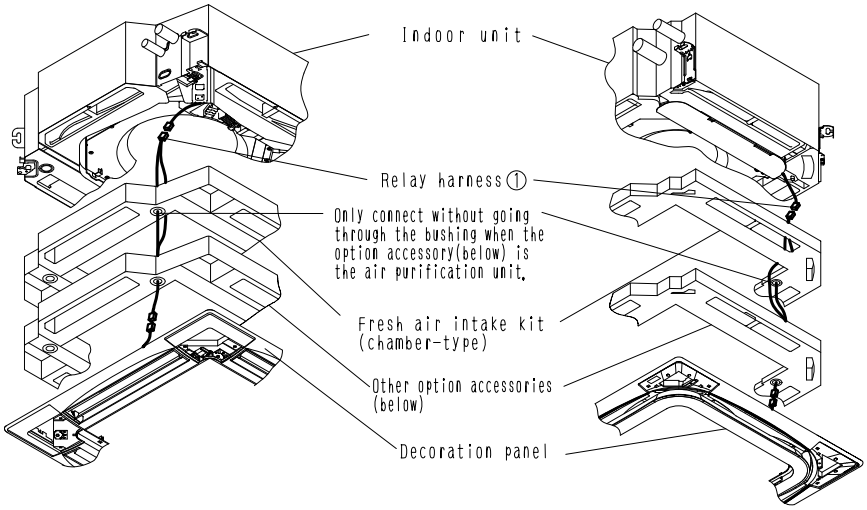

Applicable model		
	SkyAir	FHC35-60KVE, FHYC35-140KVE, FHC18-48NUV1, FHC30/36/42PUV2S, FHC18/24/48NUV2S, FHC21KV2S, FHC71DV2S
	VRV	FXF25-125LVE

Applicable model		
	SkyAir	FCQ50-140LUV1, FCQ50-140KVEA, FCQN71-140KVEA, FCQ71/100KVLT, FCQ125/140KAVLT, FCQ30-48LUV2S
	VRV	FXFQ25-125PVE

C: 3P089651D

2.11 KDTP55K80 / 160 — Insulation Kit for High Humidity

Dimensions Unit (mm)

Model	AA	AB
KDTP55K80	245	157
KDTP55K160	287	186

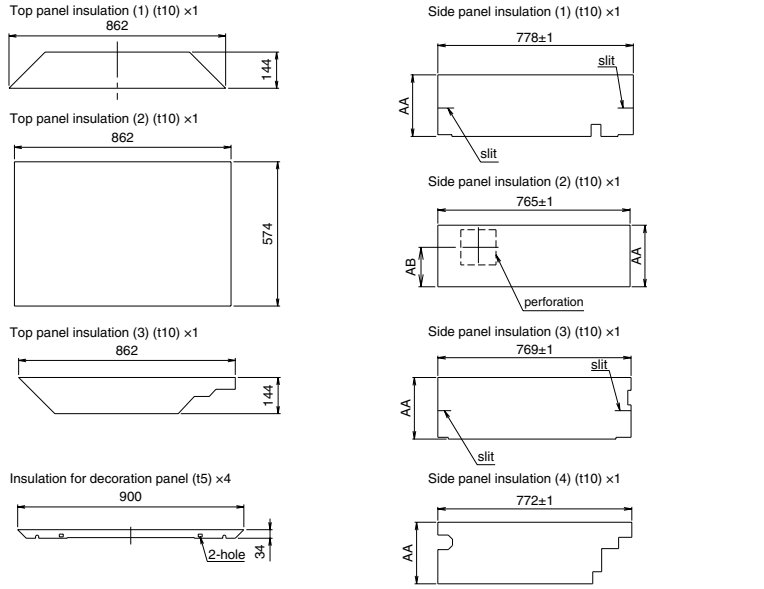

J: D3K05113

Item \ Model	KDTP55K80	KDTP55K160
Material	Polyethylene foam (with adhesive on the reverse side)	
Applicable ambient temperature	40°CDB, RH85%	
Accessories	Insulation for hanger bracket : 4 Installation manual.	

Installation Manual

Precautions

- This kit can be mounted to an ceiling mounted cassette-type air conditioner <round flow>.
- This kit cannot be used for the mounting of humidifier and branch duct.

Parts content

Check the following parts.

Name	Side insulator plate (1)	Side insulator plate (2)	Side insulator plate (3)	Side insulator plate (4)	Top insulator plate (1)
Shape	① 778mm; 80 A=245mm; 160 A=287mm; A; Slit	② 765mm; 80 A=245mm; 160 A=287mm; A	③ 769mm; 80 A=245mm; 160 A=287mm; A; Slit	④ 772mm; 80 A=245mm; 160 A=287mm; A	⑤
Number of pieces	1	1	1	1	1

Name	Top insulator plate (2)	Top insulator plate (3)	suspension bracket insulator	Panel insulator	Installation manual
Shape	⑥	⑦	⑧	⑨	⑩
Number of pieces	1	1	4	4	1 (This manual)

1 Sticking Procedure

- Perform the work on soft cloth to prevent damage to the indoor unit and panel.

<Procedure>

(1) According to the sticking procedure for the side insulator plate, stick the side insulator plates (1 to 4) in sequential order without leaving any gap in between. (Figure 1)
(When mounting the fresh air intake kit (KDDP55X160), cut off the side insulator plate (2) with a knife along the perforation. The cut-off insulator is no longer needed.)

(2) Stick the top insulator plates (1 to 3) without leaving any gap in between. Also, stick the top insulator plates without leaving any gap against the side insulator plates all the way around. (Figure 2)

(3) Hang the product.

(4) Stick the suspension bracket insulator to the suspension bracket together with the washer and bolt. (Figure 3)

(5) Lastly, stick the panel insulator to the backside of the panel. (Figure 4)

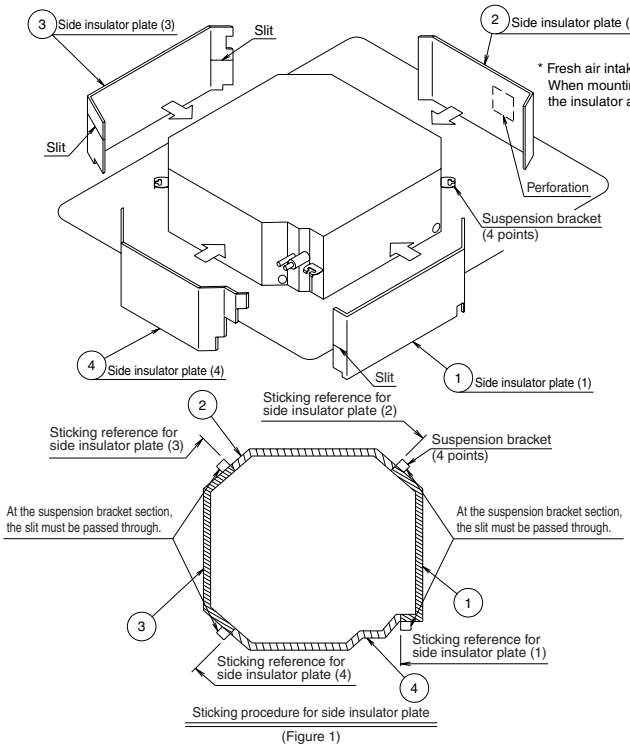

Sticking procedure for side insulator plate

(Figure 1)

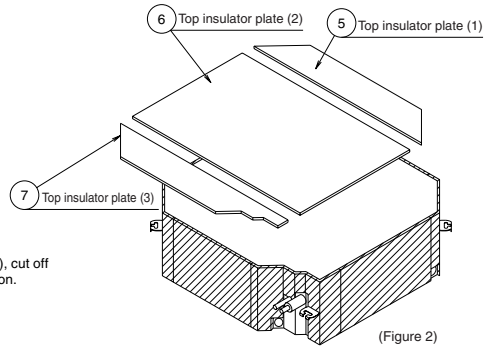

(Figure 2)

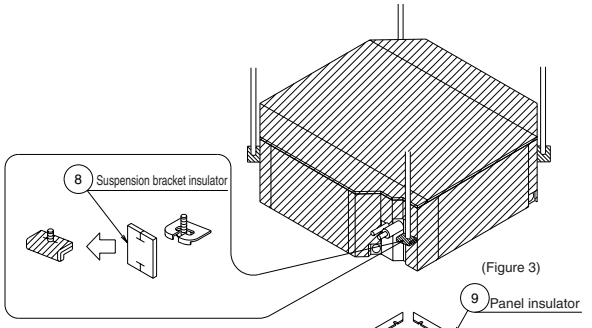

(Figure 3)

* After hanging the product, stick the suspension bracket insulator.

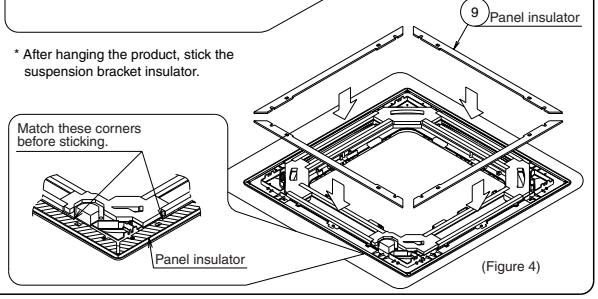

(Figure 4)

JC: 3P179341E

2.12 KDT-55DA80 / 160 — Insulation Kit for High Humidity

Dimensions Unit (mm)

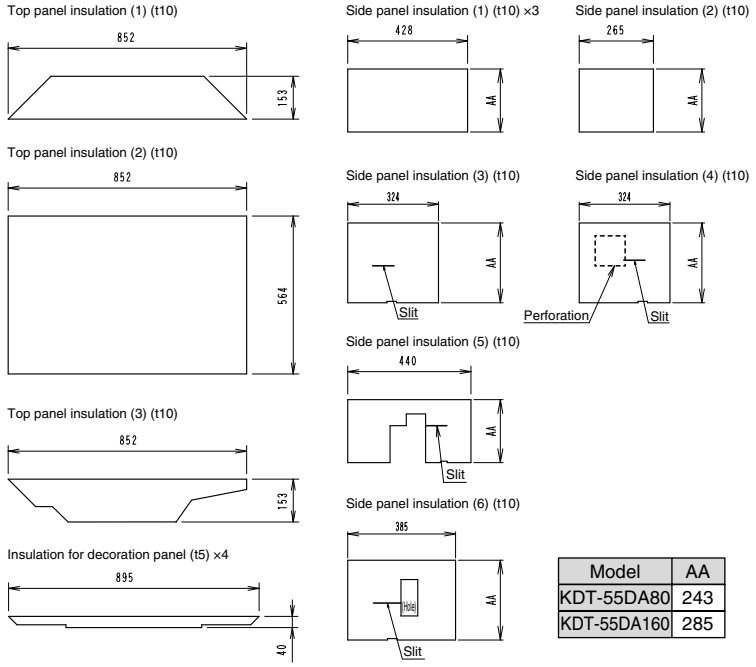

Model	AA
KDT-55DA80	243
KDT-55DA160	285

JC: D3K03297

Item \ Model	KDT-55DA80	KDT-55DA160
Material	Polyethylene foam (with adhesive on the reverse side)	
Accessories	Insulation for hanger bracket: 4 Installation manual.	

Installation Manual

Caution

- This kit can be installed to the Ceiling Mounted Cassette Type Air Conditioner <Multi-flow type>.
- Before installation, make sure the indoor unit model name.
- This kit cannot be attached to a humidifier or branch duct chamber.

Combination table

Kit name	Indoor unit model that party crowed is possible	
KDT-55DA80	*VRV*	FXF25-80LVE
KDT-55DA160	*VRV*	FXF100 / 125LVE

Contents of parts

Name	① Top plate insulation material (Top-1)	② Top plate insulation material (Top-2)	③ Top plate insulation material (Top-3)	④ Side plate insulation material (Side-1)	⑤ Side plate insulation material (Side-2)
Shape		852 / 546		slit	slit
Quantity	1	1	1	1	1

Name	⑥ Side plate insulation material (Side-3)	⑦ Side plate insulation material (Side-4)	⑧ Side plate insulation material (Side-5)	⑨ Side plate insulation material (Side-6)	⑩ Suspension bracket insulation material	⑪ Panel insulation material
Shape	Slit	(80) Slit (160) Slit	428; A; 80 A=243; 160 A=285	265; A; 80 A=243; 160 A=285		
Quantity	1	1	3	1	4	4

❶ How to attach

<Procedure>

(1) Match the slits on side plate insulation material (Side-1, -2, -3, -4) to the suspension bracket and attach to the side panel of the indoor unit. (Fig. 1)
(When installing the fresh air intake kit (KDDJ55X160 OR KDDJ55XA160), tear the side panel insulation material (Side-2) at the dotted line.)

(2) Attach the side panel insulation material (Side-5, -6) to the side panel of the indoor unit. Make sure there are no gaps between neighboring insulation materials. (Fig. 2)

(3) Attach the top panel insulation material (Top-1, -2, -3), making sure there are no gaps. (Fig. 3)

(4) Attach the Suspension bracket insulation material to the Suspension brackets. (Fig. 4)

(5) Finally, attach the panel insulation material to the rear side of the panel. (Fig. 5)

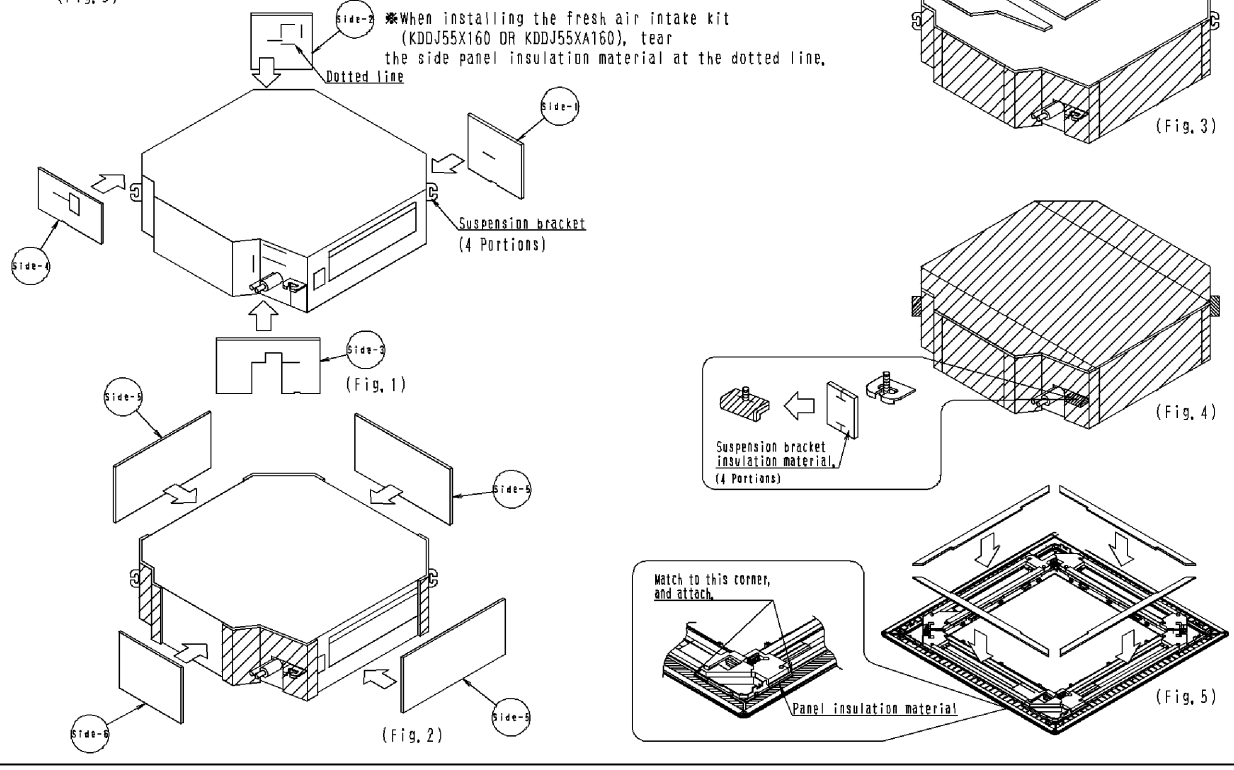

※When installing the fresh air intake kit (KDDJ55X160 OR KDDJ55XA160), tear the side panel insulation material at the dotted line.

C: 3K010927F

2.13 KAFP556B80 / 160, KAFP557B80 / 160 — High Efficiency Filter Unit

KAFP556B80 / KAFP556B160
KAFP557B80 / KAFP557B160

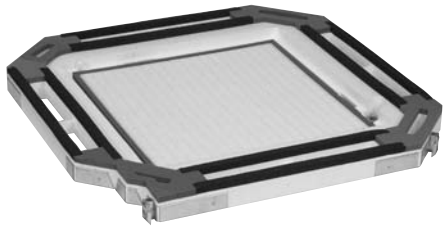

Dimensions Unit (mm)

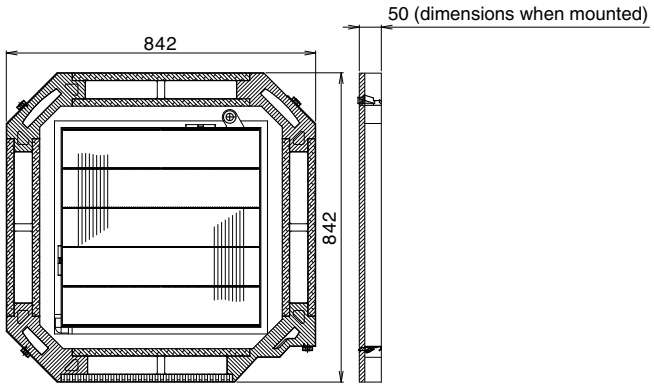

J: D3K07905
J: D3K07955

Caution

- Field setting by remote controller is necessary when the high efficiency filter is installed.

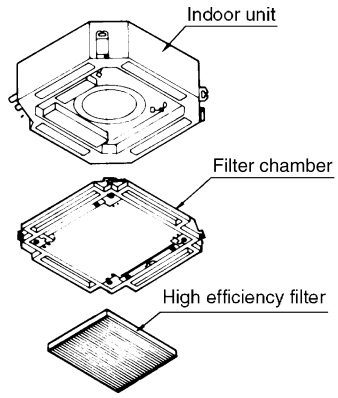

Item \ Model		KAFP556B80	KAFP556B160	KAFP557B80	KAFP557B160
Material		Galvanized sheet iron. Foam polystyrene.			
Initial pressure loss	Pa	34 or less			
Final pressure loss	Pa	98 or less			
Average efficiency	%	65 (colorimetric method)		90 (colorimetric method)	
Air flow rate	m^3/min	20	33	20	33
	l/sec	333	550	333	550
Life	h	2,500 (dust concentration 0.15 mg/m^3)		1,800 (dust concentration 0.15 mg/m^3)	
Filter element		Non-woven fabric of synthetic fiber			
Number of sheets included		1	1	1	1
Accessories		Installation manual. Sealing material: 2			
Mass	kg	3.6	4.2	3.6	4.2

Replacement filter (optional accessories)	KAFP552B80	KAFP552B160	KAFP553B80	KAFP553B160

IInstallation Manual

⚠Caution After thoroughly reading these "Safety precautions", properly perform the installation.

- For the installation parts, accessory parts and specified components must always be used.
  If the specified components are not used, the kit may fall or an air leak may occur.
- After the completion of installation, perform a test run to check that no abnormality is present.

Recommendations

- This product can be mounted to a ceiling mounted cassette-type air conditioner <round flow >.
- At the time of mounting, also refer to the installation manual of the indoor unit and to the installation manual of the decoration panel.

Parts content Check the following parts.

Name	High efficiency filter unit	Sealing pad	Installation manual
Shape	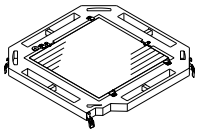		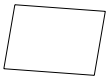
Number of pieces	1	2	1 (This document)

1 Mounting of High Efficiency Filter Unit

* When the indoor unit main body is already installed, perform the following operations, complying with precautions below.
Shut off power supply before performing the operation.
Remove the decoration panel from the indoor unit's main body.
(For details, refer to the installation manual attached to the decoration panel.)

* When the indoor unit main body is newly installed

(1) Remove the high efficiency filter from the high efficiency filter unit. (Figure 1)
(2) Mount the high efficiency filter unit to the indoor unit main body using the hooks (4 positions). (Figure 2) to (Figure 4)
For the fixing method of the hooks, refer to the figure to the right. Mount at 4 positions.

* Mount so that the contours of the indoor unit main body and chamber match. (Figure 3) (Figure 5)

(Figure 1)

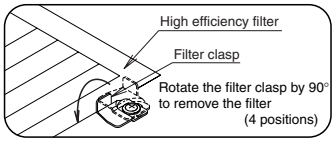

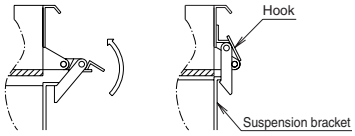

Fixing method of hooks

(Figure 2)

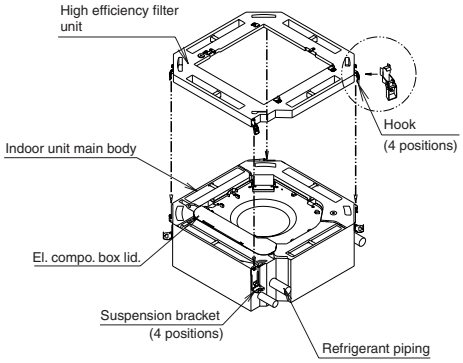

(Figure 3) Mounting status

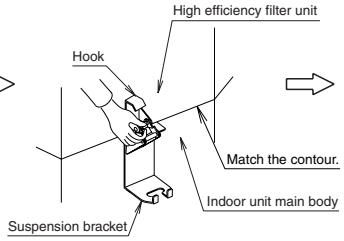

(Figure 4) Status after mounting

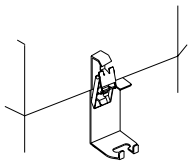

(Figure 5) Drawing of mounting at completion

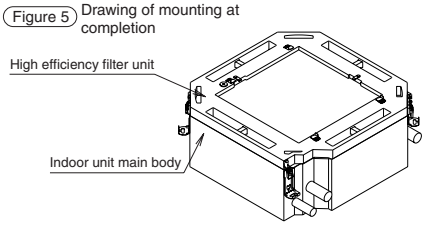

JC: 3K022806B

2 Installation of Indoor Unit Main Body and High Efficiency Filter Unit

- Install the indoor unit main body and high efficiency filter unit.
  At the time of installation, perform engineering work according to the installation manual attached to the air conditioner's main body. (For the installation height, refer to the figure to the right.)
- When mounting the high efficiency filter unit to the existing indoor unit main body, change the installation height of the indoor unit main body to height A in the figure to the right.
- Mount the supplied installation pattern paper to the indoor unit using screws to cure the indoor unit.
  (Refer to the installation manual for the indoor unit main body.)
  (Refer to the figure below.)

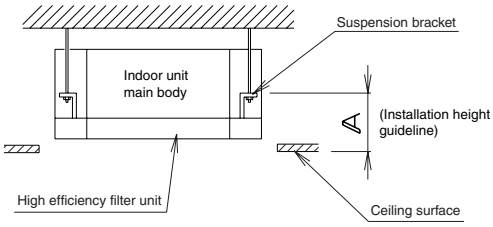

	A (mm)
BYCP125K-W1 BYCP125K-WS	185

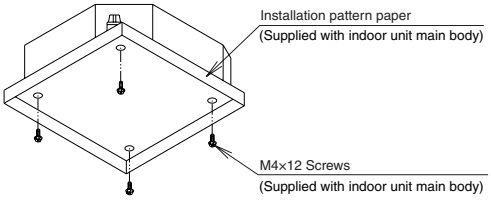

[Mounting of installation pattern paper]

- Complete all the refrigerant and drain piping work for the indoor unit main body.

3 Mounting of Decoration Panel and Mounting of High Efficiency Filter

- After temporarily hooking the decoration panel, pass the lead wire, which is coming out from the decoration panel, through the wire through hole of the high efficiency filter unit.
  <Round flow> 1 swing motor lead wire
- Mount the decoration panel according to the installation manual attached to the decoration panel.

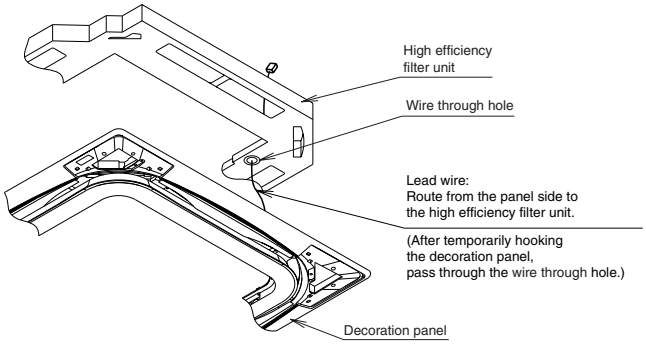

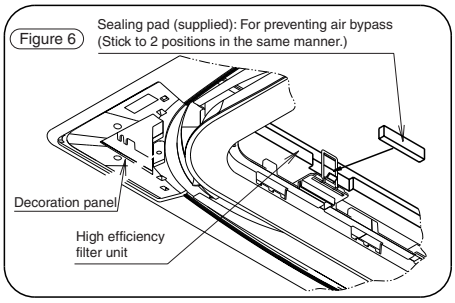

- Mounting of high efficiency filter
  After the completion of wiring and sticking of sealing pad (2 positions), mount the high efficiency filter. (Figure 6) (Figure 7)
  When you attach the high efficiency filter to the unit, do not apply too much force to the filter.

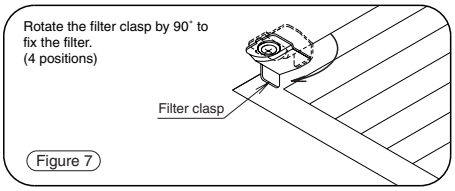

(With wireless unit)

- Route the connector of the receiver lead wire through the wire through hole, then connect the connector on the indoor PC board ass'y.
- For details on the connection method, refer to the installation manual attached to the wireless remote control kit (sold separately).

4 Preparation of Indoor Unit

- With the mounting of a high efficiency filter unit, setting the indoor unit main body is required.
  Using the field setting mode on the remote control, change the second code number as shown in the table to the right.
  For the field setting mode, refer to "How to perform field setting" attached to the remote control.

Mode No.	First code No.	Second code No.	Remarks
13 or 23	0	02	80 only
	1	02	Both 80 and 160

JC: 3K022806B

2.14 KAF556DA80 / 160, KAF557DA80 / 160 — High Efficiency Filter (Including Chamber)

KAFP556DA80

Caution

- Field setting by remote controller is necessary when the high efficiency filter is installed.

Dimensions Unit (mm)

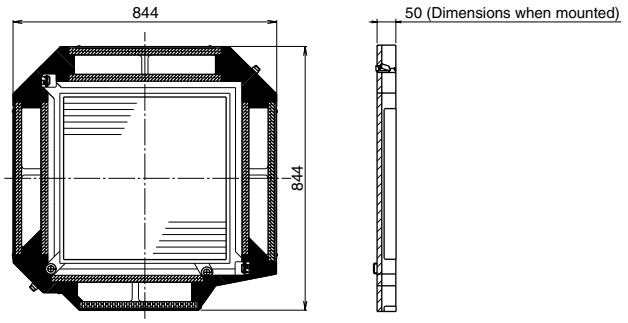

JC: D3K03295

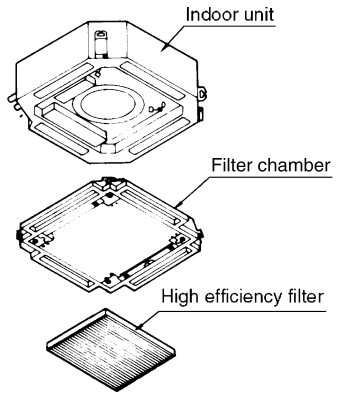

Item \ Model		KAF556DA80	KAF556DA160	KAF557DA80	KAF557DA160
Material		Galvanized sheet iron. Foam polystyrene.			
Initial pressure loss	Pa	34 or less			
Final pressure loss	Pa	98 or less			
Average efficiency	%	65 (colorimetric method)		90 (colorimetric method)	
Airflow rate	m^3/min	19	35	19	35
	l/sec	317	583	317	583
Life	h	2,500 (dust concentration 0.15 mg/m^3)		1,800 (dust concentration 0.15 mg/m^3)	
Filter element		Non-woven fabric of synthetic fiber			
Number of sheets included		1	1	1	1
Accessories		Installation manual.			
Mass	kg	3.6	4.2	3.6	4.2

Replacement filter (optional accessories)	KAFP552B80	KAFP552B160	KAFP553B80	KAFP553B160

Installation Manual

⚠Caution Before starting the installation work, carefully read the following safety precautions and observe them to ensure safety during work.

- Make sure to use the attached or specified components to install the products. Otherwise, it may cause air leak or the product may fall.
- After installation, check whether there is no abnomality during the trial operation.

REMARKS

- This kit can be installed to the Ceiling Mounted Cassette Type Air Conditioner<Multi-flow type>.
- Before installation, make sure the indoor unit model name.
- Refer to the installation manuals for the indoor unit and the decoration panel.

Components Check if following parts are included with your kit.

Name	High Effciency Filter Unit	Installation manual
Shape	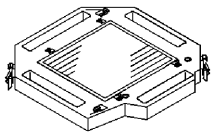	
Quantity	1 PC.	1 PC.

Combination table

Kit name		Indoor unit model that party crowed is possible
KAFP556D80 KAF556DA80 or KAFP557D80 KAF557DA80	SkyAir	FHC35-60KVE, FHYC35-71KVE FHC18-26NUV1 FHC18NUV2S FHC21KV2S
	VRV	FXF25-80LVE
KAFP556D160 KAF556DA160 or KAFP557D160 KAF557DA160	SkyAir	FHYC100-140KVE FHC30-48NUV1 FHC30/36/42PUV2S FHC24/48NUV2S
	VRV	FXF100/125LVE

1 Preparation of indoor unit

- When you instell the High Effciency Filter, the setting by the remote controller is required. Set the remote controller at the field setting mode and change the setting position number as shown on the table. Refer to the operation manual of remote controller for the field setting.

Mode No.	First Code No.	Second Code No.	Remarks
13 or 23	0	02	Only 80
	1	02	Both 80 and 160

C: 3K011145B

❷ Installation of the High Effciency filetr unit

1. Remove the decoration panel. (This is not required for the new installtion)
   - Remove the decoration panel in the reverse step when the panel is installed. (Refer to the installation manual of the decoration panel for the details.)
2. REmove the High Effciency filter. (fig. 1)
3. Temporarily install the filter chamber to the indoor unit by hanging the lutch on the opposite side of the filter chamber to the hook of the indoor unit body. (2 portions)
   Temporarily hang the remaining 2 hooks of the filter chamber to the hooks on the sides of the indoor unit. (fig. 2) ~ (fig. 4)
   (When the indoor unit is already installed, hang the hook to the suspennsion bracket temporarily and fix the hook.)
   ※Installation set outline of the indoor unit (fig. 3)
4. Tighten 2hexahead screws located beneath the lutches until the thickness of the sealing material (fig. 5) (fig. 6) of chamber reduces to 5~8mm.

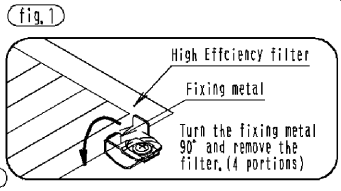

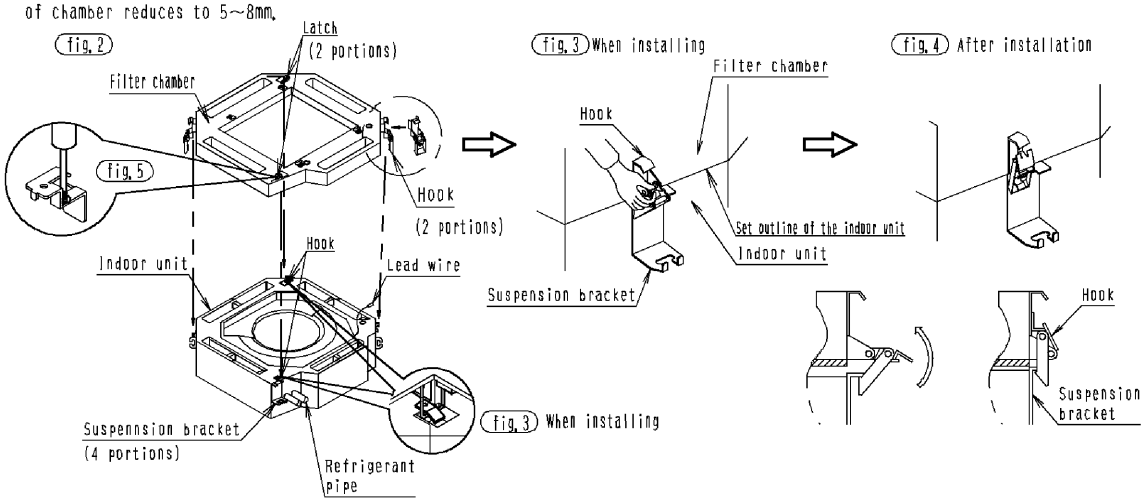

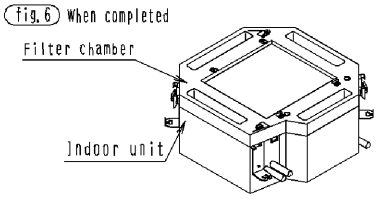

❸ Installation of the indoor unit and the High Effciency filter unit

- Install the indoor unit and the High Effciency filter unit. Refer to the installation manual of the indoor unit. (For the height of the unit, refer to the drawing on the right.)
- Be complete installated refrigerant piping, and drain piping.
- Attach the paper pattern for installation to the indoor unit with screws to protect the indoor unit from dirt. [See below] (When the indoor unit is newly installed) (See below)
- In case of attaching the chamber after installed indoor unit. For the height of the unit, change the height shown on the right drawing.

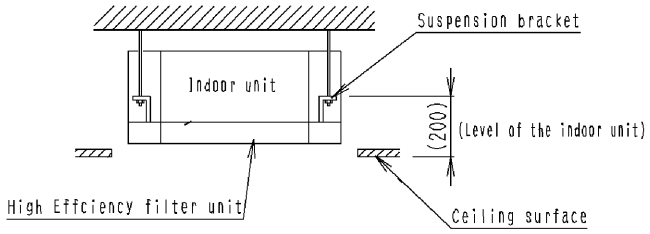

〔Attachment of the paper pattern〕

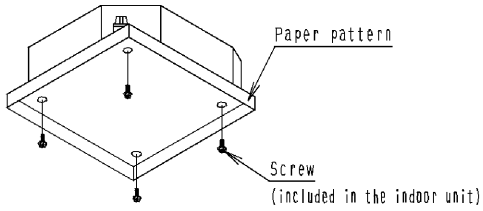

3K011145B

❹ Installation of the Decoration panel and the High Effciency filter

- Install the Decoration panel in accordance with the installation manual attached to the decoration panel.

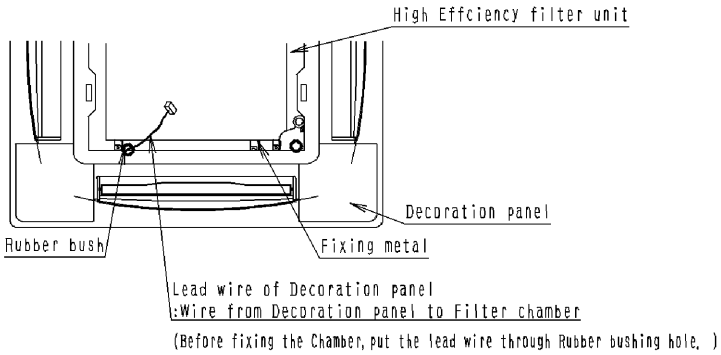

- Installation of the High Effciency filter
  After connecting, install the Filter chamber. (fig. 7)

(fig. 7)

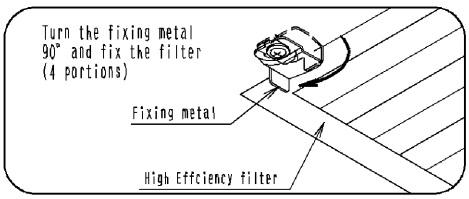

(In case of the panel for Wireless remote controller)

- Put the Connector for receiver lead wire through rubber bush and connect to the indoor PC board.
- Refer to the installation manual attached to the Wireless remote controller kit(optional)for the detail.

3K011145B

2.15 KAFP552B80 / 160, KAFP553B80 / 160 — Replacement High Efficiency Filter

Dimensions Unit (mm)

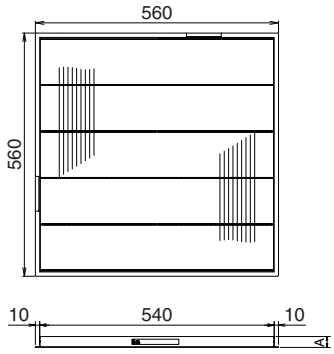

Model	A
KAFP552B80 · KAFP553B80	25
KAFP552B160 · KAFP553B160	45

J: D3K07954
J: D3K07953

Caution

- Cannot be water-washed for reuse.
- The filter chamber (KDDFP55B160 or KDDF55DA160) is required when the high efficiency filter will be installed.

Item \ Model		KAFP552B80	KAFP552B160	KAFP553B80	KAFP553B160
Initial pressure loss	Pa	34 or less			
Final pressure loss	Pa	98 or less			
Average efficiency	%	65 (colorimetric method)		90 (colorimetric method)	
Airflow rate	m^3/min	23.5	35.5	23.5	35.5
	l/sec	392	592	392	592
Life	h	2,500 (dust concentration 0.15 mg/m^3)		1,800 (dust concentration 0.15 mg/m^3)	
Filter element		Non-woven fabric of synthetic fiber			
Number of sheets included		1	1	1	1
Mass	kg	0.6	1.2	0.6	1.2

2.16 KDDFP55B160 — High Efficiency Filter Chamber

Dimensions Unit (mm)

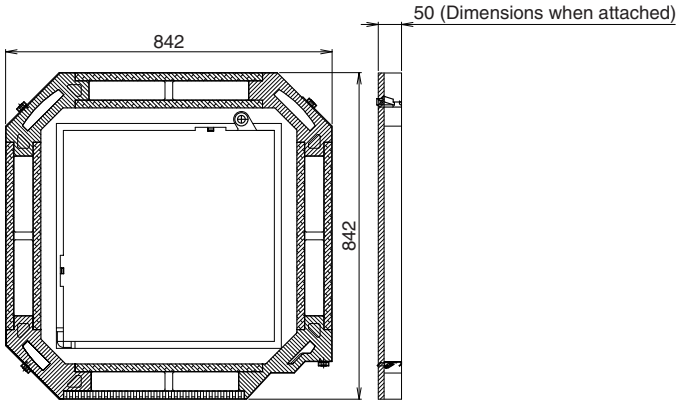

J: D3K07903

Item			Model KDDFP55B160
Inserted filter	High efficiency filter	65% (colorimetric method)	KAFP552B80 KAFP552B160
		90% (colorimetric method)	KAFP553B80 KAFP553B160
	Ultra long-life filter		KAFP55H160H
Material			Galvanized sheet iron. Foam polystyrene.
Accessories			Installation manual Sealing pad : 2
Mass		kg	3.0

Installation Manual

⚠Caution After thoroughly reading these "Safety Precautions", properly perform the installation.

- For the installation parts, accessory parts and specified components must always be used.
  If the specified components are not used, the kit may fall or an air leak may occur.
- After the completion of installation, perform a test run to check that no abnormality is present.

Recommendations

- This product can be mounted to ceiling mounted cassette-type air conditioner <round flow>.
- At the time of mounting, also refer to the installation manual for the indoor unit and to the one for the decoration panel.

Recommendations (When using ultra-long life filter)

The ultra-long life filter can be reused after cleaning.
After engineering work is completed, provide instructions to the customer about the filter cleaning interval and how to remove the filter.

Parts content Check the following parts.

Name	Filter chamber	Sealing pad	Installation manual
Shape	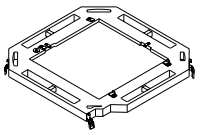		
Number of pieces	1	2	1 (This document)

1 Mounting of Filter Chamber

* When the indoor unit main body is already installed, perform the following operations, complying with precautions below.
Shut off power supply before performing the operation.
Remove the decoration panel from the indoor unit main body.
(For details, refer to the installation manual attached to the decoration panel.)

* When the indoor unit main body is newly installed

(1) Mount the filter chamber to the indoor unit main body using the hooks (4 positions).
Figure 1 to Figure 3
For the fixing method of the hooks, refer to the figure to the right. Mount at 4 positions.

* Mount so that the contours of the indoor unit main body and chamber are match. Figure 2 Figure 4

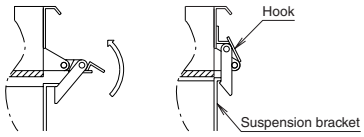

Fixing method of hooks

Figure 1

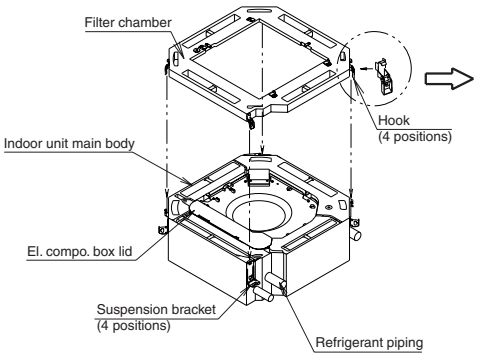

Figure 2 Mounting status

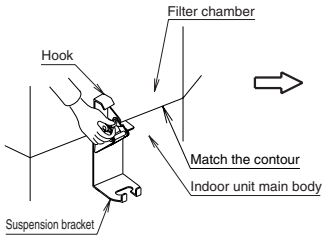

Figure 3 Status after mounting

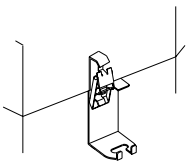

Figure 4 Drawing of mounting at completion

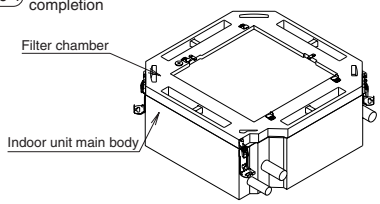

JC: 3K022717B

❷ Installation of Indoor Unit Main Body and Filter Chamber

- Install the indoor unit main body and filter chamber.
  At the time of installation, perform engineering work according to the installation manual attached to the air conditioner's main body. (For the installation height, refer to the figure to the right.)
- When mounting the filter chamber to the existing indoor unit main body, change the installation height of the indoor unit main body to height A in the figure to the right.
- Mount the supplied installation pattern paper to the indoor unit using screws to cure the indoor unit.
  (Refer to the installation manual of the indoor unit main body.)
  (Refer to the figure below.)

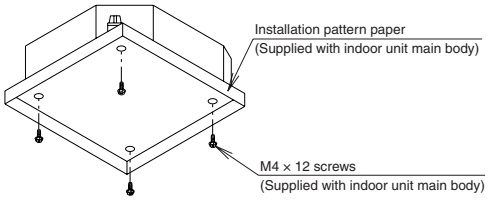

[Mounting of installation pattern paper]

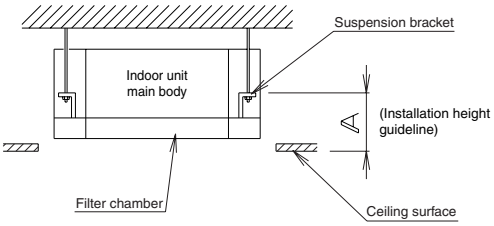

	A (mm)
BYCP125K-W1 BYCP125K-WS	185

- Complete all the refrigerant and drain piping work for the indoor unit main body.

❸ Mounting of Decoration Panel and Mounting of Filter Chamber

- After temporarily hooking the decoration panel, pass the lead wire, which is coming out from the decoration panel, through the wire through hole of the filter chamber.
  <Round flow> 1 swing motor lead wire
- Mount the decoration panel according to the installation manual attached to the decoration panel.

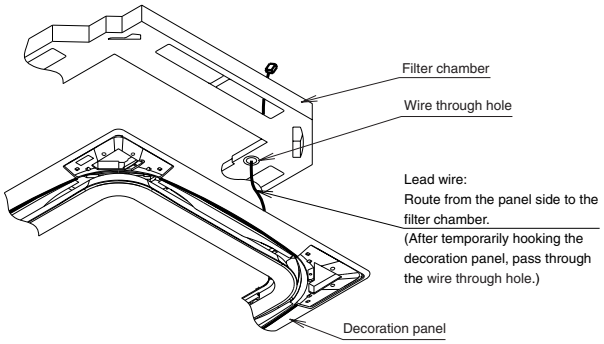

Figure 5

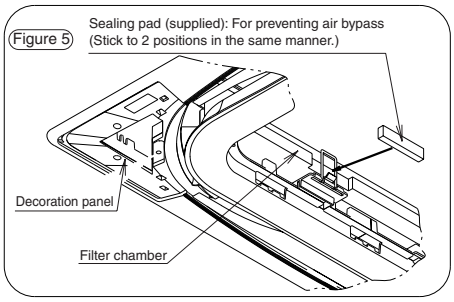

- Mounting of filter
  After the completion of wiring and sticking of sealing pad (2 positions), mount the filter.
  However, for a high-efficiency filter, use cutter to cut in the groove and remove the unnecessary areas (2 areas) before installing the filter.
  Figure 5 Figure 6
- ∗ When you attach the high efficiency filter to the unit, do not apply too much force to the filter.

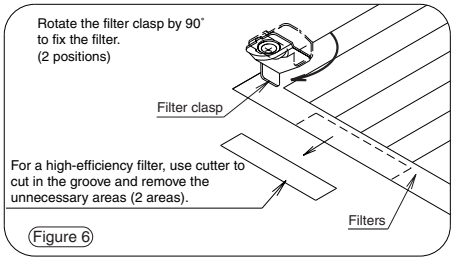

Figure 6

With wireless unit

- Route the connector of the receiver lead wire through the wire through hole, then connect the connector on the indoor PC board assembly.
- For details on the connection method, refer to the installation manual attached to the wireless remote control kit (sold separately).

❹ Preparation of Indoor Unit

- Depending on the types of mounting filters, setting the indoor unit main body is may be required.
  Using the field setting mode on the remote control, switch to the second code number shown in the table to the right.
  For the field setting mode, refer to "How to perform field setting" attached to the remote control.

Filter name		Mode No.	First code No.	Second code No.		Filter sign display interval time
High performance filter	80 only	13 or 23	0	02		———
	Both 80 and 160		1	02		
Ultra-long life filter		10 or 20	0	Where there is minimal fouling (Example: Office, etc.)	01	Approximately every 10,000 hours
				Where there is considerable fouling (Example: Pachinko parlor, etc.)	02	Approximately every 5,000 hours
			1	02		Initial setting for ultra-long life filter

JC: 3K022717B

2.17 KDDF55DA160 — High Efficiency Filter Chamber

KDDF55DA160

Dimensions Unit (mm)

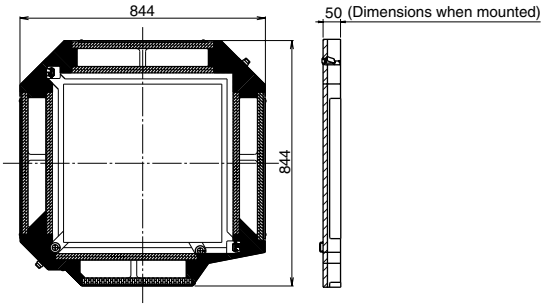

JC: D3K03293

Item			Model KDDF55DA160
Inserted filter	High efficiency filter	65% (colorimetric method)	KAFP552B80 KAFP552B160
		90% (colorimetric method)	KAFP553B80 KAFP553B160
	Ultra long-life filter		KAF55KA160H
Material			Galvanized sheet iron. Foam polystyrene.
Accessories			Installation manual Sealing pad: 2
Mass		kg	3.0

Installation Manual

⚠Caution Before starting the installation work, carefully read the following, safety precautions and observe them to ensure safety during work.

- Make sure to use the attached or specified components to install the products. Otherwise, it may cause air leak or the product may fall.
- After installation, check whether there is no abnormality during the trial operation.

REMARKS

- This kit can be installed to the Ceiling Mounted Cassette Type Air Conditioner<Multi-flow type>.
- Before installation, make sure the indoor unit model name.
- Refer to the installation manuals for the indoor unit and the decoration panel.

Notes (In case of useing the Ultra-long life filter)

Ultra-long life filter can be reused by cleaning. After installtion, instruct filter cleaning periad and removeing to customers.

Components Check if following parts are included with your kit.

Name	Filter chamber	Installation manual
Shape	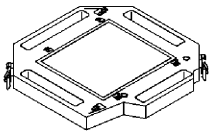	
Quantity	1 PC.	1 PC.

Combination table

Kit name	High Effciency filter	Ultra-long life filter	Indoor unit model that party crowed is possible	
KDDF 55DA160	KAFP552B80 KAFP553B80	KAF55KA160H	SkyAir	FHC35-60KVE, FHYC35-71KVE, FHC18-26NUV1, FHC18NUV2S, FHC21KV2S
			VRV	FXF25-80LVE
	KAFP552B160 KAFP553B160		SkyAir	FHYC100-140KVE, FHC30-48NUV1, FHC30/36/42PUV2S, FHC24/48NUV2S
			VRV	FXF100/125LVE

1 Preparation of indoor unit

- When you instell the Ultra-long life filter, the setting by the remote controller is required. Set the remote controller at the field setting mode and change the setting position number as shown on the table. Refer to the operation manual of remote controller for the field setting.

Filter name		Mode No.	First Code No.	Second Code No.		Contents of setting
High Effciency filter	Only 80	13 or 23	0	02		———
	Both 80 and 160		1	02		
Ultra-long life filter		10 or 20	0	Less dusty place	01	Filter cleaning period :Every 10,000 hrs
				Dusty place	02	Filter cleaning period :Every 5,000 hrs
			1	02		Filter sign display:Ultra-long life filter

C: 3K011148B

❷ Installation of Filter chamber

1. Remove the decoration panel. (This is not required for the new installtion)
   - Remove the decoration panel in the reverse step when the panel is installed.
     (Refer to the installation manual of the decoration panel for the details.)
2. Temporarily install the filter chamber to the indoor unit by hanging the lutch on the opposite side of the filter chamber to the hook of the indoor unit body. (2 portions)
   Temporarily hang the remaining 2 hooks of the filter chamber to the hooks on the sides of the indoor unit. (fig. 1) ~ (fig. 3)
   (When the indoor unit is already installed, hang the hook to the suspension bracket temporarily and fix the hook.)
   ※Installation set outline of the indoor unit (fig. 2)
3. Tighten 2hexahead screws located beneath the lutches until the thickness of the sealing material (fig. 4) (fig. 5)
   of chamber reduces to 5~8mm.

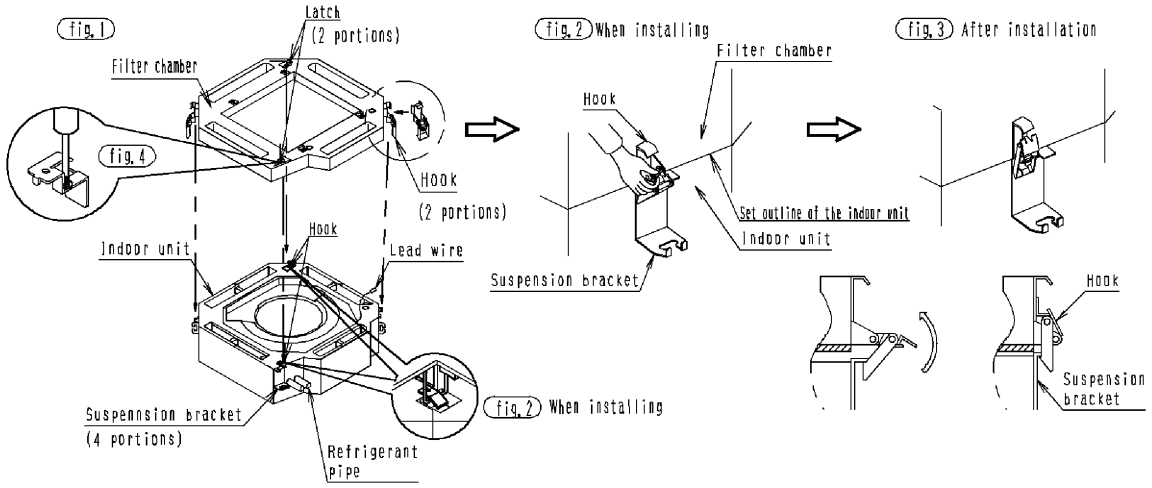

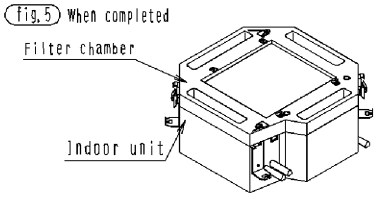

❸ Installation of the indoor unit and the Filter chamber

- Install the indoor unit and the filter chamber.
  Refer to the installation manual of the indoor unit.
  (For the height of the unit, refer to the drawing on the right.)
- Be complete installated refrigerant piping, and drain piping.
- Attach the paper pattern for installation to the indoor unit with screws to protect the indoor unit from dirt. [See below]
  (When the indoor unit is newly installed)
  (See below)
- In case of attaching the chamber after installed indoor unit.
  For the height of the unit, change the height shown on the right drawing.

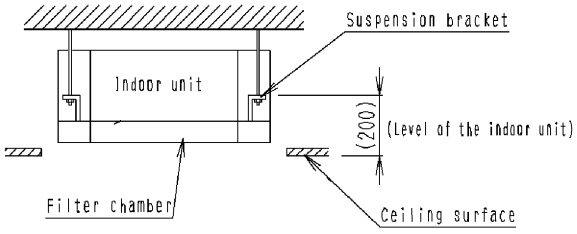

〔Attachment of the paper pattern〕

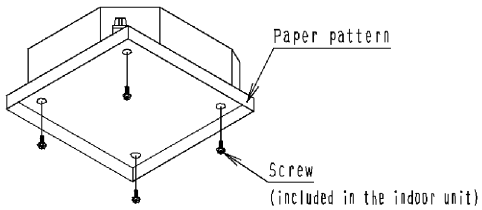

3K011148B

❹ Installation of Decoration panel and the Filter

- Install the Decoration panel in accordance with the installation manual attached to the decoration panel.

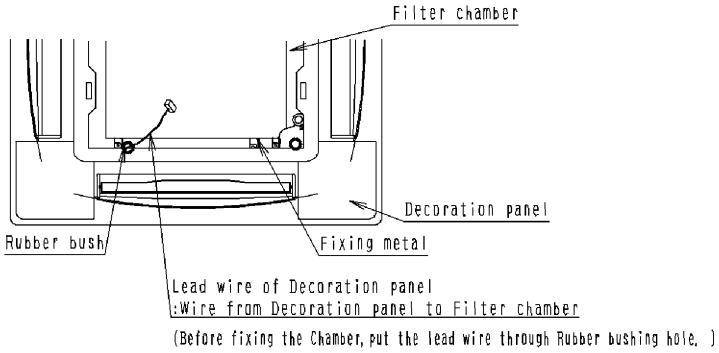

- Installation of Filter
  After connecting, install the Filter chamber. (fig. 6)

(fig. 6)

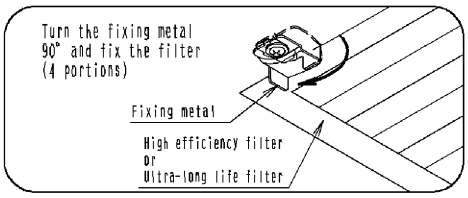

(In case of the panel for Wireless remote controller)

- Put the Connector for receiver lead wire through rubber bush and connect to the indoor PC board.
- Refer to the installation manual attached to the Wireless remote controller kit(optional)for the detail.

3K011148B

2.18 KAFP551K160 — Replacement Long-life Filter

KAFP551K160

Item \ Model		KAFP551K160
Initial pressure loss	Pa	4.9 or less
Final pressure loss	Pa	49 or less
Average efficiency	%	60 (gravity method)
Airflow rate	m^3/min	18
	l/sec	300
Life	h	5,000 (dust concentration 0.15 mg/m^3)
Filter element		Mould-proof and antibacterial resin net
Number of sheets included		1
Mass	kg	0.2

Caution

· Can be water-washed. Can be reused.

Dimensions Unit (mm)

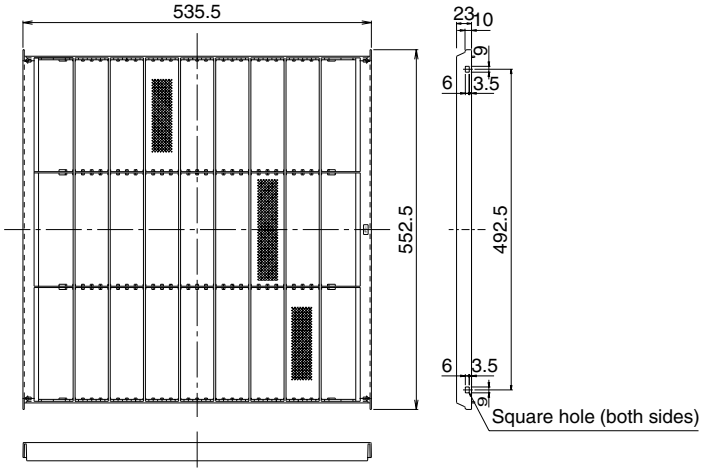

J: D3K05114

2.19 KAF551CA160 — Replacement Long-life Filter

KAF551CA160

KAF551KA160

Item	Model	KAF551CA160	KAF551KA160
Initial pressure loss	Pa	4.9 or less	8 or less
Final pressure loss	Pa	49 or less	
Average efficiency	%	65 (gravity method)	
Airflow rate	m^3/min	18	17.5
	l/sec	300	292
Life	h	5,000 (dust concentration 0.15 mg/m^3)	2,500 (dust concentration 0.15 mg/m^3)
Filter element		Mildew-proof resin net	
Number of sheets included		1	
Mass	kg	0.4	0.3

Caution

- Can be water-washed. Can be reused.

Dimensions Unit (mm)

KAF551CA160

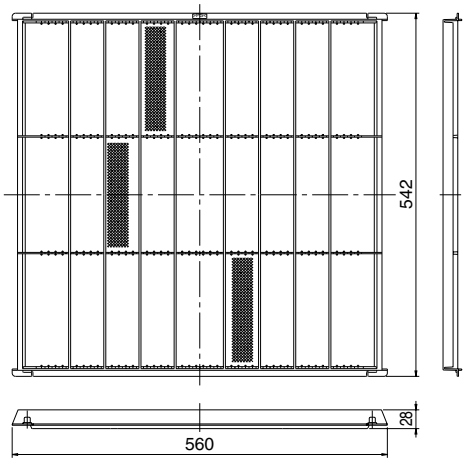

D3K3092

KAF551KA160

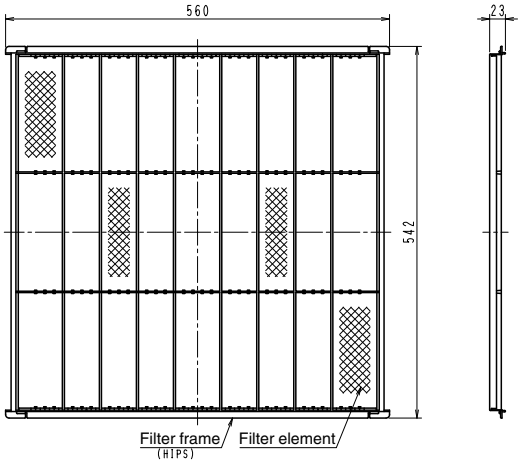

J: D3K2170C

2.20 KAFP55B160 — Ultra Long-life Filter Unit (Including Chamber)

Dimensions Unit (mm)

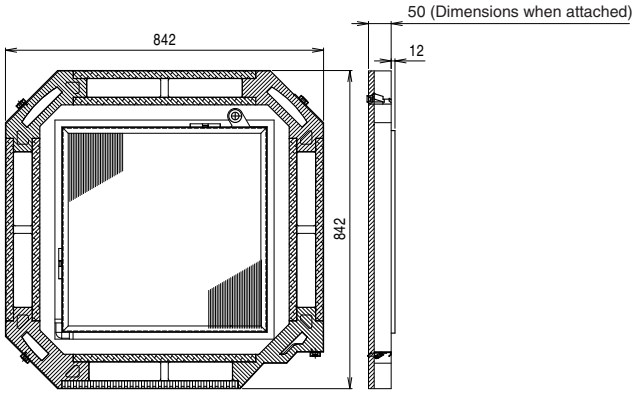

J: D3K07904

Caution

- In order to mount a ultra long life filter unit, setting of the main unit of indoor unit should be made.
- Individual filter (KAFP55H160H) is available as an optional accessory.

Mounting locations	Filter cleaning period
Locations with much dust	Approximately every 5,000 hours
Locations with little dust (e.g. offices)	Approximately every 10,000 hours

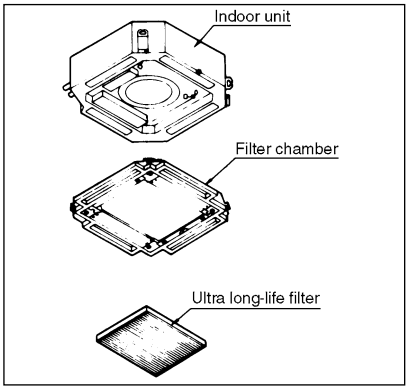

Item \ Model		KAFP55B160
Material		Galvanized steel iron. Foam polystyrene.
Initial pressure loss	Pa	8 or less
Final pressure loss	Pa	49 or less
Average efficiency	%	50 (gravity method)
Airflow rate	m^3/min	29.5
	l/sec	492
Life	h	5,000 (dust concentration 0.3 mg/m^3)
Filter element		Polypropylene honeycomb (with mould-proof)
Number of sheets included		1
Accessories		Installation manual. Sealing pad : 2
Mass	kg	4.7

Installation Manual

⚠Caution After thoroughly reading these "Safety precautions", properly perform the installation.

- For the installation parts, accessory parts and specified components must always be used.
  If the specified components are not used, the kit may fall or an air leak may occur.
- After the completion of installation, perform a test run to check that no abnormality is present.

Recommendations

- This product can be mounted to a ceiling mounted cassette-type air conditioner <Round flow>.
- At the time of mounting, also refer to the installation manual for the indoor unit and to the one for the decoration panel.

Recommendations

The ultra-long life filter can be reused after cleaning.
After the engineering works are completed, provide instructions to the customer about the filter cleaning interval and how to remove the filter.

Parts content Check the following parts.

Name	Ultra-long life filter unit	Sealing pad	Installation manual
Shape	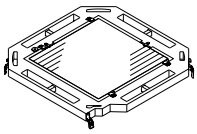		
Number of pieces	1	2	1 (This document)

1 Mounting of Ultra-Long Life Filter Unit

* When the indoor unit main body is already installed, perform the following operations, complying with precautions below.
Shut off power supply before performing the operation.
Remove the decoration panel from the indoor unit main body.
(For details, refer to the installation manual attached to the decoration panel.)

* When the indoor unit main body is newly installed

(1) Remove the ultra-long life filter from the ultra-long life filter unit. (Figure 1)
(2) Mount the ultra-long life filter unit to the indoor unit main body using the hooks (4 positions). (Figure 2) to (Figure 4)
For the fixing method of the hooks, refer to the figure to the right. Mount at 4 positions.

* Mount so that the contours of the indoor unit main body and chamber match. (Figure 3) (Figure 5)

(Figure 1)

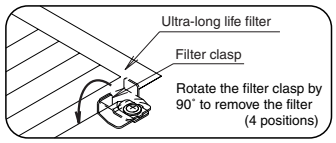

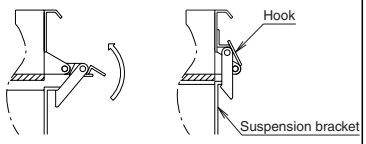

Fixing method of hooks

(Figure 2)

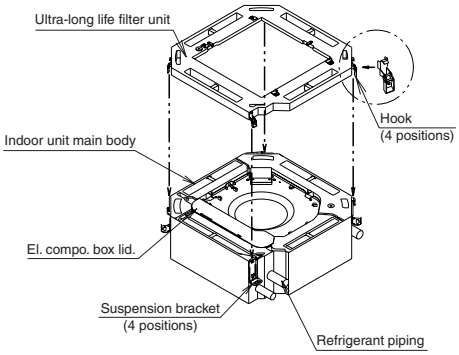

(Figure 3) Mounting status

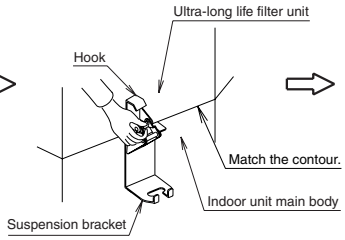

(Figure 4) Status after mounting

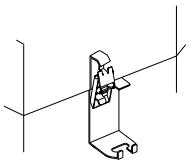

(Figure 5): Drawing of mounting at completion

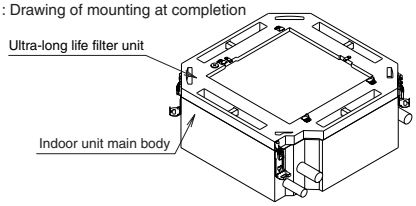

JC: 3K022852B

2 Installation of Indoor Unit Main Body and Ultra-Long Life Filter Unit

- Install the indoor unit main body and ultra-long life filter unit.
  At the time of installation, perform engineering work according to the installation manual attached to the air conditioner's main body. (For the installation height, refer to the figure to the right.)
- When mounting the ultra-long life filter unit to the existing indoor unit main body, change the installation height of the indoor unit main body to height A in the figure to the right.
- Mount the supplied installation pattern paper to the indoor unit by using screws to cure the indoor unit.
  (Refer to the installation manual of the indoor unit main body.)
  (Refer to the figure below.)

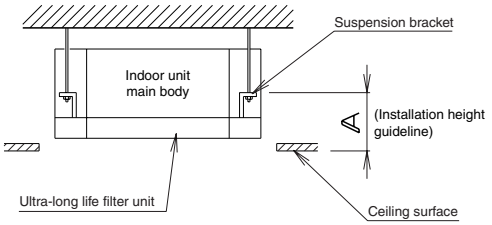

	A (mm)
BYCP125K-W1 BYCP125K-WS	185

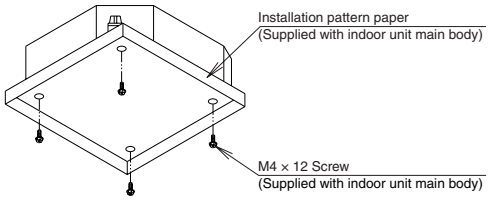

[Mounting of installation pattern paper]

- Complete all the refrigerant and drain piping work for the indoor unit main body.

3 Mounting of Decoration Panel and Mounting of Ultra-Long Life Filter

- After temporarily hooking the decoration panel, pass the lead wire, which is coming out from the decoration panel, through the wire through hole of the ultra-long life filter unit.
  <Round flow> 1 swing motor lead wire
- Mount the decoration panel according to the installation manual attached to the decoration panel.

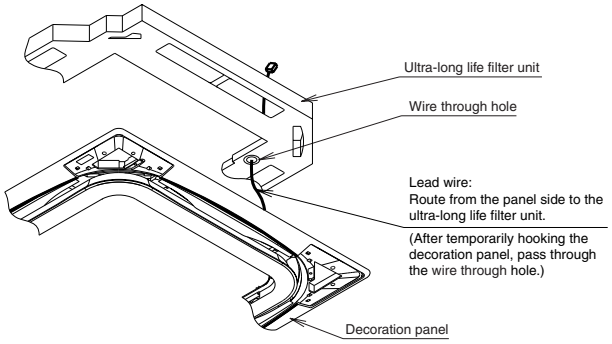

Figure 6 Sealing pad (supplied): For preventing air bypass (Stick to 2 positions in the same manner.)

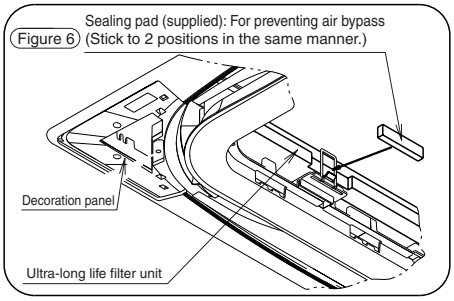

- Mounting of ultra-long life filter
  After the completion of wiring and sticking of sealing pad (2 positions), mount the ultra-long life filter. Figure 6 Figure 7

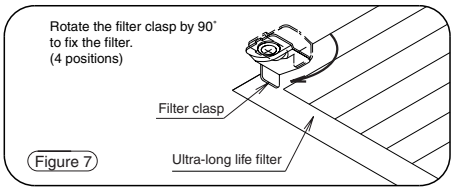

Figure 7

With wireless unit

- Route the connector of the receiver lead wire through the wire through hole, then connect the connector on the indoor printed circuit board assembly.
- For details on the connection method, refer to the installation manual attached to the wireless remote control kit (sold separately).

4 Preparation of Indoor Unit

- With the mounting of a ultra-long life filter unit, setting the indoor unit main body is required.
  Using the field setting mode on the remote control, switch to the second code number shown in the table to the right.
  For the field setting mode, refer to "How to perform field setting" attached to the remote control.

Mode No.	First code No.	Second code No.		Filter sign display interval time
10 or 20	0	Where there is minimal fouling (Example: Office, etc.)	01	Approximately every 10,000 hours
		Where there is considerable fouling (Example: Pachinko parlor, etc.)	02	Approximately every 5,000 hours
	1	02		Initial setting for ultra-long life filter

JC: 3K022852B

2.21 KAF55DA160 — Ultra Long-life Filter Unit (Including Chamber)

Dimensions Unit (mm)

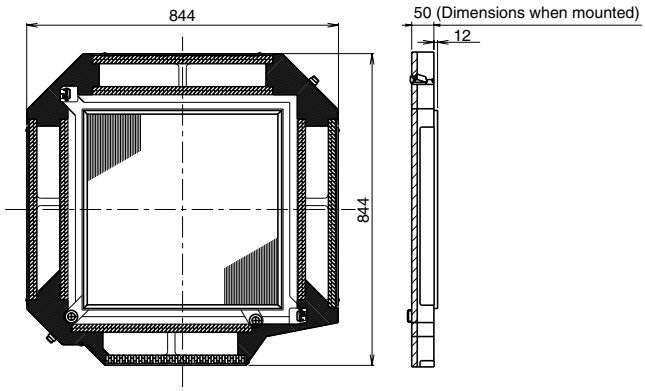

JC: D3K03294

Caution

- In order to mount a ultra long-life filter unit, setting of the main unit of indoor unit should be made.
- Individual filter (KAF55KA160H) is available as an optional accessory.

Mounting locations	Filter cleaning period
Locations with much dust	Approximately every 5,000 hours
Locations with little dust (e.g. offices)	Approximately every 10,000 hours

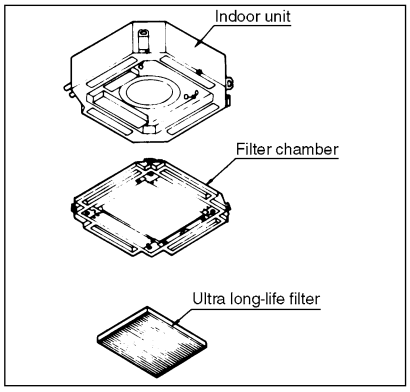

Item \ Model		KAF55DA160
Material		Galvanized steel iron. Foam polystyrene.
Initial pressure loss	Pa	8 or less
Final pressure loss	Pa	49 or less
Average efficiency	%	50 (gravity method)
Airflow rate	m^3/min	29.5
	1/sec	492
Life	h	5,000 (dust concentration 0.3 mg/m^3)
Filter element		Polypropylene honeycomb (with mould-proof)
Number of sheets included		1
Accessories		Installation manual.
Mass	kg	4.7

Installation Manual

⚠Caution Before starting the installation work, carefully read the following, safety precautions and observe them to ensure safety during work.

- Make sure to use the attached or specified components to install the products. Otherwise, it may cause air leak or the product may fall.
- After installation, check whether there is no abnormality during the trial operation.

REMARKS

- This kit can be installed to the Ceiling Mounted Cassette Type Air Conditioner<Multi-flow type>.
- Before installation, make sure the indoor unit model name.
- Refer to the installation manuals for the indoor unit and the decoration panel.

Notes

Ultra-long life filter can be reused by cleaning.
After installtion, instruct filter cleaning periad and removeing to customers.

Combination table

Kit name	Indoor unit model that party crowded is possible	
KAF55DA160	SkyAir	FHC35-60KVE, FHYC35-140KVE, FHC18-48NUV1, FHC30/36/42PUV2S, FHC18/24/48NUV2S, FHC21KV2S, FHC71DV2S
	VRV	FXF25-125LVE

Components Check if following parts are included with your kit.

Name	Ultra-long Life Filter Unit	Installation manual
Shape	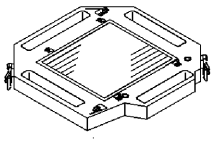	
Quantity	1 PC.	1 PC.

❶ Preparation of indoor unit

- When you instell the Ultra-long life filter, the setting by the remote controller is required. Set the remote controller at the field setting mode and change the setting position number as shown on the table. Refer to the operation manual of remote controller for the field setting.

Mode No.	First Code No.	Second Code No.		Contents of setting
10 or 20	0	Less dusty place	01	Filter cleaning period :Every 10,000 hrs
		Dusty place	02	Filter cleaning period :Every 5,000 hrs
	1	02		Filter sign display:Ultra-long life filter

❷ Installation of Ultra-long life filter Unit

1. Remove the decoration panel. (This is not required for the new installtion)
   - Remove the decoration panel in the reverse step when the panel is installed. (Refer to the installation manual of the decoration panel for the details.)
2. REmove the Ultra-long life filter. (fig. 1)
3. Temporarily install the filter chamber to the indoor unit by hanging the lutch on the opposite side of the filter chamber to the hook of the indoor unit body. (2 portions)
   Temporarily hang the remaining 2 hooks of the filter chamber to the hooks on the sides of the indoor unit. (fig. 2) ~ (fig. 4)
   (When the indoor unit is already installed, hang the hook to the suspenssion bracket temporarily and fix the hook.)
   ※Installation set outline of the indoor unit (fig. 3)
4. Tighten 2hexahead screws located beneath the lutches until the thickness of the sealing material (fig. 5) (fig. 6) of chamber reduces to 5~8mm.

(fig. 1)

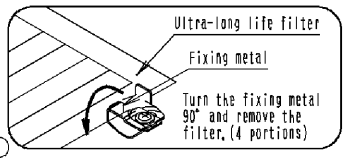

(fig. 2)

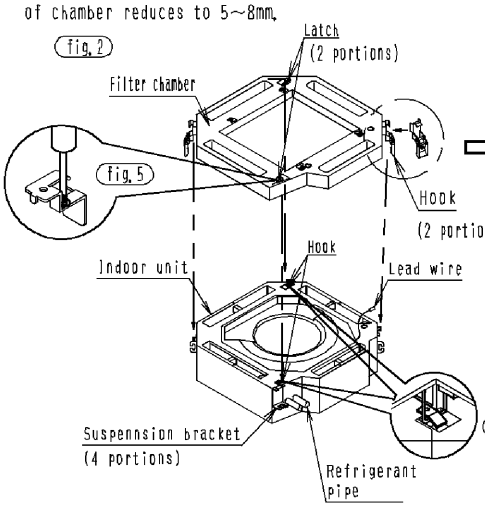

(fig. 3) When installing

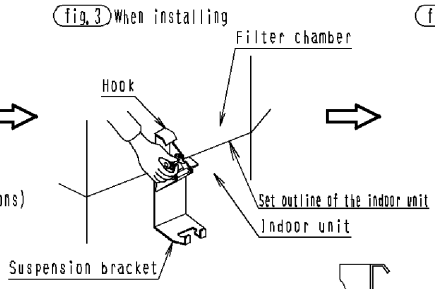

(fig. 4) After installation

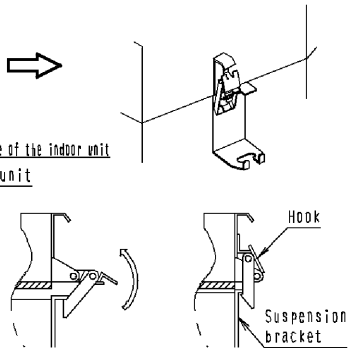

(fig. 3) When installing

(fig. 6) When completed

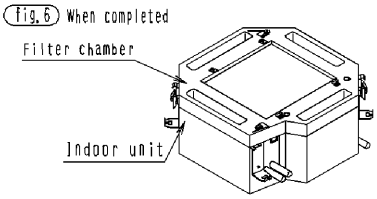

C: 3K011147B

❸ Installation of the indoor unit and the Ultra-long life filter unit

- Install the indoor unit and the Ultra-long life filter unit.
  Refer to the installation manual of the indoor unit.
  (For the height of the unit, refer to the drawing on the right.)
- Be complete installated refrigerant piping, and drain piping.
- Attach the paper pattern for installation to the indoor unit with screws to protect the indoor unit from dirt. [See below]
  (When the indoor unit is newly installed)
  (See below)
- In case of attaching the chamber after installed indoor unit.
  For the height of the unit, change the height shown on the right drawing.

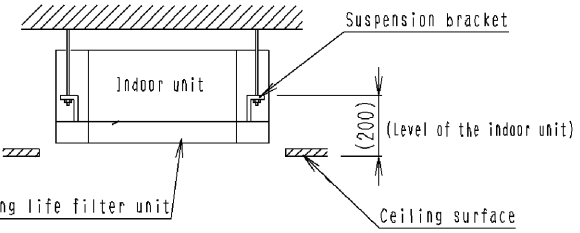

[Attachment of the paper pattern]

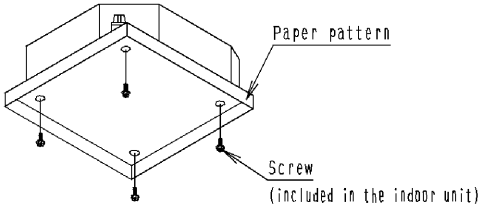

❹ Installation of the Decoration panel and the Ultra long-life filter

- Install the Decoration panel in accordance with the installation manual attached to the decoration panel.

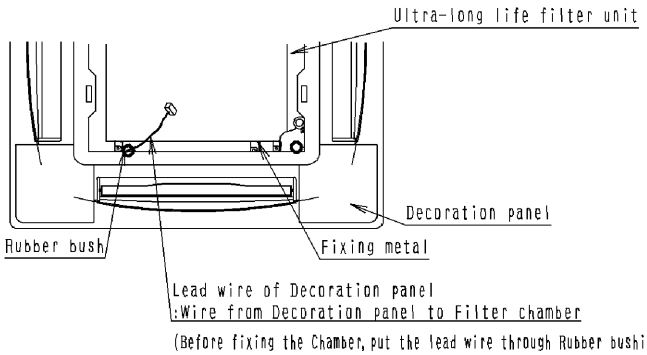

- Installation of the Ultra long-life filter
  After connecting, install the Filter chamber. (fig. 7)

(fig. 7)

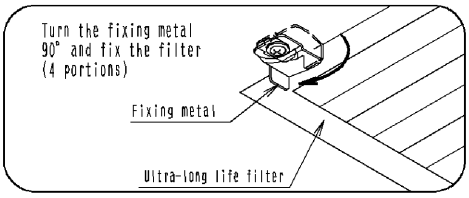

In case of the panel for Wireless remote controller

- Put the Connector for receiver lead wire through rubber bush and connect to the indoor PC board.
- Refer to the installation manual attached to the Wireless remote controller kit(optional)for the detail.

3K011147B

2.22 KAFP55H160H — Replacement Ultra Long-life Filter

KAFP55H160H

Dimensions Unit (mm)

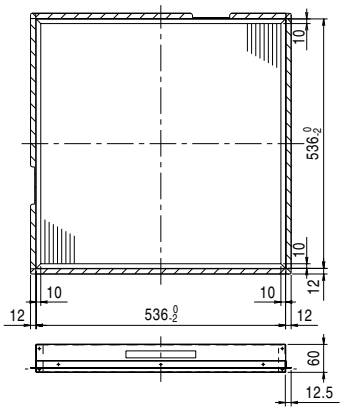

J: D3K04257

Caution

- Can be water-washed. Can be reused.
- The filter chamber (KDDFP55B160) is required when the ultra long life filter will be installed.

Item \ Model		KAFP55H160H
Initial pressure loss	Pa	8 or less
Final pressure loss	Pa	49 or less
Average efficiency	%	50 (gravity method)
Airflow rate	m^3/min	29.5
	l/sec	492
Life	h	5,000 (dust concentration 0.3 mg/m^3)
Filter element		Mould-proof resin net
Number of sheets included		1
Mass	kg	3.4

2.23 KAF55KA160H — Replacement Ultra Long-life Filter

KAF55KA160H

Dimensions Unit (mm)

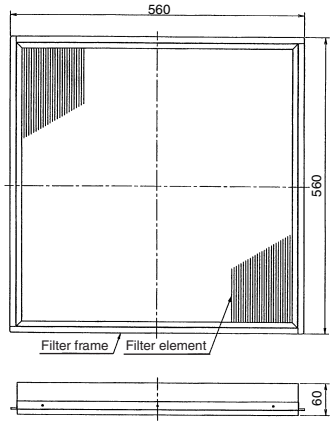

JC: D3K2174A

Caution

· Can be water-washed. Can be reused.

Item \ Model		KAF55KA160H
Initial pressure loss	Pa	8 or less
Final pressure loss	Pa	49 or less
Average efficiency	%	50 (gravity method)
Airflow rate	m^3/min	29.5
	l/sec	492
Life	h	5,000 (dust concentration 0.3 mg/m^3)
Filter element		Mould-proof resin net
Number of sheets included		1
Mass	kg	1.7

2.24 KDJP55B80 / KDJP55B160 — Branch Duct Chamber

Item \ Model	KDJP55B80	KDJP55B160
Material	Hot-dip zinc-coated carbon steel sheet (with insulation)	
Accessories	Mounting screws. Blocking pad. Tape for fixing the blocking pad. Opening sealing material. Insulation material. Installation manual.	

Caution

1. When mounting, refer to the installation manuals for the indoor unit and the decoration panel.

Dimensions Unit (mm)

KDJP55B80

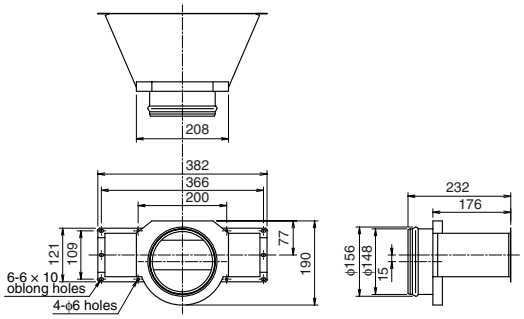

J: D3K07974A

KDJP55B160

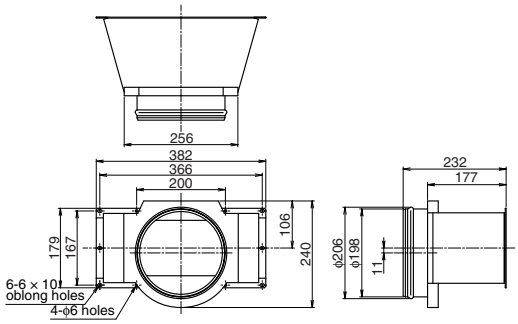

J: D3K07975A

Installation Manual

Precautions

- This product can be mounted to a ceiling mounted cassette-type air conditioner <round flow>.
- At the time of mounting, also refer to the installation manual for the indoor unit main body and to the one for the decoration panel.
- For the duct (field supplied) to be connected, those specified in the table to the right are recommended.

Recommended duct

Branch duct chamber	Connecting duct kit name
KDJP55B80	K-FDS151D (1 m) or K-FDS152D (2 m) (Flexible duct: Nominal diameter of φ150)
KDJP55B160	K-FDS201D (1 m) or K-FDS202D (2 m) (Flexible duct: Nominal diameter of φ200)

Parts content Check the following parts.

Name		Main body insulator			Main body opening sealant		
Shape/ Number		1	2	3	4	5A (Small)	5B (Large)
Number of pieces	80	1	1	2	2	2	—
	160					1	1

Name		Branch duct chamber	Mounting screw	Installation manual	Sealing material	Tape for fixing the sealing material
Shape/ Number		6	7 M4×16	8	9	10
Number of pieces	80	1	10	1	2	2
	160					

1 Preparation Before Installation

With this branch duct, an independent 4-way and simultaneous 2-branch drawing are also possible.

- With this branch duct chamber, the blow directions shown in the figure to the right can be selected.
  Select the blow direction that is most appropriate for the room shape and installation position. (Blow directions other than those in the figure to the right cannot be selected.)
- From the external static pressure/air volume characteristics (refer to the Engineering Data), select the duct length and air outlet.

Precautions

- Be sure to securely block the air outlet of the indoor unit main body to which the branch duct chamber is mounted. If the blocking is incomplete, water spraying or condensation may occur. Do not block the corner sections.
  (Refer to 4 Mounting of Sealing Material to Indoor Unit .)
- When mounting the branch duct chamber, be sure to perform field setting of the indoor unit main body.
  (Refer to 5 Field Setting .)

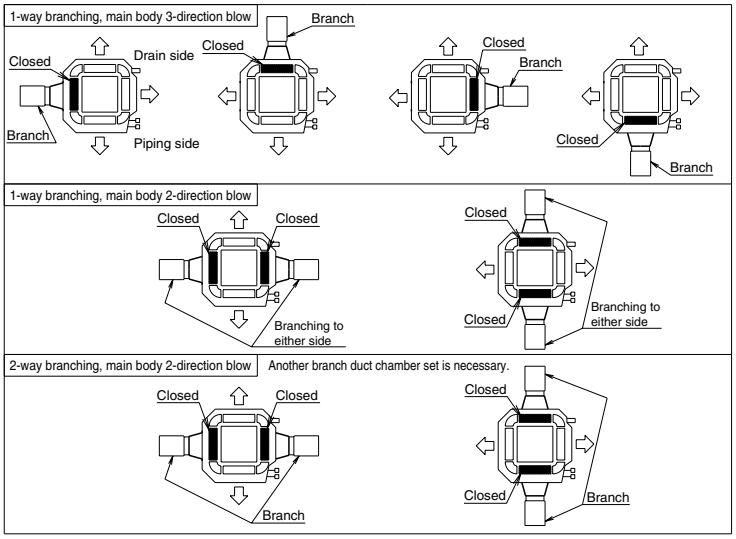

2 Mounting of Branch Duct Chamber

When an installation is performed after mounting the branch duct chamber to the indoor unit main body (at new installation), do not apply force to the branch duct chamber. (Deformation may occur.)

(1) Select the position where the branch duct chamber is mounted.
(2) Mount the branch duct chamber to the indoor unit according to the following procedure. (Figure 2 is an example of the face ① side.)
  1) Along the slit, cut the side plate of the indoor unit to which the branch duct chamber is mounted. Then, cut the internal insulator along the groove.
  (Use nippers, etc., to cut the slit section, and cutter, etc., to cut the groove section.) Figure 2

⚠ For the port opening operation, do not use a tool that produces chips, such as a saw. The drain system may become clogged, and a water leak may occur.

  2) Use the sealant for sticking so that the gaps between the side plate and internal insulator are filled around the full circumference. Figure 3
  - First, stick the main body's opening sealant 4 to left and right of the opening, and the main body's opening sealant 5A (5B) to the upper and lower sides of the opening.
    At this time, fold the main body opening sealant towards the inside so that the gap between the side plate and internal insulator is no longer visible.

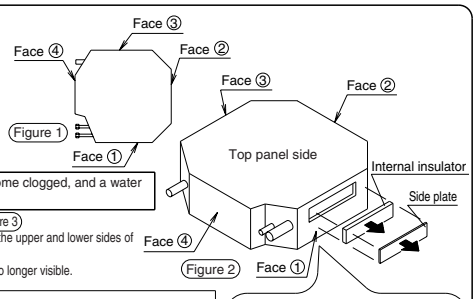

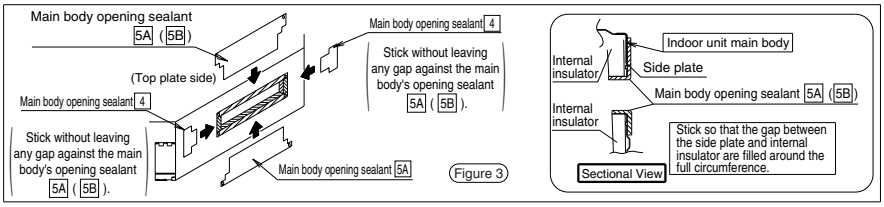

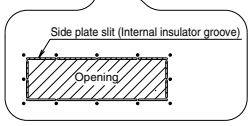

JC: 1P267944D

3) Mount the branch duct chamber 6. (Figure 4)

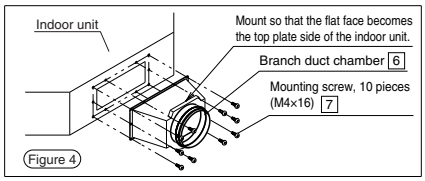

Figure 4

(3) Stick the main body insulator to the indoor unit. (The figure is an example of the face ① side) (Figure 5)

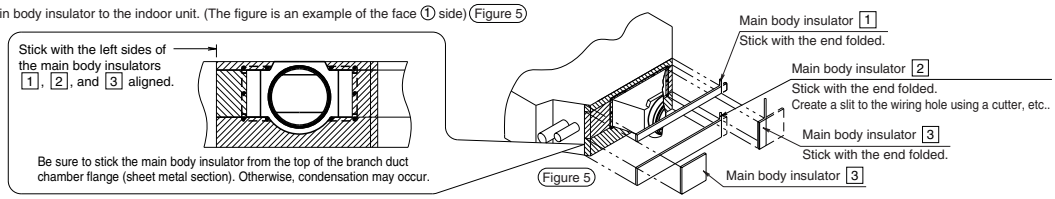

Figure 5

3 Duct Connection

<<Duct: KDJP55B80 ··· Nominal diameter of Φ150
KDJP55B160 ··· Nominal diameter of Φ200>>

1) Connect the duct to the outside of the branch duct chamber. (Figure 6)
- After the connection, wrap the connection area with tape (field supplied) to prevent an air leak.

• Apply insulation for all the ducts.

Precautions Do not perform duct manipulation described below.

a) Extreme bending

b) Multiple bending

c) Reduction of connecting duct diameter

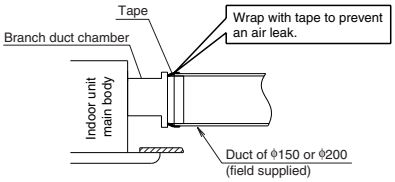

Figure 6

* 1. Beware that, in accordance with the local law, there may be cases where the use of a nonflammable duct is compulsory.
2. When a duct goes through fire protection areas, including a fire proof structure, beware that, in accordance with the local law, it may be required to establish a damper or to build a structure that is not detrimental to fire protection.
3. When penetrating a wooden construction wall with a metal duct, apply electrical insulation to the duct and wall.

4 Mounting of Sealing Material to Indoor Unit

<<With the sealing material supplied in this kit, blocking of two openings can be performed.>>

- For the block position, refer to 1 Preparation Before Installation, then determine the position. Always block the branch duct mounting surface.

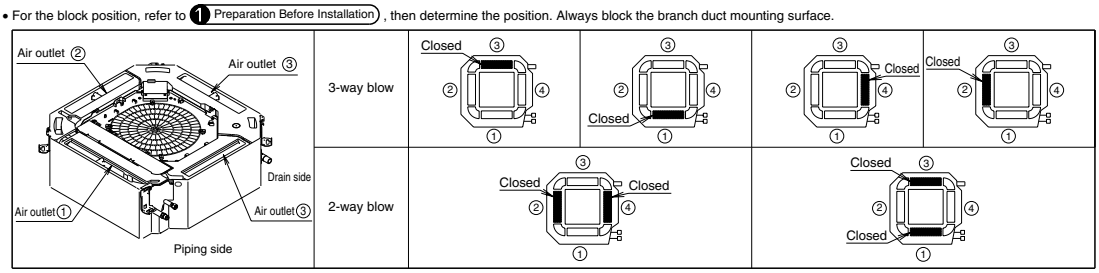

<Round flow>

(1) Prepare the closure materials and the tape for fixing the closure materials to suit the outlets to be closed (①to④) and apply them to the outlets.

Precautions When pasting the closure materials to the tape, be sure that the number printed on the closure materials are visible so that the closure materials can be identified easily.

1) Cut the closure materials ⑨ and the tape for fixing the closure materials ⑩ along the longitudinal perforation (--- Part). Use scissors to cut off the tape for fixing the closure materials.

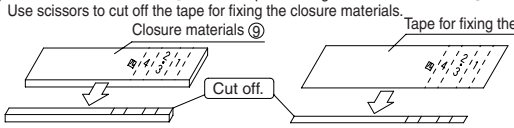

2) Cut the closure materials ⑨ and the tape for fixing the closure materials ⑩ along the latitudinal perforation (--- Part), leaving the number printed on the closure materials intact. (For the outlet ④, leave the number "四".) Use scissors to cut off the tape for fixing the closure materials.

3) Apply the closure materials ⑨ to the tape for fixing the closure materials ⑩.

Example) When blocking air outlet ② or ③

<Sealing material preparation>

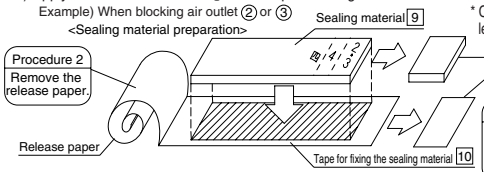

* Cut the closure materials and the tape along the perforation, leaving the number of the outlet to close intact.

Procedure 3
Stick the sealing material so that it is at the centre of the tape for fixing the sealing material.

Precautions
The sealing material has a directional property. Be sure to stick the sealing material to the tape for fixing the sealing material so that the printed number of the outlet to be blocked becomes visible.

* Position the closure member at the center of the tape.

(2) Stick the sealing material that was prepared in (1) to the air outlet of the indoor unit main body.

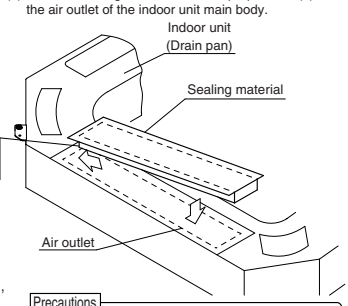

Precautions
When pasting the closure materials to the outlet, be careful not to leave any gap or a rising part between the closure materials and the outlet. It may cause leaking air and condensation.

5 Mounting of Decoration Panel

For safety, be sure to shut off power supply before starting the decoration panel mounting operation and connecting the connectors for swinging.

JC: 1P267944D

Refer to the installation manual attached to the decoration panel.
After mounting the decoration panel, check that no gap is present between the decoration panel and the unit's main body.

6 Field Setting

- When mounting the branch duct chamber, setting the indoor unit main body is required. After all the engineering work is completed, perform setting together with field setting of the indoor unit.
Using the field setting mode on the remote control, switch to the second code number shown in the table to the right. For the field setting mode, refer to "How to perform field setting" attached to the remote control.

Branch blow pattern	Mode No.	First code No.	Second code No.
1-way branching, 3-direction blow	13 or 23	1	02
1-way branching and 2-way blow or 2-way branching and 2-way blow			03

JC: 1P269813B

2.25 KDP55DA80 / KDP55DA160 — Branch Duct Chamber

Item \ Model	KDP55DA80	KDP55DA160
Material	Hot-dip zinc-coated carbon steel sheet (with insulation)	
Accessories	Mounting screws. Blocking pad. Tape for fixing the blocking pad. Opening sealing material. Insulation material. Moisture absorber for swing flap. Installation manual.	

Caution

1. When mounting, refer to the installation manuals for the indoor unit and the decoration panel.

Dimensions Unit (mm)

KDP55DA80

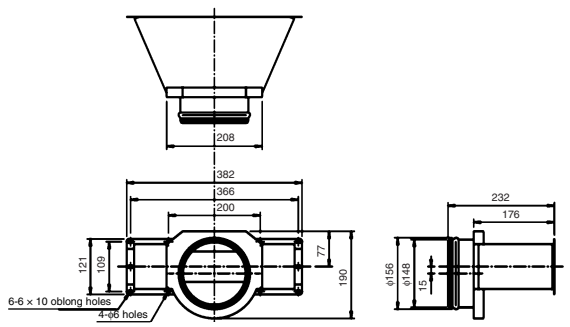

JC: D3K03266

KDP55DA160

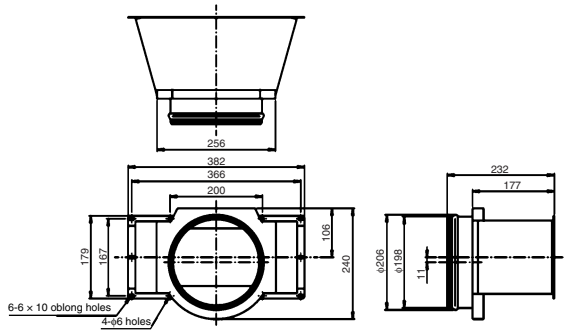

JC: D3K03267

Installation Manual

REMARKS

- This kit can be installed to the Ceiling Mounted Cassette Type Air Conditioner<Multi-flow type>.
- Before installation, make sure the indoor unit model name.
- Refer to the installation manuals for the indoor unit and the decoration panel.

Combination table

Kit name	Indoor unit model that party crowed is possible	
KDP55DA80	VRV	FXF25-80LVE
KDP55DA160	VRV	FXF100 / 125LVE

Contents of kit Check if the following parts are included with this kit.

NAME		Branch Duct Chamber	Screw	Installation Manual	Sealing Material	Tape for fixing the Sealing Material
Shape・Number			M4x16			
Q'ty	80	1 PC.	10 PCS.	1 PC.	2 PCS.	2 PCS.
	160					

NAME		Indoor unit insulation material				Indoor unit opening seal material			Moisture Absorber for Swing flap	Spacer	Spacer installation screw
Shape・Number		①	②	③	④	⑤ (Small)	⑥A (Large)	⑥B (Large)	⑦ There are 5 types (colors) to match the panel color	⑧	⑨ (M3x10)
Q'ty	80	1 PC.	1 PC.	1 PC.	1 PC.	2 PCS.	2 PCS.	—	3 PCS. (5types)	1 PC.	1 PC.
	160						1 PC.	1 PC.			

1 Pre-installation preparations This branch duct can be used for 4 directions independently or 2 directions at once.

- You may choose the following outlet directions for this branch duct chamber. Select the outlet direction that best fits the shape of the room or the installation location. (Outlet directions other than the below cannot be selected)
- Select the duct length and outlet vent according to the external static sound pressure and fan strength characteristics(refer to the technical guide).

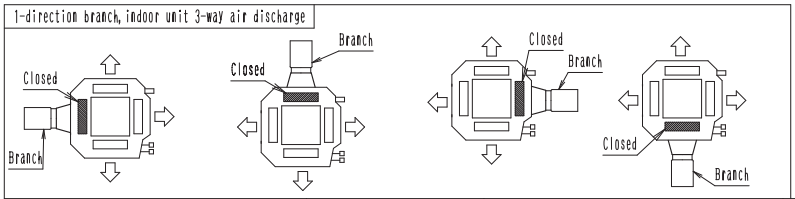

Caution

- Be sure to completely seal off the air outlet on the indoor unit to which the branch duct chamber is attached. If the seal in imperfect, this may cause water splattering and condensation.
  (REfer to ④ Installation of the sealing material to the indoor unit)
- When attaching the Branch Duct Chamber, be sure to perform the setting for indoor unit.
  (Refer to ⑤ Setting for indoor unit)

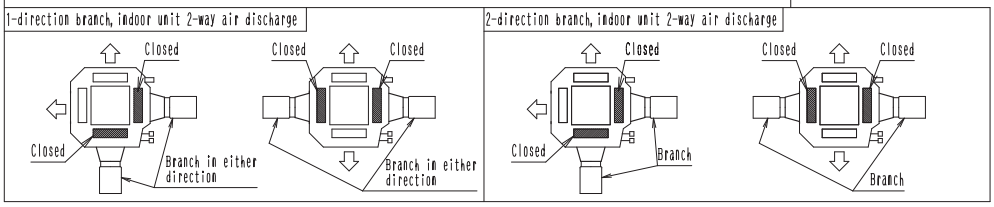

C: 1P089650C

3

❷ Installation of the Branch Duct Chamber

When installing the indoor unit after attaching the Branch Duct Chamber (for a new installation), avoid applying undue pressure on the Branch Duct Chamber. (This may damage it.)

(1) Select the position to attach the Branch Duct Chamber. (fig. 1)

(2) Attach the Branch duct chamber to the indoor unit following the steps below. (the fig. shows the ① side.)

1) Cut off the indoor unit side panel to which the Branch duct chamber will be attached along the slit. Next, cut off the interior insulating material along the groove. (Cut off the slit part using nippers, and the groove part using cutters.) (fig. 2)

2) Attach the sealing material so that it hides the gap between the side panel and interior insulating material. (fig. 3)

- First attach the indoor unit opening seal material (small) ⑤ to right and left of the opening, then the indoor unit opening seal material (large) ⑥ above and below. At this time, fold the indoor unit opening seal material in so that the gap between the side panel and interior insulating material is hidden.

3) Attach the Branch duct chamber. (fig. 4)

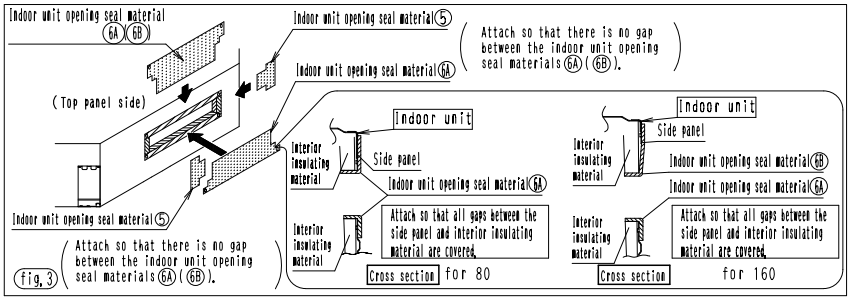

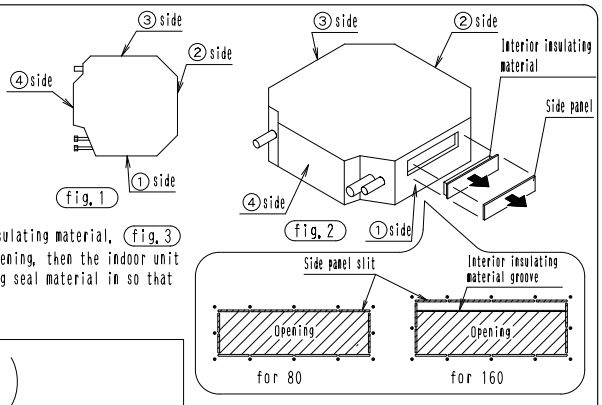

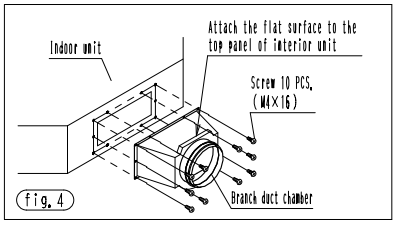

(3) Attach the Indoor unit insulating material to the indoor unit. (The fig. shows the ① side.) (fig. 5)

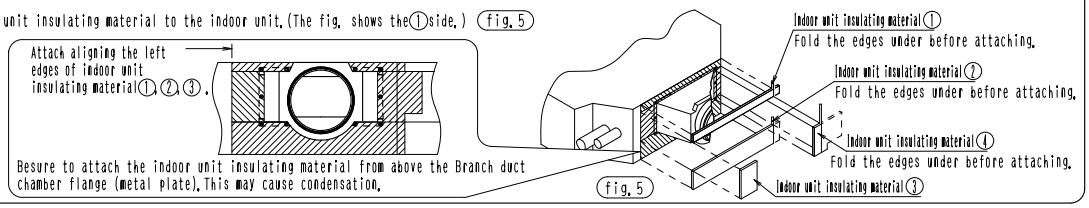

❸ Duct connection

《Duct: KDP55DA80 …diameter φ150
KDP55DA160 …diameter φ200》

1) Attach the duct to the outside of the Branch duct chamber. (fig. 6)

- Wrap the duct tape (Field supplied) around the connection to prevent air leak.
- Insulate the duct to prevent condensate.

2) Do not perform the following duct work.

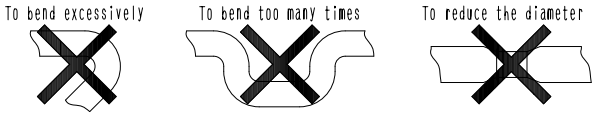

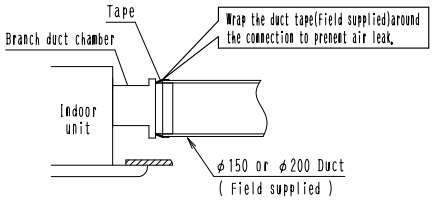

fig. 6

Caution

- follow the local code or regulation to install the duct.
- In case that metal duct is penetrated through wooden wall, make sure the duct and the wall are electrically insulated.

C: 1P089650C

❹ Installation of the sealing material to the indoor unit

《The sealing material included in this kit is enough for two air outlets.》

- Select which air outlet to be closed off referring to ❶ Pre-installation preparations. Be sure to close off the branch duct attachment side.

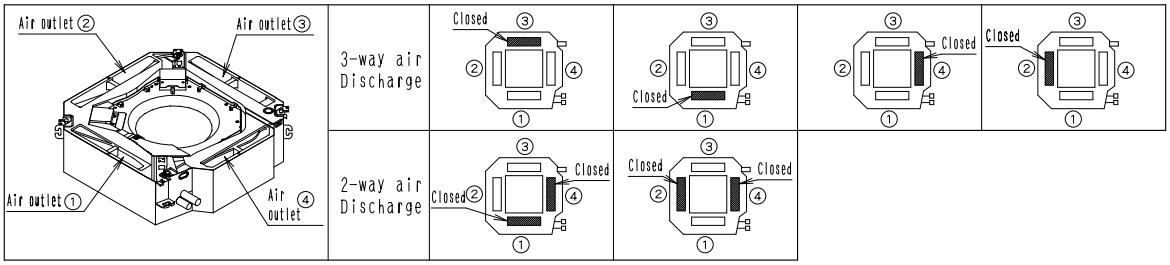

(1) Prepare the sealing material and the tape for fixing the sealing material according to the air outlet No. To be closed.
- Cut off the sealing material and the tape along the perforated lines (marked – – –).
- Adhere the sealing material to tape. (Make sure that the sealing material is placed at the center of the tape.)

(2) Adhere the sealing material prepared according to the procedure(1) to the indoor unit air outlet.

Example) For closing the air outlet ①

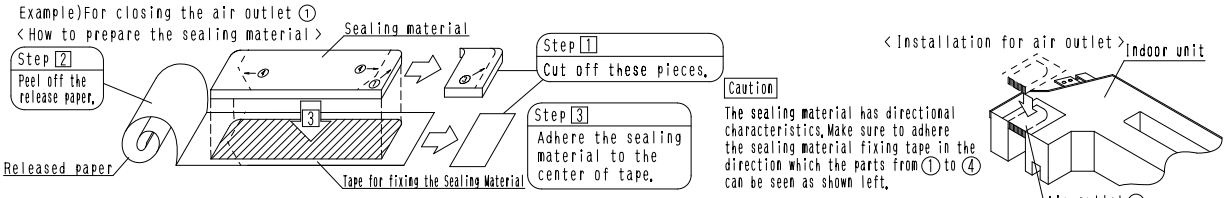

※When closing the air outlet ②, it is not required to work on the sealing material.

❺ Setting for indoor unit

- When you install the Branch duct chamber, the setting by the remote controller is required.
  Set the remote controller at the field setting mode and change the second code number as shown on the table.
  Refer to the operation manual of remote controller for the field setting.

Branch and air discharge patterns	Mode number	First code number	Second code number
1-direction branch, 3-way air Discharge	13 or 23	1	02
1-direction branch, 2-way air Discharge or 2-direction branch, 2-way air Discharge			03

❻ Installation of Decoration panel

Please turn off the power supply for safety absolutely, before you do affixation of insulation and connected work of swing conector.

Refer to the installation manual for the decoration panel. After installing the decoration panel, make sure there are no gaps between it and the indoor unit.

- Please install spacer ⑧ on the swing motor with the spacer installation screw ⑨.

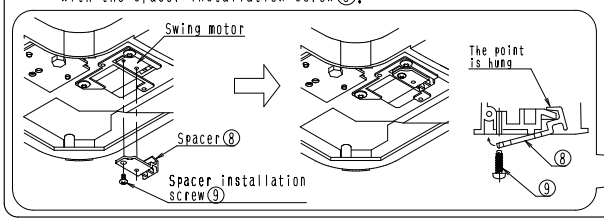

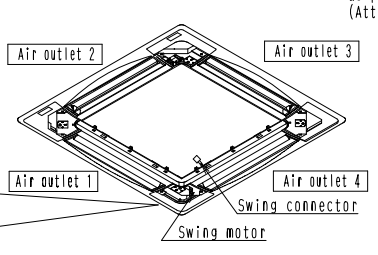

- Attach the horizontal flap moisture absorbing material to the horizontal flaps on the Air outlet as per the figure at bottom. (Attach, matching the color of the panel.)

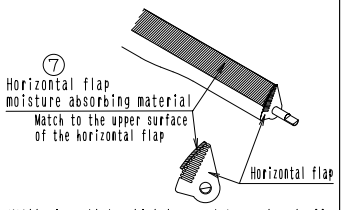

※All air outlets which have not been closed off.

C: 1P089650C

3. FXZQ — Ceiling Mounted Cassette (Compact Multi Flow) Type

3.1 BYFQ60B8W1 — Decoration Panel

Installation

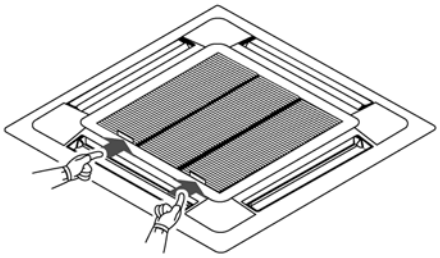

1

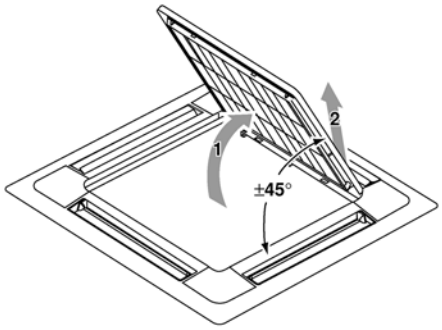

2

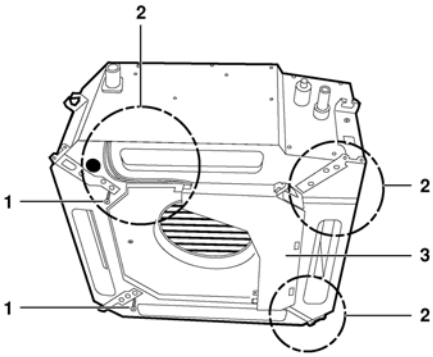

3

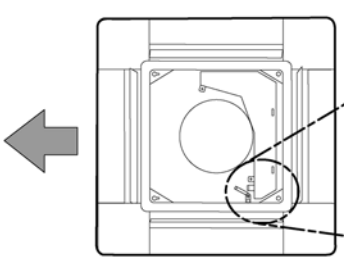

4

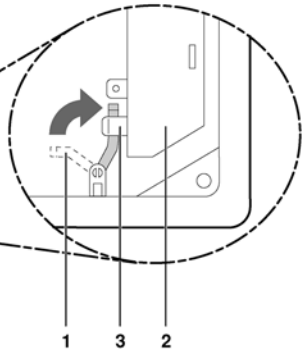

5

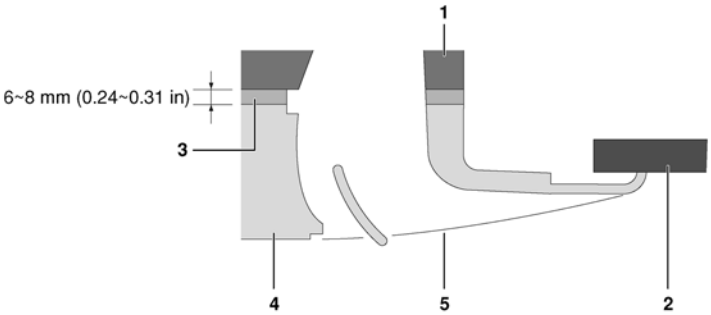

6

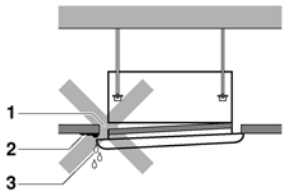

7

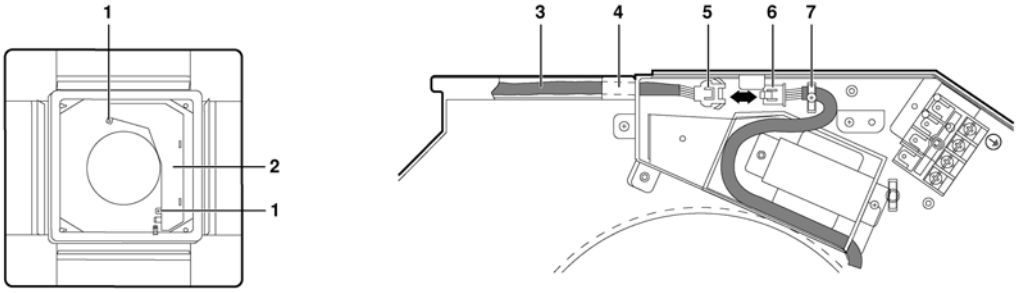

8

4PW42160-1

DAIKIN

BYFQ60B8W1
BYFQ60B8W1U

Decoration panel

Installation manual

Read this manual attentively before installation. Do not throw it away. Keep it in your files for future reference.

Improper installation or attachment of equipment or accessories could result in electric shock, short-circuit, leaks, fire or other damage to the equipment. Be sure only to use accessories made by Daikin that are specifically designed for the use with the equipment and have them installed by a professional.

If unsure of installation procedures or use, always contact your dealer for advice and information.

Before installation

- Leave the unit inside its packaging until you reach the installation site.
- Refer to the warning symbols on the unit.

Rotary fan

Cut off the main power before opening the grille.

- Refer to the installation manual of the indoor unit for items not described in this manual.

NOTE **To the installer**

Be sure to instruct the customer how to properly operate the system showing him or her the operation manual of the indoor unit.

Accessories

Installation manual	
Screws (4x)	

Preparation before installation

For this unit, you are able to select air flow directions. To discharge air in 2 or 3 directions, it is necessary to purchase the optional blocking pad kit.

Handling of the decoration panel

To prevent any damage to the decoration panel, take care of the following:

- Never place the panel with the front facing down.
- Never let the panel lean against a wall.
- Never put it down on a projecting object.
- Never touch or put pressure on the swing flap in order to prevent malfunction of the swing flap.

Preparing the decoration panel for installation

1 Remove the suction grille from the decoration panel.

- Push the suction grille lever in the direction of the arrow and open the grille. (See figure 1)
- Detach the suction grille from the decoration panel by lifting the grille up approximately 45 degrees so the grille can be removed. (See figure 2)

Installation of the decoration panel to the indoor unit

Refer to the installation manual of the indoor unit for details on installing the indoor unit.

1 Hold the decoration panel against the indoor unit by matching the piping side and drain side marks on the decoration panel with the position of the piping section and drain section of the indoor unit.

2 Install the decoration panel.

1 Make sure that the swing flap motor lead wire does not come out of the groove for routing the wire inside the indoor unit (3 locations). If it has, put it back in. (Connecting the decoration panel with the wire out of the groove may cause water leakage.)

2 Provisionally tighten the 2 supplied screws approximately 5 mm (0.2 in) into the indoor unit at the side opposite the switch box. (See figure 3)

1 Supplied screws
2 Groove for wire routing
3 Switch box

3 Slide the panel in the direction of the arrow, matching the 2 attachment holes ( ) over the provisionally tightened screws. (See figure 4)

4 Turn the decoration panel lever at the side of the indoor unit switch box over the hook located on that switch box. (See figure 5)

1 Lever
2 Switch box
3 Hook

5 Attach the remaining screws and tighten all 4 screws until the thickness of the sealing material between the decoration panel and the indoor unit is reduced to 6~8 mm (0.24~0.31 in). (See figure 6)

1 Indoor unit
2 Ceiling
3 Sealing material
4 Decoration panel
5 Air outlet

Precautions

- Improper tightening of the screws (see figure 7) may cause air to leak into the unit and air to escape between the ceiling and the decoration panel (1), resulting in contamination (2) and dew formation (3).
- If there is a gap remaining between the ceiling and the decoration panel after tightening the screws, re-adjust the indoor unit body height.

3 Wiring of the decoration panel (See figure 8)

1 Screws (2)
2 Switch box
3 Swing flap motor lead wire
4 Hang the swing flap motor lead wire on this tab
5 Connector of the decoration panel swing flap motor
6 Connector of the indoor unit
7 Clamp
Pass the swing flap motor lead wire through the clamp as shown. After connection, store the connector inside the switch box.

1 Remove the switch box cover after making sure that the power to the unit is off.
2 Connect the connectors of the swing flap motor lead wire.
3 Put the switch box cover back in place and fix it with the 2 screws again.

- If the connectors are not connected properly, the swing flap will not work.
- Make sure that the swing flap motor lead wire is not caught between the indoor unit and the decoration panel.

INSTALLATION OF THE SUCTION GRILLE

Install the suction grille by reversing the procedure shown in "Preparing the decoration panel for installation" on page 1.

- The suction grille may be installed in 4 directions by simply turning it 90 degrees.
- Change the direction when adjusting the direction of the suction grille of multiple units or to comply with the demands of the customer.

NOTE Be careful not to get the swing flap motor lead wire get caught when installing the suction grille.

3.2 KDBH44BA60 — Sealing Material of Air Discharge Outlet

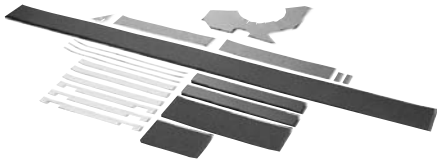

Component

Name	Sealing material	Tape for fixing the sealing material	Insulation for side plate			Moisture absorber for bell-mouth
Quantity	2 pieces	2 pieces	1 piece	1 piece	1 piece	1 piece
Shape	①	②	③-1 100mm×179mm	③-2 100mm×370mm	③-3 100mm×1538mm	④

Name	Moisture absorber for swing flap		Moisture absorber for panel edge	Moisture absorber for attached point	Moisture absorber for flesh air intake
Quantity	3 pieces	3 pieces	3 pieces	1 piece	2 pieces
Shape	⑤ 25mm×361mm	⑥	⑦ 8mm×450mm	⑧	⑨ 50mm×20mm

❶ The direction of air discharge and the positioning of sealing material

(1) Selection of the air outlet

- Select the direction of air discharge from the following table according to the location of the indoor unit.
  Refer to ❷ **Setting for indoor unit** for setting position number.
  Refer to the installation manual attached to the indoor unit for selection of installation location.

Caution Never select the direction of air discharge other than the following pattern.
(You may have a condensation problem.)

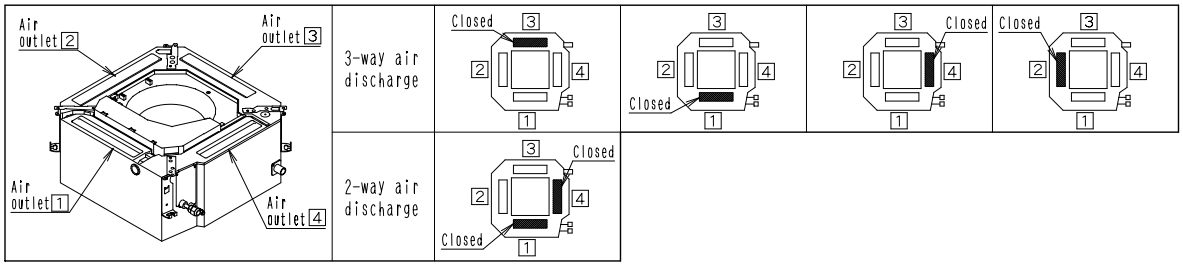

(2) Prepare the sealing material ① and the tape for fixing the sealing material ② according to the air outlet No. to be closed.

- Cut off the sealing material ① and the tape for fixing the sealing material ② along the perforated lines (marked ———).
- Adhere the sealing material ① to tape for fixing the sealing material ② .
  (Make sure that the sealing material ① is placed at the center of the tape for fixing the sealing material ② .)

Example) For closing the air outlet 3

< How to prepare the sealing material ① and tape for fixing the sealing material ② >

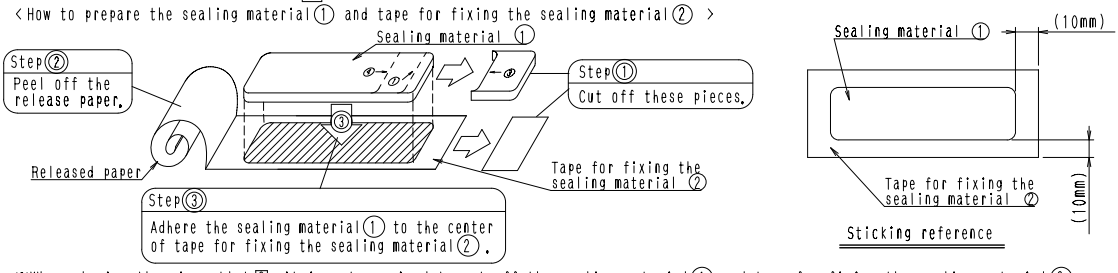

※When closing the air outlet 2 , it is not required to cut off the sealing material ① and tape for fixing the sealing material ② .

(3) Adhere the sealing material ① and tape for fixing the sealing material ②
prepared according to the procedure (2) to the indoor unit air outlet.

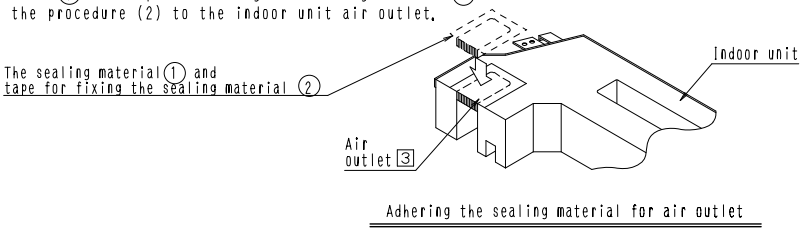

Adhering the sealing material for air outlet

1P109292B

❷ Setting for indoor unit

It is required to make a field setting from the remote controller according to how the indoor units are installed.
The direction of air discharge must also be set by the remote controller.

- The 3 different kinds of setting such as "Mode number", "First code number" and "Second code number" must be made by the remote controller.
- Refer to the item of "Field setting" in the operation manual of the remote controller for the setting procedure.

Setting according to number of use of the air discharge.
Check the setting position number corresponding to the direction of air discharge in a table, below.

(Content of setting)

(Number of use of air outlets)	Mode number	First code number	Second code number
3-way air discharge	13(23)	1	02
2-way air discharge			03

❸ Installation of the insulation

Please turn off the power supply for safety absolutely, before you do installation of the decoration panel and affixation of insulation and connected work of swing conector.

(1) Adhere the insulations for side plate ③ in position, referring (Fig. 1) (Fig. 2).
(2) Adhere the moisture absorber for bell-mouth ④ on the inner surface of the bell-mouth.
See (Fig. 1) (Fig. 2) (Fig. 3).

Fig. 1

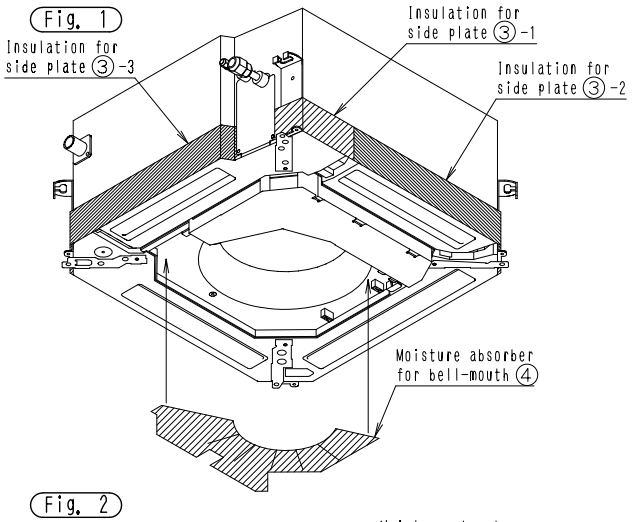

Fig. 3

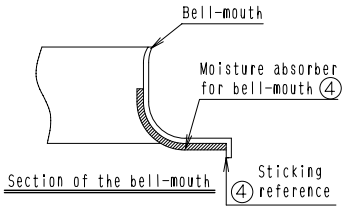

Fig. 2

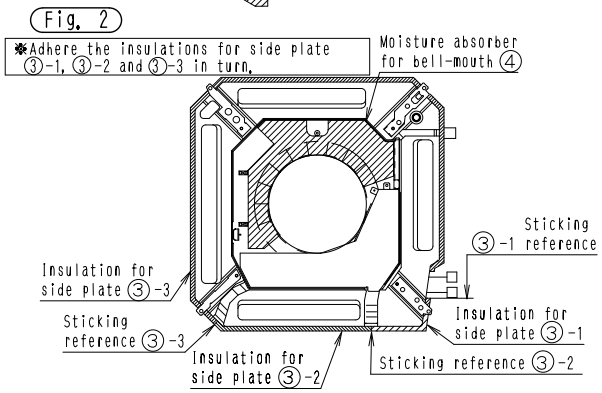

C: 1P109292B

(3) Confirm the air outlet and NO. not to be closed on the panel. See (Fig. 4).
(4) Adhere the moisture absorbers for swing flap ⑤⑥ aligning with the upper edge of the swing flap on the air outlet. And, adhere the moisture absorbers for panel edge ⑦ with the panel edge on the air outlet. See (Fig. 5).
(5) Adhere the moisture absorber for attached point ⑧ with the attached point to indoor unit between the air outlet 2 and 3. And, adhere the moisture absorbers for flesh air intake ⑨ with the flesh air intake hole. See (Fig. 6).

Fig. 4

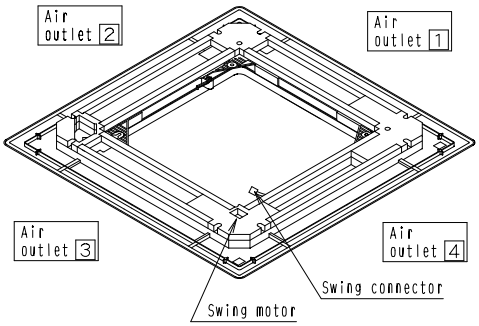

Fig. 5

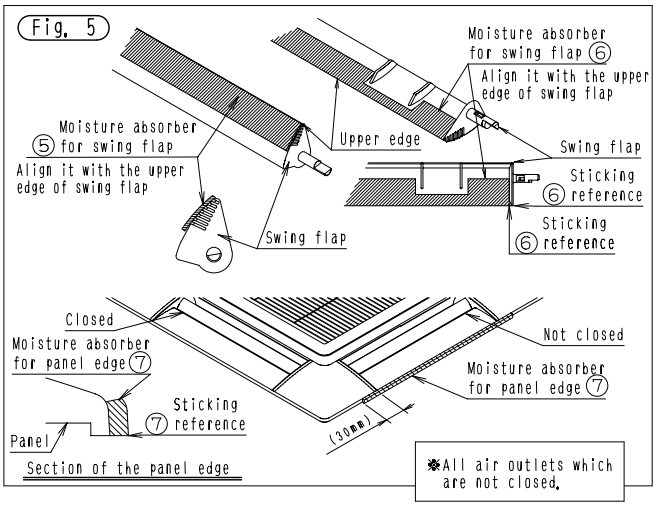

Fig. 6

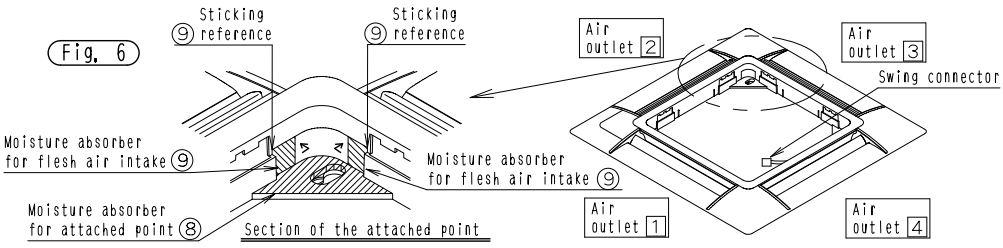

1P109292B

3.3 KDBQ44BA60A — Panel Spacer

Item \ Model		KDBQ44BA60A
Applicable decoration panel		BYFQ60B8W1
Exterior		White
Material		Outside frame: Resin Insulation: Foam polyethylene
Component Parts		Panel spacer. Insulation. Sealant. Mounting screws. Installation manual.
Mass	kg	1.5

- Using the panel spacer in areas of the ceiling with limited space makes it possible to install the air conditioner.
- Hides the gap between the decoration panel and the ceiling.

Dimensions **Installation** Unit (mm)

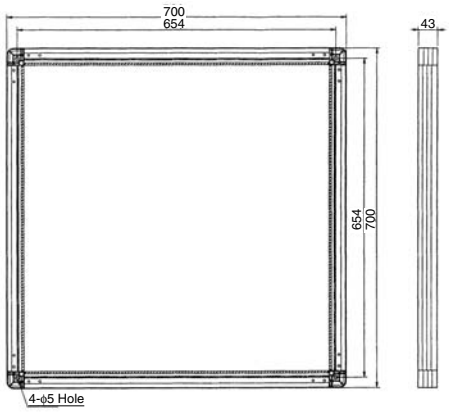

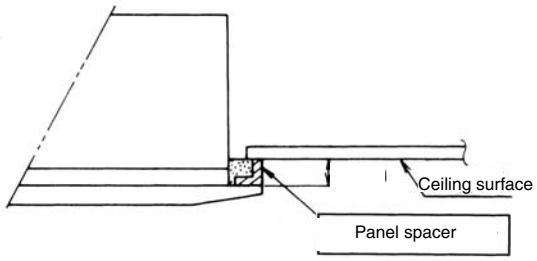

FFQ/FXZQ + KDBQ44BA60A Unit (mm)

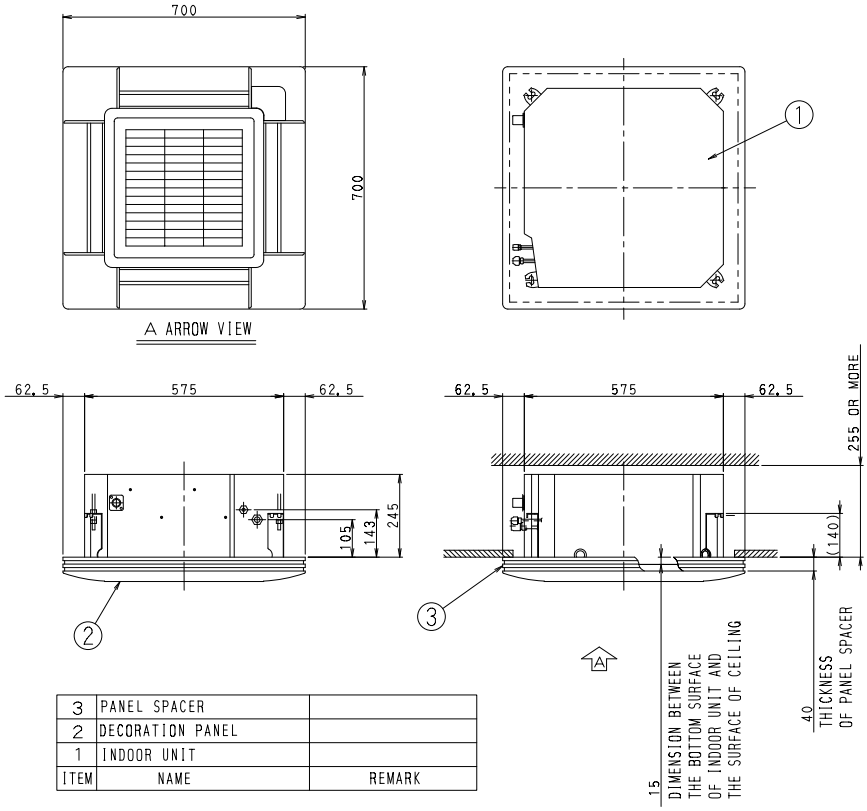

ITEM	NAME	REMARK
3	PANEL SPACER	
2	DECORATION PANEL	
1	INDOOR UNIT	

3D041038A

Installation Manual

Daikin Air Conditioners Panel Spacer Installation manual

KDBQ44BA60A Caution : Before installation, read this safety instruction. 1P107764-1C

Combination table

Panel spacer	KDBQ44BA60A
Decoration panel	BYFQ60B8W1

Caution

- When the Panel Spacer is installed, it is not possible to have 2-way air outlet.
- Refer to the installation manual for both indoor unit and the Panel spacer for its installation.

Contents of kit

Check if following parts are included with your kit.

Name	Panel spacer frame	Resin corner part	Fixing metal	Screw
Quantity	4 PCS.	4 PCS.	4 PCS.	28 PCS.
Shape・number	① 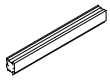	② 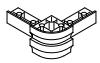	③	④ M4×12 Tapping screw (Class 2)

Name	Sealing material	
Quantity	2 PCS.	2 PCS.
Shape・number	⑤ 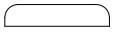	⑥ 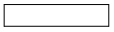

❶ Preparation of the decoration panel

- Handle the decoration panel with care.

Never place the panel face down, or lean the panel against wall or place on the projective object.
(It causes the dent or damage of the surface of the panel or damage of swing motor.)

(1) Remove the suction grill from the decoration panel.
(Refer to the installtion manual of the decoration panel how to remove.)

(2) Place the panel face down on the corrugated board or the vinyl sheet to protect the surface of the panel.

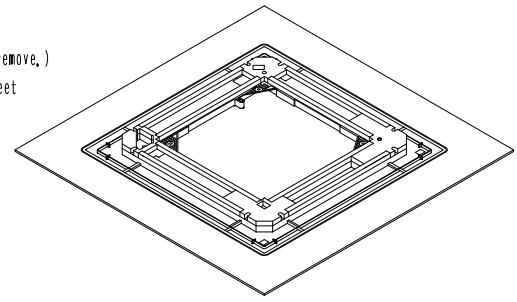

❷ Installation of the indoor unit

Adjust the height of the indoor unit.

Be sure the piping will not contact with the ceiling joist etc. after adjusting the height.

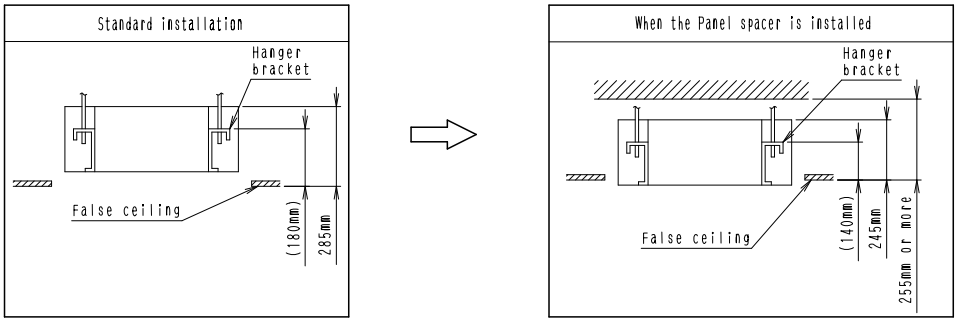

C: 1P107764C

❸ Assembly of panel spacer

(1) Assemble the panel spacer frame ① and the plastic corner joint ② temporarily.

(2) Fix with the screws ④ from the top. (4 screws in each corner)

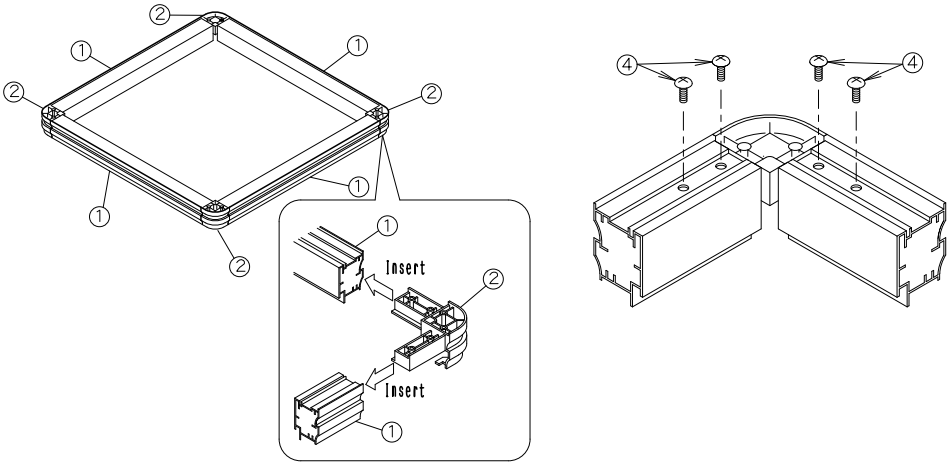

❹ Fixing to the decoration panel

(1) Set the fixing metal ③ on each corner with screws ④.

(2) Place the panel spacer assembled in item ③ Assembly of panel spacer of the above on the outer frame of the decoration panel.

(3) Fix the panel spacer to the fixing metal ③ with screws ④ (4 portions).

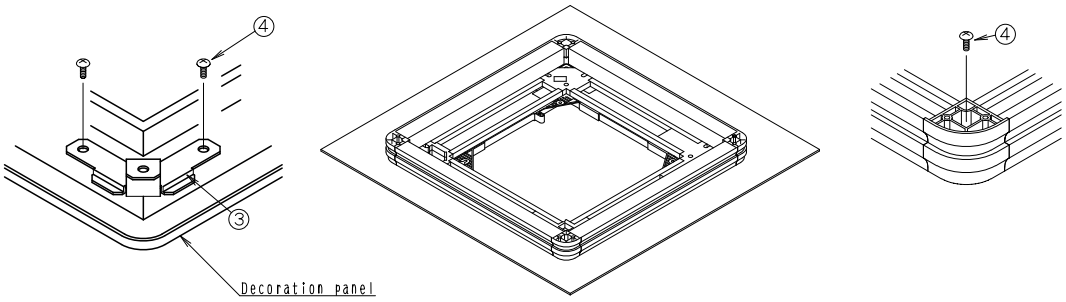

❺ Adhesion of the sealing material

Adhere the sealing material ⑤ ⑥ on the upper face of the panel spacer in the order of ⑤ and ⑥.

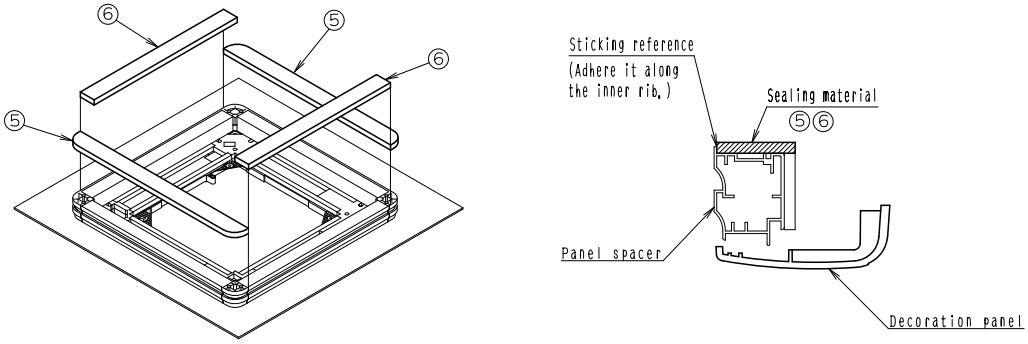

❻ Installation of the decoration panel

Install the decoration panel to the indoor unit according to the installation manual of decoration panel.

The panel spacer is not firmly fixed to the decoration panel, so that never hold the panel spacer directly or lean the decoration panel extremely.

1P107764C

3.4 KDDQ44XA60 — Fresh Air Intake Kit (Direct Installation Type)

Installation Manual

Daikin Air Conditioners Fresh Air Intake Kit (Duct Flange) Installation manual

KDDQ44XA60 Caution: Before installation, read this safety instruction.

Remarks:

1. This kit can be installed to the Ceiling mounted cassette type (Multi-flow).
2. When installing this kit, duct (Nominal dia. : ϕ100) is required on site.

- In case that metal duct is penetrated through wooden walls, make sure the duct and the wall electrically insulated.
- Install the duct inclined downwardly to outdoor so that the rain may not get into the duct. (Inclination 1/100 to 1/50)
- To avoid birds, small animals or insects getting inside the duct, make sure to install net where it contacts the outside air.

Contents

Prior to installation, make sure you have the complete kit of parts.

Name	① Duct flange	② Screws	③ Insulation for duct flange	④ Insulation for opening of unit	⑤ Installation manual
Q'ty	1 piece	4 pieces	1 piece	1 piece	1 piece
Shape		M4×12			

Necessary tools

Philips head screw driver, nipper, cutter etc.

1 Installation procedures of duct flange

1. Cut off the knockout hole on the side plate. (Fig. 1)

The knockout hole is opposite to ref. pipe.

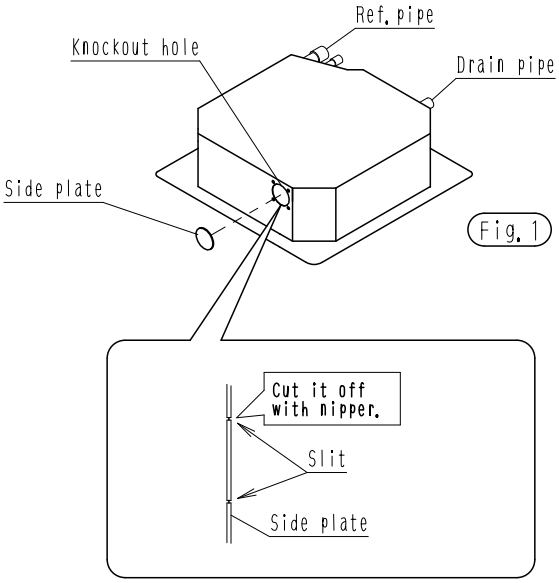

Fig. 1

2P108307A

2. Adhere the insulation④ for opening of unit to the opening. (Fig. 2)

Put the insulation ④ to be suitable for the hole of the insulation ④ and hole of the indoor unit.
However, put the insulation ④ so as not to conceal the screw hole of the indoor unit.

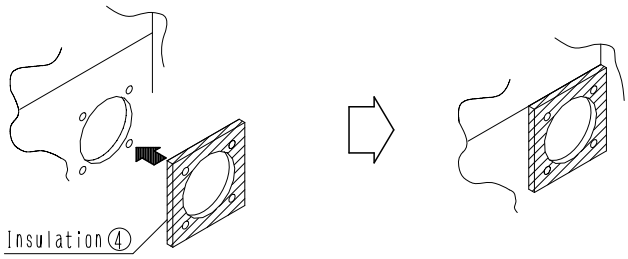

Fig. 2

3. Install the duct flange① with screws② (M4×12, 4 screws) to the opening and adhere the insulation③ (Fig. 3)

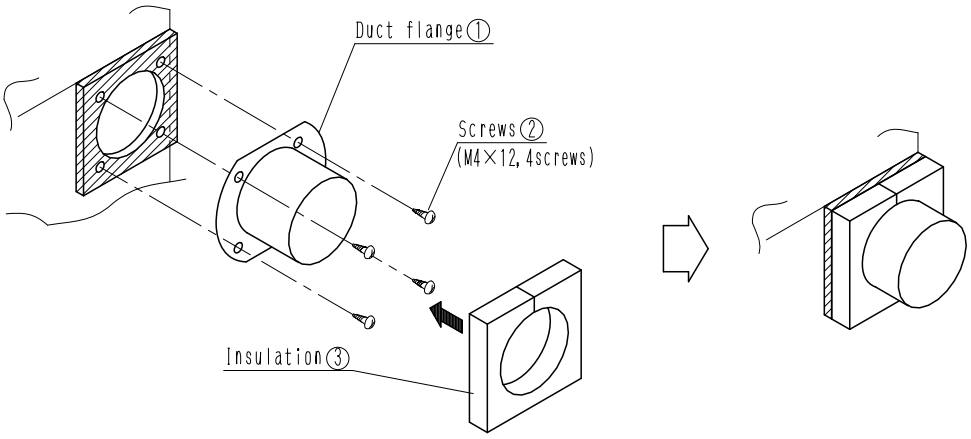

Fig. 3

❷ Installation procedures of duct <Nominal diameter of duct: φ100>

1. Connect the duct to the duct flange. (Flange fits inside the duct.) (Fig. 4)
2. After connection, wrap vinyl tape (field supply) around the duct connection to prevent air leak.

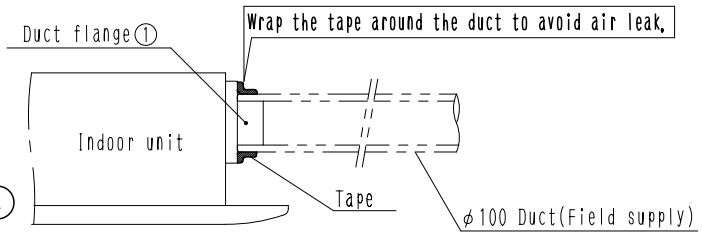

Fig. 4

Precaution

- All ducts must be completely insulated.
- Do not do the followings when installing duct.

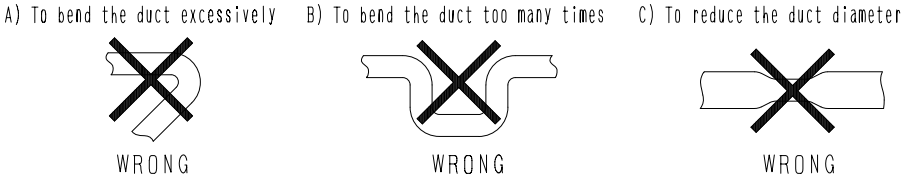

2P108307A

3.5 KAFQ441BA60 — Replacement Long-life Filter

Dimensions

Unit (mm)

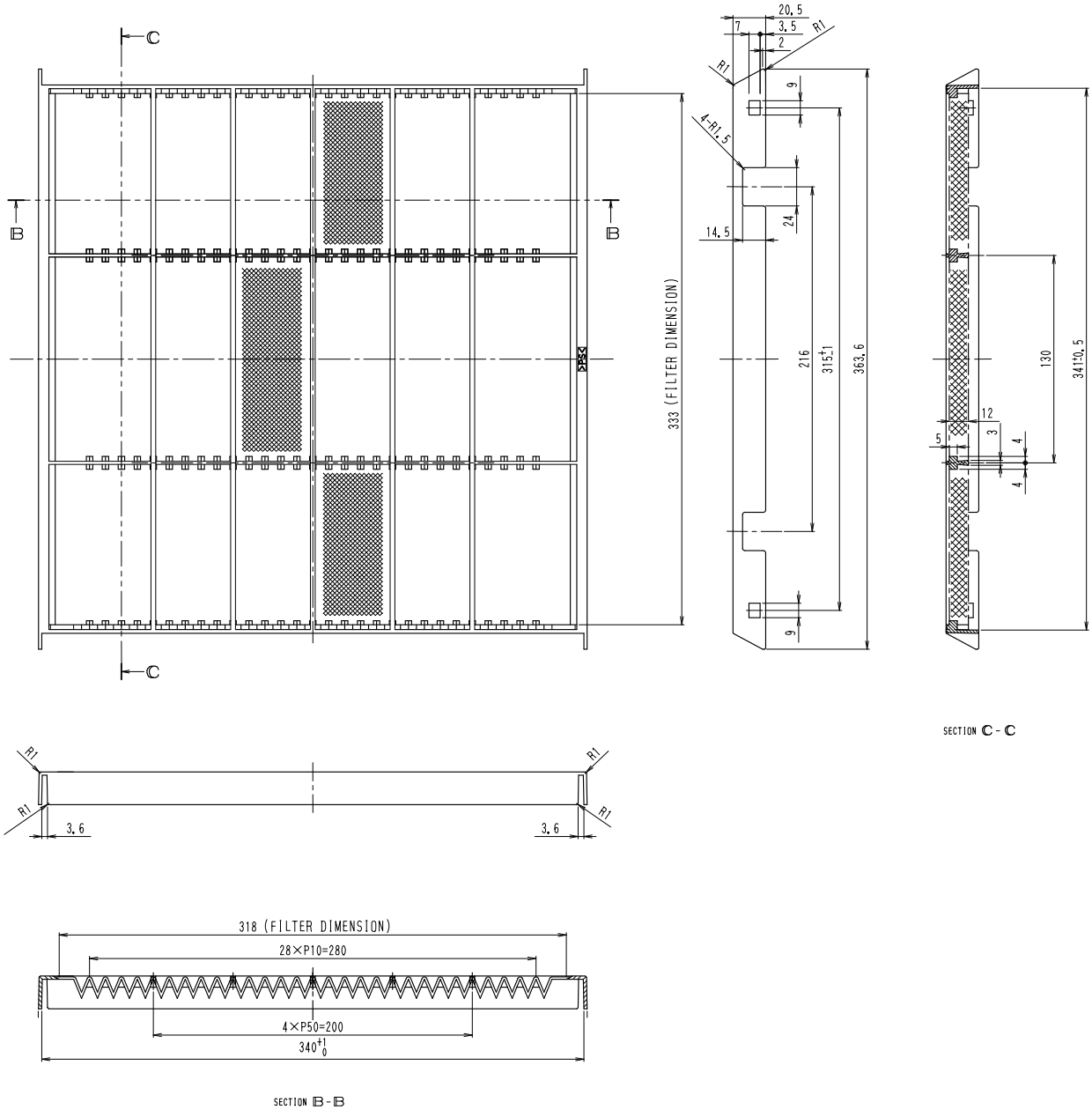

2P100214B

4. FXUQ-A — 4-Way Flow Ceiling Suspended Type

4.1 KDBTP49B140 — Decoration Panel for Air Discharge

Dimensions Unit (mm)

Specifications
Material: Polycarbonate (with adhesive back)
Casing color: Fresh white (6.5Y/9.5/0.5)
Mass: 0.2 kg

Compornent parts
Decoration panel x 2 sets and Installation Manual

*This kit includesmaterials that matches KDBHP49B140 (sealing material of air discharge 2 outlet) with the fresh-white indoor unit in casing color.

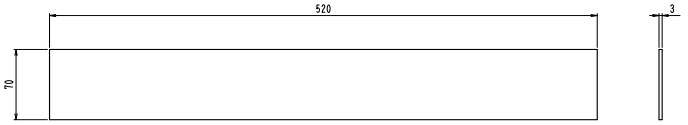

J: D3K08780A

Installation Manual

Contents of kits Make sure this kit contains the following parts.

Name	Decoration panel for sealing material of air discharge	Installation manual
Shape	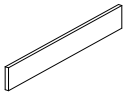	
Quantity	2 sets	1 sheet

⚠ Precaution

- The kit requires sealing material provided with the main unit or KDBHP49B140 (optional sealing material of air discharge 2 outlet).
- The kit attaches to models of 4-way flow ceiling suspended type.
- At the time of attachment, refer to the Installation Manual, which is provided with the indoor unit and the Instruction Manual for the sealing material of air discharge 2 outlet.

1 Attachment onto the indoor unit

(1) Attach the decoration panels onto the sealing material.
Refer to the illustration below for the attachment position.
(Refer to the Installation Manual, which is provided with the indoor unit, and the Installation Manual for the sealing material of air discharge 2 outlet when attaching the sealing material).

Note ● Slowly attach the decoration panels for sealing material of air outlet in order to purge air and eliminate unnecessary clearance.

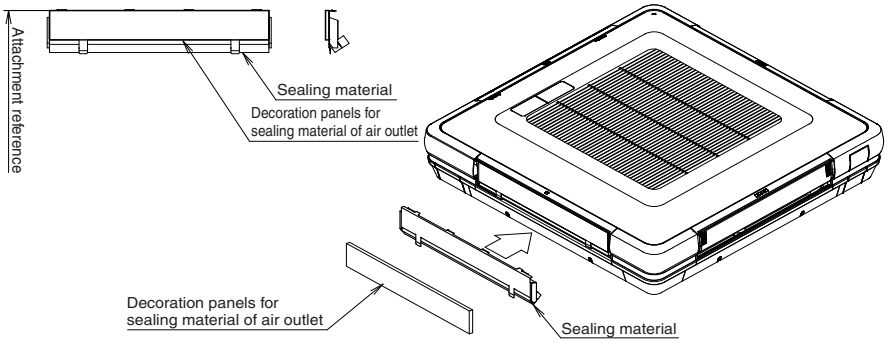

How to clean decoration panels for sealing material of air outlet

- Wipe the panels with a soft cloth.
- If the stain is persistent, wipe the surface with a cloth wrung out with water or mild detergent, and rub the surface with a dry cloth.

Note
- Do not use gasoline, benzine, thinner, scouring powder, or commercially available liquid insecticide. Otherwise, the discoloration or deformation of the panels may result.
- Do not use hot water at 50˚C or more. Otherwise, the discoloration or deformation of the panels may result.

J: 3P318089A

4.2 KDBHP49B140 — Sealing Member of Air Discharge Outlet

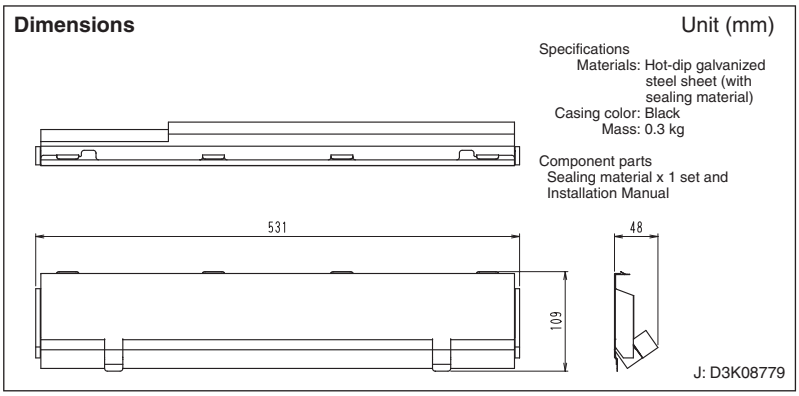

Installation Manual

In the case of two flow directions, be sure to mount the kit so that the kit will be ramped down by 1˚ from the horizontal (0˚) level toward the drain piping side.

Contents of kits — Make sure this kit contains the following parts

Name	Sealing material	Installation manual
Shape		
Quantity	1 set	1 sheet

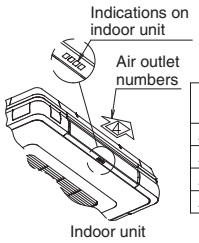

Air outlet number	Indication on indoor unit
Air outlet 1	□
Air outlet 2	□□
Air outlet 3	□□□
Air outlet 4	□□□□

Precautions

- The kit attaches to models of 4-way flow ceiling suspended type.
- At the time of attachment, refer to the Installation Manual, which is provided with the indoor unit and the Installation Manual for the sealing material of air discharge 2 outlets.
- Each arrow symbol indicates a flow direction.
  Refer to the table below for the air outlet numbers (*) and corresponding indications on the indoor unit.
- The kit can be mounted to air outlets 1 , 3, and 4.

[Airflow pattern] Viewed from the ceiling side

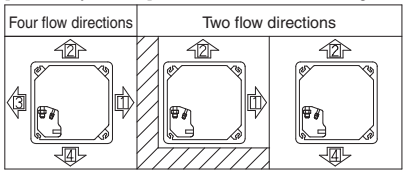

1 Attachment onto the indoor unit

(1) Remove the horizontal blade of the air outlet to be closed (refer to Fig. 1).
① Hold the horizontal blade with both hands as shown in Fig. 1 so that unnecessary force will not be imposed on the bearings, and dismount the horizontal blade from the bearing side where the motor is not located.
② Turn over the horizontal blade, unhook the claw of the bearing on the motor side, and dismount the horizontal blade while lifting up the horizontal blade.

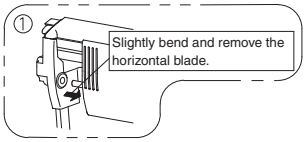

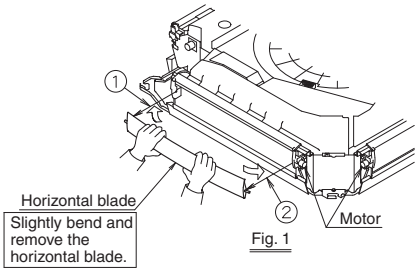

Fig. 1

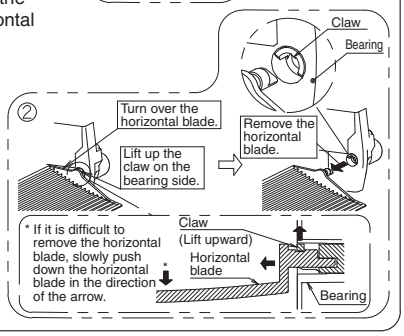

J: 3P313173A

(2) Mount the sealing material to the air outlet (refer to Fig. 2).
① Insert the protrusion of the sealing material into the clearance between the decoration panel (upper) and the heat insulating material.
② Insert the return bend portions on both ends (two portions) of the sealing material into the clearance between the decoration panel (lower) and drain pan until the return bend portions snap. At that time, insert the return bend portions while slightly pushing up the ends of the decoration panel (lower).
If it is difficult to insert the return bend portions, loosen either the left screw or right screw on the decoration panel (lower).
③ Insert the return bend portions on both ends (two portions) of the sealing material into the clearance between the decoration panel (lower) and drain pan until the return bend portions snap, and fix the sealing material.
④ Check that the steel plate part of the sealing material does not protrude from the front end edge of the decoration panel (lower).

Mount the sealing material so that there will be no clearance between the sealing material and the indoor unit.
Otherwise, air leakage or dew condensation may result.

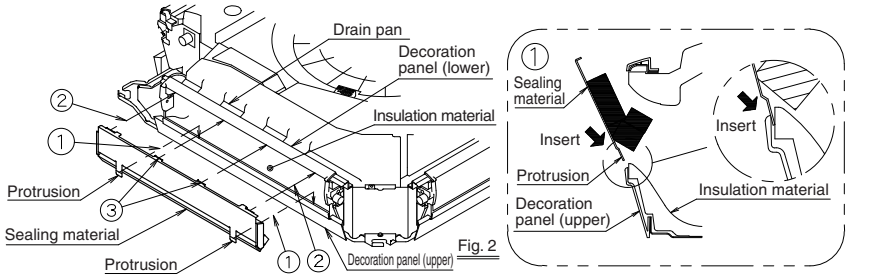

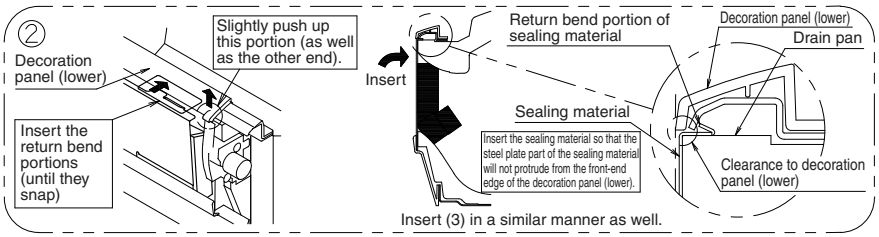

* If it is difficult to insert the sealing material, loosen the left and right screws on the decoration panel (lower). Be sure to tighten the screws again after the sealing material is mounted.

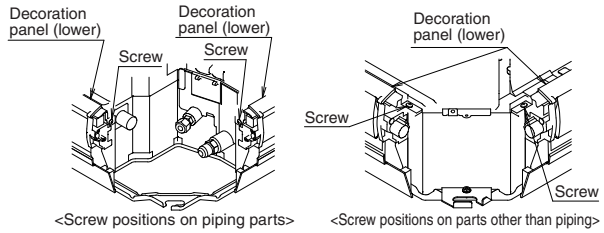

<Screw positions on piping parts> <Screw positions on parts other than piping>

❷ Field Settings with Remote Controller

Airflow direction settings

- When the kit is installed, field settings will be required for two flow directions. Refer to the information on field settings in the Installation Manual, which is provided with the remote controller, and select Second code No. as shown below.

Setting	Mode No.	First code No.	Second code No.
Three flow directions	13 (23)	1	02
Two flow directions			03

(The setting position is set to 01 for four flow directions at factory setting.)

J: 3P313173A

5. FXC (Q) — Ceiling Mounted Cassette (Double Flow) Type

5.1 BYBC32 / 50 / 63 / 125G- W1 — Decoration Panel

BEFORE INSTALLATION

PRECAUTIONS

1.Refer also to the installation manual attached to the indoor unit.

2.Handling of decoration panels.

- Never place the panel facing down nor lean it against a wall nor leave it on a projecting object.
- (Otherwise the panel surface may be scratched.)
  Never touch or put pressure on the swing flap.
  (The swing flap may malfunction.)

ACCESSORIES

Panel fixing screw (M5x40)

BYBC32·50·63G-W1·····4pcs.
BYBC125G-W1·····6pcs..

NOTE TO INSTALLER

Be sure to instruct the customer how to properly operate the system showing him/her the attached operation manual.

PREPARATION OF DECORATION PANEL.

- Remove the suction grille and the cushion that is taped on the end of the swing flap.
- Remove the suction grille from the decoration panel.

(1) Hold up one side of the suction grille and hold down the other side.
Slide the suction grille in the direction of arrow.

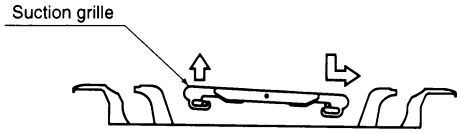

(2) Unhook the held-down side of the suction grille.

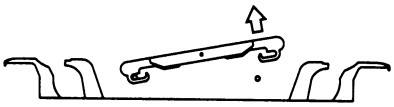

(3) Open the suction grille(by about 45°) and unhook its other side.

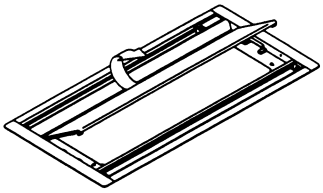

INSTALLATION OF THE DECORATION PANEL TO THE INDOOR UNIT BODY

《Refer to the installation manual attached to the indoor unit for the installation of the indoor unit.》

- Set the decoration panel temporarity.

(1) Temporarily tighten the two decoration panel fixing screws in position in the indoor unit See the figure below.
(Turn in the screws by 10 mm or so.)

(2) Place the decoration panel on the indoor unit with the swing moter at the piping side.

(3) Hook the openings of the decoration panel to the above half-tightened fixing screws.
(Preferably hook first the opening that is opposite the piping side.)

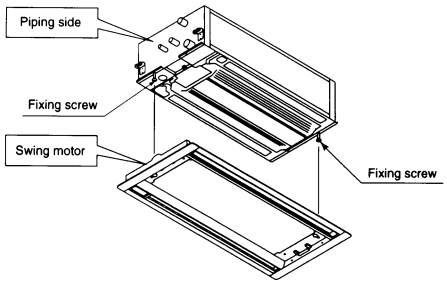

C: 3PA63729-3R

• Fixing the decoration panel.

(4) Tighten further the above two decoration panel fixing screw. And tighten two other decoration panel fixing screws diagonally.

(5) Tighten up all the four screws until there is no gap between the decoration panel and the ceiling.

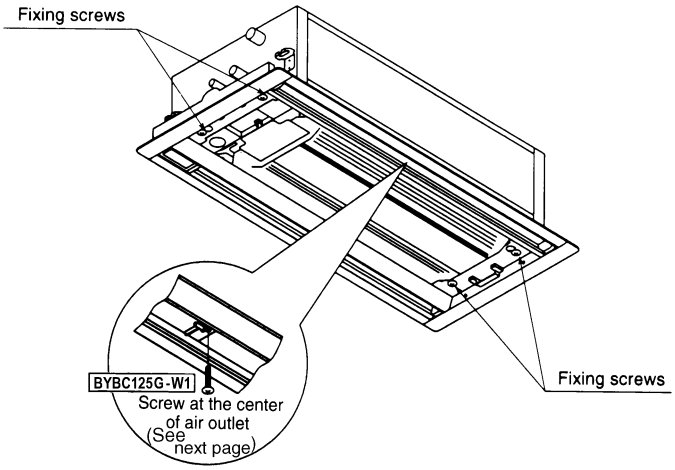

• Make wiring of the decoration panel.

(6) Connect the two connectors of the swing moter lead wire that is laid along the decoration panel. Pass the power supply lead wire through the wire clip.

Be sure to couple these connectors securely. Otherwise the malfunction display (A7) appears on the remote controller.

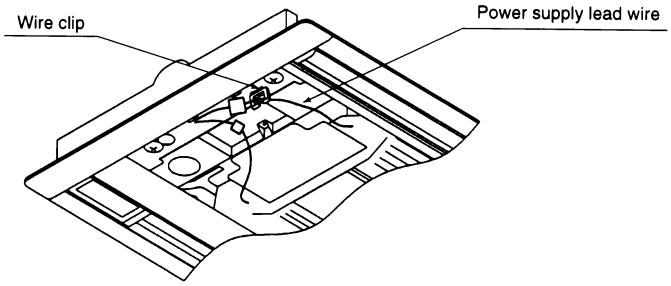

〔**PRECAUTION**〕

A gap between the decoration panel and the ceiling, or between the decoration panel and the indoor unit, may cause dew condensation and stain the ceiling. If any gap is found, readjust the indoor unit height to close the gap.

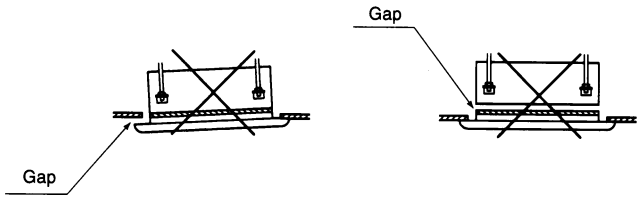

C: 3PA63729-3R

MODEL BYBC125G-W1

On Model BYBC125G-W1, more decoration panel fixing screws can also be applied at two points of the air outlet center.
(Use these screws if a gap is produced lengthwise near the center.)

To apply the screws, remove the swing flap. Take the following steps.

① Remove the swing flap.
Make sure the swing flap is in the horizontal flow position. Push the flap toward the piping side, and the opposite-side and center bearings will come off position. (The swing flap has been factory-set for the horizontal flow. If not in this position, get the indoor unit ready to run and readjust the swing flap angle with the remote controller.)

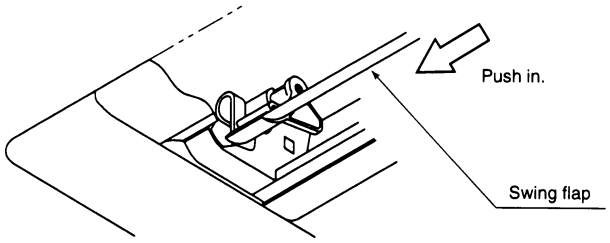

② Apply the decoration panel fixing screws at the center of the air outlet. (See the figure on the preceding page.)
③ Place the swing flap back into position.
Take the reverse steps. Finally make sure that the rib of the swing flap shaft at the piping side fits tight in the decoration panel's groove, and that the opposite-side and center bearings are tight in place.

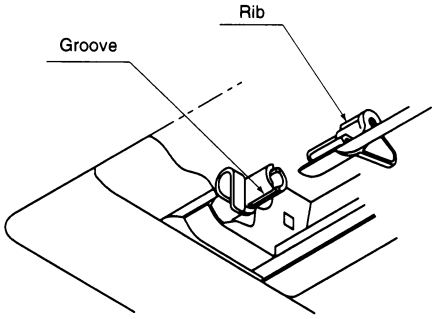

In removing and placing back the swing flap, be careful not to damage the insulation atop both ends of the flap.

INSTALLATION OF SUCTION GRILLE

(1) Hold the suction grille tilled by 45° or so and hook it to the decoration panel pin.
(No direction is specified.)

(2) Hook the anti-fall chains at both sides of the suction grille to the decoration panel holes.

(3) Close the suction grille in the reverse order. Now the decoration panel is ready to use.

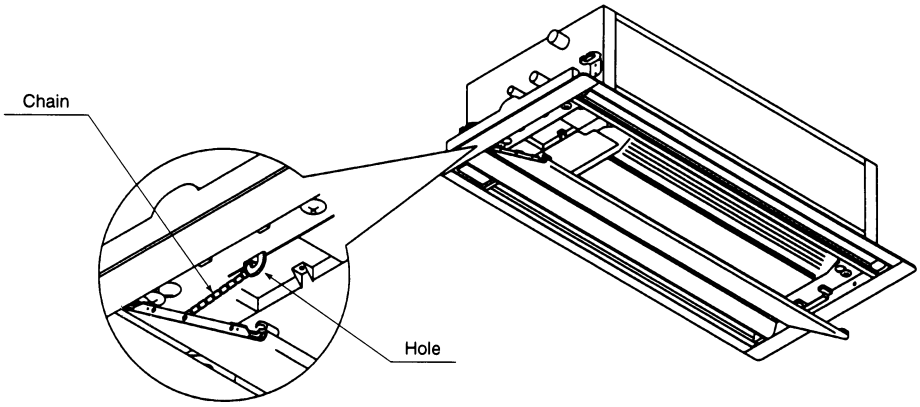

C: 3PA63729-3R

5.2 KAFJ532G36 / 56 / 80 / 160, KAFJ533G36 / 56 / 80 / 160 — High-Efficiency Filter

KAFJ532G56

- Cannot be water-washed for reuse.
- The filter chamber (KDDFJ53G36/56/80/160) is required when the high efficiency filter will be installed.

Dimensions Unit (mm)

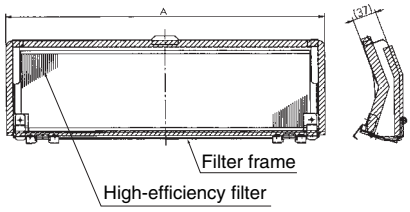

unit:(mm)

Model	A
KAFJ532G36	487
KAFJ532G56	702
KAFJ532G80	887
KAFJ532G160	687
KAFJ533G36	487
KAFJ533G56	702
KAFJ533G80	887
KAFJ533G160	687

J: D3K1637C
J: D3K1638B
J: D3K1639C

Installation

Caution

- For the installation of this kit, the filter chamber is also required. Select the matching filter chamber from the following table.

High efficiency filter		Filter chamber
65%	90%	
KAFJ532G36	KAFJ533G36	KDDFJ53G36
KAFJ532G56	KAFJ533G56	KDDFJ53G56
KAFJ532G80	KAFJ533G80	KDDFJ53G80
KAFJ532G160	KAFJ533G160	KDDFJ53G160

- Be sure to install this kit after installing the indoor unit and the filter chamber.
- For its installation, refer to the installation manual of indoor unit and the installation manual of decoration panel as well.

Contents of kit

Prior to installation check whether you have the complete kit of parts as shown below including the installation manual.

Name	Filter frame (with filter)	Capacitor
Shape		
KAFJ532G36 KAFJ533G36	2 sets	1 piece
KAFJ532G56 KAFJ533G56	2 sets	1 piece
KAFJ532G80 KAFJ533G80	2 sets	2 pieces
KAFJ532G160 KAFJ533G160	4 sets	3 pieces

1. Preparation of the filter frame

- Remove filters from the filter frame.
  Remove the holder by pinching the locking lever and pull out the ribbon.

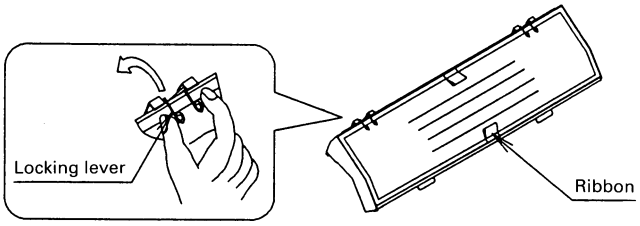

C: 1P009285A

2. Preparation of the indoor unit

- Remove the switch box of the indoor unit and replace the capacitor in the switch box with the replacement capacitor included in the kit. The size of the capacitor varies depending on the model of the indoor unit. Be sure to replace with the proper size of capacitor referring the following table.

You can find 2 capacitors in the optional kit of KAFJ532G80 and KAF533G80 and 3 capacitors in the optional kit of KAFJ532G160 and KAFJ533G160. Select the proper size of capacitor corresponding to the model of the indoor unit and replace it. The remaining capacitor(s) shall not be used.

①Remove the two electrical wiring (white and yellow) from the capacitor.

②Replace the capacitor with the replacement capacitor in the kit.

③Connect the electrical wiring to the capacitor.
(There is no polarity, so that the white and the yellow electrical wire can be connected to either terminal of the capacitor.)

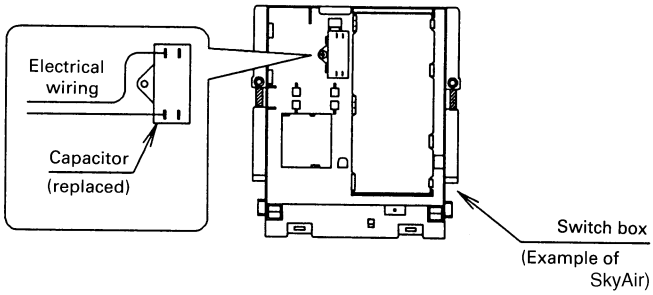

High efficiency filter	Capacity of the replacement capacitor	Model name of indoor unit
		VRV series
KAFJ532G36 KAFJ533G36	2.0 μF	20, 25, 32 Class
KAFJ532G56 KAFJ533G56	2.0 μF	40K, 50 Class
KAFJ532G80 KAFJ533G80	2.0 μF	63 Class
KAFJ532G160 KAFJ533G160	4.5 μF	80 Class
	6.0 μF	125 Class

3. Installation of the filter frame

- Attach the filter frame to the indoor unit, where the original filter was located. (Refer to the operation manual of the indoor unit how to remove the standard filter. The standard filter removed shall not be used.)

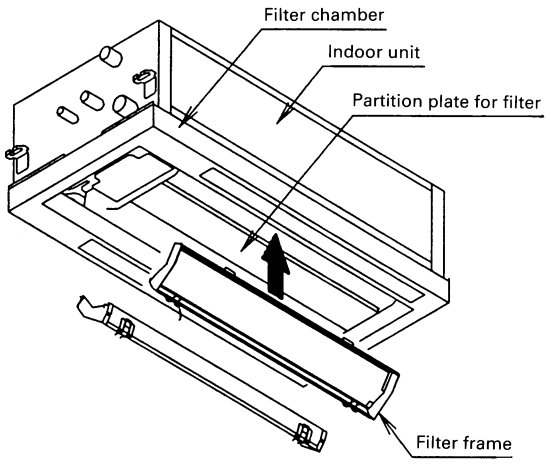

In case of KAFJ532G160 and KAFJ533G160

There are four filter frames of 2 kinds of each having different position of the metal bracket. Install the filter frames to the indoor unit as shown below.

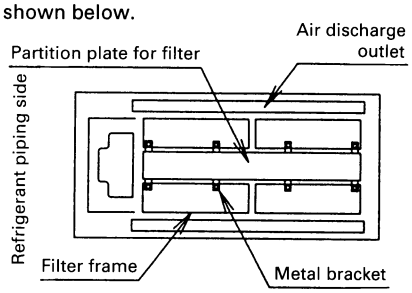

The figure seen from the bottom.

1P009285A

①Loose the screw of the metal bracket located on each end of the filter frame and hook the filter frame temporarily to the partition plate located at the center of the indoor unit.

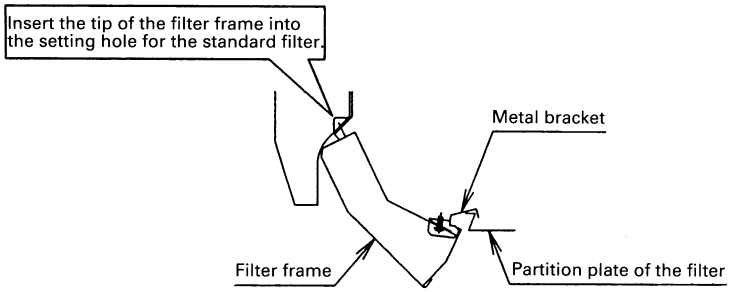

②Fasten the screw of the metal bracket tightly.

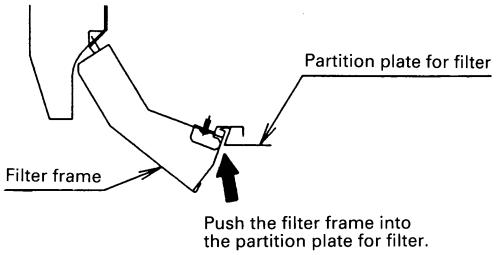

4. Installation of the high efficiency filter

Install the filter in the reverse step of the item 1. of this manual.

1P009285A

5.3 KDDFJ53G36 / 56 / 80 / 160 — Filter Chamber for Bottom Suction

Caution

For the installation of this kit, the high efficiency filter kit is also required. Select the matching high efficiency filter from the following table.

○Refer to the installation manuals for both indoor unit and the decoration panel, when you install the filter chamber.

• Attach insulation. Does not take up time on location.

KDDFJ53G56

Item \ Model		KDDFJ53G36	KDDFJ53G56	KDDFJ53G80	KDDFJ53G160
High-efficiency filter	65 (colorimetric method)	KAFJ532G36	KAFJ532G56	KAFJ532G80	KAFJ532G160
	90 (colorimetric method)	KAFJ533G36	KAFJ533G56	KAFJ533G80	KAFJ533G160
Mass	kg	3.0	3.3	3.6	4.2

Dimensions Unit (mm)

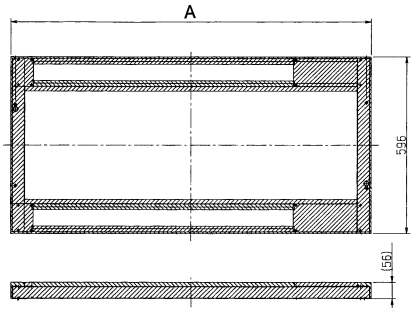

Model	A
KDDFJ53G36	820
KDDFJ53G56	1,035
KDDFJ53G80	1,220
KDDFJ53G160	1,710

D3K1618A

Component parts

Filter chamber
Mounting screw.
Installation Manual

Installation Manual

1. Contents of kit

Prior to installation check whether you have the complete kit of parts as shown below including the installation manual.

Name	Filter chamber	Screws for chamber	Installation manual
Shape		M5 × 40	
Quantity	1 set	KDDFJ53G36·56·80..... 4 pieces KDDFJ53G160..... 6 pieces	1 piece

2. Installation of the indoor unit (Refer to the installation manual included in the indoor unit.)

○ Install the indoor unit
Refer to the drawing on the right for the layout of the indoor unit and ceiling.
(For other details, refer to the installation manual of the indoor unit.)

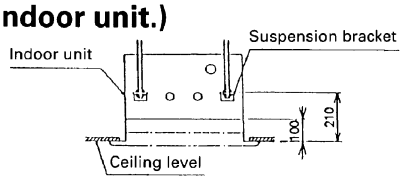

3. Installation of the filter chamber

Caution
○ Be sure to install the filter chamber according to this manual.
○ Be sure to fasten the screws tightly so as no gap between the indoor unit and the chamber, which may cause the air leakage and condensation.

①Remove the panel setting plate from the chamber.
②Set the two screws temporarily to the indoor unit. (fasten the screws about 10 mm)
③Hook the filter chamber to the screws by sliding into and fasten the screws tightly.
④Set the remaining screws and fasten tightly. (4 screws for KDDFJ53G36·56·80, 6 screws for KDDFJ53G160)
⑤Install the panel setting plate removed in ①. (Set the screws temporarily and hook the panel setting plate, and fasten tightly.)

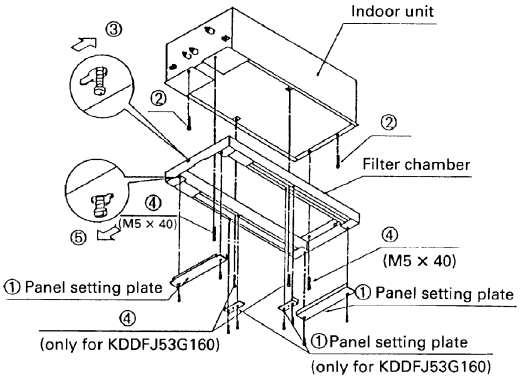

JC: 3K03498A

5.4 KAFJ531G36 / 56 / 80 / 160 — Long-Life Replacement Filter

KAFJ531G56

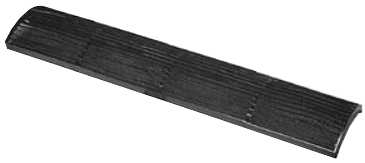

Item \ Model		KAFJ531G36	KAFJ531G56	KAFJ531G80	KAFJ531G160
Average efficiency	%	50 (Gravity method)			
Initial pressure loss	Pa	8 or less			
Final pressure loss	Pa	49			
Life time	h	2,500 hours (Dust particle concentration at 0.15mg/m³)			
Materials		Mildew proof resin net			
Number required per model		2	2	2	4
Mass	kg	0.2	0.3	0.4	0.6

Caution

· Can be water-washed. Can be reused.

Dimensions Unit (mm)

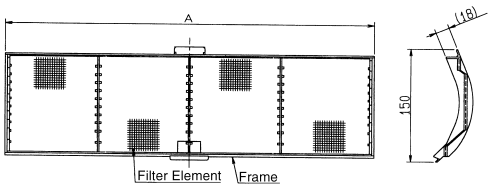

	KAFJ531G36	KAFJ531G56	KAFJ531G80	KAFJ531G160
A	485	700	881	684

J : D3K1607A
J : D3K1608B

6. FXK (Q) — Ceiling Mounted Cassette Corner Type

6.1 BYK45 / 71FJW1 — Decoration Panel

BEFORE INSTALLATION

PRECAUTIONS

- Refer also to the installation manual attached to the indoor unit.

ACCESSORIES

- The box contains this manual and the parts listed below.

Item	Description	Quantity	
		BYK45FJ	BYK71FJ
Decoration panel	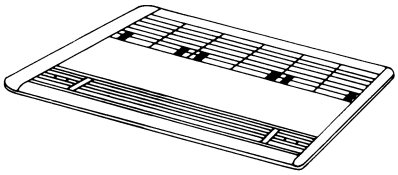	1 set	1 set
Panel fixing screw	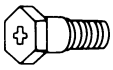 M5 X 35	5 pcs.	5 pcs.
Washer		5 pcs.	5 pcs.

NOTE TO INSTALLER

Be sure to instruct the customer how to properly operate the system showing him/her the attached operation manual.

PREPARATION OF DECORATION PANEL

- Handle the decoration panel with care.

〈 **Never lean the panel against a wall, etc. nor leave it on a projecting object. (For prevention of dents and damages to the panel surface)**
Never grab the discharge grille during the installation work. (For prevention of damage to the discharge grille) 〉

(1) Remove the suction grille from the decoration panel. (See figure below.)
① Slide the suction grille lever and lift it up to one side.

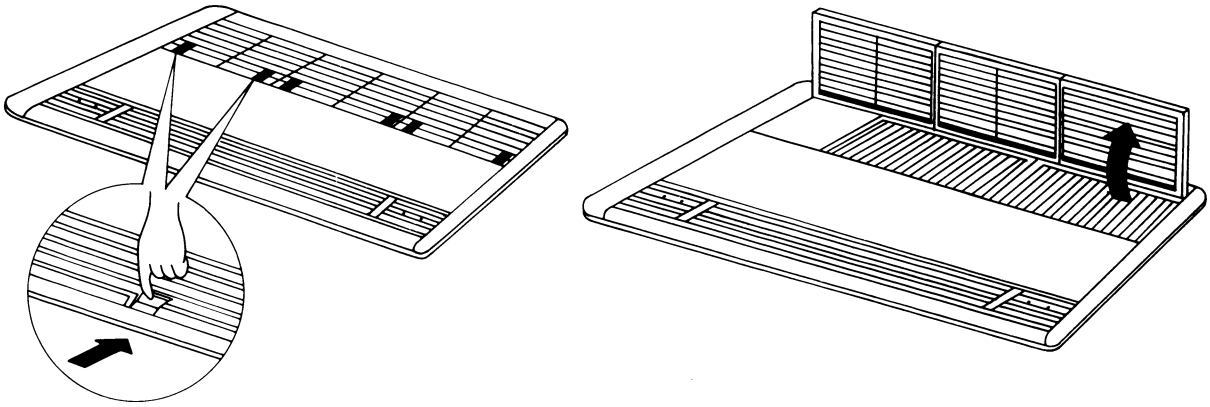

3PA59586-3B

② Unhook the suction grille off from the decoration panel.

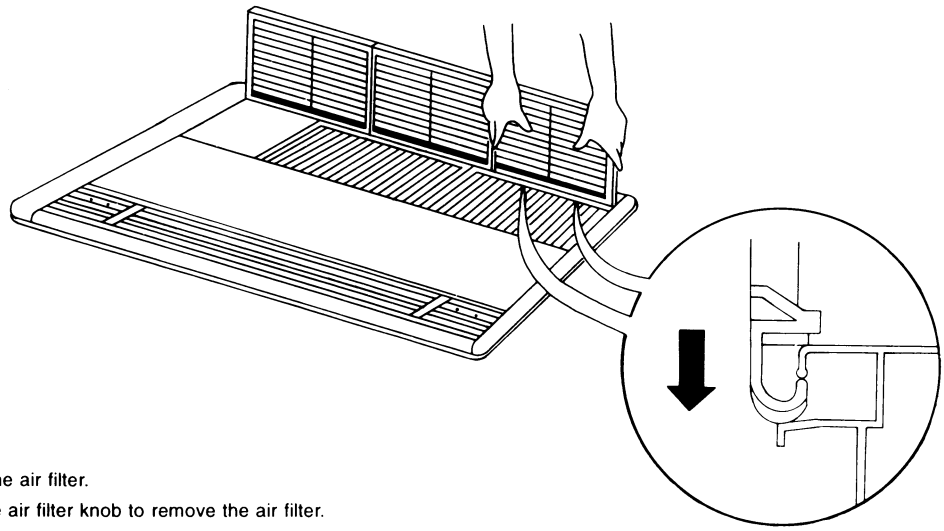

(2) Remove the air filter.
Pull up the air filter knob to remove the air filter.

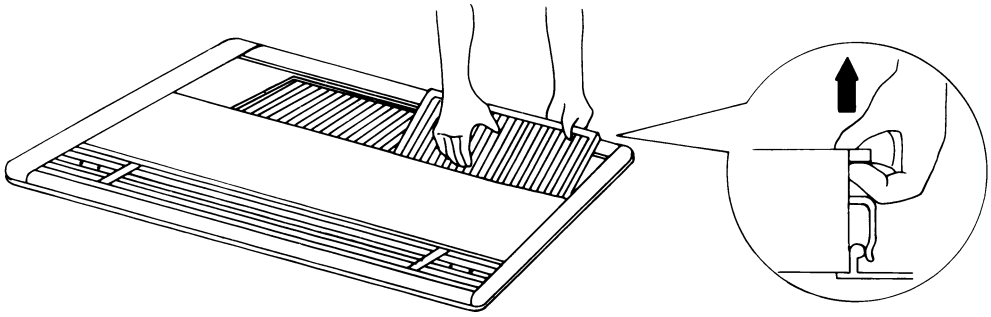

INSTALLATION OF THE DECORATION PANEL TO THE INDOOR UNIT BODY

《 Refer to the installation manual attached to the indoor unit for the installation of the indoor unit. 》

1. Installing the panel

(1) Install the decoration panel to the indoor unit body temporarily.

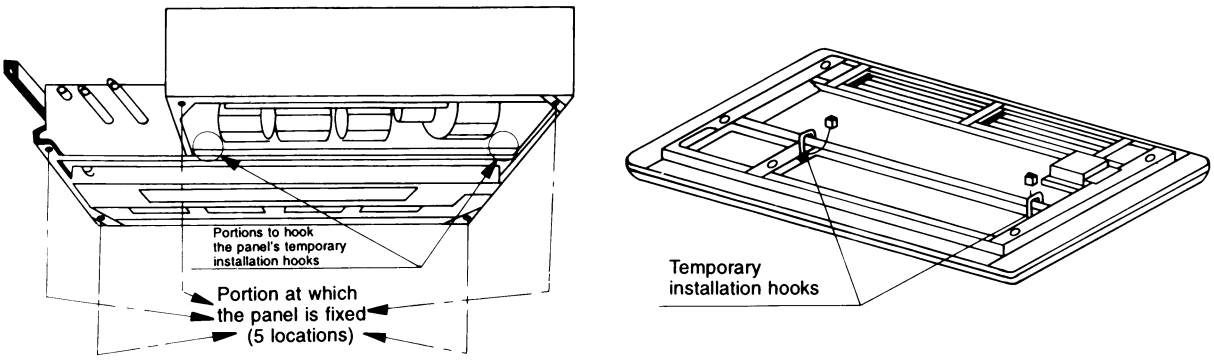

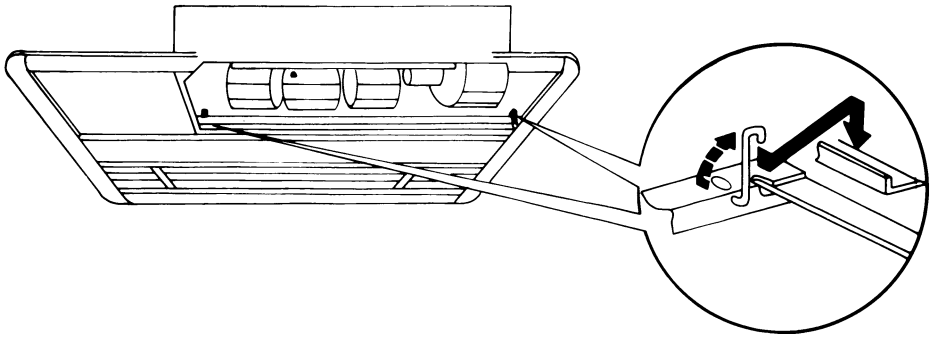

3PA59586-3B

(2) Tighten the panel fixing screws temporarily.

① Open the air outlet decorative covers.

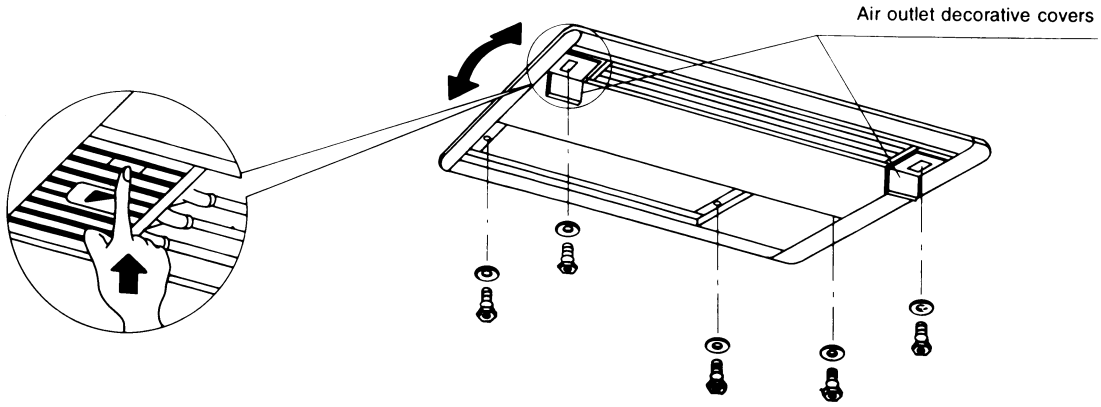

② Put the panel fixing screws (5 pcs.) through the washers and tighten the screws temporarily.

③ Move the panel as indicated by the arrow in the above figure for adjustment so as to make no gap between the panel and the ceiling.

2. Wiring between the indoor unit and the panel

- With the decoration panel temporarily installed to the indoor unit, wire between the indoor unit and the decoration panel. (See figure below.)

(1) Connect the connectors for swing motor and the limit switch on the decoration panel to those on the indoor unit body respectively.

(2) Check that the connectors are of the same color.

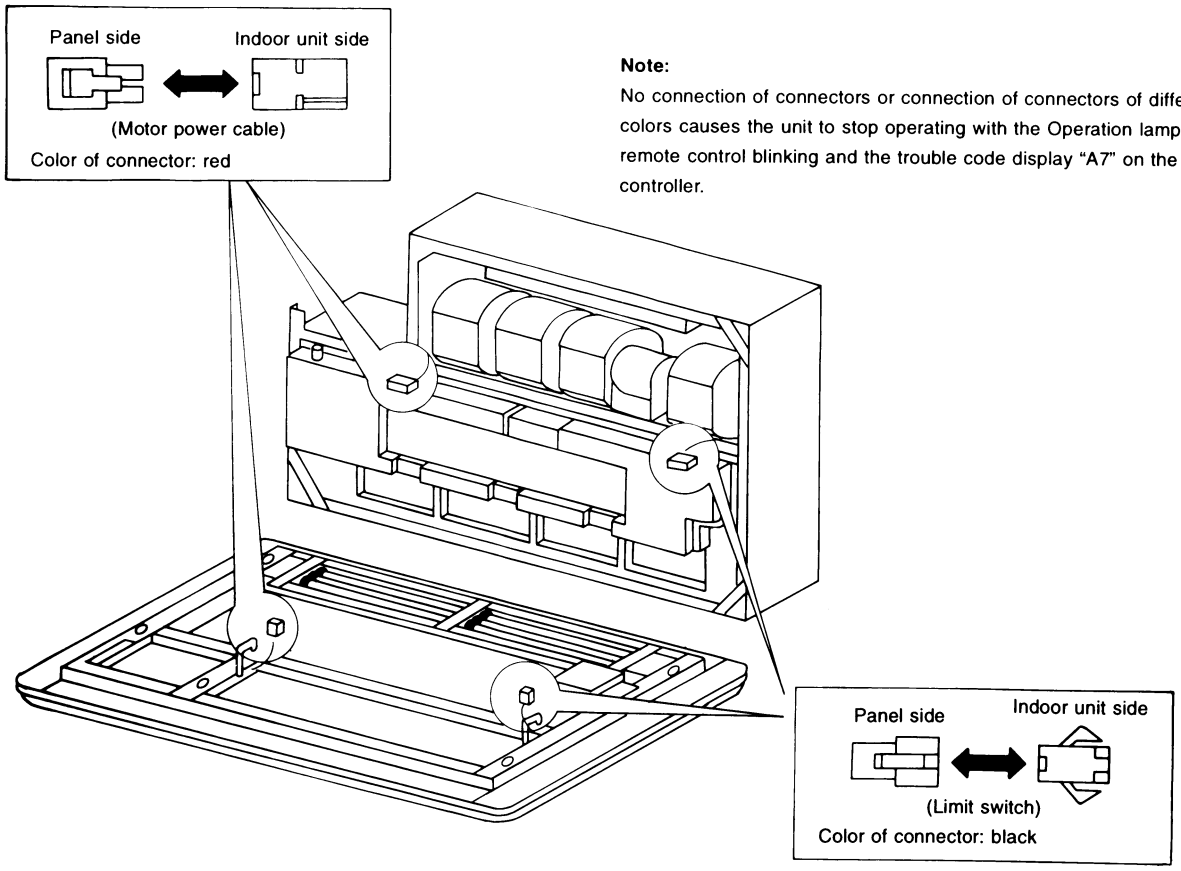

Note:
No connection of connectors or connection of connectors of different colors causes the unit to stop operating with the Operation lamp on the remote control blinking and the trouble code display "A7" on the remote controller.

3PA59586-3B

3. Fixing the decoration panel

(1) In order to prevent air leakage, a sealing material is provided at the spot where the indoor unit body is joined with the decoration panel. Fix the decoration panel in the following method. (Shoulder bolts are used as the fixing screws. Tighten the bolts until their shoulders.)

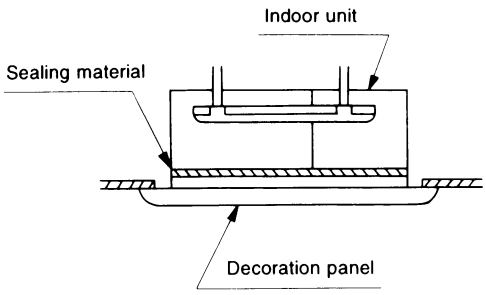

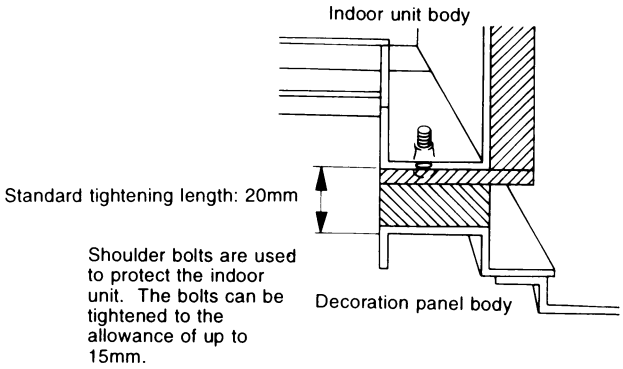

(2) When tightening the bolts, be sure to make no gap between the panel and the ceiling and set the panel in parallel to the ceiling and the ceiling joint.

〈 Improper installation of the panel to the cassette body causes air leakage. 〉

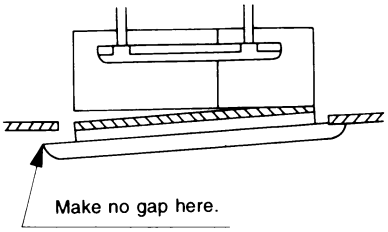

Note:
In case there remains a gap between the panel and the ceiling when the fixing bolts have been tightened fully to their shoulders, adjust the height of the indoor unit.

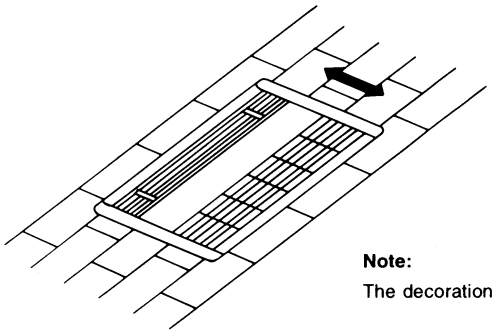

Note:
The decoration panel can be adjusted back and forth to 10 mm, respectively.

(3) Finally, make sure that the decoration panel is securely fixed to the indoor unit.

〈 Improper installation (tightening) causes the troubles as shown below; be sure to double-check the completion of the installation work. 〉

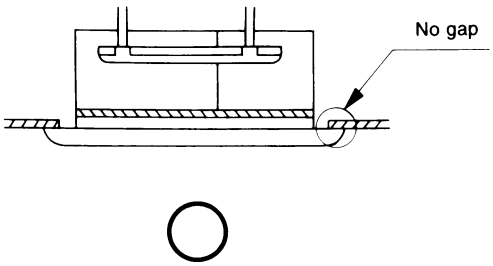

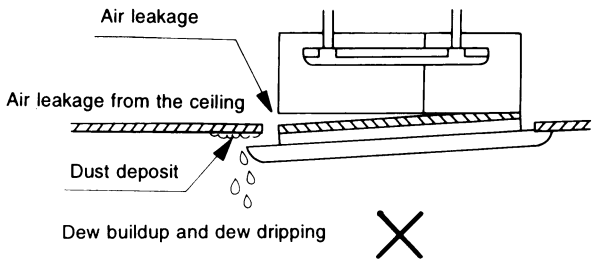

C: 3PA59586-3B

6.2 KPBJ52F56 / 80W — Panel Spacer

If the space above the ceiling is not available for more than 220mm, use the panel spacer, which enables to install the unit in 200mm space.

KPBJ52F56W

This photo is a part of the product.

Dimensions Unit (mm)

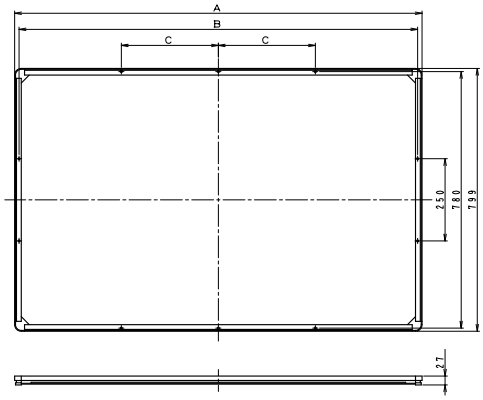

Model	A	B	C
KPBJ52F56W	1239	1212	295
KPBJ52F80W	1439	1412	345

C: D3K1412A

Item / Model		KPBJ52F56W	KPBJ52F80W
Color		White	
Material		Aluminum extrusion (resin used on corner part only)	
Component		Panel spacer. insulation. screws. installation manual.	
Mass	kg	1.6	1.8
Applicable decoration panel		BYK45FJW1	BYK71FJW1

Example of usage

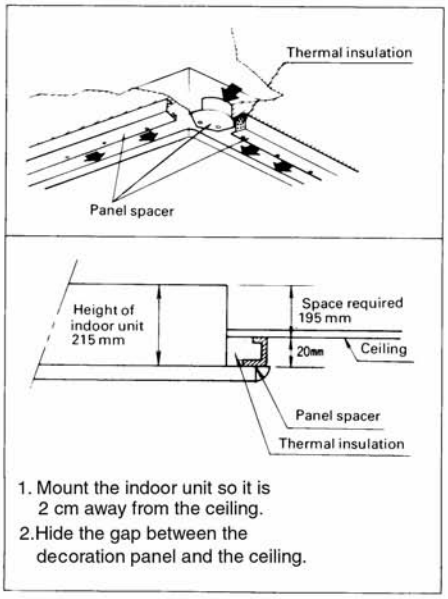

Installation Manual

① Combination with the decoration panel

Be sure to check the model number in the table below before installation.

Space required in the ceiling	Kit name	Color	Applied decoration panel
20 cm	KPBJ52F56W	White	BYK45FJW1
	KPBJ52F80W	White	BYK71FJW1

② Contents of kit

Prior to installation check whether you have the complete kit of parts as shown below including the installation manual.

Name	Panel spacer (1)	Panel spacer (2)	Panel spacer (3)	Thermal insulation (1)
Quantity	2 pieces	2 pieces	4 pieces	2 pieces
Shape				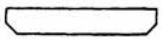

Name	Thermal insulation (2)	Screws	Installation manual
Quantity	2 pieces	18 pieces	1 piece
Shape	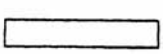	M4×12	

JC: 3K07220A

③ Preparation of the decoration panel

● Handle the decoration panel with care.
Never lean against the wall or leave it on a projecting object to prevent the damage on the surface of the panel. Never hold the air discharge outlet when installing to prevent the air discharge outlet from damage.

(1) Place the decoration panel face down on the corrugated cardboard or the vinyl sheet to prevent the damage on the surface.

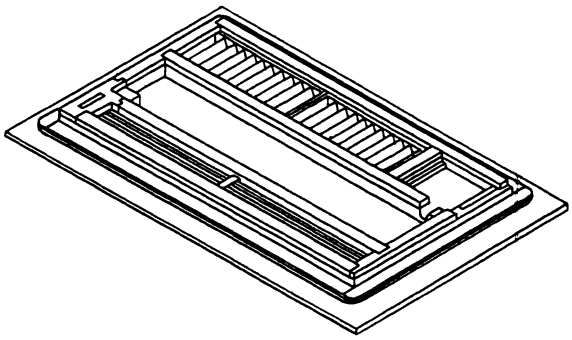

(2) Remove the thermal insulation. (2 locations)

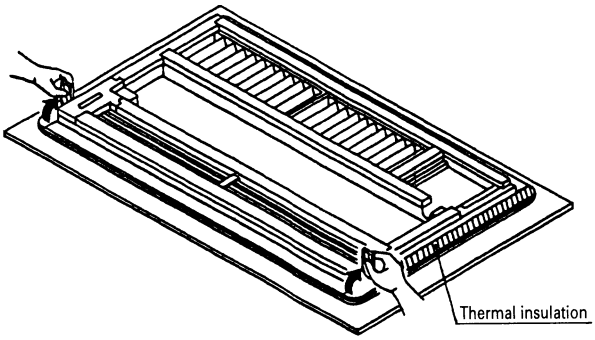

(3) Remove the glue on the thermal insulation where the panel spacer is installed. Remove also the stick-out glue on the panel frame by cutting knife etc.

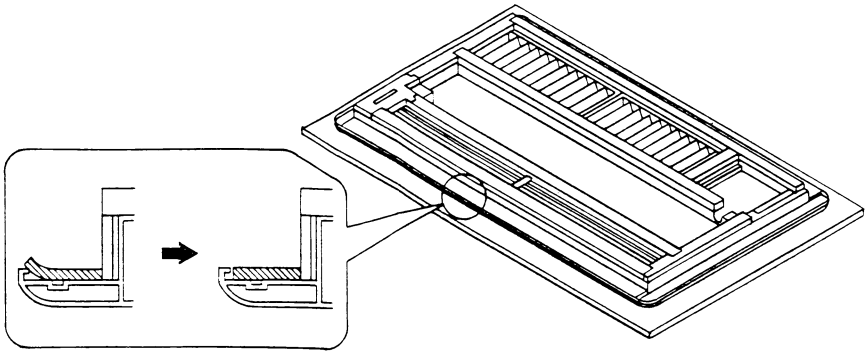

JC: 3K07220A

④ Installation of the panel spacer

(1) Assemble the panel spacer (1) , (2) and (3) temporarily.

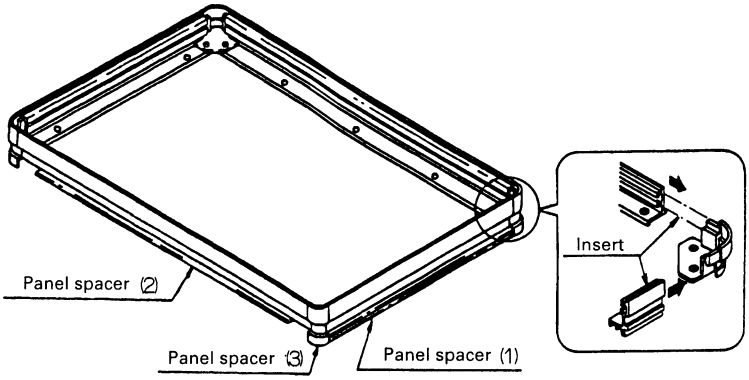

(2) Set the temporarily assembled panel spacer to the decoration panel.

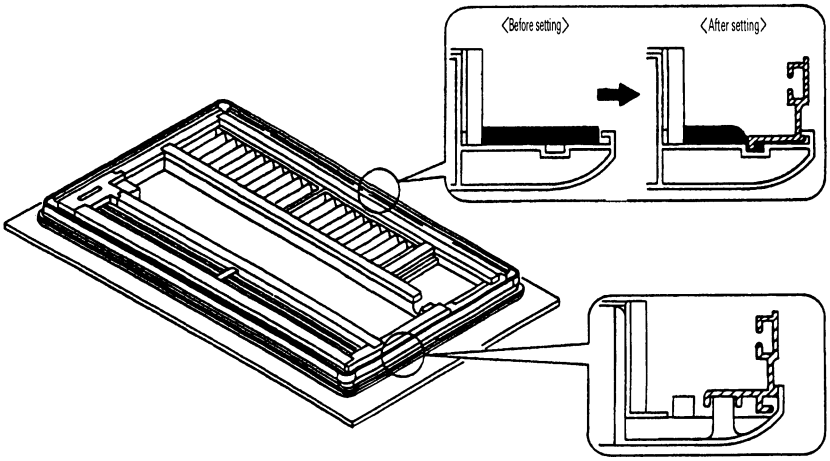

(3) Fix the panel spacer to the decoration panel with screws (18 pieces).

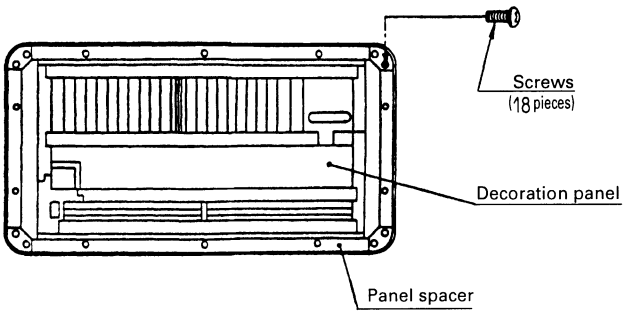

JC: 3K07220A

(4) Attach the thermal insulation (1) and (2).

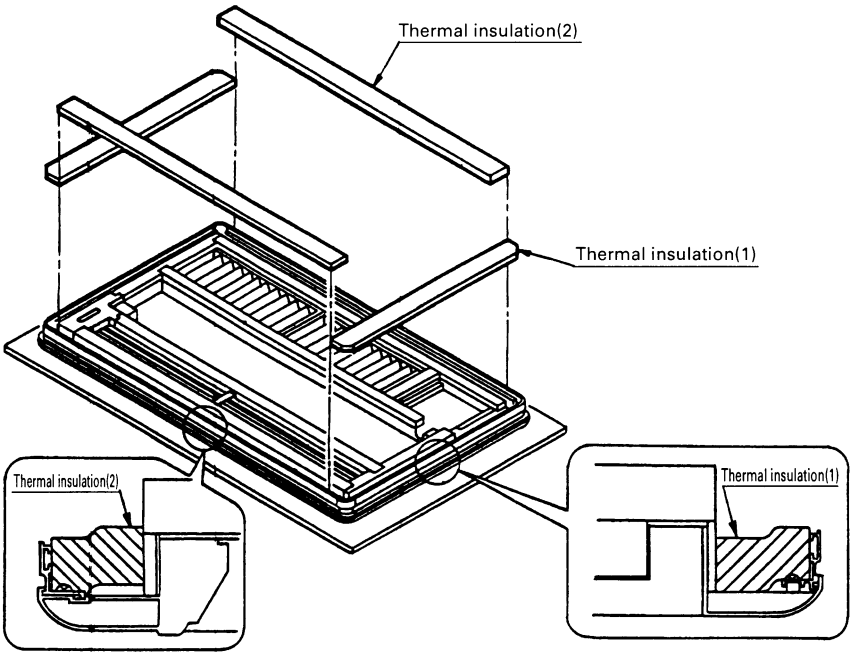

⑤ Selection of the location for installation

It is required the space of 20cm above the ceiling for the installation.
Refer to the item of "Selecting installation site" of the installation manual of the indoor unit for other details.

JC: 3K07220A

⑥ Installation of the indoor unit

When you install the panel spacer, lower the indoor unit by 20cm from the standard height.

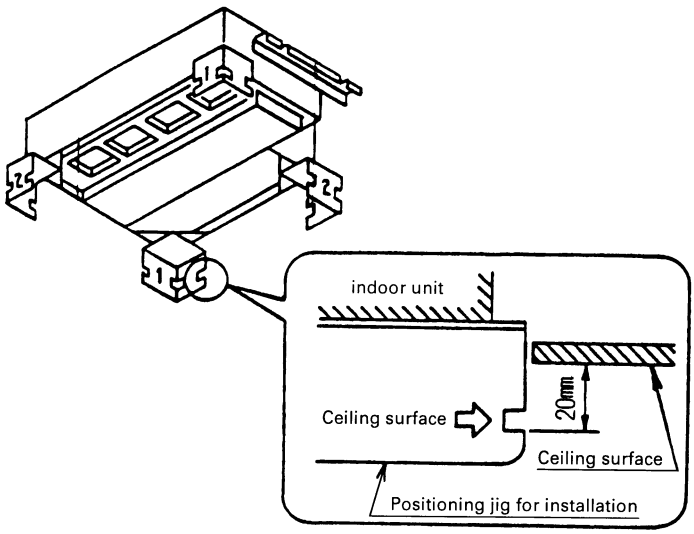

Refer to the item of "Indoor unit installation" of the installation manual of the indoor unit for other details.

⑦ Attachment of the decoration panel

After the completion of installation of the panel spacer, attach the decoration panel to the indoor unit.

JC: 3K07220A

6.3 KAFJ521F56 / 80 — Replacement Long-life Filter

KAFJ521F80

Dimensions Unit (mm)

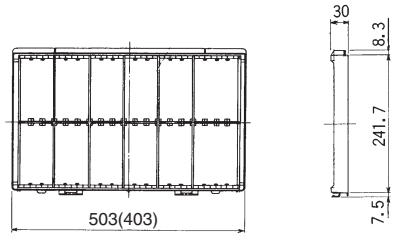

Dimensions listed in parentheses show KAFJ521F56.

C: D3K1145A

・Can be water-washed. Can be reused.

Item \ Model		KAFJ521F56	KAFJ521F80
Average efficiency	%	45 (Gravity method)	
Initial pressure loss	Pa	10 or less	
Final pressure loss	Pa	49	
Life	h	2,500 (dust concentration 0.15 mg/m^3)	
Airflow rate	m^3/min	6	8.5
	l/sec	100	142
Filter element		Mildew-proof resin net	
Number of sheets included		2	
Mass	kg	0.4	0.6

6.4 KDBJ52F56 / 80W — Air Discharge Blind Panel

This optional kit is to blind the bottom discharge outlet, when the unit is used with front air discharge.

KDBJ52F56W

Example of usage

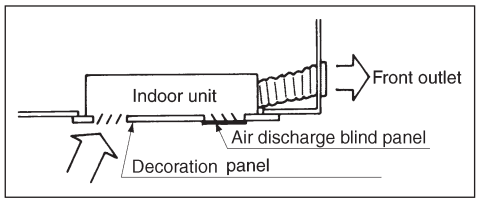

Dimensions Unit (mm)

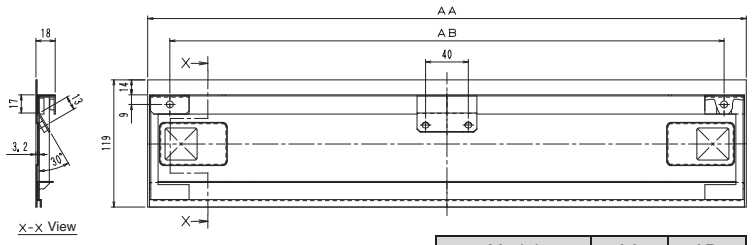

Model	AA	AB
KDBJ52F56W	1125.5	1084
KDBJ52F80W	1325.5	1284

C: D3K1162A

Item \ Model		KDBJ52F56W	KDBJ52F80W
Color		White	
Material		Steel plate	
Mass	kg	1.8	2.2
Component parts		Blind panel assembly. Name plate. Supporting bracket. Screws. Installation manual. Set of caution stickers.	

Additional required accessories
- Discharge grille
- Flexible duct with shutter
- This optional kit is to blind the bottom discharge outlet, when the unit is used with front air discharge.

Installation Manual

① Combination with decoration panel

This kit is used to cover the air discharge outlet of the decoration panel when the unit is installed with the front air discharge.

Name	Color	Applicable decoration
KDBJ52F56W	White	BYK45FJW1
KDBJ52F80W	White	BYK71FJW1

② Contents of kit

Prior to installation check whether you have the complete kit of parts as shown below including the installation manual.

Name	Blind panel assembly	Supporting bracket	Name plate (1)	Name plate (2)
Quantity	1 piece	1 piece	1 piece	1 piece
Shape				

Name	Screws(M5×8)	Screws(M5×40)	Installation manual	Set of caution stickers
Quantity	2 pieces	2 pieces	1 piece	1 piece
Shape	M5×8	M5×40		

1P016132

③ Examination of the decoration panel before removing

(1) Check the angle of the flaps of discharge grille.

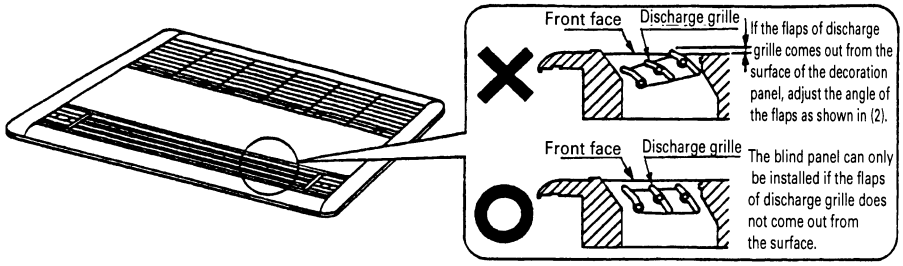

(2) If it is required to adjust the angle of the flaps, supply the electrical power(220V-240V single phase) to the air swing motor connector and adjust the position of the flaps.

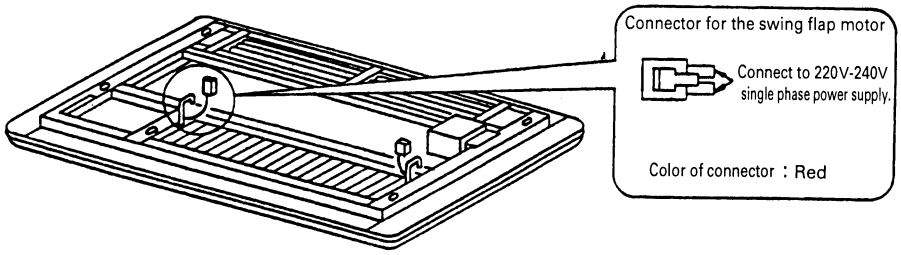

④ Removing the parts

(1) Remove the air outlet decorative covers.

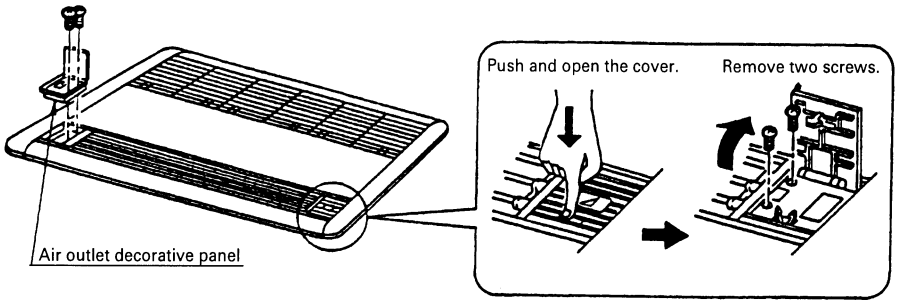

(2) Remove the decorative frame of the air discharge grille.

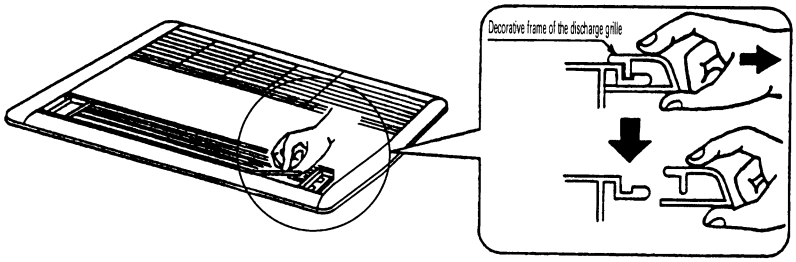

1P016132

⑤ Installation of the air discharge blind panel

(1) Attach the air discharge blind panel and put the vinyl tape to hold panel temporarily.

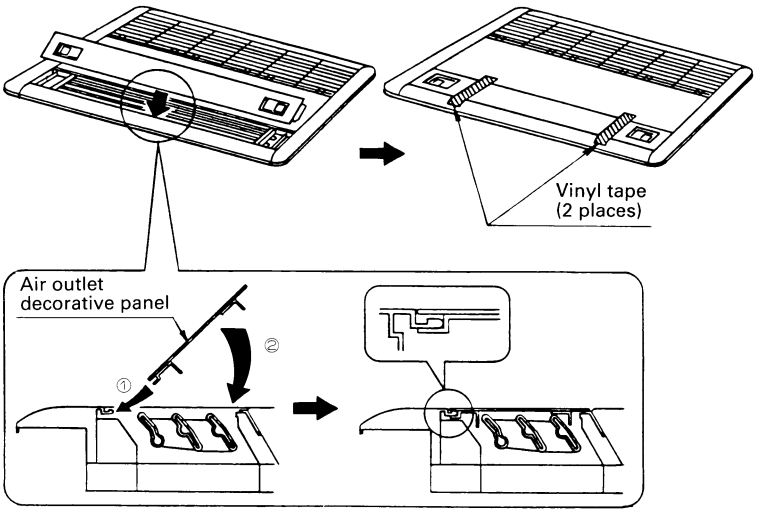

(2) Place the decorative panel face down on the corrugated cardboard or vinyl sheet to protect the surface of the decoration panel.

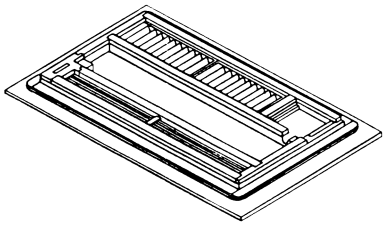

(3) Set the air discharge blind panel with the supporting bracket and fasten the screws.

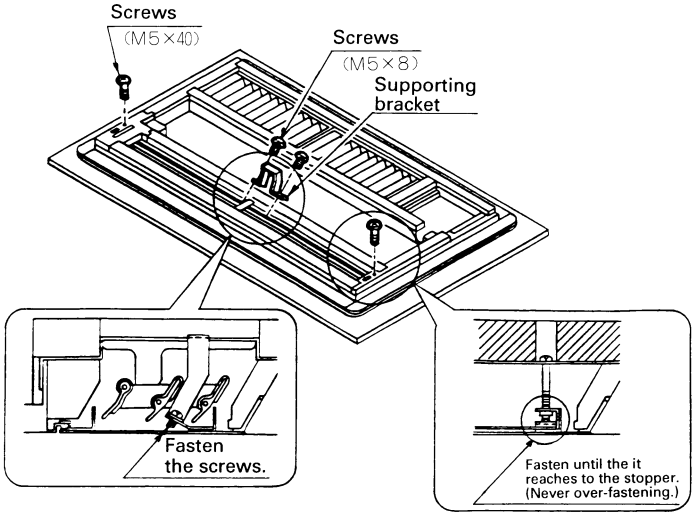

1P016132

⑥ Preparation of the decoration panel

(1) Remove the suction grille from the decoration panel.

(1)-1 Slide the lever of the suction grille and lift it up to one side.

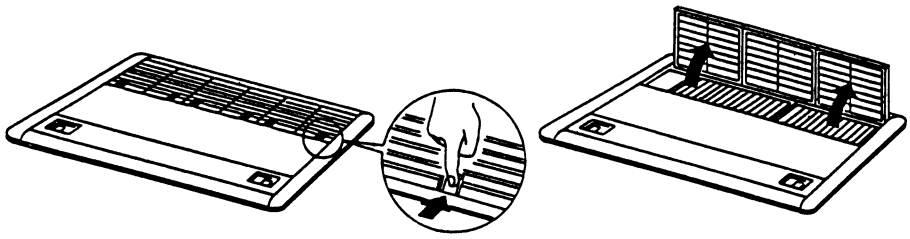

(1)-2 Unhook the suction grille off from the decoration panel.

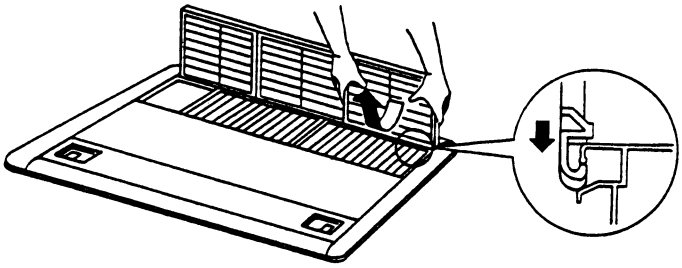

(1)-3 Remove the air filter.

Pull up the air filter knob and remove the air filter.

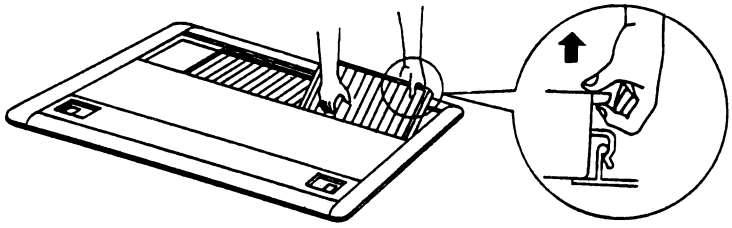

C: 1P016132

⑦ Installing the decoration panel to the indoor unit

Install the decoration panel after the completion of the installation of the front discharge panel.

① Installation of the decoration panel

Refer to the installation manual of the indoor unit for its installation.

(1) Hook the decoration panel to the indoor unit temporarily.

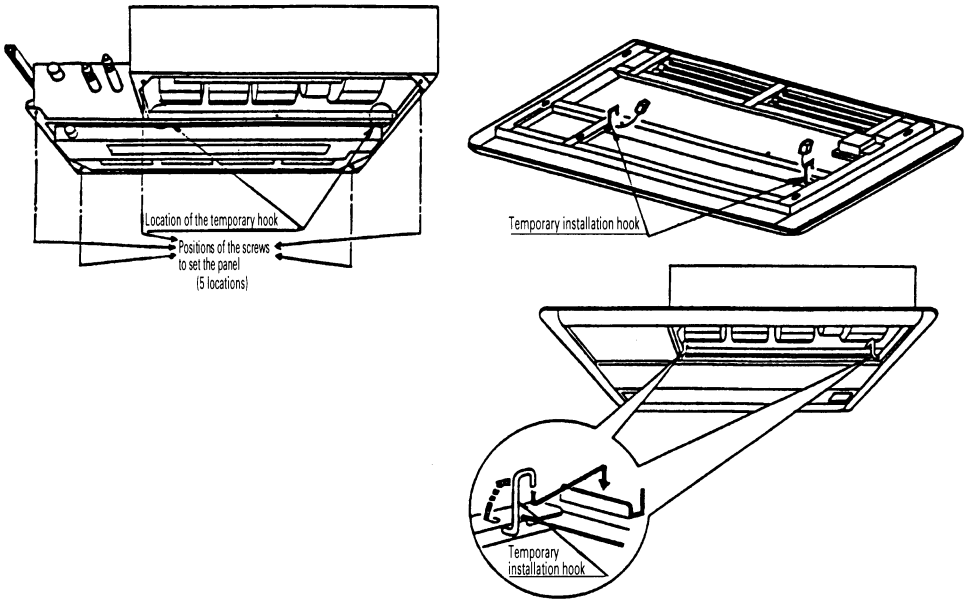

(2) Fasten the panel fixing screws temporarily.

(2)-1 Set the washer to the screws and fasten temporarily.

(2)-2 Adjust the panel as shown below to fit with the opening of the ceiling properly.

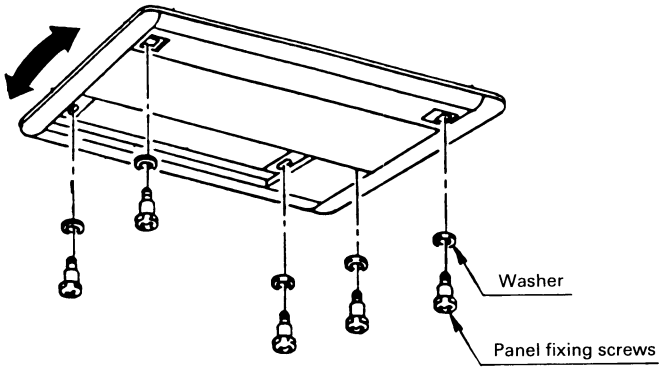

C: 1P016133

② Electrical wiring between indoor unit and the decoration panel

Never connect the connector of the swing motor and the limit switch.

③ Fixing of the decoration panel

(1) The sealing material is attached between indoor unit and the panel to seal the air leakage from the connecting part. Fasten the screws tightly according to the following drawing. (The shoulder bolts are used as fixing screw. Tighten the bolts until their shoulders.)

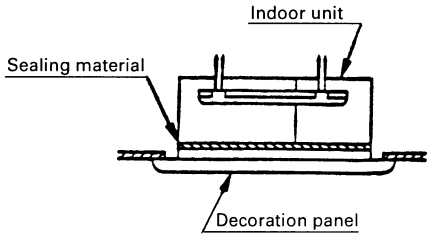

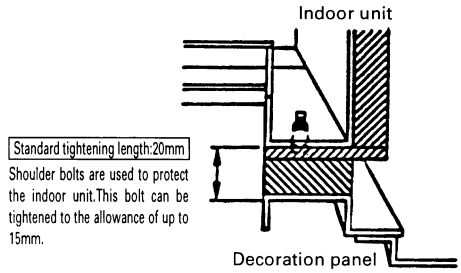

(2) When tightening the bolts, be sure to make no gap between the panel and the ceiling, and set the panel in parallel to the ceiling and the ceiling joint.

Improper installation of the panel to the indoor unit causes air leakage.

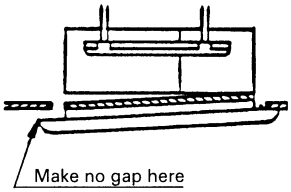

Caution

If there will be a gap between the panel and the indoor unit after tightening the bolts up to the shoulder, adjust the height of the indoor unit.

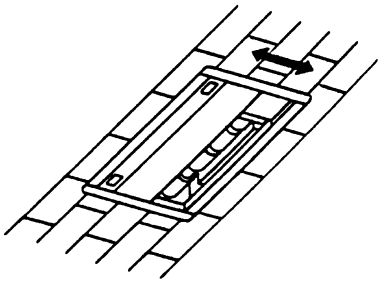

Caution

The decoration panel can be adjusted back and forth to 10mm respectively.

(3) Make sure whether the decoration panel is securely fixed to the indoor unit.

Improper installation (loose tightening) causes the trouble as shown below. Be sure whether the installation is completed properly again.

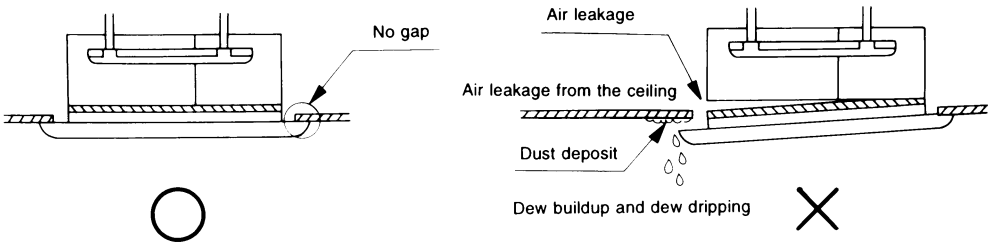

C: 1P016133

⑧ Attaching the set of name plate

(1) Attach the name plates as follows.

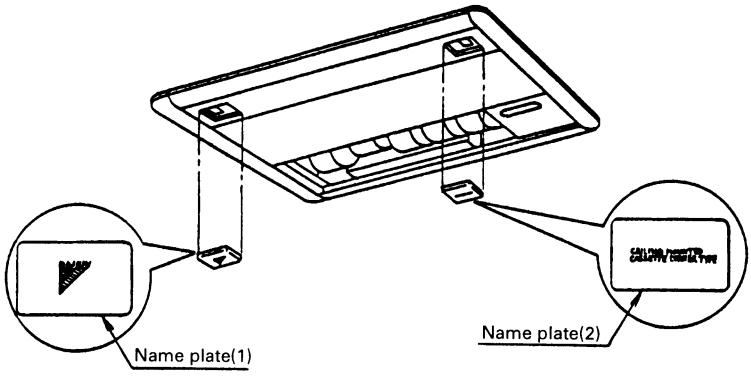

(2) Attach the set of caution stickers.

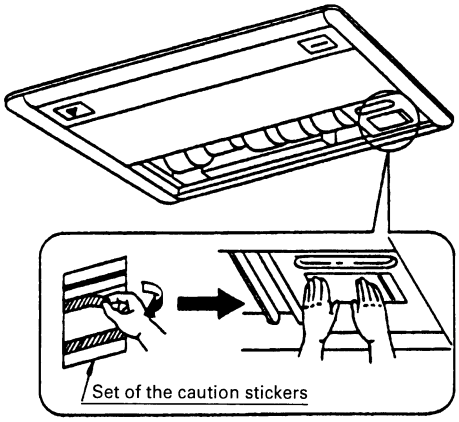

⑨ Installation of the suction grille and air filter

Refer to the item ⑥ "Preparation of decoration panel" of this manual, and install it in the reverse step.

C: 1P016133

6.5 K-HV7 / 9AW — Discharge Grille

This optional kit is used when the unit is installed with front air discharge. The direction of air can be adjusted flexibly.
This discharge grille should be installed with the following flexible duct.

K-HV7AW

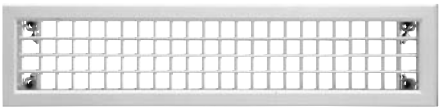

Dimensions Unit (mm)

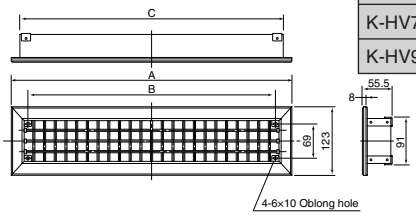

Model	Dimensions (mm)			Mass (kg)
	A	B	C	
K-HV7AW	523	466	488	1.3
K-HV9AW	723	666	688	1.7

■ Specification
● Movable vane
● Material : Steel plate construction, surrounding cedar flame (nylon flocking)

C: D3K1972C

Item / Model		K-HV7AW	K-HV9AW
Material		Steel plate construction. Surrounding cedar flame (nylon flocking).	
Accessories		Wing adjustors. Attachment clamp.	
Available volume flow rate		5.0~12.0	7.0~17.0
Mass	kg	1.3	1.7

6.6 KFDJ52FA56 / 80 — Flexible Duct with Shutter

KFDJ52FA56

- Internal shutter
  → Using the shutter allows adjustment of fan strength for front and bottom directions.
- Location of attachment can be varied within 20 mm up or down. Connection to indoor unit also easy to do.

Installation

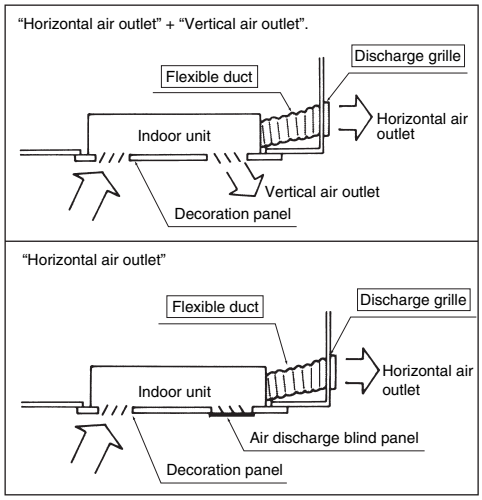

Dimensions Unit (mm)

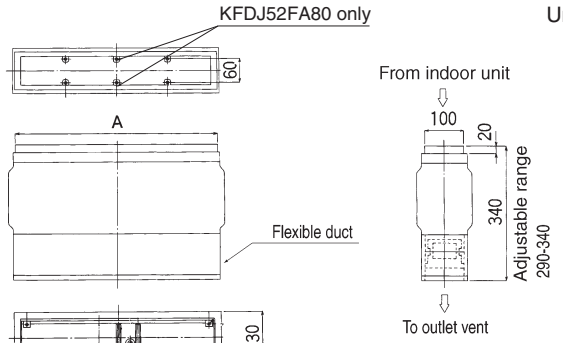

Model	A	B	C
KFDJ52FA56	520	498	530
KFDJ52FA80	720	698	730

C: D3K04935

Item \ Model		KFDJ52FA56	KFDJ52FA80
Thermal insulation		Material: glass wool (t=25 mm, specific gravity=24 kg/m³)	
Mass	kg	4.5	5.0
Component parts		Flexible duct. Shutter. Setting plate for duct. Sealing pad. Shutter adjuster. Screws. Thermal insulation. Installation manual.	

❶ Combination with discharge grille

The "Discharge grille" is also required, when you install the flexible duct.
When you install the unit with "Horizontal air outlet", the air discharge blind panel of optional kit can be installed on the decoration panel, if necessary.

Flexible duct	Discharge grille	Color
KFDJ52FA56	K-HV7AW	White
KFDJ52FA80	K-HV9AW	White

Note:Be sure to use the original optional discharge grille. If you use the discharge grille in the market, you may have a problem with the distribution of the room temperature or the condensation on the grille.

❷ Contents of kit

Prior to installation check whether you have the complete kit of parts as shown below including the installation manual.

Name		Flexible duct	Shutter	Thermal insulation (1)	Thermal insulation (2)	Setting plate for duct	Flap adjuster
Shape				25	17		
Quantity	KFDJ52FA56	1 piece	1 piece	1 piece	1 piece	4 pieces	1 piece
	KFDJ52FA80	1 piece	1 piece	1 piece	1 piece	6 pieces	1 piece

Name		Sealing pad				Installation manual	Screws		
Shape		Ⓐ 45	Ⓑ 71	Ⓒ	Ⓓ		Ⓐ M4×12	Ⓑ M5×15	Ⓒ M5×20
Quantity	KFDJ52FA56	2 pieces	1 piece	1 piece	1 piece	1 piece	4 pieces	4 pieces	4 pieces
	KFDJ52FA80	-	4 pieces		2 pieces	1 piece	6 pieces	6 pieces	4 pieces

❸ Preparation of indoor unit

(1) Cut off the thermal insulation on the front fase of the indoor unit along with the slit furnished.

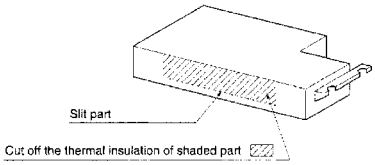

(2) Remove the front plate by unfastening all the screw.

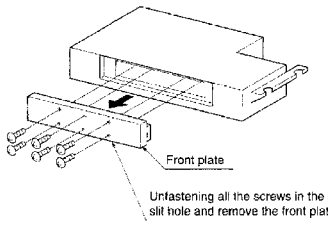

Model	Screw
FHYK35/45FJV1 FXKQ25/32/40MAVE FXK25/32/40LVE	4 pieces
FHK60FV1, FHYK60/71FJV1 FXKQ63MAVE FXK63LVE	6 pieces

C: 1P167773

❹ Attaching the sealing pad to the air dischange outlet

Cover the air discharge outlets with the sealing pads as needed by the installation site as shown in the table below.
Peel off the paper mating from the backside of one of the sealing pad and attach the pad to the drain pan opening.

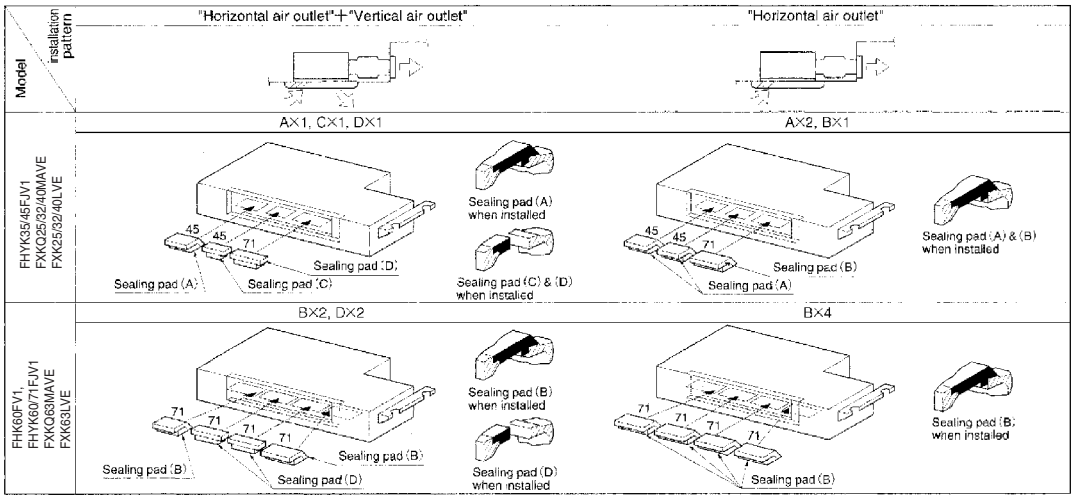

❺ Preparation prior to the installation

(1) Dimension and location of the opening of ceiling and drop ceiling, and also the suspension bolts. (Unit [mm])

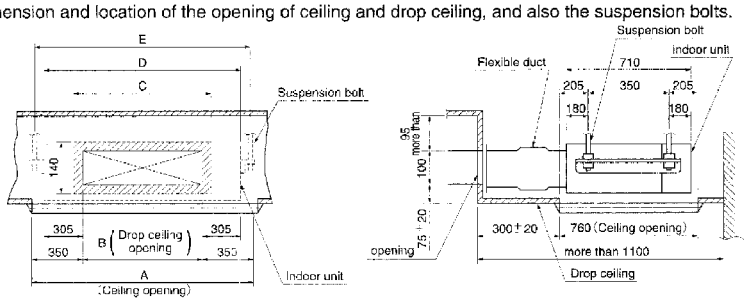

Flexible duct	A	B	C	D	E
KFDJ52FA56	1200	500	540	1110	1150
KFDJ52FA80	1400	700	740	1310	1350

(2) Make a opening in the ceilling for installation (If it is a existing ceiling.)
- Use the paper pattern (included the indoor unit) for installation, which has been made to the dimension of the opening in the ceiling.
- Make a opening in the ceiling, and run the refrigerant piping, drain piping, wire for remote controller and transmission wiring between indoor unit and outdoor unit up to the inlet port for the piping and wiring of the indoor unit. (Refer to the related items of the installation manual of the indoor unit for its installation of the piping and wiring.)
- After making a opening in the ceiling, reinforcement of the ceiling frame and etc.may be required to maintain the level of the ceiling or to prevent the vibration of the ceiling. For details, consult with building contractor or interior contractor.

(3) Make a opening in the drop ceiling for the installation of discharge grille. (If it is a existing ceiling.)
- Never install the ceiling joint in the shaped part ▨, which disturb the installation of the flexible duct. (Install only a ceiling material.)

(4) Install the suspension bolts. (Use M8 size of the suspension bolts.)
- Use the hole-in anchors for the existing building and use the embedded inserts, embedded anchors for newly built ceiling so that weight of the unit is supported. Also adjust the length of the bolts to the ceiling before installing the unit.

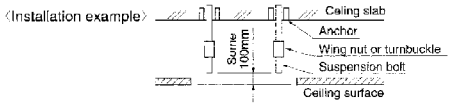

Note :All the parts shown above should be arranged locally.

C: 1P167773

❻ Installation of indoor unit

(1) Prepare for the installation of the flexible duct.

①Attach the setting plate for duct to the indoor unit with screws (A) (M4×12)

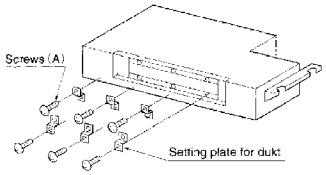

②Attach the thermal insulation (1) and (2) along the edge of opening.

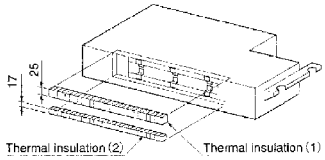

(2) Remove the shutter from the flexible duct.

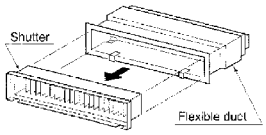

(3) Install the indoor unit and the flexible duct.

In case of the existing ceiling

①Install the flexible duct temporarily in the ceiling.

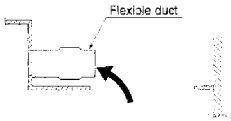

②Refer to the installation manual of the indoor unit and install the indoor unit.

③Install the flexible duct to the setting plate for duct with screws (B) (M5×15), facing the hook of flexible duct to down side.

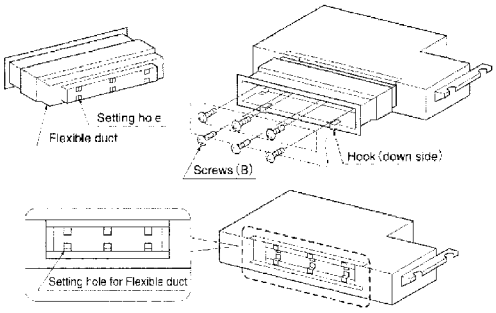

In case of the new ceiling

①Install the flexible duct to the indoor unit with screws (B) (M5×15), facing the hook of flexible duct to down side.

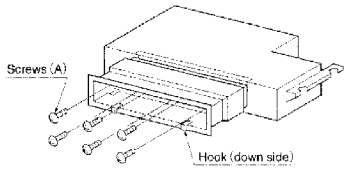

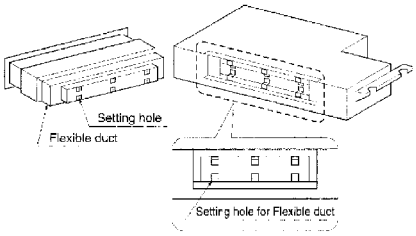

②Refer to the installation manual of the indoor unit and install the indoor unit (complete with flexible duct).

1P167773

7 Initial setting of the indoor unit

Depending on the pattern of installation, connect the terminal board (A2P) of the indoor unit as follows.
However, in case of SKY AIR series, set by the remote controller at the field set mode. For details, refer to the "How to set in the field" of the operation manual of the remote controller.

Model \ Installation pattern	"Horizontal air outlet"+"Vertical air outlet"	"Horizontal air outlet"
Less than 3m	SKY AIR series Setting number of field setting MODE No.: Group setting No. 13; Individual setting No. 23; FIRST CODE No. 6; SECOND CODE No. 01 (Less than 3m), 02 (3m-3.8m) VRV unit Terminal board (A2P) Printed circuit board assembly YC YA HIGH NORMAL LL MIF [factory set]	SKY AIR series No field setting required by the remote controller. VRV unit No setting required. YC YA HIGH NORMAL LL MIF [factory set]
3m-3.8m		Not possible

8 Installation of the shutter and its adjustment

(1) Install the shutter in the inside of the flexible duct with screws (C) (M5×20).

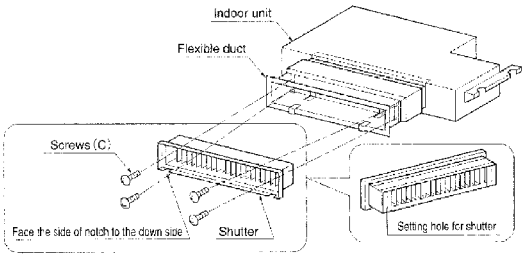

(2) When the unit is installed with the pattern of the "Horizontal air outlet"+"Vertical air outlet", by referring to the following table, adjust the opening of shutter with the tool according to the height of the ceiling as directed in the name plate for the opening of shutter.

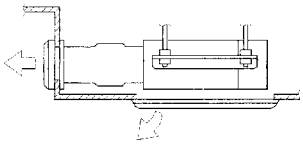

Opening of shutter	Proportion of the air volume "Horizontal air outlet"	Proportion of the air volume Vertical air outlet	Ceiling height
Full close	Never operate the unit with the shutter at "full close"		
25%	4	6	3m-3.8m
50%	5	5	Less than 3m
75%	5.5	4.5	
Full open	6	4	

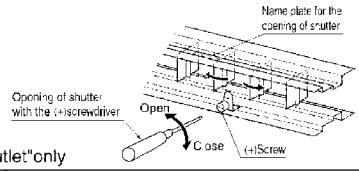

Caution: Be sure to set the shutter at "full open" when the unit is operated with "Horizontal air outlet" only

1P167774

3

⑨ Installation of the discharge grille

(1) Before installing the discharge grille, set the hook for duct to the lower side of the opening.
(2) Install the discharge grille to the flexible duct with screws (M5×50) (included in the discharge grille kit) over the drop ceiling board

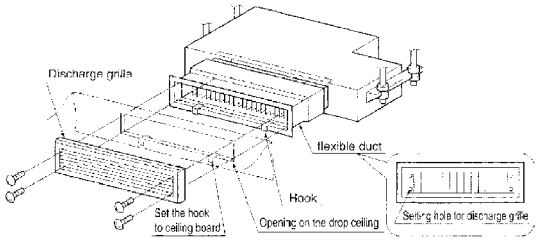

⑩ Installation of the decoration panel to the indoor unit

●Install the decoration panel according to the pattern of the installation.

"Horizontal air outlet" and "Vertical air outlet"	"Horizontal air outlet"	
	When the air discharge blind panel is not installed.	When the air discharge blind panel is installed.
Refer to the installation manual of the decoration panel, install the decoration panel to the indoor unit.		Refer to the installation manual of the air discharge blind plate, install the decoration panel to the indoor unit.

1P167774

11 Adjusting the direction of air discharge

How to adjust the blow direction depending on the unit set-up.

In case of"Horizontal air outlet"...When the air discharge unit is used.

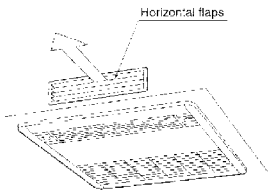

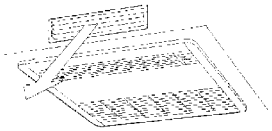

•Up/Down adjustment when cooling

Keep the horizontal flaps of discharge grille at horizontal position.

Caution

1.When you set the flaps downward, keep all the horizontal flaps same direction as shown below. Never set the flaps with sharp bend to disturb the air flow, which may cause the condensation on the discharge grille.

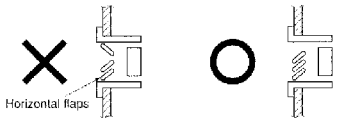

2.Keep the horizontal flap to a 40° angle or less. If the flaps are set to a 40° angle or more, it may cause the condensation on the grille.

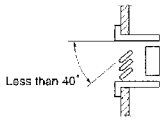

•Up/Down adjustment when heating

Set the horizontal flaps of the discharge grille downward.

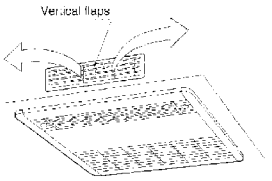

•Right/Left adjustment

Adjust the vertical flaps of the discharge grille to the right and left by the flap adjuster (included in the kit) in order to have a appropriate distribution of the room temperature.

Caution

When you adjust the vertical flaps to the right and left side, adjust the flaps as shown below. If you set the flaps with a sharp bend and it disturbs the air flow, it may cause the condensation of the discharge grille.

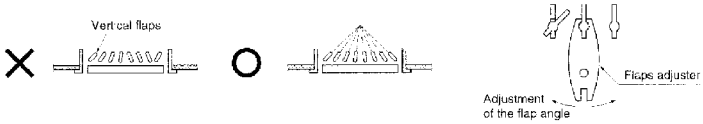

In case of "Horizontal air outlet" ...When the air discharge unit is used.

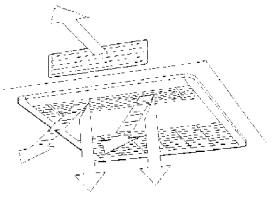

•Up/Down adjustment for cooling operation

For "Horizontal air outlet" refer to the above and adjust the flaps Up/Down of the front discharge grille.
For "Vertical air outlet" refer to the operation manual of the indoor unit for "Adjustment of air direction by remote control".

Caution

When the unit is operated for a long period of time in high humid place, it may cause the condensation on the panel. In this case , set the flaps of the discharge grille downward or swing the flaps.

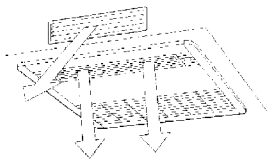

•Up/Down adjustment for heating operation

For "Horizontal air outlet" refer to the above and adjust the flaps Up/Down of the front discharge grille.
For "Vertical air outlet" refer to the operation manual of the indoor unit for "Adjustment of the direction of the air flow by remote controller".

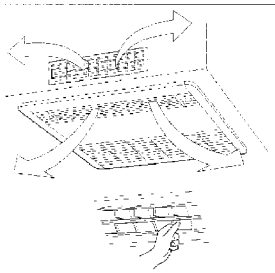

•Right/Left adjustment for heating operation

For "Horizontal air outlet" refer to the above and adjust the flaps Right/Left of the front discharge grille.
For "Vertical air outlet" adjust the vertical flaps of the discharge grille to Right/Left to obtain a appropriate distribution of the room temperature.

1P167774

Air Discharge Blind Panel (KDBJ52F56W) + Discharge Grille (KDGJ52F56W) + Flexible Duct (KFDJ52FA56) + Ceiling Mounted Cassette Corner Type (for FHYK35/45FJV1, FXKQ25/32/40MAVE, FXK25/32/40LVE)

Unit (mm)

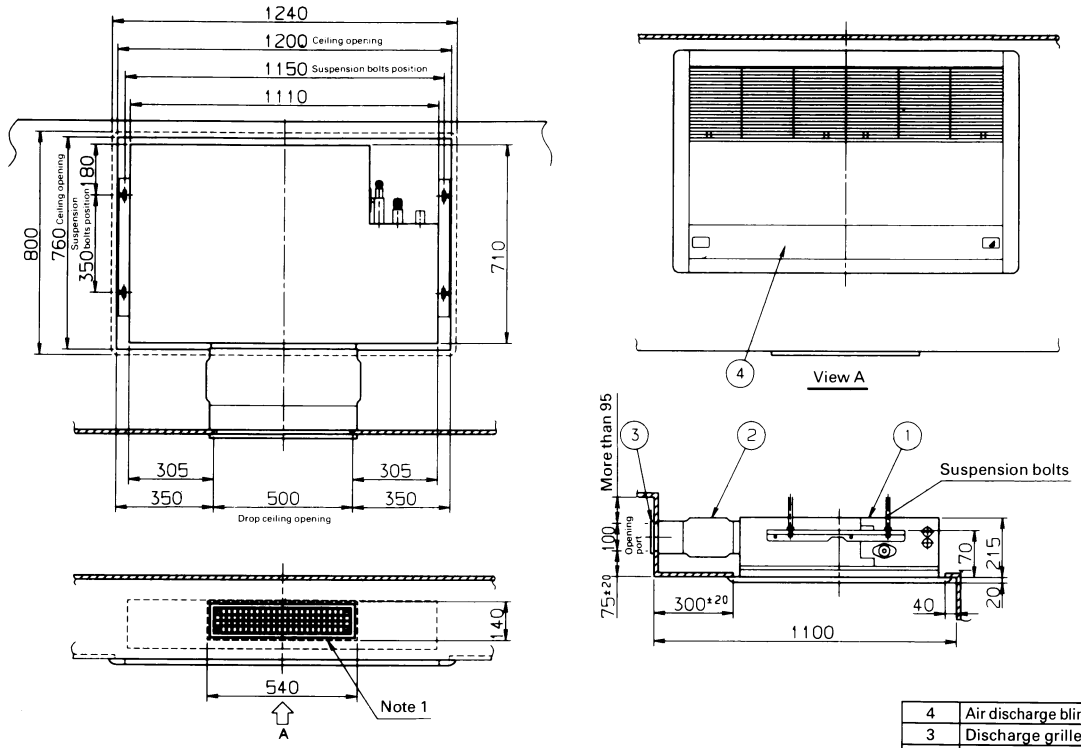

Note: 1. Do not obstruct around the drop ceiling opening.

Number	Name	Description
4	Air discharge blind panel	
3	Discharge grille	
2	Flexible duct	
1	Indoor unit	

Air Discharge Blind Panel (KDBJ52F80W) + Air Discharge Grille (KDGJ52F80W) + Flexible Duct (KFDJ52FA80) + Ceiling Mounted Cassette Corner Type (for FHK60FV1, FHYK60/71FJV1, FXKQ63MAVE, FXK63LVE)

Unit (mm)

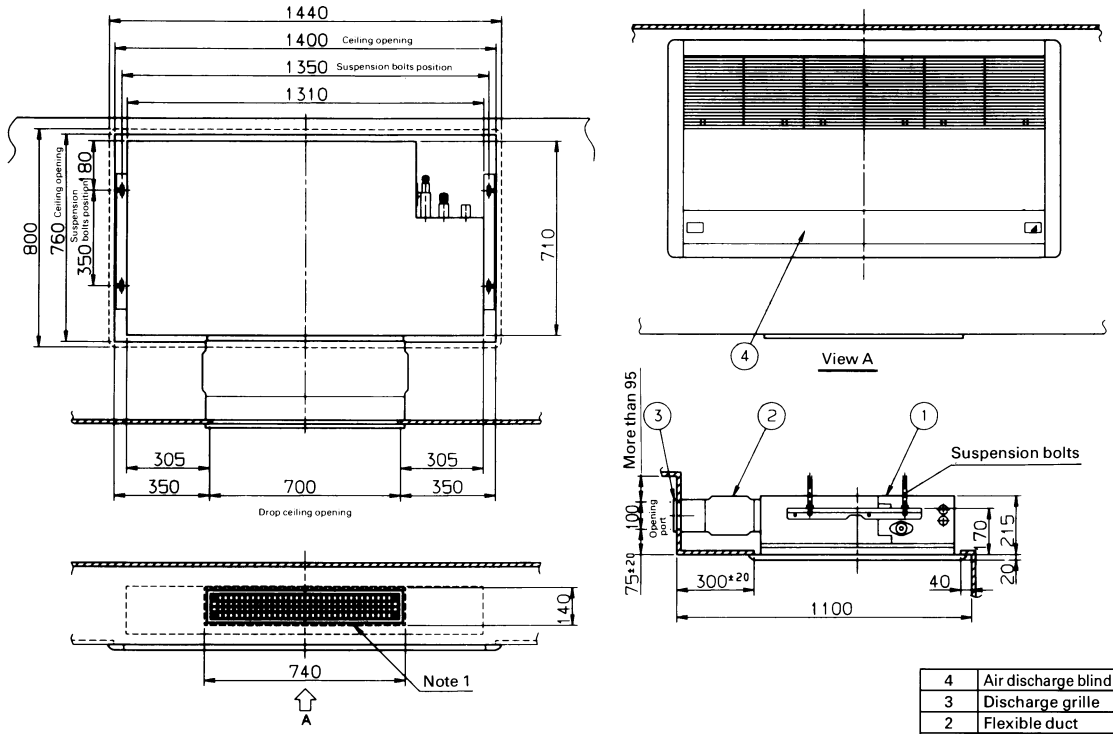

Note: 1. Do not obstruct around the drop ceiling opening.

Number	Name	Description
4	Air discharge blind panel	
3	Discharge grille	
2	Flexible duct	
1	Indoor unit	

7. FXD(Q) — Slim Ceiling Mounted Duct Type

7.1 KDT25N32 / 50 / 63 — Insulation Kit for High Humidity

Installation Manual

Caution

- This kit can be installed to the Ceiling mounted Built-in Type Air Conditioners.<Slim duct type>
- When the installation box for adapter PCB(KPP1B101)is used together, mount this kit before installation box.
- It is recommended to mount this kit before installing the indoor unit.

Details of parts

Designation	① Top plate insulation (T-1)	② Top plate insulation (T-2)	③ Side plate insulation (S-1)	④ Side plate insulation (S-2)
Shape	A, Slit, 380, (mm)	A, Slit, 240, (mm)	Score, 380, Slit, 207, (mm)	Score, 240, 207, (mm)
Kit name / A	KDT25N32 700; KDT25N50 900; KDT25N63 1100	KDT25N32 700; KDT25N50 900; KDT25N63 1100		
Number of pieces	1 pc.	1 pc.	2 pcs.	1 pc.

Designation	⑤ Bottom plate insulation (B-1)	⑥ Chamber cover insulation (C-1)
Shape	A, Slit, 420, (mm)	A, Slit, 200, (mm)
Kit name / A	KDT25N32 704; KDT25N50 904; KDT25N63 1104	KDT25N32 621; KDT25N50 821; KDT25N63 1021
Number of pieces	1 pc.	1 pc.

Designation	⑦ Hanger (right) insulation (H-1)	⑧ Hanger (left) insulation (H-2)	⑨ Installation manual
Shape	390, (mm), Slit, 90	390, (mm), 90, Slit	(This instruction)
Number of pieces	1 pc.	1 pc.	1 pc.

1 How to attach ⟨⚠ When moving the unit at or after opening, hold the unit by the hanger brackets. Do not apply force to the refrigernat piping, drain piping or flange parts.⟩

<Procedure> Stick the insulations carefully according to the following procedures and do not make a gap betwween the adjacent thermal insulations.

(1) Stick the top plate insulation (T-1), (T-2) to the indoor unit top plate.
(2) Cut off the side plate insulation (S-1) following the score. (See the right figure)
(3) Stick the side plate insulation (S-1) to the indoor unit right side plate.
(4) Stick the side plate insulation (S-1) to the indoor unit left side plate without cutting off the area surrounded by the score.
(5) Stick the side plate insulation (S-2) to the indoor unit left side plate.
(6) Stick the bottom plate insulation (B-1) to the indoor unit bottom plate.
(7) Stick the chamber cover insulation (C-1) to the indoor unit chamber cover.
(8) Stick the hanger (left) insulation (H-2) and the hanger (right) insulation (H-1) respectively to the left and right hangers respectively. (See the right figure for the sticking reference.)

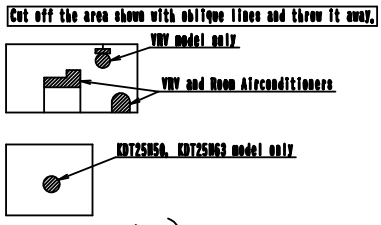

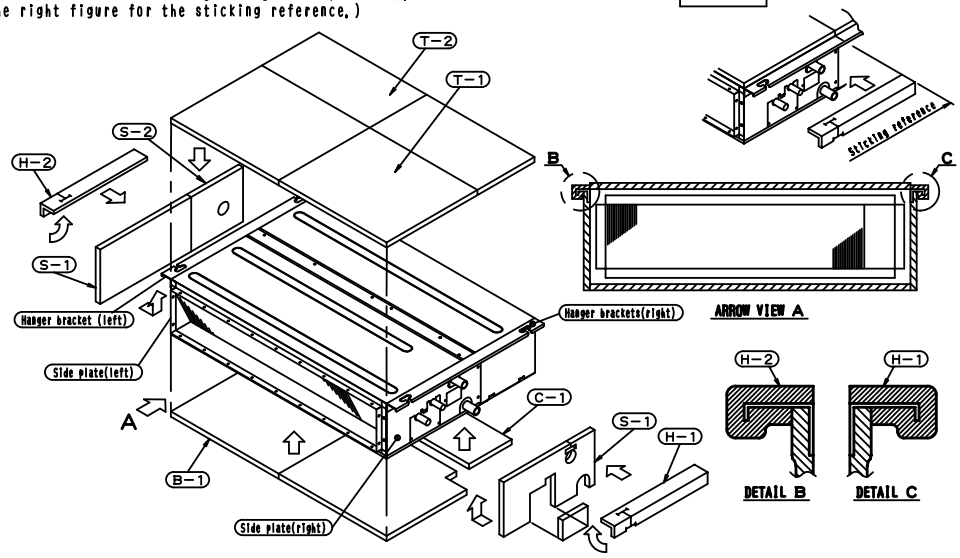

C: 3P131323E

8. FXYD — Ceiling Mounted Low Silhouette Duct Type

8.1 KDGF19A45 / 71 — Decoration Panel

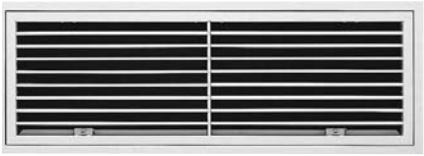

Dimensions Unit (mm)

Model	A	B
KDGF19A45	697	664
KDGF19A71	1097	1064

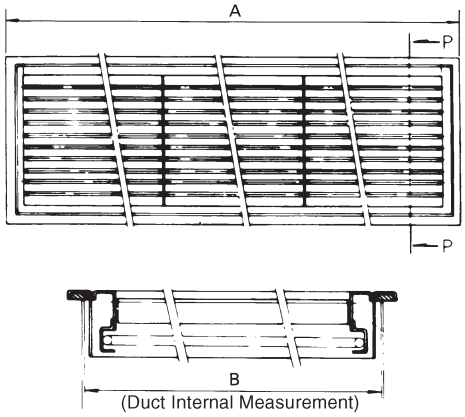

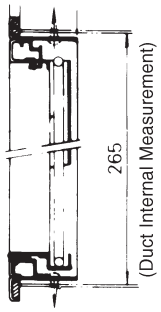

Section P-P

9. FXS(YQ) / FXYB — Ceiling Mounted Built-in Type

9.1 BYBS32 / 45 / 71 / 125DJW1 — Decoration panel

Installation Manual

① Check of the parts

- The box contains this manual and the parts listed below.

Item	Description	Quantity
Decoration panel	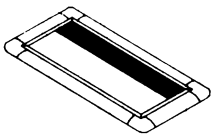	1 set

Item	Description	Quantity
Decoration panel fixing screw	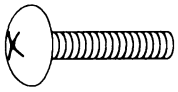 M5 × 40	4 pcs.

② Preparing the decoration panel

- Handle the suction panel with care.

<Never lean the panel against a wall, etc. nor leave it on a projecting object. (For preventions of dents or damages to the panel surface.)>

Remove the inner frame assembly.

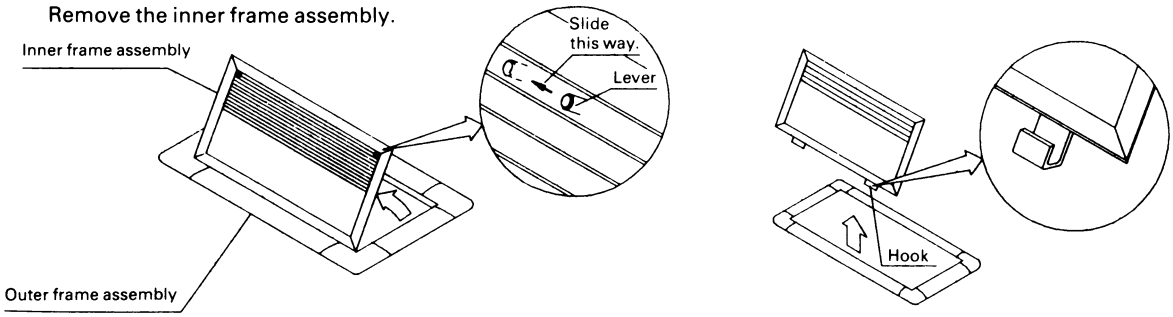

- Slide the inner frame assembly's lever and pull up the inner frame assembly.
- Unhook the inner frame assembly off the hook holes.

C: 1PA43807D

③ Installing the outer frame assembly

- This decoration panel can be installed to the air-conditioner body either directly or using a canvas for decoration panel (optional).

1. For installation using the decoration panel canvas

<Read also the instruction manual accompanying the decoration panel canvas.>

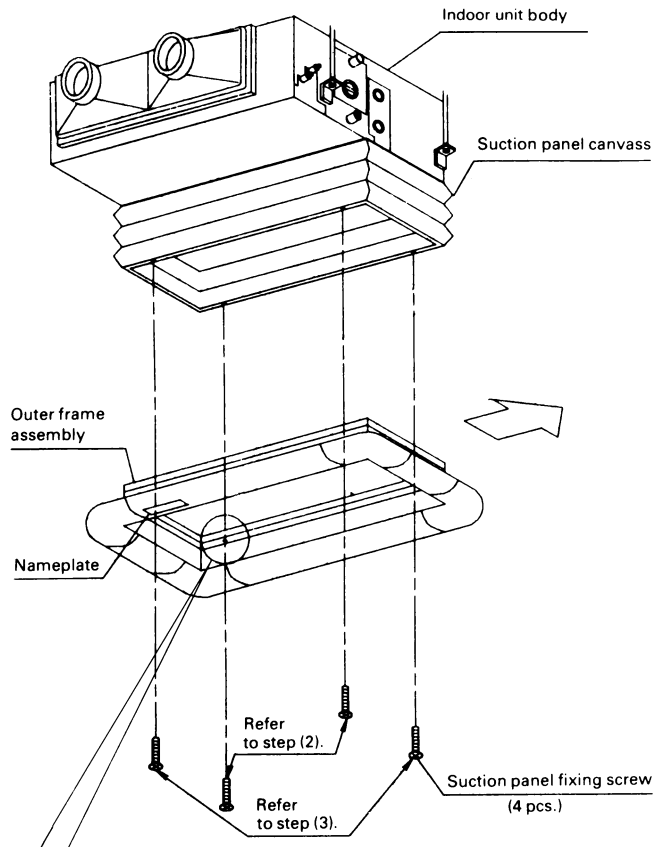

(1) Install the decoration panel canvas to the indoor unit body. (Make the tightening length of the screws about 10 mm.)
(2) Mount two suction decoration panel fixing screws to the decoration panel canvas and temporarily tighten them.
(3) Move the outer frame assembly in the direction of the arrow to rest it on the two screws temporarily.

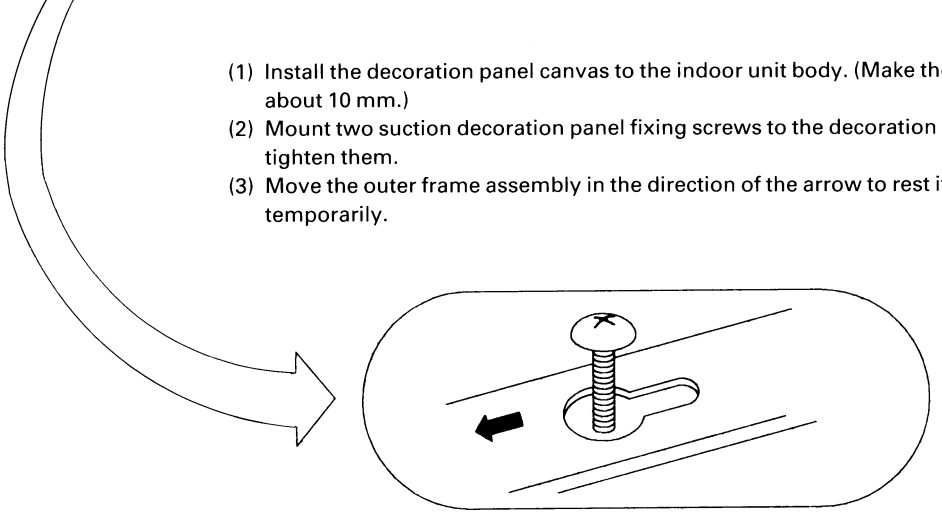

C: 1PA43807D

(4) Mount the rest two screws to the suction panel canvass and tighten all the four screws securely until the sealing material becomes 10 to 15 mm thick.

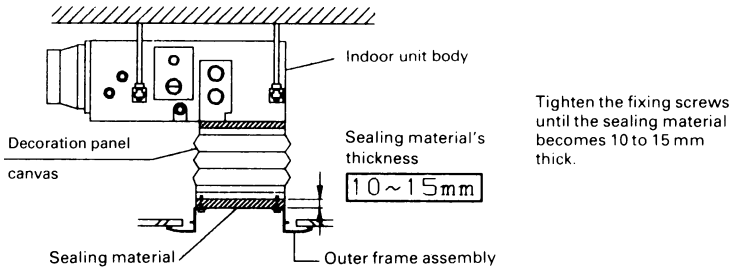

(5) Use the chain and turnbuckle supplied for the decoration panel canvas to make no gap between the canvas and the ceiling

<Install the suction panel to the indoor unit body in the correct direction with the nameplate on the panel coming to the position shown in the left figure.>

2. For direct installation

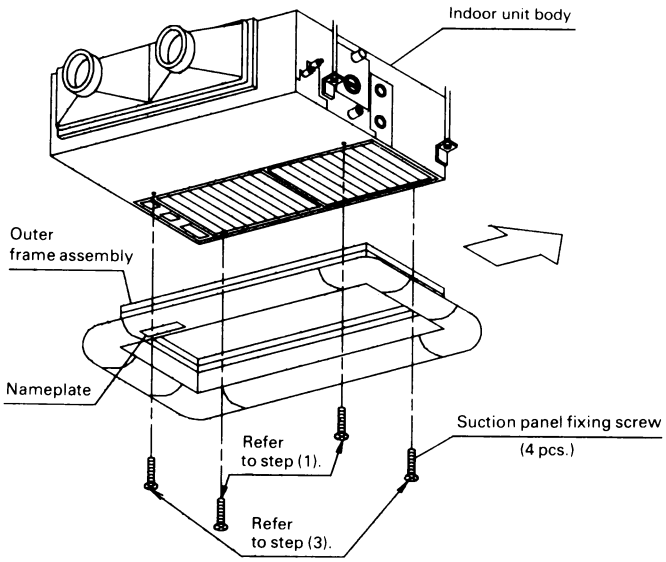

(1) Mount two decoration panel fixing screws to the indoor unit body and tighten them temporarily. (Make the tightening length of the screws about 10 mm.)
(2) Move the outer frame assembly in the direction of the arrow to rest it on the two screws temporarily.
(3) Install the outer frame assembly by following the steps (3) and (4) in **"1. For installation using the decoration panel canvas"**.

Note: In case there is a gap between the decoration panel and the ceiling, adjust the height of the indoor unit. (Refer to the indoor unit installation manual.)

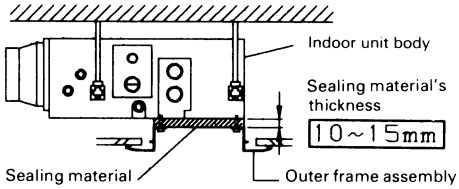

<Install the decoration panel to the indoor unit body in the correct direction with the nameplate on the panel coming to the position shown in the left figure.>

C: 1PA43807D

④ Installing the inner frame assembly

- Install the inner frame assembly to the outer frame assembly by following the reverse steps mentioned in **"2. Preparing the decoration panel"**.

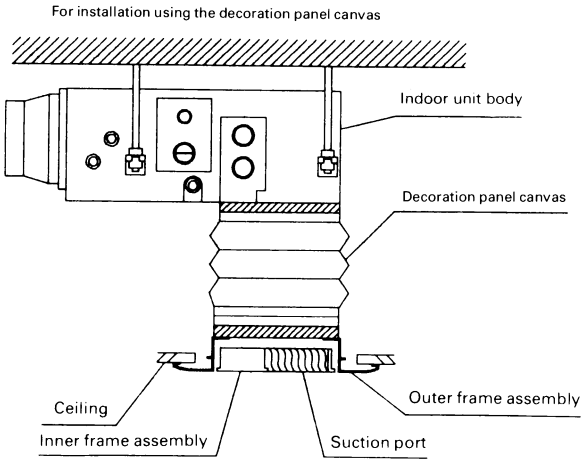

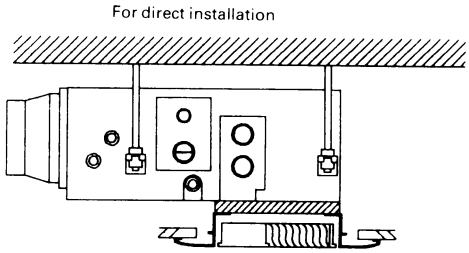

<Ceiling materials can be attached to the inner frame assembly. For their installation, take the following steps.>

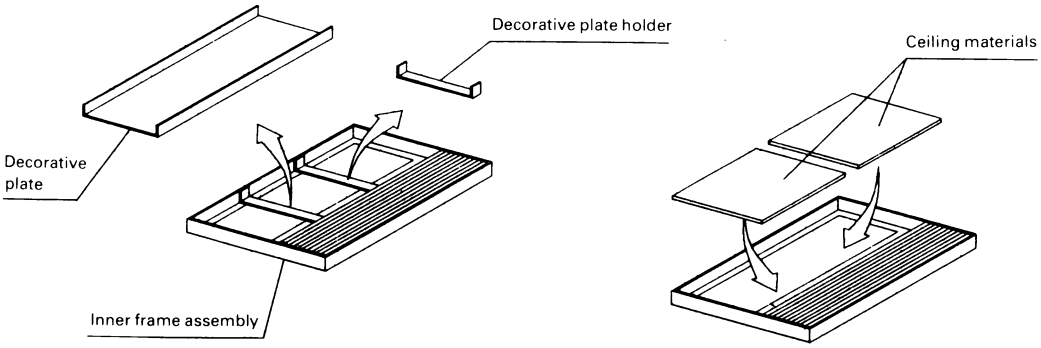

(1) Remove the decorative plate holder from the inner frame assembly.
(2) Remove the decorative plate and place the ceiling materials instead.
(3) Using the decorative panel holder removed in the step (1), fix the ceiling material.

Note:
Installation of the ceiling materials makes the decorative panel unnecessary. Make the ceiling materials less than 15 mm thick.

C: 1PA43807D

9.2 KTBJ25K36W, KTB25KA56 / 80 / 160W — Service Access Panel

KTBJ25K36W

Item \ Model		KTBJ25K36W	KTB25KA56W	KTB25KA80W	KTB25KA160W
Colour		W : White			
Accessories		Installation manual.			
Mass	kg	6.0	6.5	9.0	10.7

Item \ Model		KTBJ25K36T KTBJ25K36F	KTBJ25K56T KTBJ25K56F	KTBJ25K80T KTBJ25K80F	KTBJ25K160T KTBJ25K160F
Colour		T : Brown, F : Fresh white			
Accessories		Installation manual.			
Mass	kg	6.0	6.5	9.0	10.7

Caution

- Ceiling joist and ceiling joist support required. (Locally procured.)

Dimensions Unit (mm)

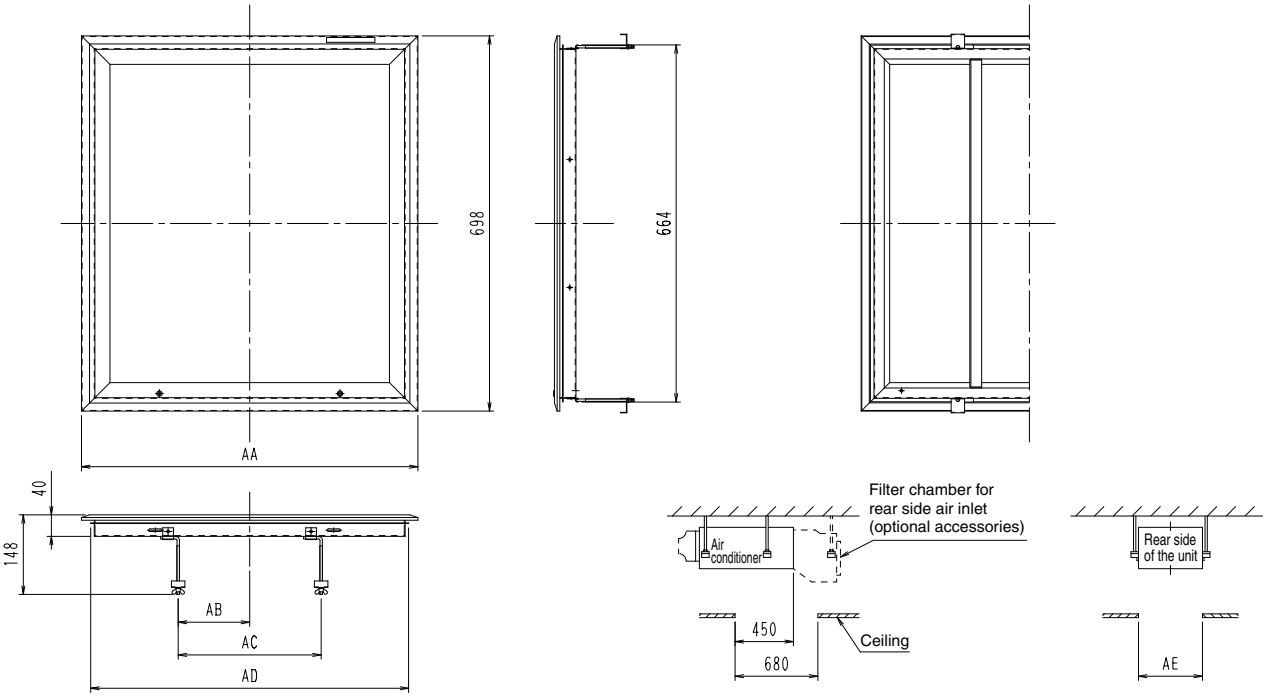

Model	Colour	AA	AB	AC	AD	AE
KTBJ25K36W	White	626	115	266	591	606
KTBJ25K36T	Brown	626	115	266	591	606
KTBJ25K36F	Fresh white	626	115	266	591	606
KTB25KA56W	White	776	190	416	741	756
KTBJ25K56T	Brown	776	190	416	741	756
KTBJ25K56F	Fresh white	776	190	416	741	756
KTB25KA80W	White	1076	340	716	1041	1056
KTBJ25K80T	Brown	1076	340	716	1041	1056
KTBJ25K80F	Fresh white	1076	340	716	1041	1056
KTB25KA160W	White	1476	540	2X558=1116	1441	1456
KTBJ25K160T	Brown	1476	540	2X558=1116	1441	1456
KTBJ25K160F	Fresh white	1476	540	2X558=1116	1441	1456

JC: D3K1126A

- The inspection hatch can be made to look nice with the service access panel.
- Thin 10 mm design for the exposed part.

Installation Manual

AIR CONDITIONER

Directions for Mounting Access Panels

READ THESE INSTRUCTIONS CAREFULLY BEFORE INSTALLATION.

●KEEP THIS MANUAL IN A HANDY PLACE FOR FUTURE REFERENCE.

Before Mounting the Panel

1. Prepare an opening on the ceiling.

Built-In Type

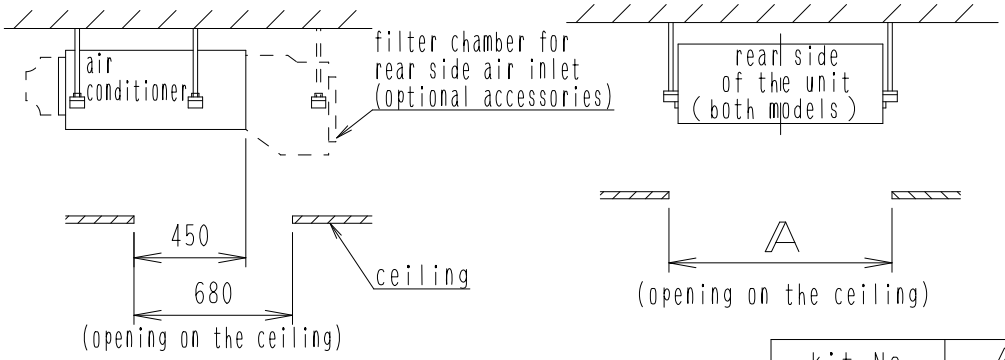

Duct Type

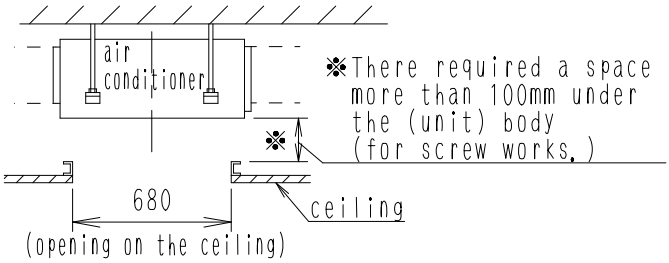

kit No.	A
KTBJ25K36	606
KTBJ25K56 KTB25KA56	756
KTBJ25K80 KTB25KA80	1056
KTBJ25K160 KTB25KA160	1456

2. Mount the ceiling structure guide on the edge of the ceiling structure.

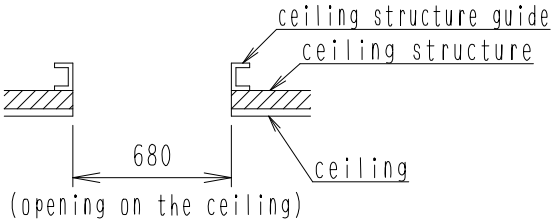

Service Works for Duct Type Models

Service works for maintenance shall be done (accessed) from the ※ space (the above).
Please prepare short-length screw drivers (100mm or less.)

3P225173A

Mounting the Panel

1. Remove the inside frame assembly.
   - Turn the lock 90° to the left with a flat-top screw driver or a coin to open the inside frame assembly.

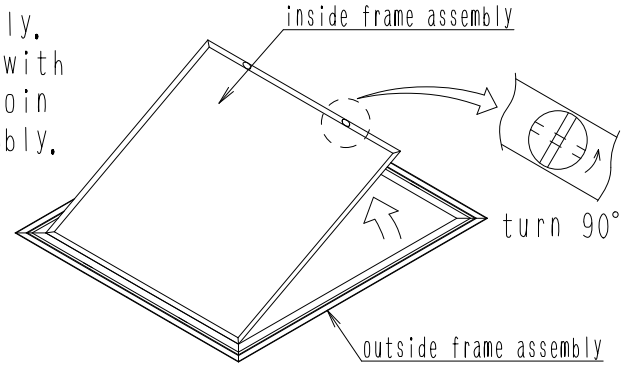

2. Mount the outside frame assembly on the ceiling.
   - Fasten the frame assembly to the ceiling and the guide with metal fittings and wing nuts.

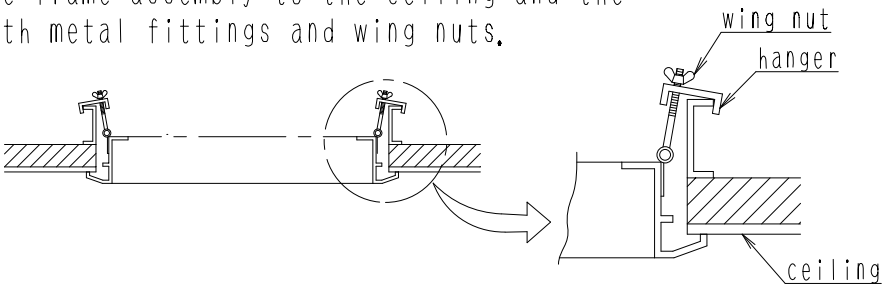

3. Mount the inside frame assembly to the fixed outside frame assembly.

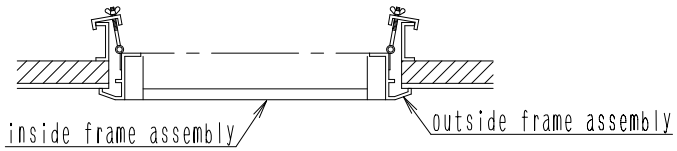

Mounting of Ceiling Materials

Ceiling materials can be optionaly mounted to the inside frame assembly.
Mounting methods are as follows:-

① Remove the decorative panel fixing metal of the inside frame assembly.

② Take out the decorative panel and mount the ceiling materials instead.

③ Put back the fixing metal (①) to hold the ceiling materials.

(Note) Decorative panel is not required when mounting ceiling materials.

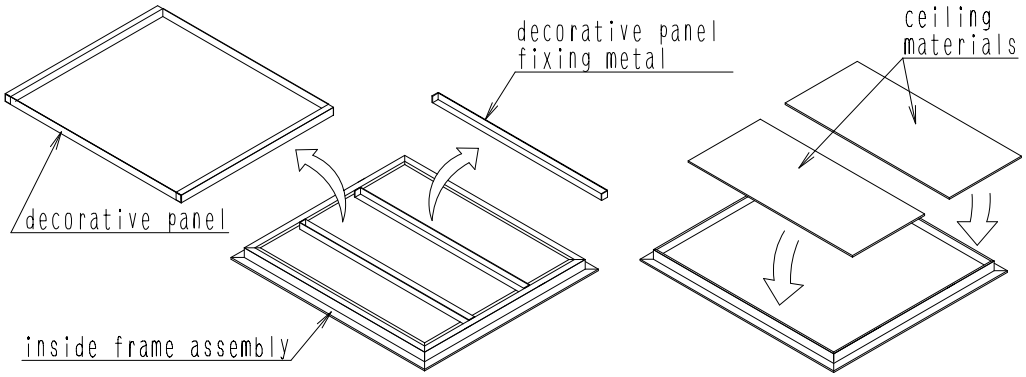

3P225173A

9.3 KNM25K32 / 50 / 63 / 125V1 — Natural Evaporating Pan Type Humidifier

Model		KNM25K32V1	KNM25K50V1	KNM25K63V1	KNM25K125V1
Humidifying Capacity	L/h	0.4	0.6	1.0	1.8
Power Supply		Single Phase, 220-240V 50Hz			
Power Consumption	W	12			
Water Inlet Port		1/2B			
Water Outlet Port		VP25 (External dia. ϕ32) (drain pipe at indoor unit)			
Accessories		Humidifier assembly, Solenoid valve box assembly, Feed water line assembly, Service cover 1, Service cover 2, Installation manual, Clamp, Fixing screw, Guide rail fixing plate, Binding band, Installation caution label, Feed water pipe			

3

Installation Manual

1. Preparation

Tools required for the installation work:

Wrench (nominal sizes 14 and 17), adjustable wrench, Phillips screwdriver, pliers, pipe cutter, flaring tool, drill, hammer, etc.

2. Installation precautions

Keep the following points in mind to run the kit smoothly at full capacity. Be sure to correct any problem before use.

■ Installation place

1. Make sure that the beam or ceiling is stable and strong enough to withstand the product weight. Some structural members of a building may be too weak to set up the kit.
2. Place the kit at a level or with the drain pipe side slightly tilted down (1° or less). Otherwise water may leak out.

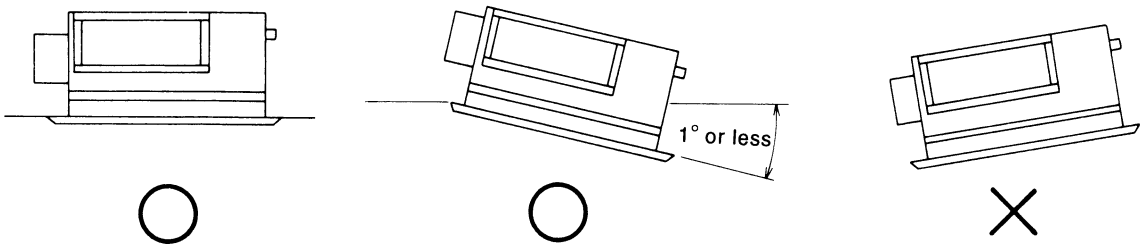

3PA36474-16M

3. For easier servicing, ensure the following open access space.
   (1) When installing the half-size suction panel Keep the dimensions illustrated below. Provide an inspection opening 450x450 mm or larger.
   ① For direct set-up

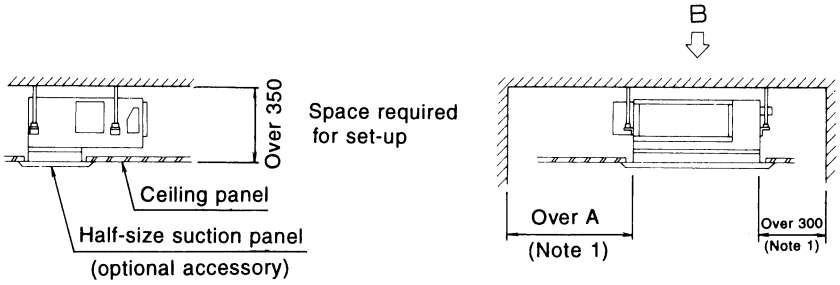

Kit	A
KNM25K32V1	800
KNM25K50V1	800
KNM25K63VI	800
KNM25K125V1	1200

Note 1: Open access space

② For set-up together with the suction panel canvas

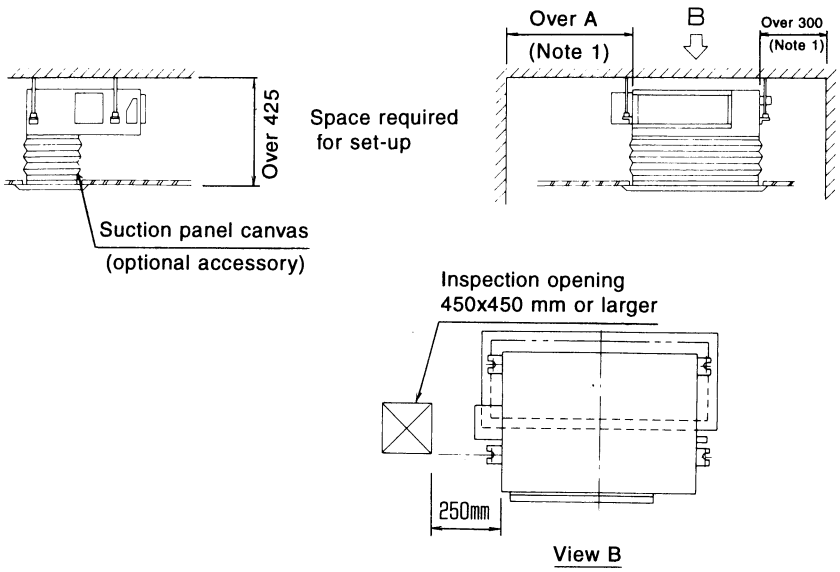

4. Avoid the following places: NO FIRE zones, places exposed to combustible gas, corrosive gas, salty dust, metallic dust, water vapor, oil mist and water drops.
   A fire or malfunction may result.
5. Make sure that the air is not blown out directly to people in the room. If exposed to the blown air in winter or spring or autumn, you may feel chilly.

3PA36474-16M

3. Installation procedure

When the ceiling work is not completed, the kit can be fixed before or after the installation of air conditioner. However, the kit is installed easier before the installation of air conditioner. Illustrations show the fixing before installation.

[Precaution]

When this kit and the auxiliary electric heater kit are both mounted on the air conditioner, be sure to set up the auxiliary electric heater first into position.

3-1 Removal of parts of air conditioner body

Illustrations and the number of screws may differ from those shown in the figure below depending on models.

(1) Remove the bottom plate.

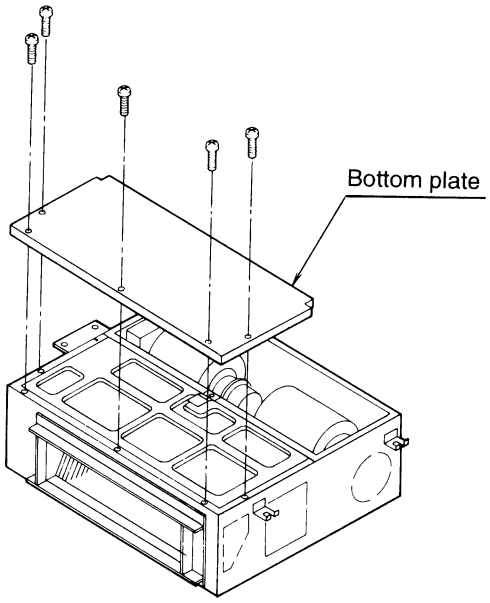

(2) Remove the drain pan holder plate and the drain socket cover. Then, remove the drain pan. While preventing a strong force from being applied to the drain socket, lift the drain pan directly above little by little and remove the drain pan.

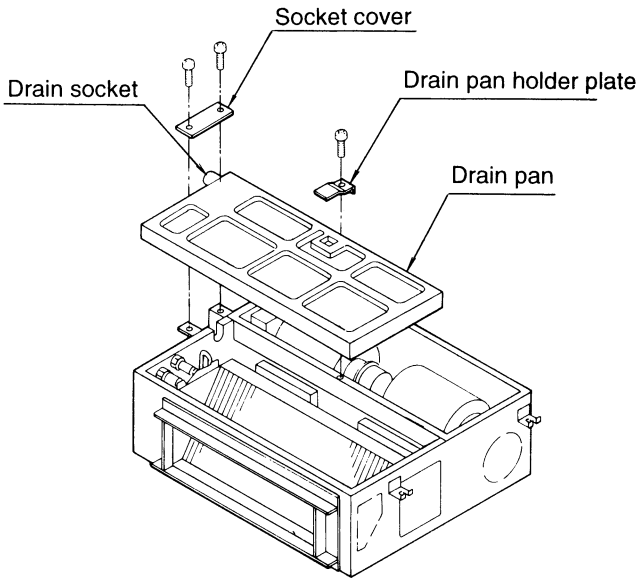

3PA36474-16M

3-2 Setting up the humidifier assembly (Be sure to wear work gloves or the like.)

(1) Make two knockout openings in the side.

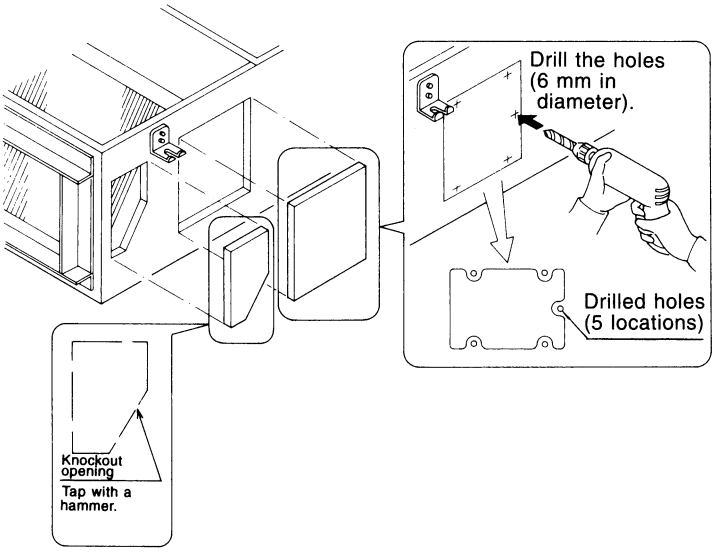

(2) Fix the guide rail fixing plate on the heat exchanger mounting plate.

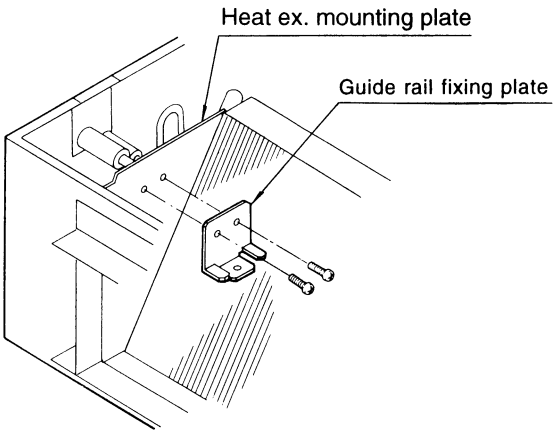

(3) Fit the humidifier assembly on the guide rail bracket and the heat exchanger mounting plate.

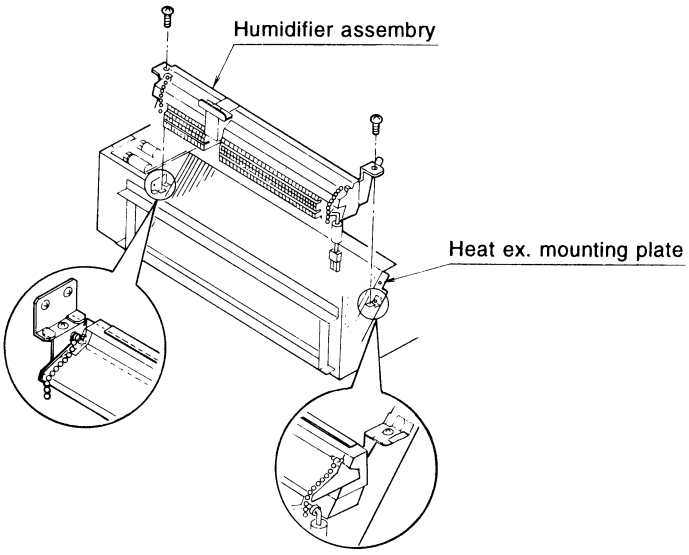

3PA36474-16M

3-3 Setting up the solenoid valve box assembly

(1) Attach the solenoid valve box assembly on the side of the air conditioner.

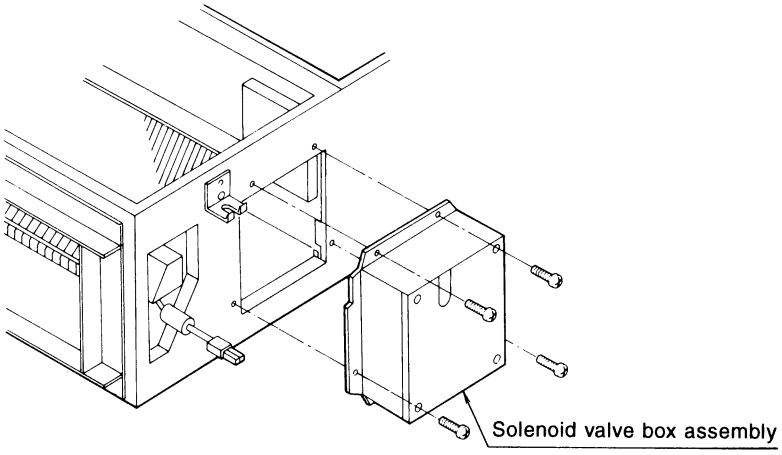

(2) Remove the solenoid valve box cover and take out the cushioning material.

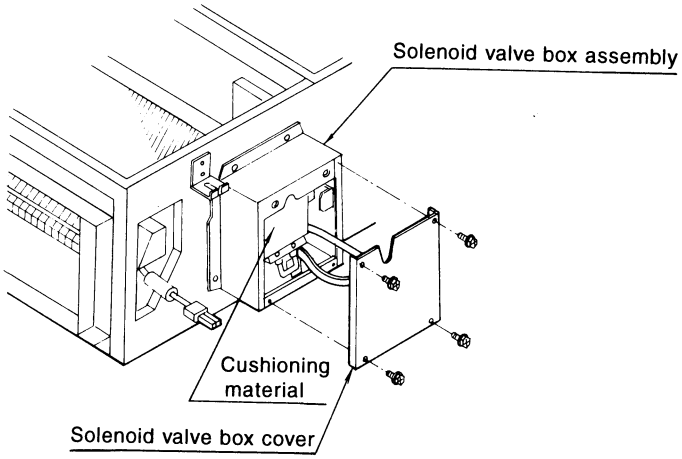

(3) Fix the binding band.

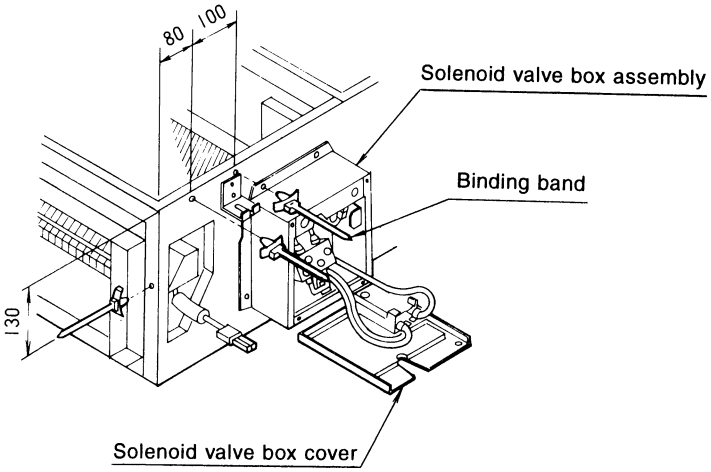

3PA36474-16M

(4) Connect the feed water line assembly. Using a wrench, tighten up the flare nuts at the solenoid valve connection.

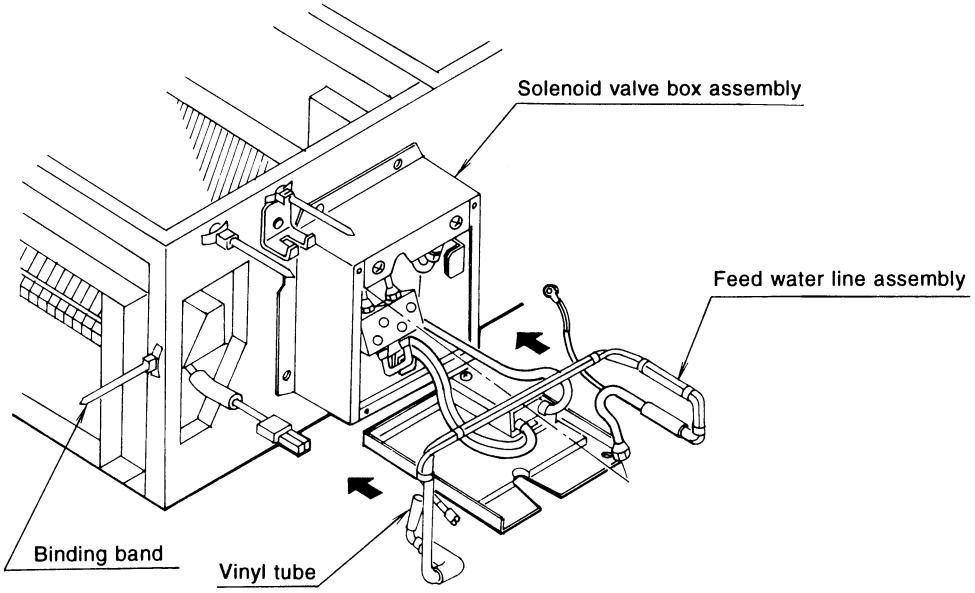

(5) Insert the vinyl tube of the feed water line end into the water supply drain pan.

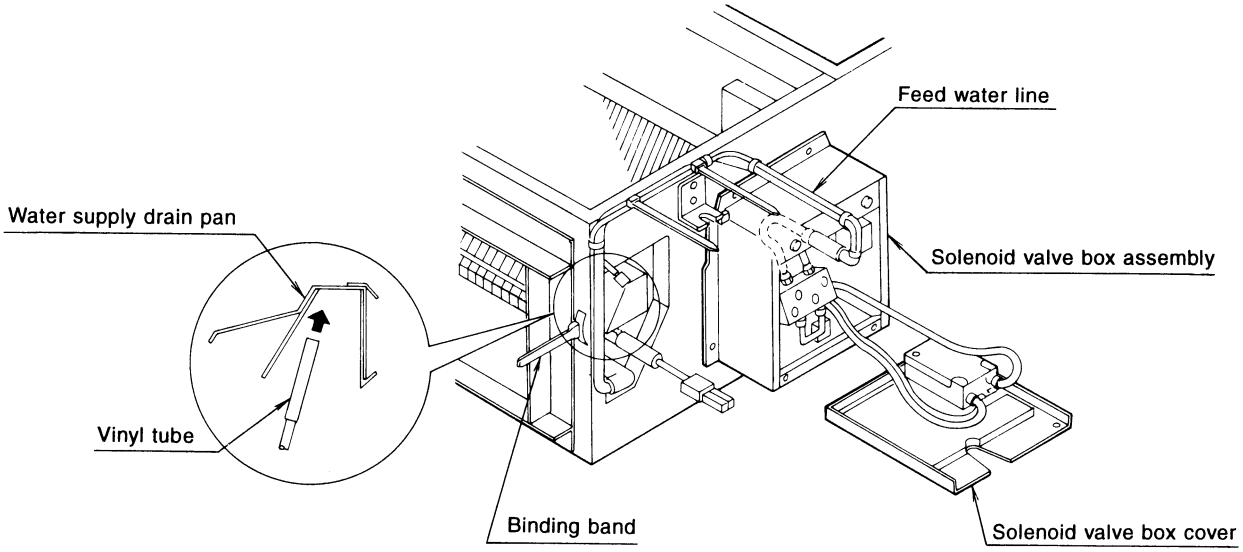

3PA36474-16M

(6) Attach the service cover 1.

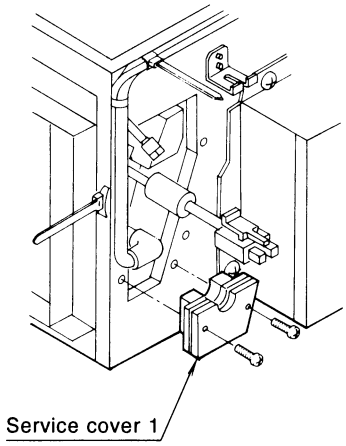

(7) Make sure the above vinyl tube is tight in the water supply drain pan. Pass the float switch lead wire through the service cover 2.

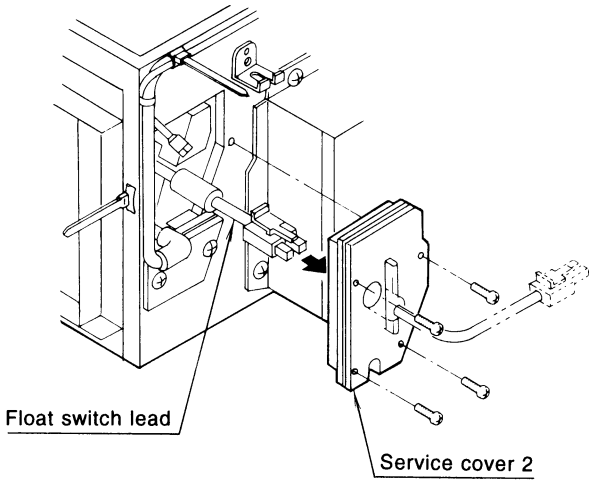

(8) Couple the connector of the float switch lead wire.

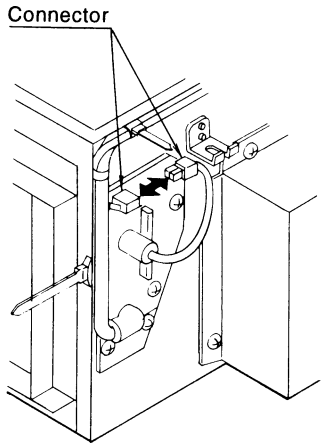

(9) Fix the feed water line with the binding band.

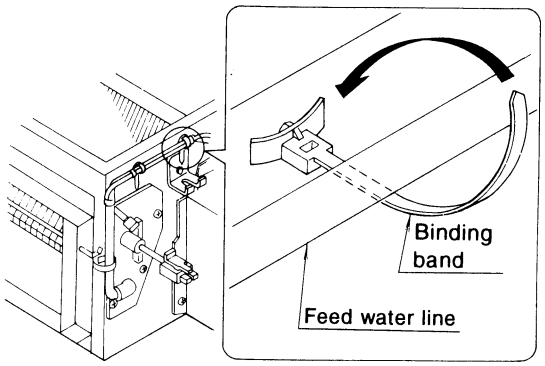

3PA36474-16M

4. Replacement the wetted elements from the side (with half-size suction panel)

(1) Turn off the power and close the main valve of the feed water line.

(2) Disconnect the float switch connectors.

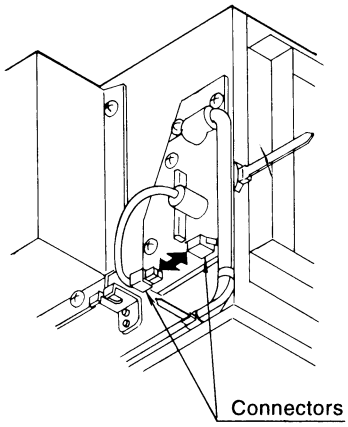

(3) Remove the service covers.

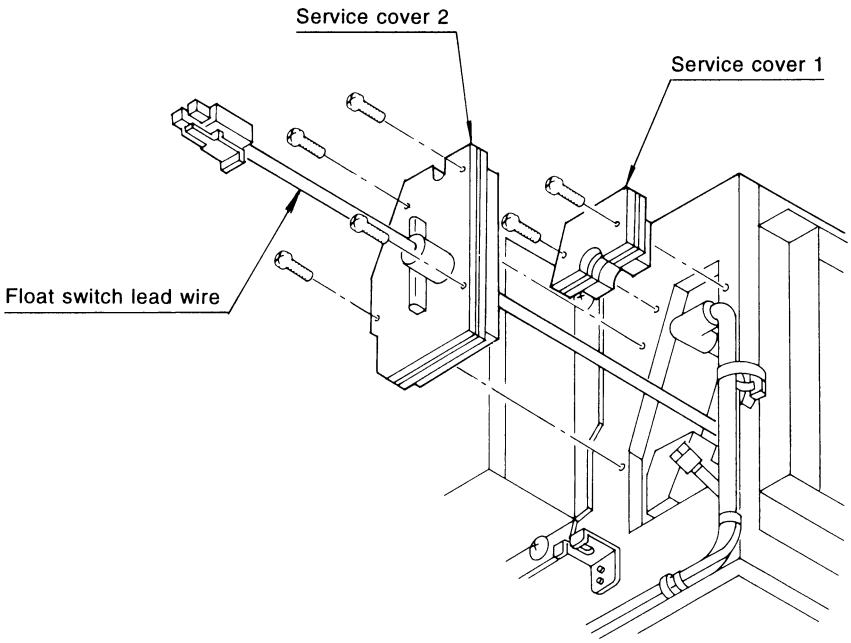

3PA36474-16M

(4) Replace the wetted elements.

① Draw the entire humidifier assembly along the guide rail out of the side of the air conditioner.

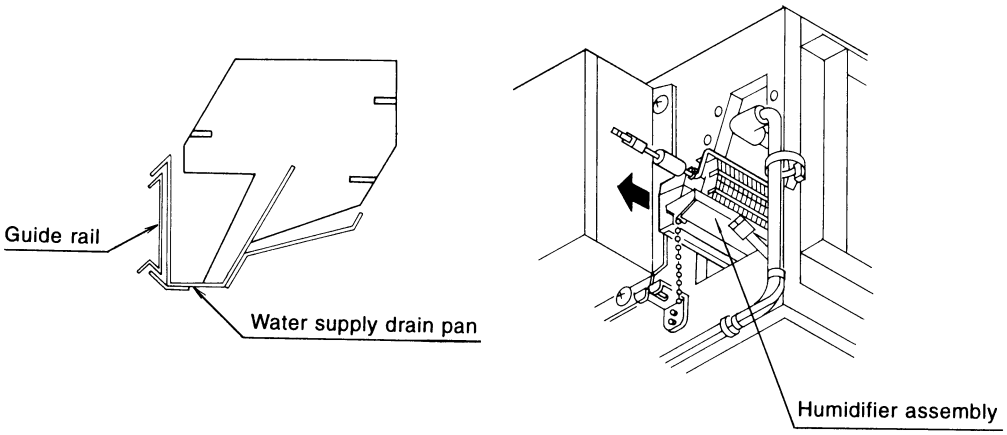

② Remove the wetted element retainer.

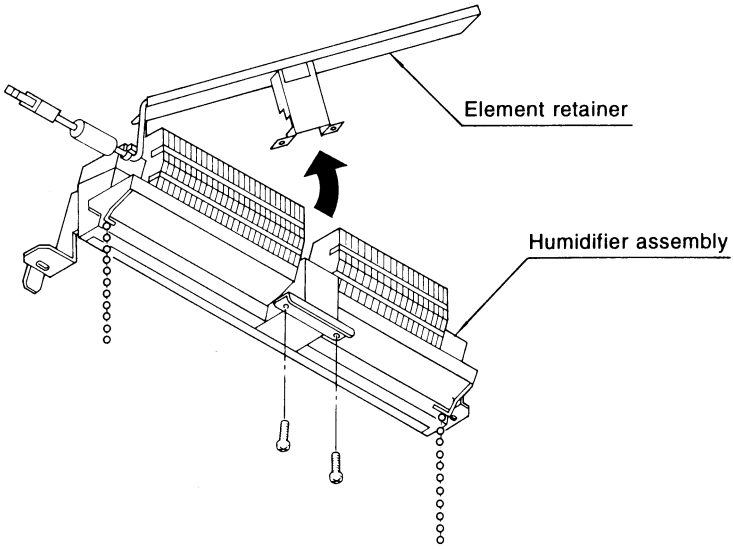

③ Remove the wetted elements.

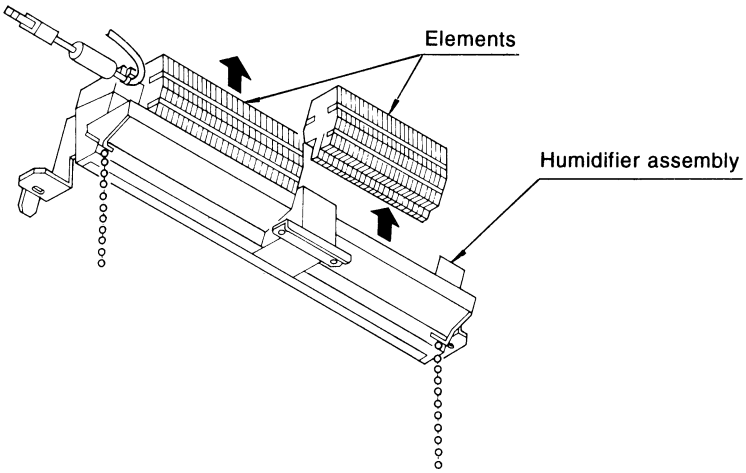

3PA36474-16M

④ Take out the replacement elements.

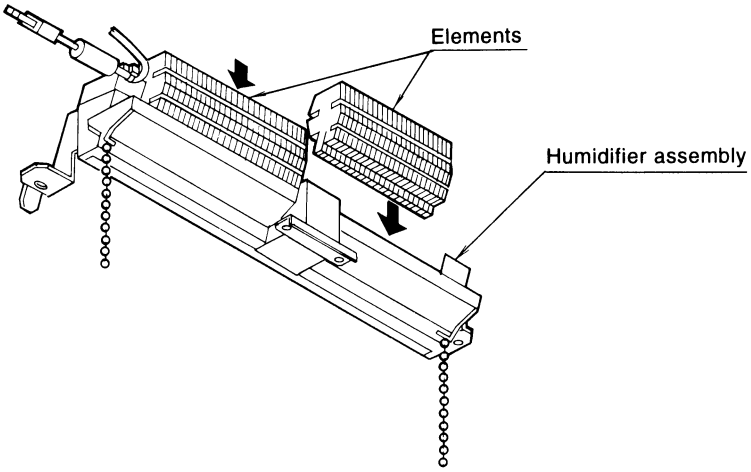

(5) Fit all the parts back into position in the reverse order.

[Precaution]

Mount the humidifier assembly on the guide rail as shown below. Push it deep into position. At this time, check the following points; **that the vinyl tube at the feed water line end is tight in the water supply drain pan, and that the water conveyance chains (2 pcs.) are hanging straight down.** Finally place the access covers back.

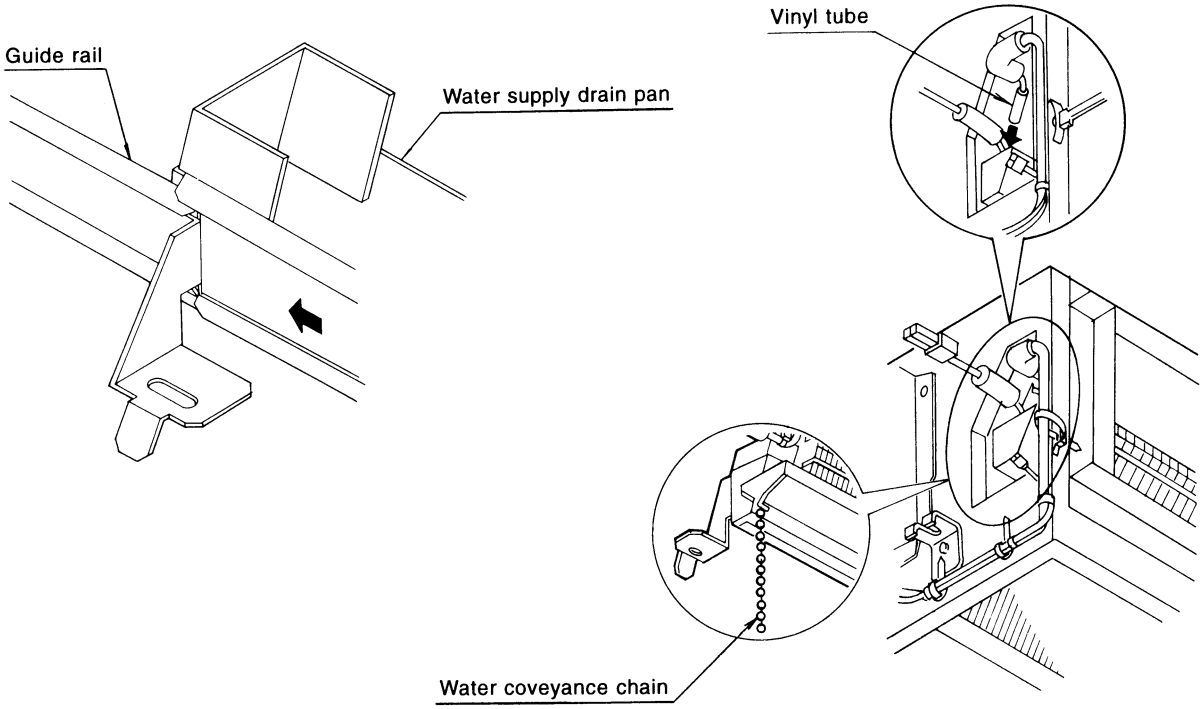

5. Repair and other information

For details, refer to "TROUBLE SHOOTING" in the operation manual attached to the outdoor unit.

3PA36474-16M

Precautions

After suspending the indoor unit, be sure to check the following items for the humidifier before performing duct work in order to prevent water leaks.

① The vinyl tube at the end of the water supply pipe must be in the water supply drain pan.
② The water conveyance chain must hang straight down.

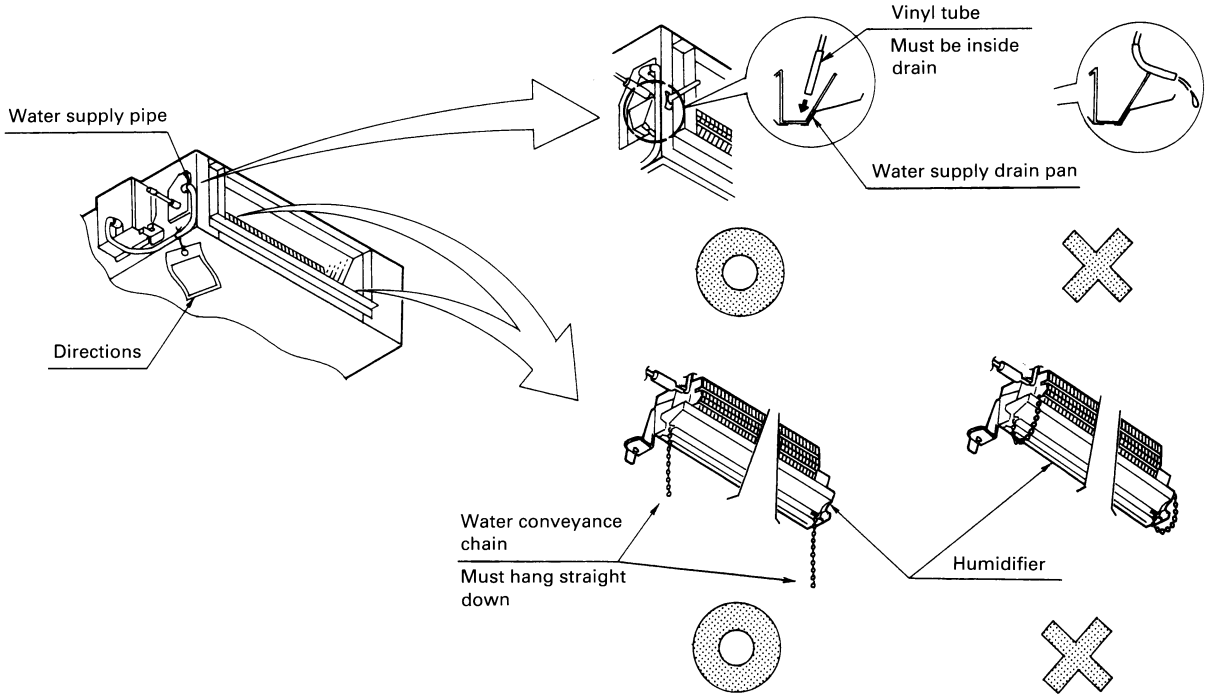

3PA36474-16M

9.4 KEA25K32 / 50 / 63 / 100 / 125VE — Auxiliary Electric Heater

Item \ Model			KEA25K32VE	KEA25K50VE	KEA25K63VE	KEA25K100VE	KEA25K125VE
Power supply			Single phase, 50Hz/60Hz 220-240V/220V				
Switching	Full capacity	kW	0.75	1.2	1.4	2.1	2.8
	Partial		Not Applicable				
Heater operating current		A	3.8	6.0	7.0	10.5	14
Wiring			Parallel Connection				
Room temperature control			Automatic by temperature controller (Computer-controlled thermo-couple inside AC unit)				
Safety device			Current fuse				
Accessories			Auxiliary electric heater assembly. Magnetic contact box assembly. Electric wiring ties. Safety label. Installation manual. Screws.				

Installation Manual

1. Preparation

1. Electric work must be performed by a qualified electrician.
2. Changes to electrical equipment
   Fitting an auxiliary electric heater means that a large power supply is required. In many cases the electrical equipment (lead-in power wirings, switches, transformers, etc.) and electric power contact are insufficient and changes are required.
3. Tools required for the installation work
   Screwdrivers, pliers, cutters, nippers, pincers, etc.

2. Installation procedure

When the ceiling work is not completed, the kit can be fixed before or after the installation of air conditioner. However, the kit is installed easier before the installation of the air conditioner. Illustrations show the fixing before installation.

NOTE) When installing both the kit and a natural evaporating pan type humidifier, be sure to install the kit first.

3PA36474-14K

2-1 Removal of parts of air conditioner body

Illustrations and the number of screws may differ from those shown in the figure below depending on models.

(1) Remove the bottom plate.

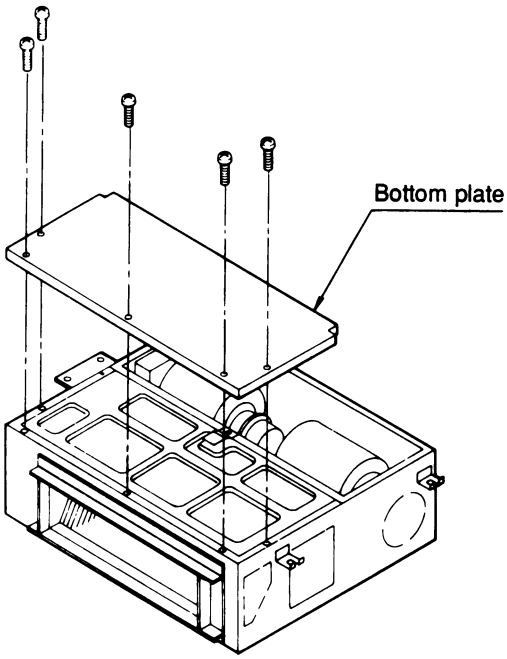

(2) Remove the drain pan holder plate and the drain socket cover. Then, remove the drain pan. While preventing a strong force from being applied to the drain socket, lift the drain pan directly above little by little and remove the drain pan.

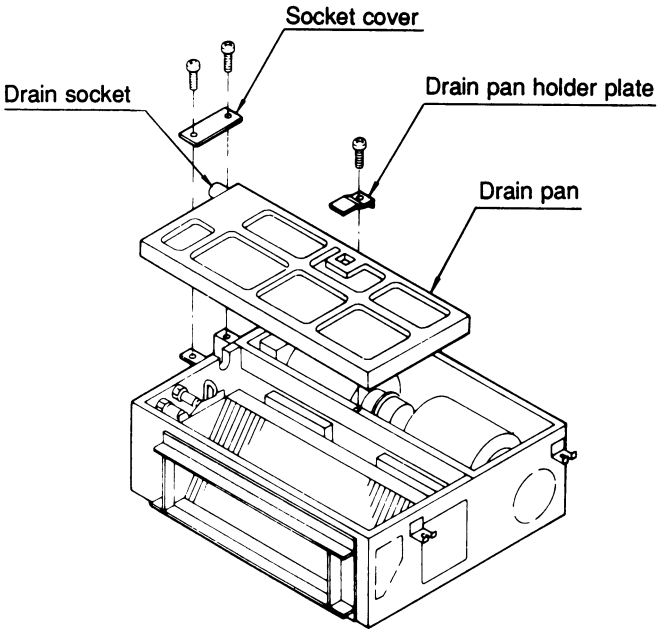

3PA36474-14K

2-2 Installation of electric heater assembly

Pass the electric wiring of the electric heater through the rubber bush of the fan side plate and insert the electric heater assembly into the gap between the heat exchanger and the fan assembly.

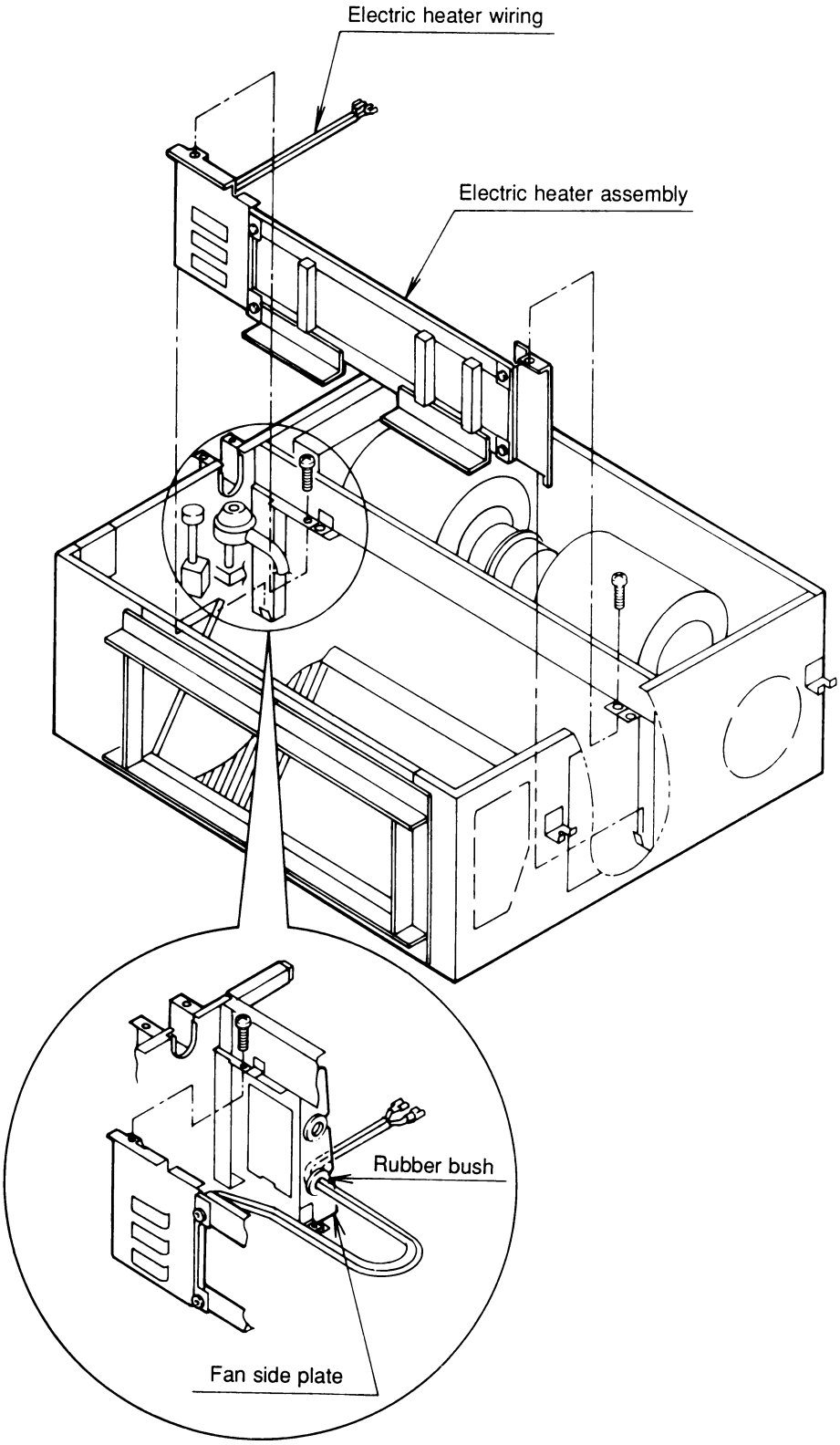

3PA36474-14K

[Details of installation]

Before screwing up, confirm that the electric heater assembly is securely fitted on the hook and that tap holes are properly aligned.

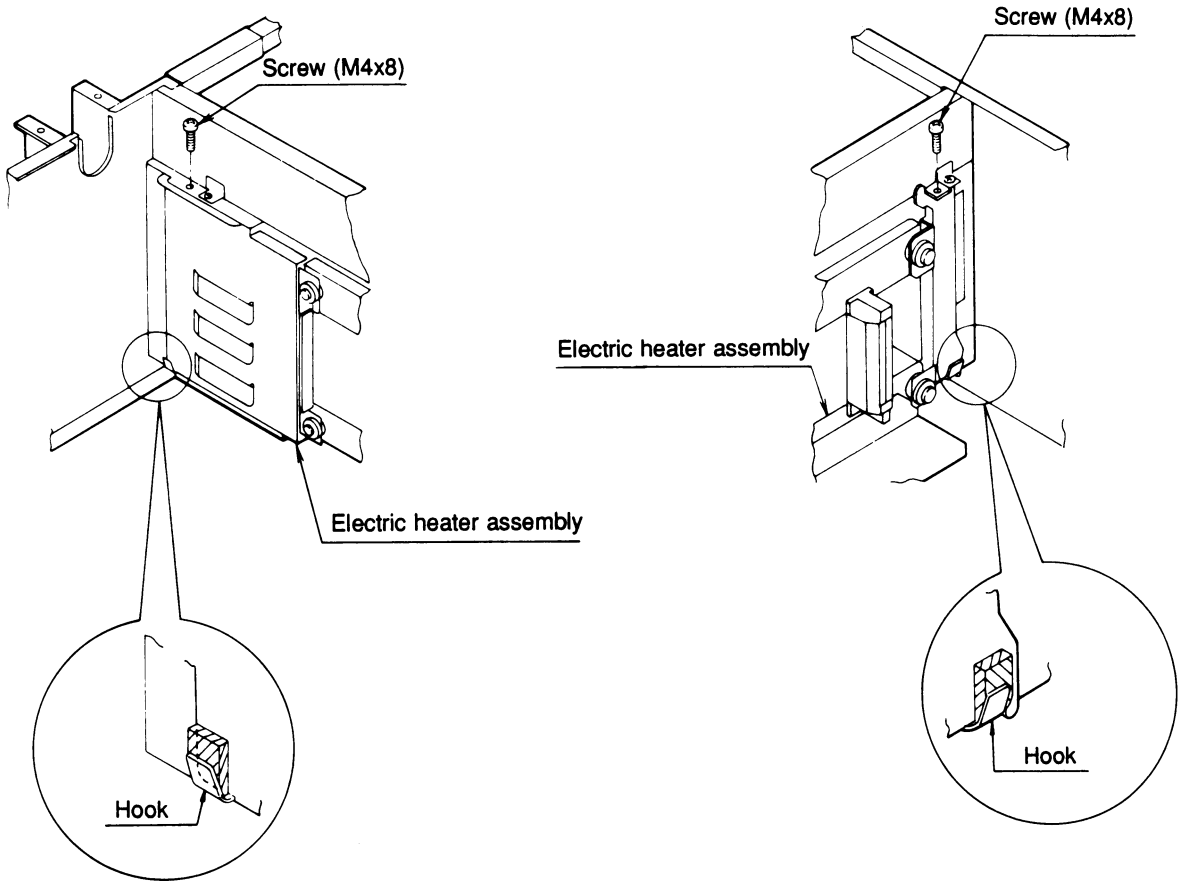

3PA36474-14K

2-3 Removal of control box

(1) Remove the electric parts box lid and the control box.

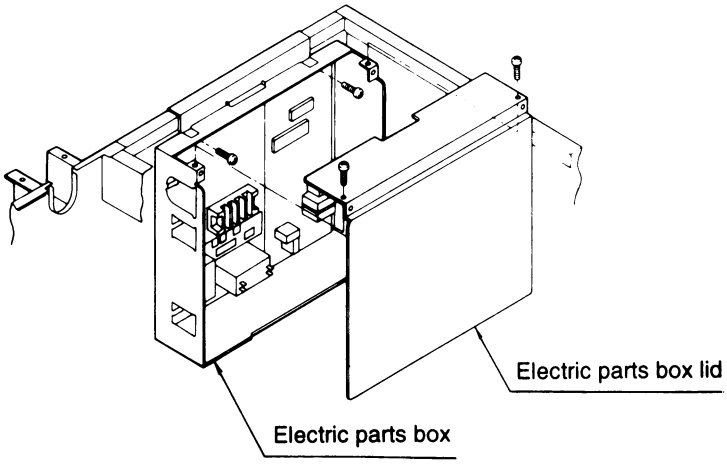

(2) Pull out the electric parts box.

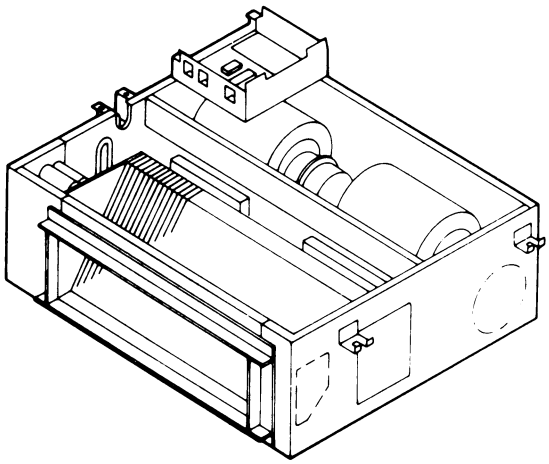

If the air conditioner is installed already, remove the electric parts box lid, pull out the electric parts box, and suspend the electric parts box on the air conditioner using the hook on the back of the electric parts box.

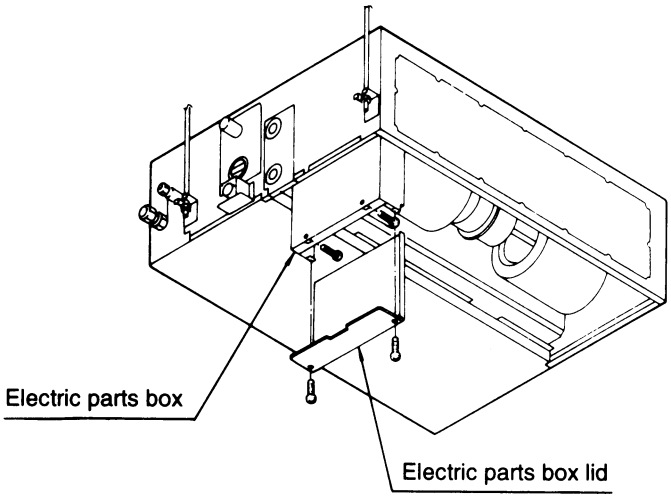

3PA36474-14K

9.5 KAFJ252L36, KAFJ253L36 KAF252LA56 / 80 / 160, KAF253LA56 / 80 / 160 — High-Efficiency Filter

KAF252LA56

Dimensions Unit (mm)

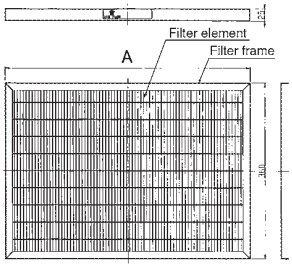

Model		A
KAFJ252L36	KAFJ253L36	500
KAF252LA56	KAF253LA56	650
KAF252LA80	KAF253LA80	448×1 502×1
KAF252LA160	KAF253LA160	698×1 652×1

C: D3K1408B
C: D3K04917
C: D3K04916

- Cannot be water-washed for reuse.
- Below inlet :
  The filter chamber (for High efficiency filter) (KAJ25L36D, KAJ25LA56 / 80 / 160D) is required when the high efficiency filter will be installed.
- Rear inlet :
  The filter chamber (for High efficiency filter) (KAJ25L36B, KAJ25LA56 / 80 / 160B or KDF-25A36 / 56 / 80 / 160B) is required when the high efficiency filter will be installed.

65 (colorimetric method)

Item \ Model		KAFJ252L36	KAF252LA56	KAF252LA80	KAF252LA160
Airflow rate	(m^3/min)	9	14	19	38
Average efficiency	%	65 (colorimetric method)			
Initial pressure loss	Pa	16 or less	14 or less	14 or less	22 or less
Final pressure loss	Pa	98			
Life	h	2,500 (dust concentration 0.15 mg/m^3)			
Filter element		Flame-resistant type (with mildew-proof)			
Number of sheets included		1	1	2 (each 1)	2 (each 1)
Mass	kg	0.5	0.6	0.9	1.2

90 (colorimetric method)

Item \ Model		KAFJ253L36	KAF253LA56	KAF253LA80	KAF253LA160
Airflow rate	(m^3/min)	9	14	19	38
Average efficiency	%	90 (colorimetric method)			
Initial pressure loss	Pa	21 or less	24 or less	24 or less	34 or less
Final pressure loss	Pa	98			
Life	h	1,800 (dust concentration 0.15 mg/m^3)			
Filter element		Flame-resistant type (with mildew-proof)			
Number of sheets included		1	1	2 (each 1)	2 (each 1)
Mass	kg	0.5	0.6	0.9	1.2

Note: The filter chamber is required when the high efficiency filter will be installed.

Installation Manual

1. Cassette fan mounted / High-efficiency filter

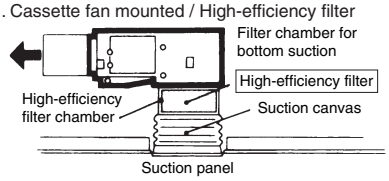

2. Ceiling return / High efficiency filter

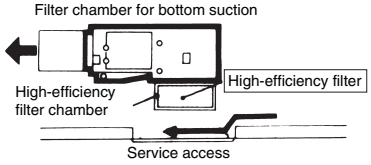

3. Duct fun mounted / high efficiency filter

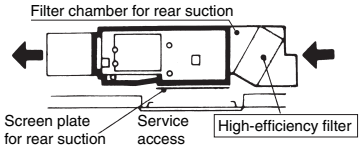

9.6 KAJ25L36D, KAJ25LA56 / 80 / 160D — Filter Chamber for Bottom Suction

KAJ25LA56D

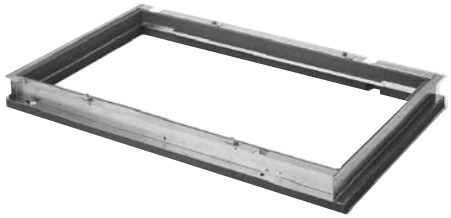

Dimensions Unit (mm)

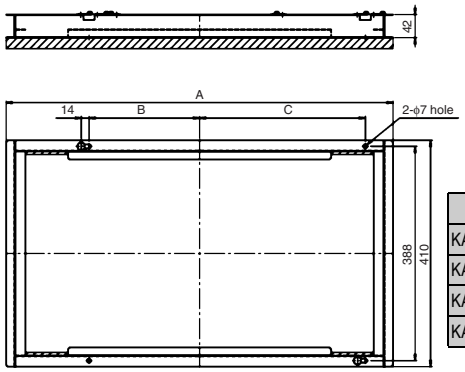

Model	A	B	C	Weight
KAJ25L36D	550	125	225	2.3kg
KAJ25LA56D	700	200	300	2.8kg
KAJ25LA80D	1000	350	450	3.5kg
KAJ25LA160D	1400	550	650	4.0kg

JC: D3K1420B

- If there is not enough pitch in the drain pipe due to the attached cassette, this may be used as a spacer.
- Filter replacement is easily performed.

Item / Model		KAJ25L36D	KAJ25LA56D	KAJ25LA80D	KAJ25LA160D
Inserted filter	65% (colorimetric method)	KAFJ252L36	KAF252LA56	KAF252LA80	KAF252LA160
	90% (colorimetric method)	KAFJ253L36	KAF253LA56	KAF253LA80	KAF253LA160
Mass	kg	2.3	2.8	3.5	4.0
Component parts		Filter chamber. Panel attachment plate. Screws. Installation manual.			

Installation Manual

1. This kit contains the following parts and accessories

Name	Quantity			
	KAJ25L36D	KAJ25L56D KAJ25LA56D	KAJ25L80D KAJ25LA80D	KAJ25L160D KAJ25LA160D
Filter chamber for bottom suction	1	1	1	1
Fixing plate for panel	4	4	4	4
Screws for fixing plate for panel	4	4	4	4
Screws	4	4	4	4
Installation manual	1	1	1	1

2. Required tools

Screwdriver ⊕

3. Operating procedures

(1)Remove the long-life filters of standard accessory from indoor unit. (Fig. 1)

(2)Installation of the bottom suction filter chamber

①Tighten two filter chamber installation screws to the indoor unit. Screw them in deep enough so that they do not fall out of place. (Leave about 30mm of thread exposed.)

②Fit the filter chamber over the screws and slide in the direction of the arrow in fig. 3, to hang the filter chamber on the indoor unit.

③Fit the remaining two installation screws and tighten all four screws until the seal is 10～15mm thick.

(3)Attach the fixing plate for panel to the filter chamber. (Fig. 2)

(4)Fit the high efficiency filter (option) inside the filter chamber and lock in place with the filter lock. (Fig. 2)

Filter chamber for bottom suction	High efficiency filter	
	(65%)	(90%)
KAJ25L36D	KAFJ252L36	KAFJ253L36
KAJ25L56D KAJ25LA56D	KAFJ252L56 KAF252LA56	KAFJ253L56 KAF253LA56
KAJ25L80D KAJ25LA80D	KAFJ252L80 KAF252LA80	KAFJ253L80 KAF253LA80
KAJ25L160D KAJ25LA160D	KAFJ252L160 KAF252LA160	KAFJ253L160 KAF253LA160

4. Cautions for the installation

○Install the filter chamber as explain in these instructions.

○Install the filter chamber in the orientation shown in the right figure.

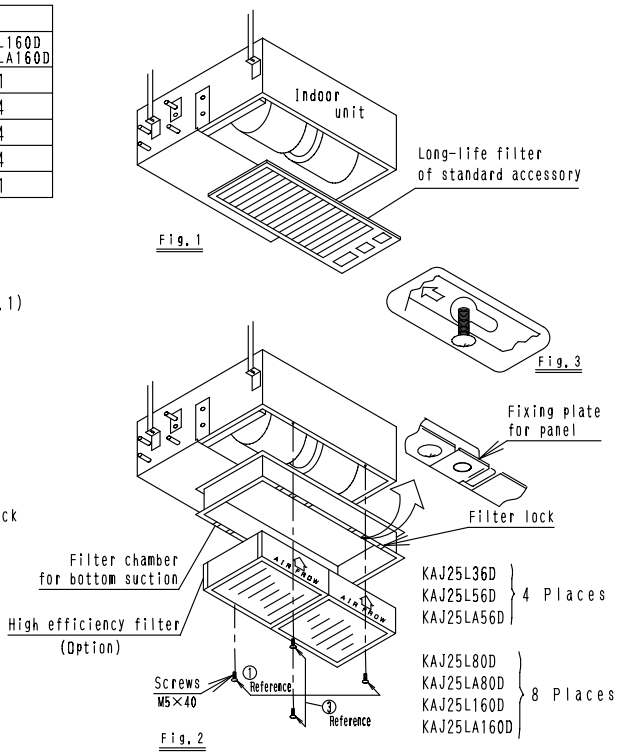

3K016915

9.7 KAJ25L36B, KAJ25LA56 / 80 / 160B — Filter Chamber for Rear Suction

KAJ25LA56B

Dimensions Unit (mm)

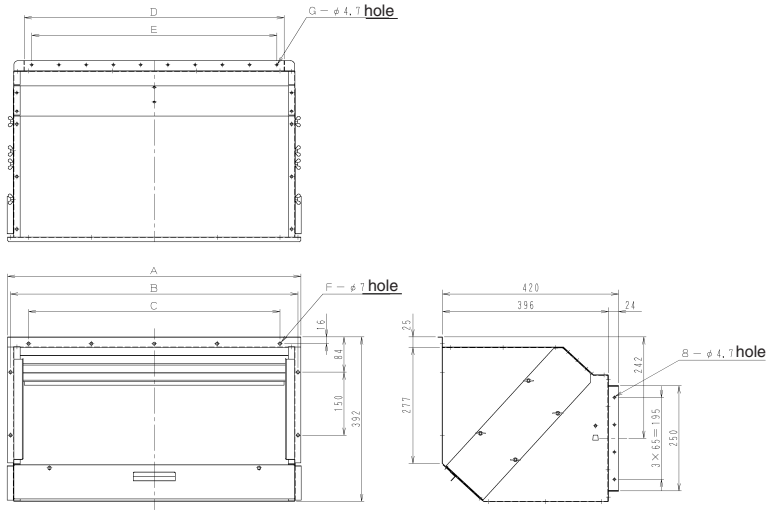

Model	A	B	C	D	E	F	G	Weight
KAJ25L36B	550	536	3×150=450	470	6×65=390	8	14	8.0kg
KAJ25LA56B	700	686	4×150=600	620	9×65=585	9	20	10.0kg
KAJ25LA80B	1000	986	6×150=900	920	13×65=845	11	28	14.0kg
KAJ25LA160B	1400	1386	8×150=1200	1320	19×65=1235	13	40	16.0kg

JC: D3K1419D

- May be used with either the long-life filter or high -efficiency filter.
- The suction duct can also be connected.

Item / Model		KAJ25L36B	KAJ25LA56B	KAJ25LA80B	KAJ25LA160B
Inner dimensions of flange (mm)	Width	470	620	920	1,320
	Length	250			
Inserted filter	65% (colorimetric method)	KAFJ252L36	KAF252LA56	KAF252LA80	KAF252LA160
	90% (colorimetric method)	KAFJ253L36	KAF253LA56	KAF253LA80	KAF253LA160
Mass	kg	8.0	10.0	14.0	16.0
Component parts		Filter chamber. Screen plate for rear suction. Washer for suspension bracket. Screws. Installation manual.			

Installation Manual

Preparation before installation

① Set the suspension bolts in position.
(Location of the suspension bolts)

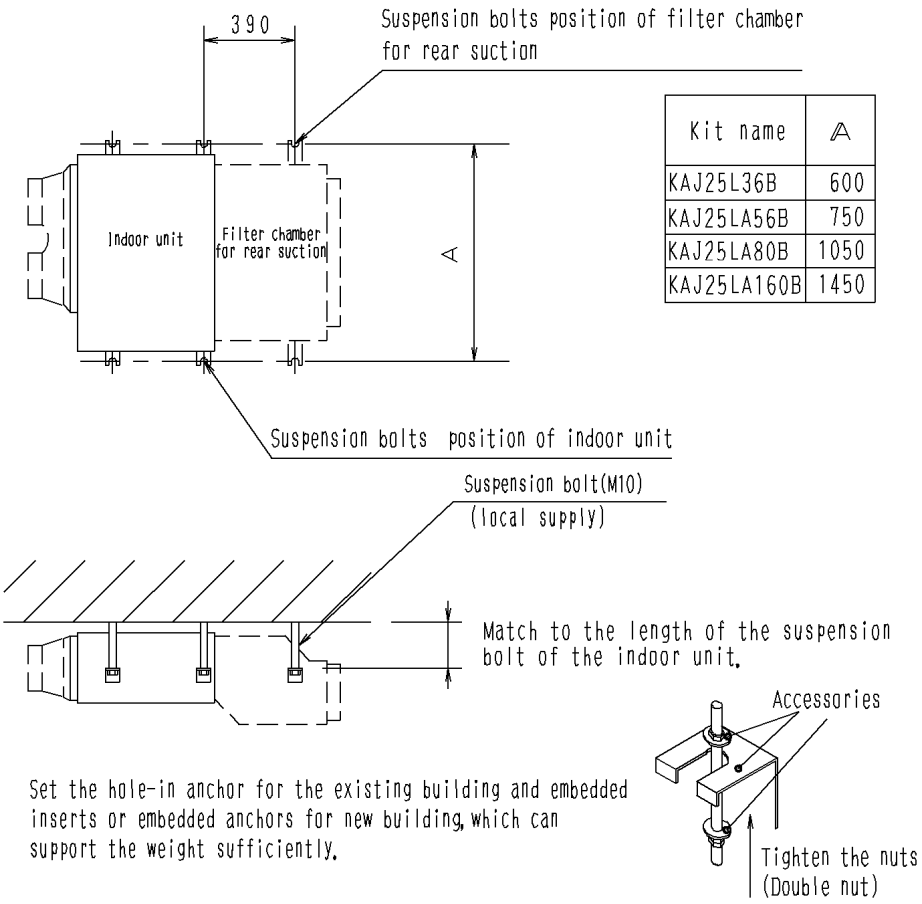

Kit name	A
KAJ25L36B	600
KAJ25LA56B	750
KAJ25LA80B	1050
KAJ25LA160B	1450

Set the hole-in anchor for the existing building and embedded inserts or embedded anchors for new building, which can support the weight sufficiently.

3K016914

Installation of filter chamber

① Remove the long-life filter and the rear plate of the indoor unit.

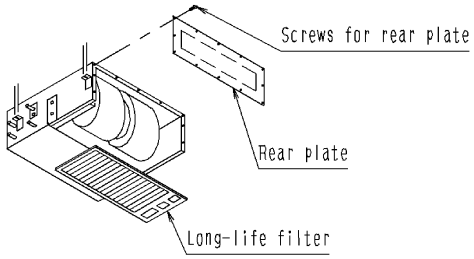

② Set the filter chamber for rear suction to the suspension bolts with nut ands the washer temporarily.

③ Fasten the filter chamber for rear suction to the indoor unit tightly.

④ Fix the filter chamber for rear suction to the suspension bolts tightly.

⑤ Install the screening door to the bottom of the indoor unit with screws.

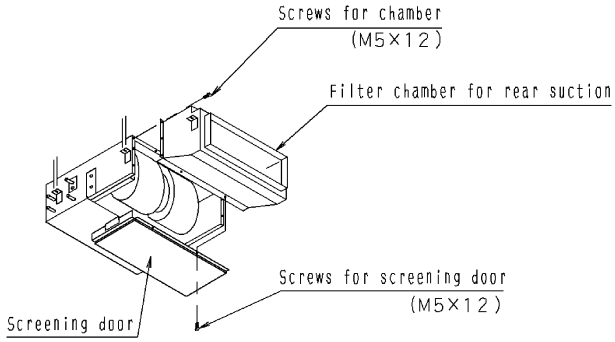

When the long-life filter is used

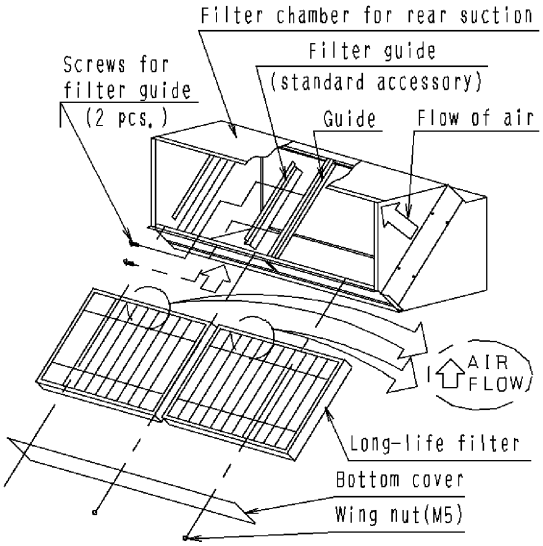

(Procedure)(When the maintenance of the filter is carried out from the bottom.)

(The long-life filter of standard accessory shall be used.)

(1) Remove the bottom cover.

(2) Install the filter guide with 2 screws to the center of the guide of the filter chamber.
(Only for 80 and 160 model)

(3) Install the long-life filter to the rail of the leeward.

(Caution)
Match the arrow mark of the long-life filter to the flow of the air.

(4) Install the bottom cover.

3K016914

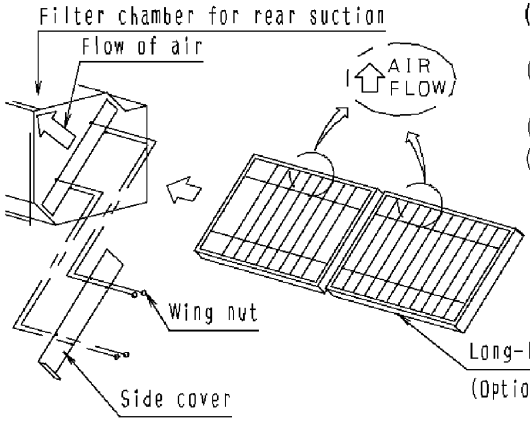

(Procedure) (When the maintenance of the filter is carried out from the side.)
(Refer to the following table for the type of the long-life filter.)
(1) Remove the side cover.
(2) Install the long-life filter to the rail of the guide of the leeward.
(Caution)
Match the arrow mark of the long-life filter to the flow of the air.
(3) Install the side cover.

Kit name	KAJ25L36B	KAJ25LA56B	KAJ25LA80B	KAJ25LA160B
Long-life filter	Long-life filter of standard accessories shall be used.		KAFJ259L80	KAFJ259L160

When the high efficiency filter (optional kit)is used

Kit name		KAJ25L36B	KAJ25LA56B	KAJ25LA80B	KAJ25LA160B
High efficiency filter kit	65%	KAFJ252L36	KAF252LA56	KAF252LA80	KAF252LA160
	90%	KAFJ253L36	KAF253LA56	KAF253LA80	KAF253LA160

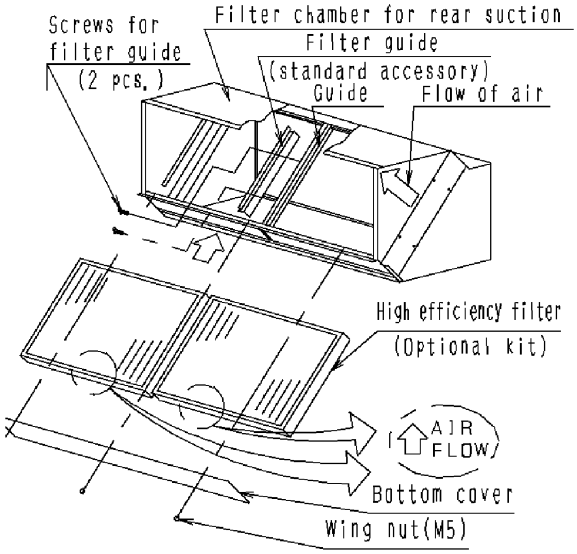

(Procedure)
(When the maintenance of the filter is carried out from the bottom.)
(1) Remove the bottom cover.
(2) Install the filter guide with 2 screws to the center of the guide of the filter chamber.
(Only for 80 snd 160 model)
(3) Install the high efficiency filter to the rail of the windward.
(Caution) Match the arrow mark of the high efficiency filter to the flow of the air.
(4) Install the bottom cover.

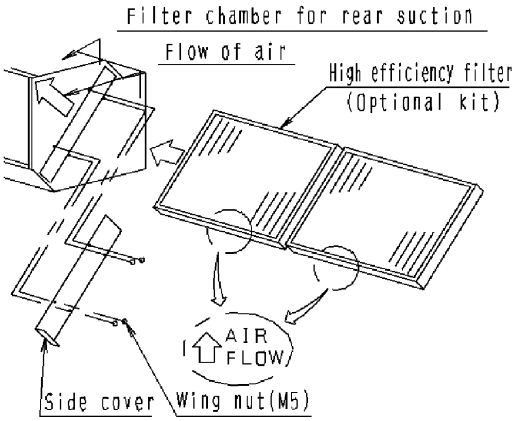

(Procedure)
(When the maintenance of the filter is carried out from the side.)
(Refer to the following table for the type of long-life filter.)
(1) Remove the side cover.
(2) Install the high efficiency filter to the rail of the guide of the windward.
(Caution) Match the arrow mark of the high efficiency filter to the flow of the air.
(3) Install the side cover.

3K016914

9.8 KAFJ251K36 / 56 / 80 / 160 — Replacement Long-Life Filter

KAFJ251K80

Caution

• Can be water-washed. Can be reused.

Dimensions Unit (mm)

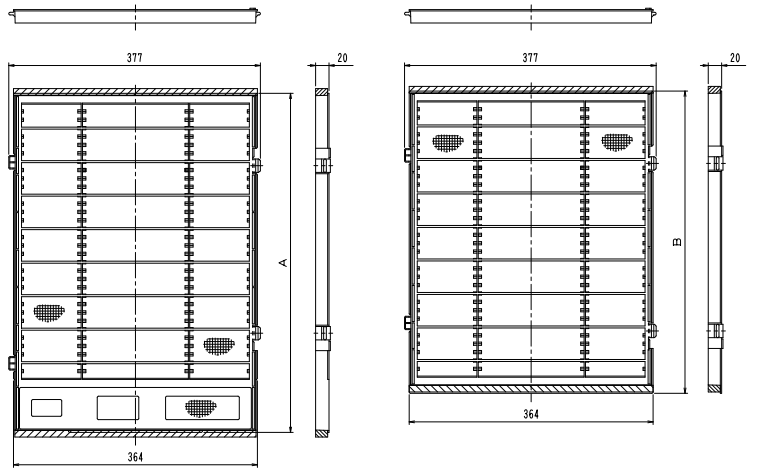

Model	A
KAFJ251K36/80	506
KAFJ251K56/160	656

Model	B
KAFJ251K80	451
KAFJ251K160	701

JC: D3K1147B
JC: D3K1148C

Specifications

Item	Model	KAFJ251K36	KAFJ251K56	KAFJ251K80	KAFJ251K160
Average Efficiency	%	50% (Gravity method)			
Initial Pressure Loss	Pa	10			
Final Pressure Loss	Pa	49			
Materials		Mildew Proof Resin Net			
Air flow rate	m^3/min	9.5	17.5	18	38
	l/sec	158	292	300	633
Number Required per Model		1	1	2 (each 1)	2 (each 1)
Life Time	h	2,500 hours (dust particle concentration at 0.15 mg/m³)			
Mass	kg	0.4	0.5	0.8	1.0

Characteristics of filter

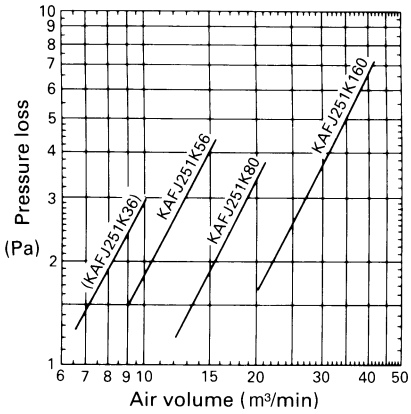

9.9 KSA-25K36, KSA-25KA56 / 80 / 160 — Canvas Duct (Air Suction Canvas)

KSA-25KA80

Dimensions Unit (mm)

Model	A	B	C	D
KSA-25K36	550	514	125	225
KSA-25KA56	700	664	200	300
KSA-25KA80	1,000	964	350	450
KSA-25KA160	1,400	1,364	550	650

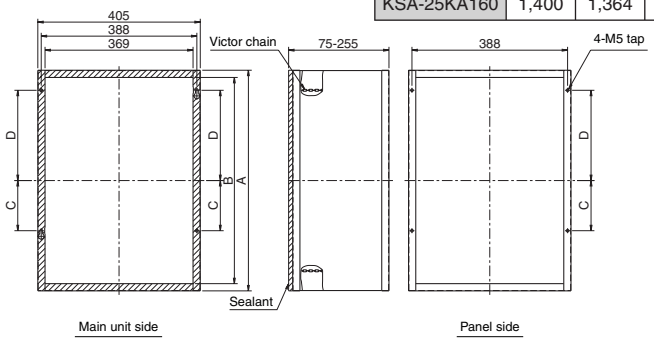

JC: D3K2753A

- Can be attached so that there is no gap in the ceiling using the included turn buckle.

Item / Model		KSA-25K36	KSA-25KA56	KSA-25KA80	KSA-25KA160
Canvas duct		Flame retardant			
Mass	kg	1.8	2.2	2.8	3.6
Component parts		Air suction canvas. Turn buckle. Mounting screw. Adjustment plate. Installation manual.			
Decoration panel		BYBS32DJW1	BYBS45DJW1	BYBS71DJW1	BYBS125DJW1

Installation Manual

1. This kit contains the following parts and accessories.

Name	Quantity			
	KSA-25K36	KSA-25K56 KSA-25KA56	KSA-25K80 KSA-25KA80	KSA-25K160 KSA-25KA160
Air suction canvas	1	1	1	1
Turnbuckle	4	4	4	4
Screws for air suction canvas	4	4	4	4
Adjuster plate	4	4	4	4
Screws for adjuster plate	4	4	4	4
Installation manual	1	1	1	1

2. Require tools

Screwdriver ⊕, Nippers

3. Operation procedures

(1) Install the air suction canvas

① Tighten two screws for air suction canvas to the indoor unit. (Leave about 30mm of thread exposed.)

② Fit the air suction canvas over the screws and slide the direction of the arrow in Fig2. to hang the air suction canvas on the indoor unit.

③ Fit the remaining two screws and tighten all four screws until the seal is about 5mm thick.

(2) Adjust the air suction canvas

① Attach the suction panel. For details, see the installation manual provided with the suction panel.

[To use the turnbuckle]

- The canvas duct can be adjusted in the 115~255mm range. [See Fig. 4]

a. Attach the turnbuckles to the canvas duct and hook the turnbuckles to the chain at a point that closes the gap between the ceiling surface and the suction panel. (Fig. 4)(Before attaching the turnbuckles, lengthen the screws. Attach them with the groove facing upwards.)[Fig. 3]

b. Turn the turnbuckles clockwise until the gap between the ceiling surface and the suction panel closes tightly. Cut any extra chain with the nippers.

[To use the adjuster plate](Only for the decoration panel)

- The canvas duct can be adjusted in the 75~115mm range. [See Fig. 7]
- The adjuster plate cannot be used with electric precipitator or high efficiency filters.

a. Remove the chain and put the four screws back in the same holes. Tighten also the four screws for adjuster plate to the indoor unit. [Fig. 5]

b. Hook one adjuster plate on each of the 4 sets of screws tightened in step a. [Fig. 6](Orient the adjuster plater as shown in Fig. 7.)

c. Slightly raise the decoration panel and turn the adjuster plate until the gap between ceiling surface and the decoration panel closes. Make sure the cut-out on each of the adjuster plates locks onto the bottom screw. [Fig. 7]

d. Tighten all screws definitively.

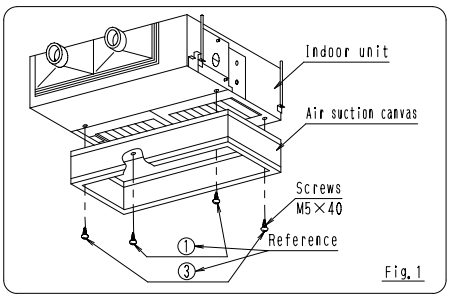

Fig. 1

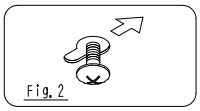
Fig. 2

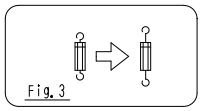
Fig. 3

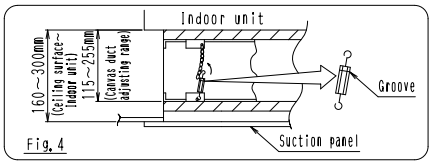

Fig. 4

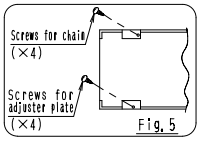

Fig. 5

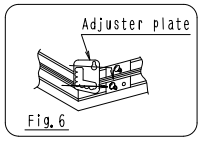

Fig. 6

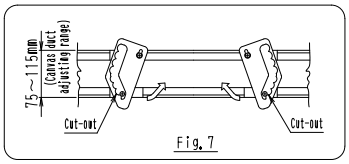

Fig. 7

3K07978A

9.10 KBBJ25K36, KBBJ25KA56 / 80 / 160 — Screening Door

KBBJ25K36

• Screens the bottom intake vent.

Dimensions Unit (mm)

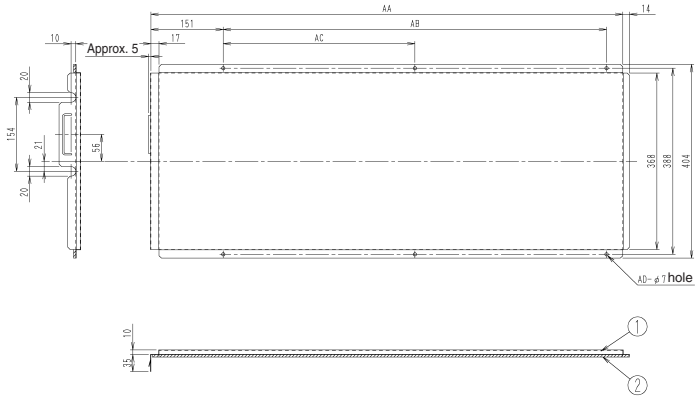

Model	AA	AB	AC	AD
KBBJ25K36	535	350	–	4
KBBJ25KA56	685	500	–	4
KBBJ25KA80	985	800	400	6
KBBJ25KA160	1385	1200	800	6

JC: D3K1156C

Example of installation

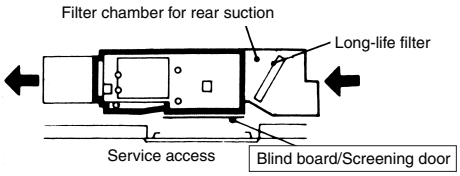

Item / Model		KBBJ25K36	KBBJ25KA56	KBBJ25KA80	KBBJ25KA160
Appearance		Galvanized steel plate			
Mass	kg	1.8	2.2	3.2	4.4
Component parts		Blind board/Screening door. Screws. Installation manual.			

Installation Manual

1. This kit contains the following parts and accessories

Name	Quantity			
	KBBJ25K36	KBBJ25K56	KBBJ25K80	KBBJ25K160
	KBB25B32	KBBJ25KA56	KBBJ25KA80	KBBJ25KA160
		KBB25B45	KBB25B63	KBB25B125
Screenig door	1	1	1	1
Screws	4	4	6	6
Installation manual	1	1	1	1

2. Required tools

Screwdriver ⊕

3. Operating procedures

1. Remove the long-life filters of standard accessory from indoor unit.
2. Attach the screening door to the indoor unit.

4. Cautions for the installation

○ Install the screening door as explain in these instructions.
○ Fasten the screws tightly so as no gap between the indoor unit and the screening door.

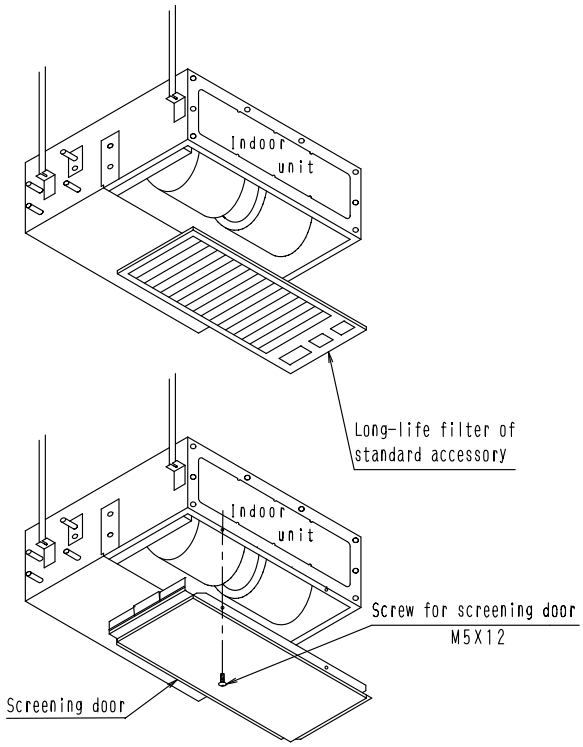

3P011904A

9.11 KDJ2507K36 / 56 / 80 / 160 — Air Suction Flange

KDJ2507K80

Dimensions Unit (mm)

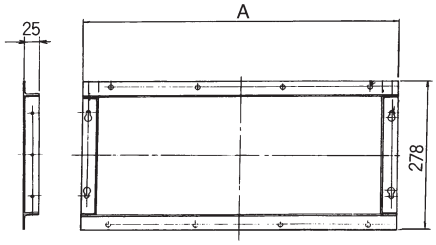

Model	A
KDJ2507K36	527
KDJ2507K56	677
KDJ2507K80	977
KDJ2507K160	1,377

C: D3K1157

Example of installation

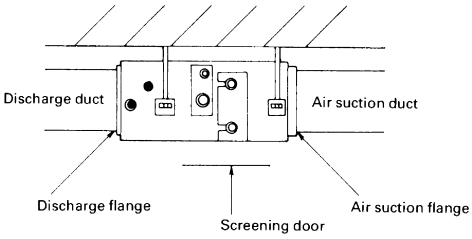

Item			Model KDJ2507K36	KDJ2507K56	KDJ2507K80	KDJ2507K160
Size of connecting duct	Width	mm	477	627	927	1327
	Length	mm	228			
Materials			Galvanized steel plate			
Component parts			Flange for suction. Packing. Screws. Installation Manual.			

Note: When connecting a square duct to the intake side, the screening door (KBBJ25K36, KBBJ25KA56/80/160) of optional kit is needed.

Installation Manual

1. This kit contains the following parts and accessories.

Name	Quantity			
	KDJ2507K36	KDJ2507K56	KDJ2507K80	KDJ2507K160
	KD2507B32	KD2507B45	KD2507B63	KD2507B125
Air suction flange	1	1	1	1
Screws	12	14	18	24
Installation manual	1	1	1	1

(Caution)This kit requires the screening door.(option)

2. Required tools

Screwdriver⊕, Nippers, Drill(φ6mm), Cutter knife

3. Operating procedures

a. Remove the long-life filter from the indoor unit.(Fig.1)
b. Remove the rear panel assembly.(Fig.1)
c. Drill φ6 holes in the rear panel around the knock-out hole recess and knock out hole.
d. Cut the sound-proofing to the rear panel size and shape with a cutter knife. (fig.2)
e. Attach the rear panel to the air conditioner.(Fig.3)
f. Attach the screening door to the indoor unit.(Fig.3)
①Tighten two installation screws to the indoor unit. (Leave about 5mm of thread exposed.)
②Hang the air suction flange on the screws and then tighten all screws definitively.

4. Cautions for the installation

a. Install the flange for the suction as explain in these instructions.
b. Fasten the screws tightly so as no gap between the indoor unit and the air suction flange(have a packing).

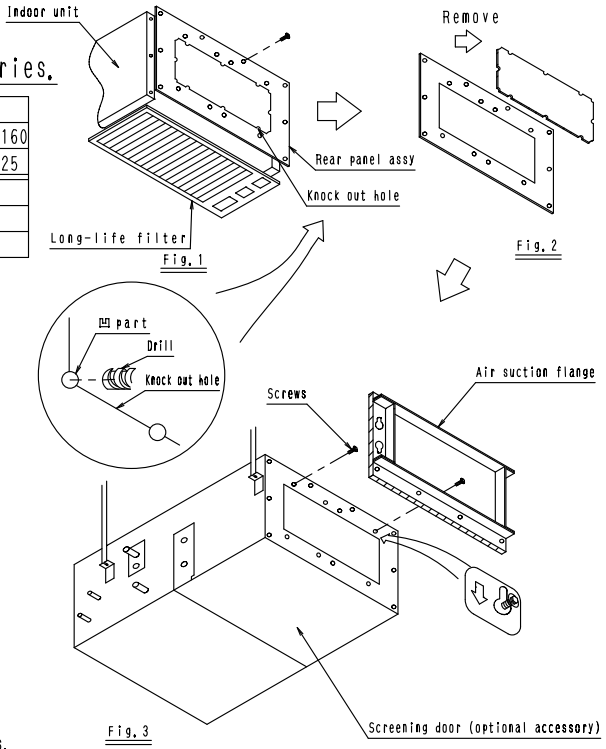

3P011745

9.12 KDAJ25K36 / 56 / 71 / 140A — Air Discharge Adaptor

KDAJ25K56A

Item \ Model		KDAJ25K36A	KDAJ25K56A	KDAJ25K71A	KDAJ25K140A
Duct connection diameter		ϕ200×1 port	ϕ200×2 port		ϕ200×4 port
Material		Hot-dip zinc coated steel sheets. EPS. Insulation.			
Accessories		Screws. Installation manual.			
Mass	kg	1.0	1.5	2.5	3.5

Dimensions Unit (mm)

KDAJ25K36A

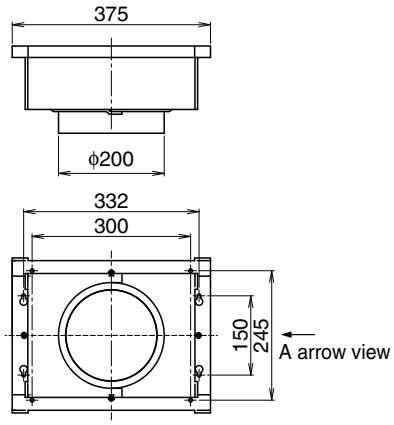

D3K06518

KDAJ25K56A

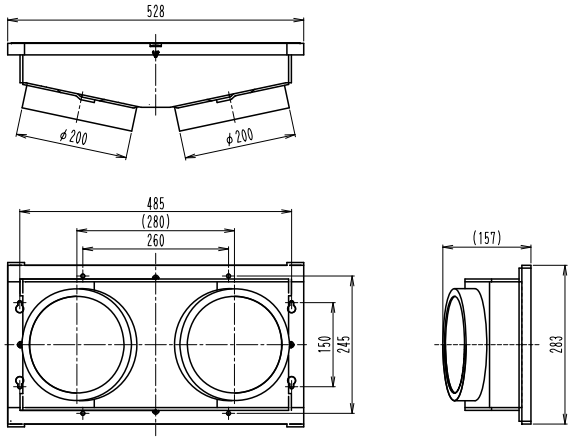

D3K06136

KDAJ25K71A

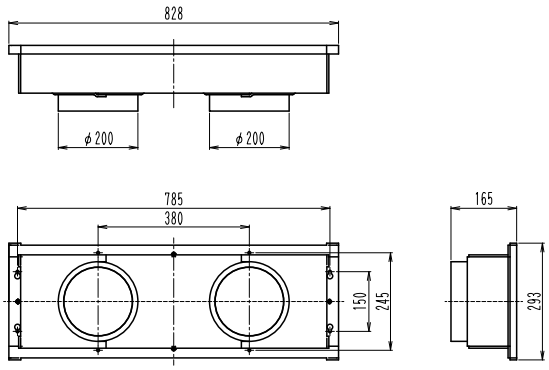

D3K06137

KDAJ25K140A

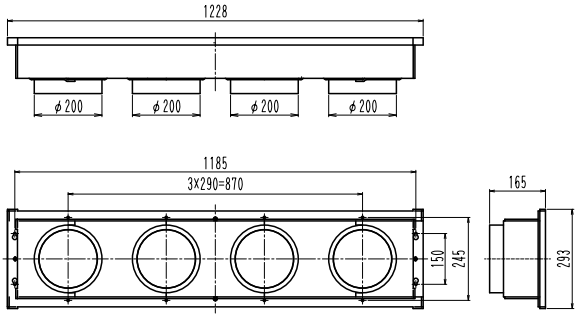

D3K06138A

Example of installation (FBQ-D(A) / FXMQ-P)

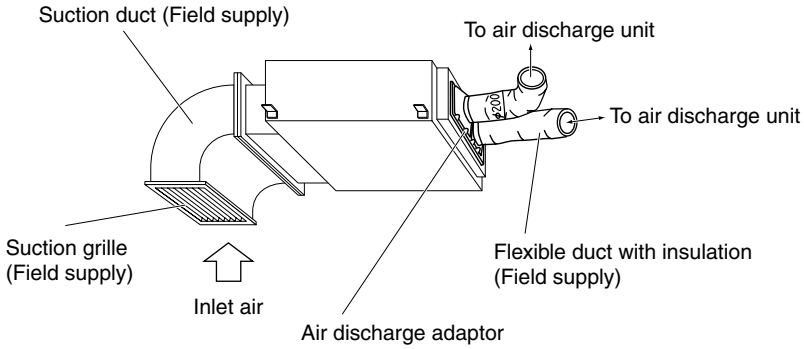

Example of installation (FBQ-B / FH(Y)B / FXS(YQ) / FXYB)

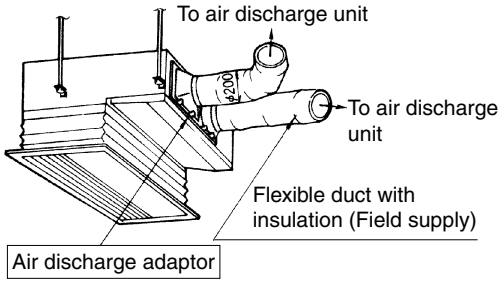

Installation Manual

Air discharge adapter installation manual

1. This kit contains the following parts and accessories.

Name	Quantity			
	KDAJ25K36A	KDAJ25K56A	KDAJ25K71A	KDAJ25K140A
	KDA25D32	KDA25D45	KDA25D63	KDA25D125
Air discharge adapter	1	1	1	1
Installation manual	1	1	1	1
Screws	8	8	8	12

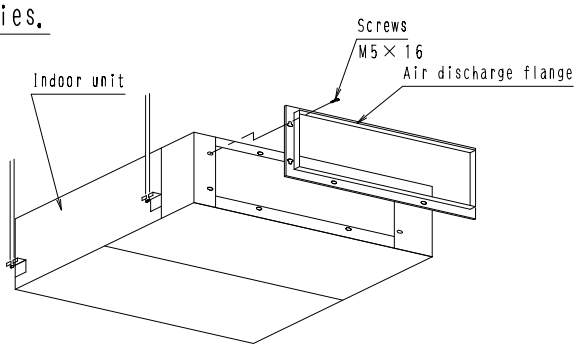

2. Required tools

Screwdriver ⊕

3. Operating procedures

1. Remove the air discharge flange from indoor unit.
2. Attach the air discharge adapter to the indoor unit.
   ① Tighten two installation screws to the indoor unit. (Leave about 20mm of the thread exposed.)
   ② Hang the air discharge adapter on the screws and then tighten all screws definitively.

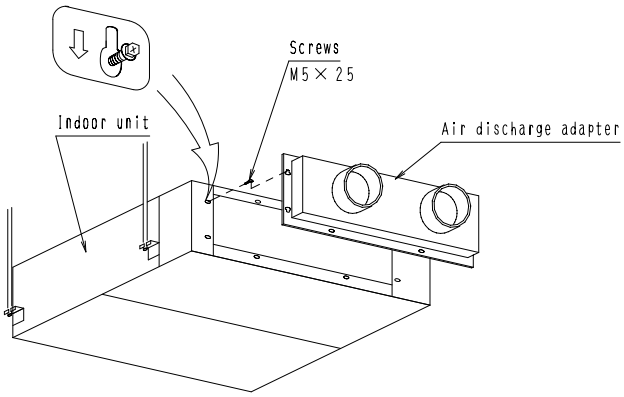

4. Cautions for the installation

Fasten the screws tightly so as no gap between the indoor unit and the air discharge adapter.

3P012475C

10. FXM(Q) — Ceiling Mounted Duct Type, Outdoor Air-Processing Unit

10.1 KAF372AA36 / 56 / 80 / 160, KAF373AA36 / 56 / 80 / 160 — High Efficiency Filter

KAF372AA56

Item \ Model		KAF372AA36	KAF373AA36	KAF372AA56	KAF373AA56
Initial pressure loss	Pa	15 or less	21 or less	35 or less	54 or less
Final pressure loss	Pa	98 or less			
Average efficiency (colorimetric method)	%	65	90	65	90
Air flow rate / 1 sheet	m^3/min	9.8			
Life *1	h	2,500	1,800	2,500	1,800
Filter element		Non-woven fabric of synthetic fiber			
Number of sheets included		1	1	2	2
Mass (Weight)	kg	1.0	1.0	1.0	1.0

Item \ Model		KAF372AA80	KAF373AA80	KAF372AA160	KAF373AA160
Initial pressure loss	Pa	35 or less	54 or less	38 or less	56 or less
Final pressure loss	Pa	98 or less			
Average efficiency (colorimetric method)	%	65	90	65	90
Air flow rate / 1 sheet	m^3/min	9.8			
Life *1	h	2,500	1,800	2,500	1,800
Filter element		Non-woven fabric of synthetic fiber			
Number of sheets included		3	3	4	4
Mass (Weight)	kg	1.5	1.5	2.0	2.0

Note:
*1. Dust concentration 0.15 mg/m^3

Caution
- Cannot be water-washed for reuse.
- The filter chamber (for high efficiency filter) (KDDF37AA36 / KDDF37AA56 / KDDF37AA80 / KDDF37AA160) is required when the high efficiency filter will be installed.

Dimensions Unit (mm)

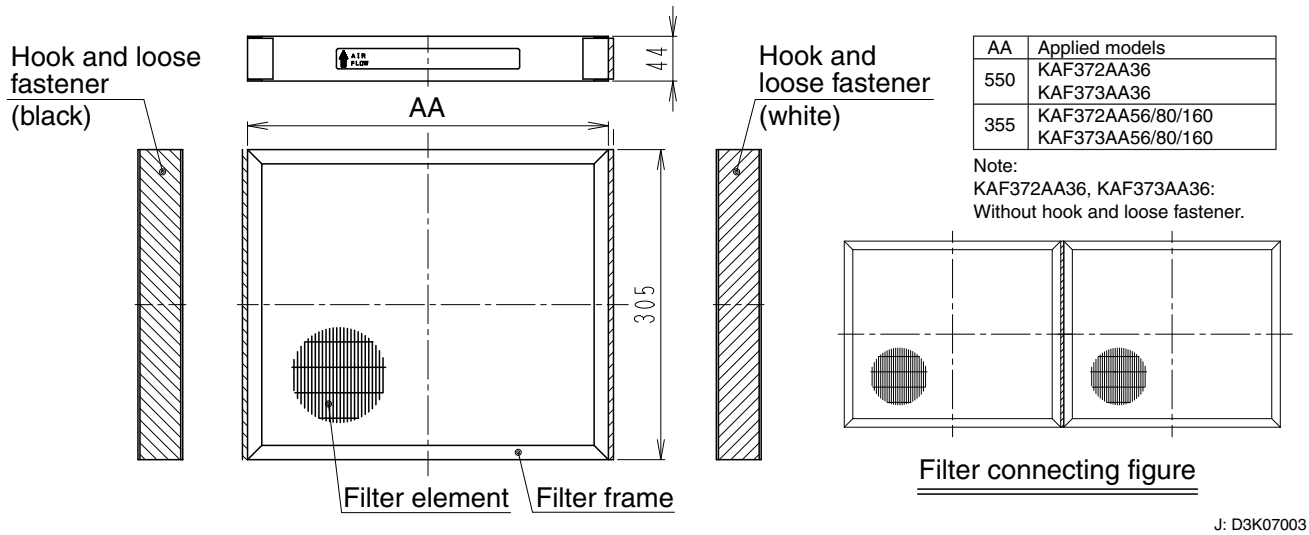

AA	Applied models
550	KAF372AA36 KAF373AA36
355	KAF372AA56/80/160 KAF373AA56/80/160

Note:
KAF372AA36, KAF373AA36:
Without hook and loose fastener.

J: D3K07003
J: D3K06645

10.2 KAFP372A80 / 160, KAFJ372L140 / 280, KAFP373A80 / 160, KAFJ373L140 / 280 — High-Efficiency Filter

KAFP372A80

Caution

- Cannot be water-washed for reuse.
- The filter chamber (for high efficiency filter) (KDDFP37A80/160) is required when the high-efficiency filter will be installed.

Dimensions Unit (mm)
KAFP372A80/160, KAFP373A80/160

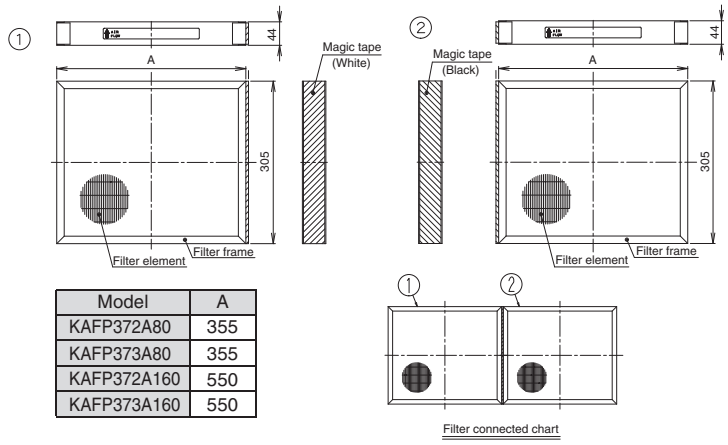

Model	A
KAFP372A80	355
KAFP373A80	355
KAFP372A160	550
KAFP373A160	550

JC: D3K04908A

KAFJ372L280

Caution

- Cannot be water-washed for reuse.
- The filter chamber (for high-efficiency filter) (KDJ3705L140/280) is required when the high-efficiency filter will be installed.

Dimensions Unit (mm)
KAFJ372L280/KAFJ373L280

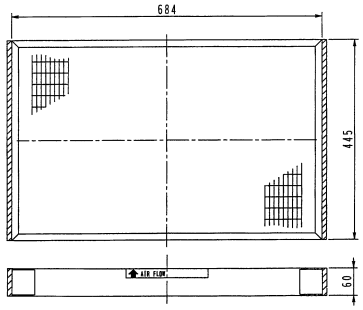

JC: D3K2289
JC: D3K2290

Specification

Model		65% type							90% type						
Items		KAFP372A80		KAFP372A160		KAFJ372L140		KAFJ372L280	KAFP373A80		KAFP373A160		KAFJ373L140		KAFJ373L280
Filter chamber		KDDFP37A80		KDDFP37A160		KDJ3705L140		KDJ3705L280	KDDFP37A80		KDDFP37A160		KDJ3705L140		KDJ3705L280
Dimension (W×D×T)	mm	355×305×44		550×305×44		684×445×60			355×305×44		550×305×44		684×445×60		
Average efficiency (Colorimetric method)	%	65							90						
Initial pressure loss	Pa	18	35	26	38	39	27	42	28	54	36	56	39	29	45
Final pressure loss	Pa	98							98						
Filter element		Non-woven fabric of synthetic fiber							Non-woven fabric of synthetic fiber						
Life	h	2500 (dust density 0.15mg/m³)							1800 (dust density 0.15mg/m³)						
Number of sheets included		2		2		1	2		2		2		1	2	
Mass	kg	1.1		2.0		1.0	2.0		1.1		2.0		1.0	2.0	

Characteristics of filter

■KAFP372A80/KAFP372A160, KAFP373A80/KAFP373A160

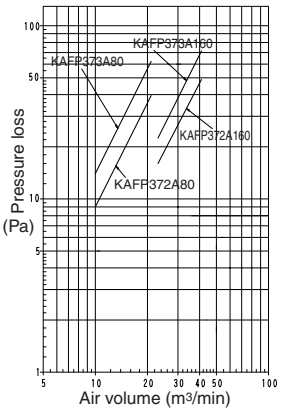

■KAFJ372L280/KAFJ373L280

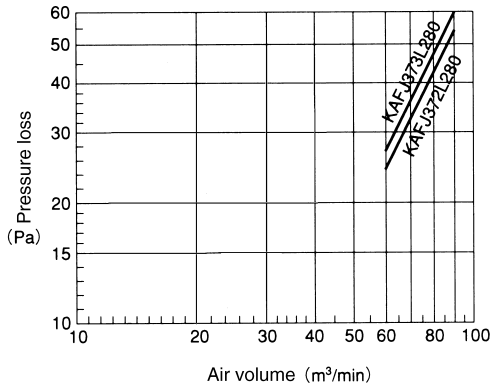

Installation

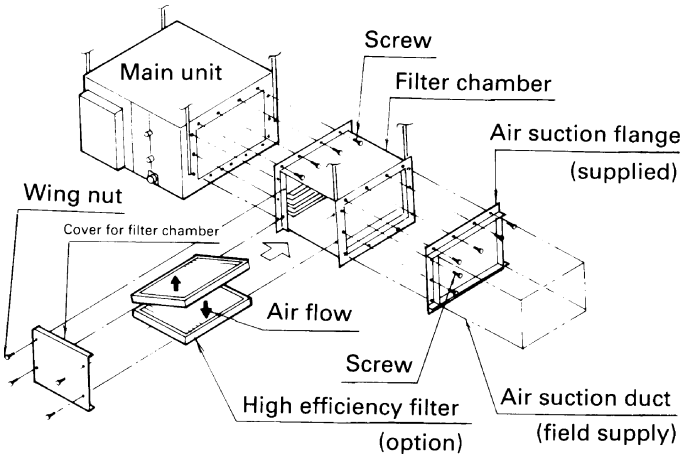

- Meet the airflow direction and arrow mark putting on the High efficiency filter.
- It is impossible to be built in with the air cleaning unit together.

10.3 KDDF37AA36 / 56 / 80 / 160 — High Efficiency Filter Chamber

Item			Model	KDDF37AA36	KDDF37AA56	KDDF37AA80	KDDF37AA160
Inserted filter	High efficiency filter	65% (colorimetric method)		KAF372AA36	KAF372AA56	KAF372AA80	KAF372AA160
		90% (colorimetric method)		KAF373AA36	KAF373AA56	KAF373AA80	KAF373AA160
	Long-life filter			KAF371AA36	KAF371AA56	KAF371AA80	KAF371AA160
Accessories				Mounting screws. Installation manual.			
Mass			kg	4.5	6	7	9

Dimensions Unit (mm)

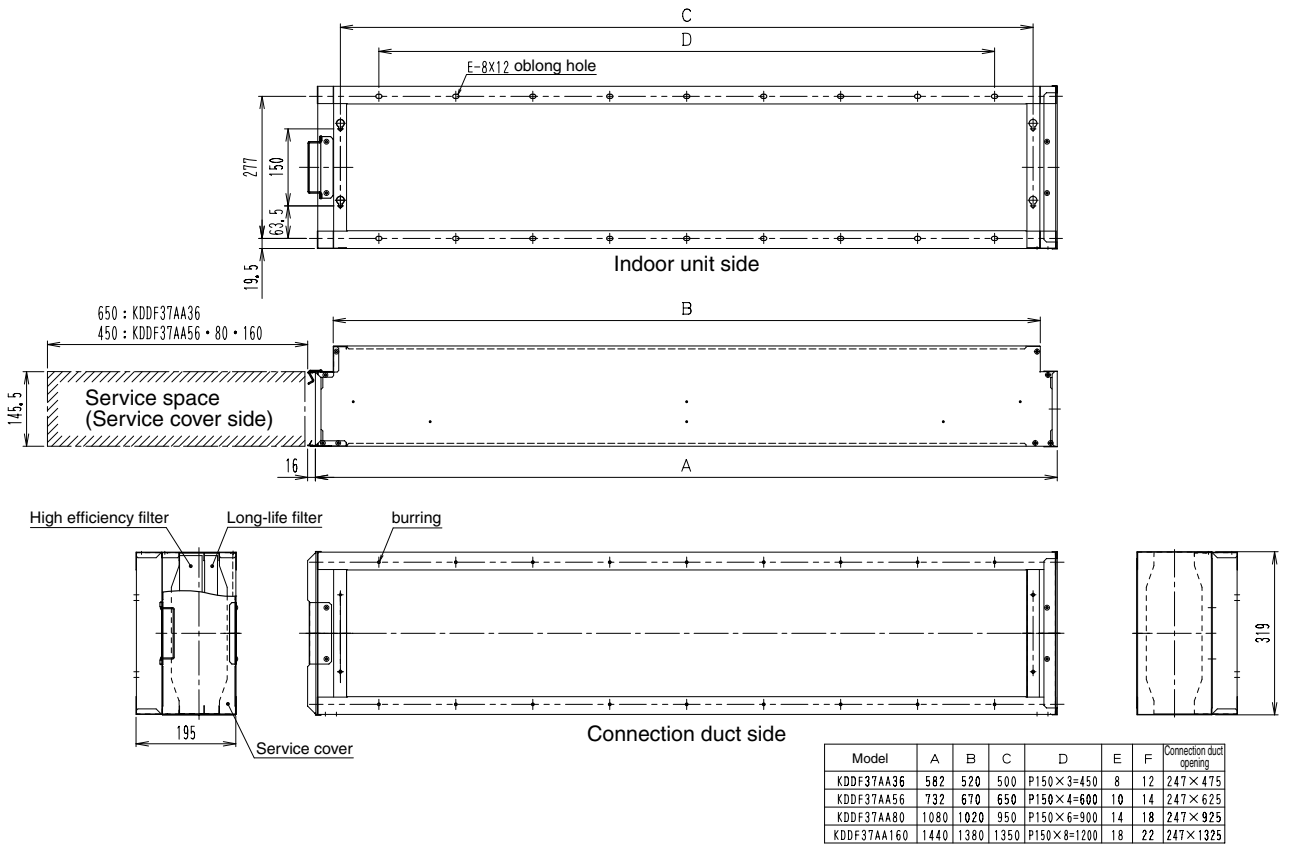

Model	A	B	C	D	E	F	Connection duct opening
KDDF37AA36	582	520	500	P150×3=450	8	12	247×475
KDDF37AA56	732	670	650	P150×4=600	10	14	247×625
KDDF37AA80	1080	1020	950	P150×6=900	14	18	247×925
KDDF37AA160	1440	1380	1350	P150×8=1200	18	22	247×1325

JC: D3K06642C

Installation Manual

DAIKIN AIR CONDITIONERS Filter Chamber《Ceiling Mounted Duct Connection Type》Installation Manual

KDDF37AA36 • 56 • 80 • 160

Read this manual in advance and follow all the instructions given in the manual to conduct the installation of the product

⚠Precautions

Conduct the installation of the product correctly after carefully reading the safety precautions specified below.

- Request your dealer or contractor to conduct the installation of the product. Users' unauthorized installation work may result in the falling of the product or air leakage.
- Conduct the installation of the product correctly by following all the instructions given in the manual. A defect in the installation work may result in the falling of the product or air leakage.
- Be sure to use parts specified in this manual and the accessories provided with the product for the installation of the product. Failure to use these parts may result in the falling of the product or air leakage.
- Conduct the trial operation of the product after the installation of the product and check that there are no abnormalities.

Precautions

- This product can be mounted to air conditioners of ceiling mounted duct connection type.
- Mount the product after checking the model name of the indoor unit with the table on the right-hand side.
- Refer to the operation manual and installation manual for the indoor unit as well at the time of the installation of the product.
- In the case of using the product for a ceiling return application, (Except KAF375AA36) prepare a protection net (KPN37A56, KPN37A 80, or KPN37A 160) as an optional accessory.
- Use of long-life filters
  Long-life filters can be washed and used again. On completion of installation, advise the customer of the cleaning interval and removal method of the filters by using the operation manual for the indoor unit and this installation manual.
- Use of high-performance filters
  High-performance filters cannot be washed in water for reuse. On completion of installation, advise the customer of the cleaning interval of the filters by using the operation manual for the indoor unit.

Parts

Make sure that the following parts are provided with the product.

Name		Filter chamber	Mounting screw	Installation Manual
Shape			M5×16	
Number	KDDF37AA36	1	12	1 (This copy)
	KDDF37AA56		14	
	KDDF37AA80		18	
	KDDF37AA160		22	

Combination table

The use of the chamber requires each filter as an optional accessory.

Name of model	High-performance filter (optional accessory)	Long-life filter (optional accessory)	Name of model incorporable into indoor unit	
KDDF37AA36	KAF372AA36 or KAF373AA36	KAF371AA36	VRV	FXMQ20 / 25 / 32PVE
KDDF37AA56	KAF372AA56 or KAF373AA56	KAF371AA56	VRV	FXMQ40PVE
KDDF37AA80	KAF372AA80 or KAF373AA80	KAF371AA80	SkyAir	FBQ71DV1 FBQ71DAVET
			VRV	FXMQ50/63/80PVE
KDDF37AA160	KAF372AA160 or KAF373AA160	KAF371AA160	SkyAir	FBQ100/125/140DV1 FBQ100/125/140DAVET FBQ30/36/42/48DV2S
			VRV	FXMQ100/125/140PVE

KAF372AA36, KAF372AA56, KAF372AA80, and KAF372AA160: 65% (colorimeter method)
KAF373AA36, KAF373AA56, KAF373AA80, and KAF373AA160: 90% (colorimeter method)

❶ Before installation 《Do not throw away the required accessories until the installation of the product is completed.》

(1)Decide the carry-in route.。
(2)Carry the product into the place of installation without unpacking the product. If it is unavoidable to unpack and carry in the product, pay the utmost attention to handle the product.

❷ Selecting Place of Installation 《Refer to the installation manual provided to the indoor unit as well.》

(1) Select the place of installation with the consent of the customer, provided that the following conditions are satisfied.
- A place bearing the weight of the indoor unit and filter chamber.
- A place where the lower part of the ceiling does not lean remarkably.
- A place where an installation workspace can be secured.

(2) Either the left- or right-hand side service cover can be used to remove the filters. Select the direction of removal according to the condition of installation. (The service cover in position Ⓐ is set for opening and closing before shipping.) At that time, confirm the up-and-down direction of the filter chamber through the snap holes located on the left- and right-hand sides of the frame on the air onditioner connection side.

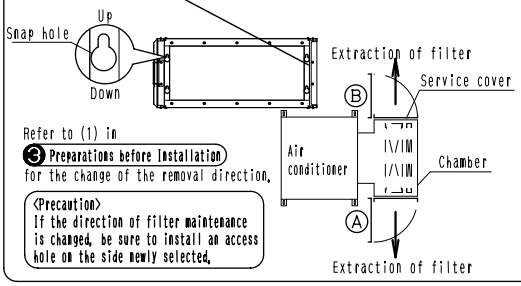

Refer to (1) in ❸ Preparations before Installation for the change of the removal direction.

<Precaution>
If the direction of filter maintenance is changed, be sure to install an access hole on the side newly selected.

(3) Install the access hole for the filter service space as shown below.
- Refer to the installation manual for the indoor unit and provide a service space for the indoor unit.

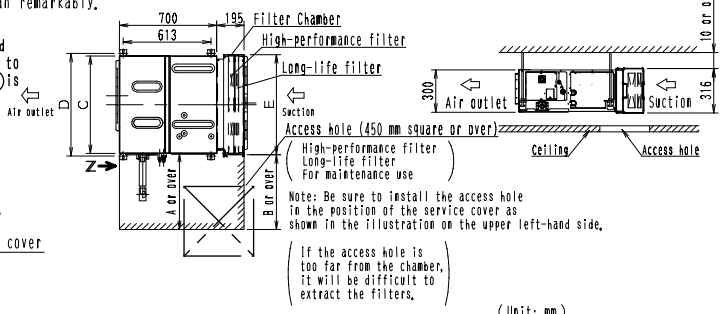

Note: Be sure to install the access hole in the position of the service cover as shown in the illustration on the upper left-hand side.

If the access hole is too far from the chamber, it will be difficult to extract the filters.

(Unit: mm)

Unit name	A	B	C	D	E
KDDF37AA36	650	650	550	588	582
KDDF37AA56	450	450	700	738	720
KDDF37AA80	450	450	1000	1038	1080
KDDF37AA160	450	450	1400	1438	1440

❸ Preparations before Installation Refer to the installation manual provided to the indoor unit as well.

(1) Take the following procedure in the case of changing the direction of filter extraction.
Example: When changing the opening and closing direction of the service cover from Ⓐ to Ⓑ as shown in ❷ Selecting Place of Installation -(2)

1. Remove the fixing buckle for the service cover. (Fig. 1)
2. Rotate the service cover until the service cover is released from the tabs of the temporary latches. (Fig. 2)
3. Remove the fixing buckle for the service cover, temporary latches, and the screws on the side plates.
4. Mount the parts with the screws removed in step 3 to the opposite side. (Fig. 4)
   Insert the protruding seal material on the side plate into the rail side of the long-life filters.
5. Mount the service cover in the order opposite to that in step 2, and fix the cover with the fixing buckle.

<Precaution>
Check that the fixing buckle securely locks the service cover. Otherwise, air leakage may result.

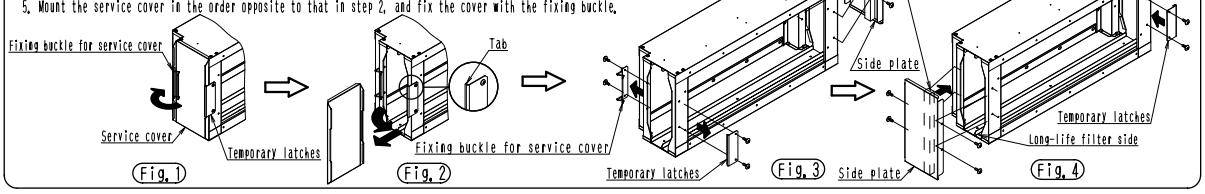

C: 3K021007

(2) Remove the air inlet flange of the indoor unit. (Fig. 5)
(3) In the case of connecting on-site ducts to the air outlet of the indoor unit and the air inlet of the filter chamber, mount a canvas duct (locally procured) to the air inlet flange so that the vibration of the filter chamber will not be propagated to the ducts or ceiling. (Fig. 6)
- Install the connected ducts with suspension bolts (locally procured) so that the weight of the connected ducts will not be imposed on the air inlet flange.
- Moreover, apply an adsorption material (thermal insulator) to the inner wall of the on-site duct and attach vibration isolation rubber to the suspension bolts for the indoor unit.
- In the case of connecting the local duct to the air inlet side of the filter chamber, mount the dismounted air inlet flange to the air inlet side of the filter chamber with the screws removed from the indoor unit and those provided to the indoor unit.

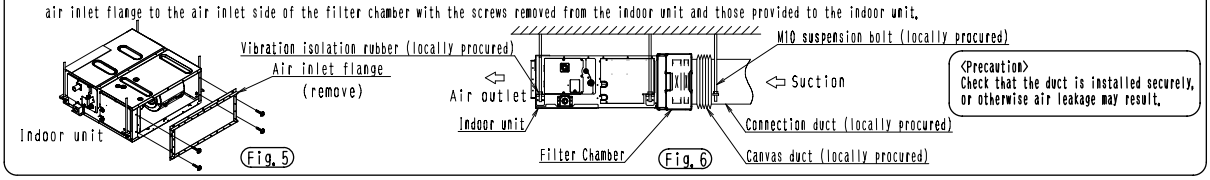

4 Installation of Filter Chamber

The filter chamber mounted to the indoor unit can be hung on the suspension bolts.
(1) Temporarily tighten the mounting screws provided with the product to the 4 points of the indoor unit. (Fig. 5)
Tap threads on the screws on the indoor unit in advance to secure the filter chamber.
(2) Temporarily secure the chamber with the screws prepared in (1) through the snap holes from the inner side of the chamber.
(3) Tighten the 4 temporarily secured screws after tightening the provided mounting screws (8 screws for type 36, 10 screws for type 56, 14 screws for type 80 (fig. 8), and 18 screws for type 160) in all the screw holes in the chamber.
(4) Use an appropriate tool, such as a spirit level, and install the indoor unit and filter chamber horizontally.

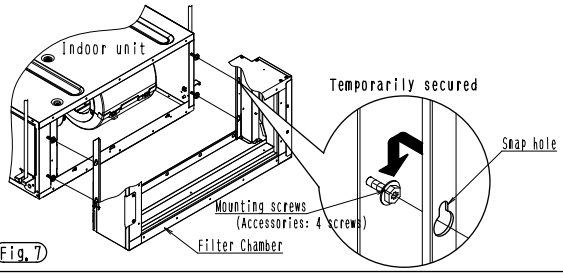

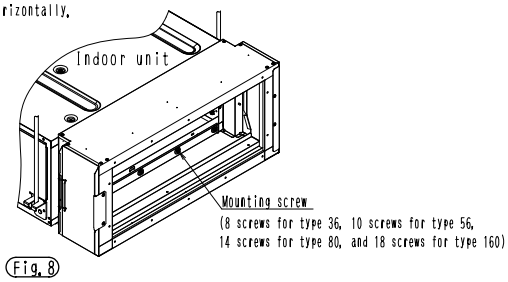

5 Filter Mounting Procedure

High-performance filter

There is no difference in mounting method between the 65% type and 90% type.
(1) Refer to (1) in ❸ Preparations before Installation and remove the service cover. Remove the fixing buckle for the service cover and rotate the service cover until the service cover is released from the tabs of the temporary latches.
(2) Insert the first sheet (provided with black magic tape) according to the wide filter rail with the filter label faced downward while checking that the airflow direction is in conformity with the direction of the arrows.
(3) After the first filter is perfectly inserted, insert the next filter (on the white magic tape side as shown in the illustration on the right-hand side) and secure the filter with the magic tape.
(4) After inserting the filter all the way into the filter chamber, mount the service cover in the order opposite to that in (1). (Number of filters: 1 for type 36, 2 for type 56, 3 for type 80, and 4 for type 160)

<Precaution>
Check that the fixing buckle securely locks the service cover.
Otherwise, air leakage may result.

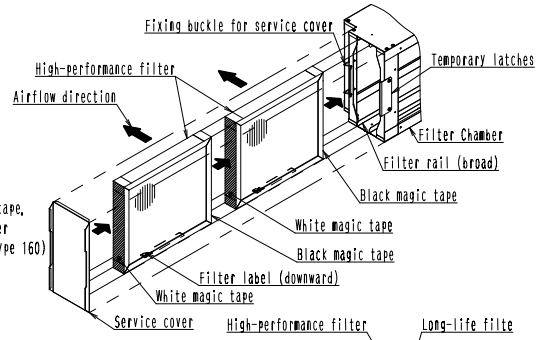

Long-life filter

(1) Refer to (1) in ❸ Preparations before Installation and remove the service cover. Remove the fixing buckle for the service cover and rotate the service cover until the service cover is released from the tabs of the temporary latches.
(2) Insert the filter according to the filter rail with the filter label faced downward while checking that the airflow direction is in conformity with the directions of the arrows.
(3) Be sure to hook the next filter to the tab on the first filter and insert the next filter when more than half the first filter is inserted.
The filter cannot be inserted unless the direction of the filter is correct. (Except KAF375AA36) (Fig. 9)
(4) After inserting the filter all the way into the filter chamber, mount the service cover in the order opposite to that in (1)
(Number of filters: 1 for type 36, 2 for type 56, 3 for type 80, and 4 for type 160)

<Precaution>
Check that the fixing buckle securely locks the service cover.
Otherwise, air leakage may result.

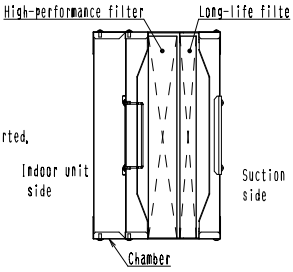

Position of Each Filter in Chamber Side View
(Before mounting service cover)

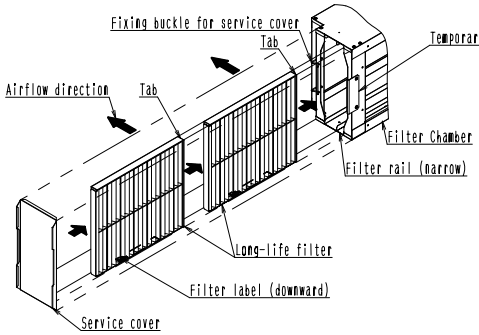

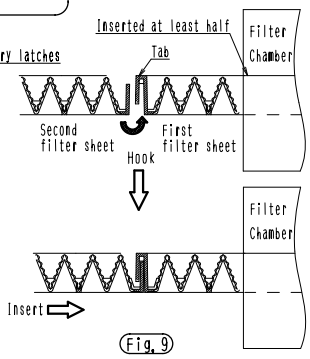

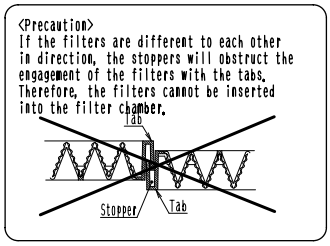

3K021007

10.4 KDDFP37A80 / 160 — Filter Chamber

KDDFP37A80

Dimensions Unit (mm)

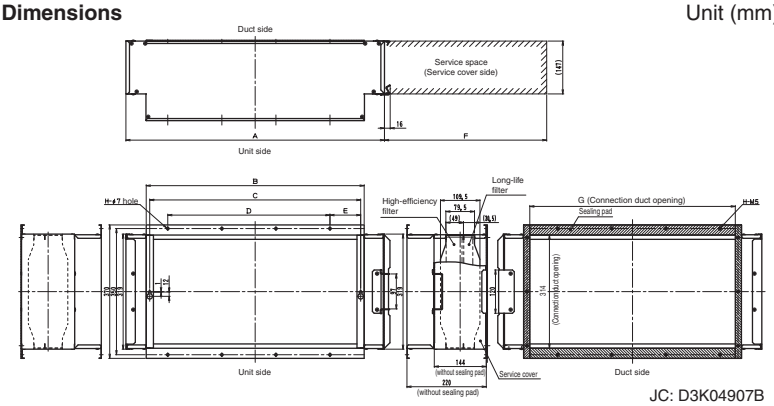

JC: D3K04907B

Model	A	B	C	D	E	F	G	H
KDDFP37A80	717	604.5	585	P150×3=450	82	450	570	14
KDDFP37A160	1107	994	974.5	P150×5=750	127	750	954	18

Item	Model		KDDFP37A80	KDDFP37A160
Inserted filter	65% (colorimetric method)		KAFP372A80	KAFP372A160
	90% (colorimetric method)		KAFP373A80	KAFP373A160
	Long-life filter		KAFP371A80	KAFP371A160
Mass		kg	5.0	7.0
Accessories			Mounting screws. Installation manual.	

- **Set the anchor bolts**
  (the size of anchor boll should be M10.)

Characteristics of filter

■KDDFP37A80 / KDDFP37A160

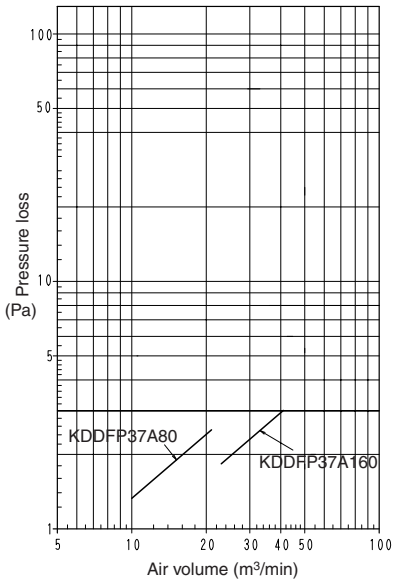

Installations Manual

❶ Before Installation

<The accessories necessary for installation work should not be cast away until the work has been finished.>

(1) Determine a carry-in route.
(2) When carrying in the filter chamber, it should be carried into the place to be installed, in the form of a bale package. If it is carried in at unpacked condition, handling should be made with sufficient care.

❷ Selection of the location to be installed

<Refer to the installation manual attached to the indoor unit.>

(1) For the location to be installed, select the place that conforms to the following conditions, together with customer's agreement.
- The place that has sufficient strength to bear the weight of the indoor unit and filter chamber.
- The place where lower surface of a ceiling is not significantly inclined.
- The place where a service space can be kept from the viewpoint of installation.

(2) There are four directions for removing the maintenance service cover of the filter. Direction of the removal should be changed in accordance with an installed condition. (At shipping, the cover is fitted at the opening and closing location Ⓐ.)
At this time, confirm the vertical direction of the filter chamber, by means of the top joint holes at the right and left sides of the connection side toward an air conditioner body.

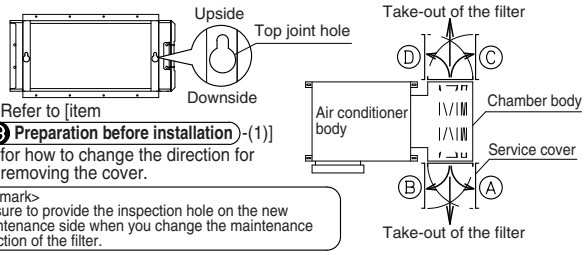

Refer to [item ❸ Preparation before installation -(1)] for how to change the direction for removing the cover.

<Remark>
Be sure to provide the inspection hole on the new maintenance side when you change the maintenance direction of the filter.

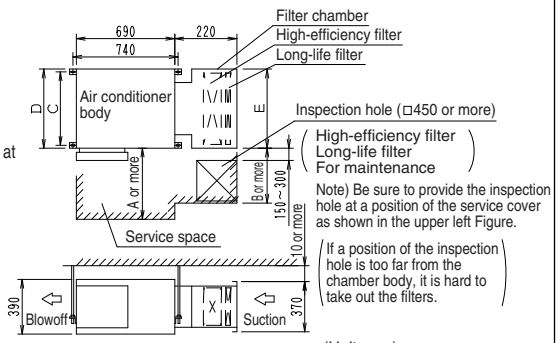

(Unit: mm)

Unit name	A	B	C	D	E
KDDFP37A80	750	450	670	720	720
KDDFP37A160	1100	750	1060	1110	1110

❸ Preparation before installation

<Refer to the installation manual attached to the indoor unit.>

(1) If direction of taking out the filter is changed, the work should be made in the following procedure.
Example) In the case of changing the opening and closing direction of the service cover from Ⓐ to Ⓒ as shown in [item ❷ Selection of the location to be installed -(2)],
1. Detach the buckle for fixing the service cover. (Fig.1)
2. Rotate the service cover until it is detached from the pawl of the temporary latch. (Fig.2)
3. Detach the buckle, latch, and the screws of the side plate. Then, remove the cover from the chamber body. (Fig.3)
4. Relocate the parts detached in accordance with above item 3, to the new position. (Fig.4)
5. Fit the service cover in accordance with the reverse procedure of above item 2, and fix it with the buckle.

<Remark>
Confirm that the service cover is securely fixed with the buckle.
If fixing is not made steadily, it may cause air leakage.

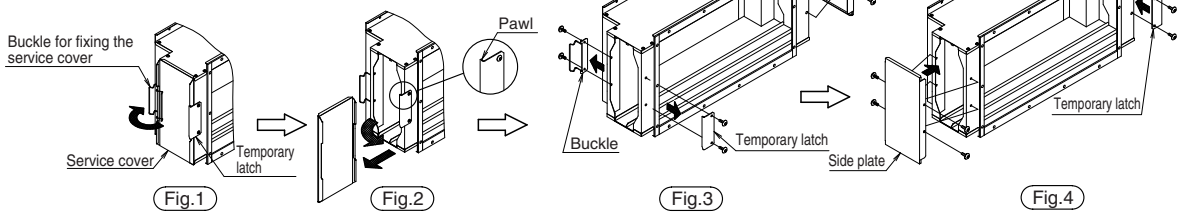

Fig.1 Fig.2 Fig.3 Fig.4

(2) Remove the suction inlet flange of the air conditioner body. (Fig.5)
In the case of connecting the site-duct to the suction side of the filter chamber, fit the removed suction inlet flange to the suction side of the filter chamber, with the screws which has been detached from the air conditioner body.

(3) In the case of connecting the site-duct to the blowoff outlet of the air conditioner body and to the inlet of the filter chamber, fit the canvas duct (ordered at site) to the inlet flange, so that vibration of the machine body may not transmitted to the duct and the ceiling (Fig.6).
Also, carry out lining work of the site-duct with an absorbent (heat insulation material), and fitting of rubber cushions on the hanger bolts for the air conditioner body.

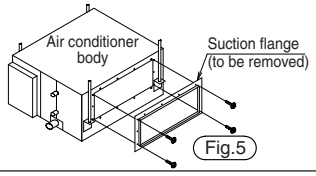

Fig.5

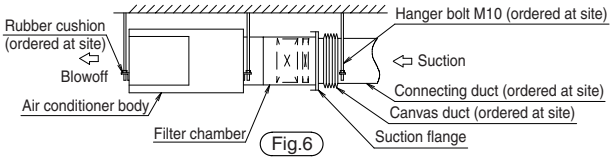

Fig.6

J: 3K016835

❹ Installation of the filter chamber

It is also possible to lift up the products with the hanger bolts, on the condition in which the filter chamber has been previously fitted on the air conditioner body.

(1) Fit the mounting screws which are attached to this kit, onto the air conditioner body at two positions. (Fig.7)
(2) Temporarily hang the air conditioner body with the screws fitted in accordance with above item (1), into the top joint holes of the filter chamber body, from inside.
(3) After tightened the chamber at all the outer screw holes by means of the attached mounting screws, tighten two inside screws which has been used for the temporary hanger. (Fig.8)
(4) The air conditioner body and filter chamber should be installed horizontally by using a level vial etc.

<Remarks>
- If screws are not tightened steadily, it may cause air leakage.
- If the product is not installed horizontally, it may cause air leakage, or take-out of the filter may become difficult.

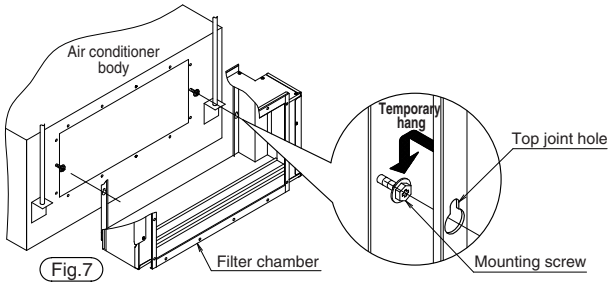

Fig.7

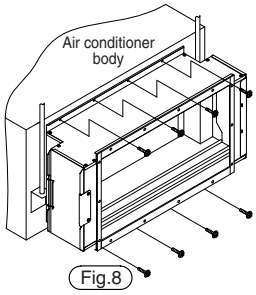

Fig.8

❺ Fitting procedure of the filter

In the case of High-efficiency filter

Fitting procedure is same for both the 65% type and the 90% type.

(1) Remove the service cover. For the method of removal, refer to [item ❸ **Preparation before installation** -(1)]. Detach the buckle for fixing the service cover and then rotate the service cover until it is detached from the pawl of the temporary latch.
(2) Insert the first piece of filter (black Velcro strap attached;) while aligned into the wide filter rails, by setting the arrow mark to an airflow direction such that the filter label comes to upper face.
(3) After confirmed that the first filter has been inserted for more than its half size into the filter chamber, then insert the second piece of filter (white Velcro strap attached;) while fixing it to the first filter using a Velcro strap.
(4) After inserted two filters securely into the back of the filter chamber, fit the service cover in accordance with the reverse procedure of item (1).

<Remark>
Confirm that the service cover is securely fixed with the buckle.
If fixing is not made steadily, it may cause air leakage.

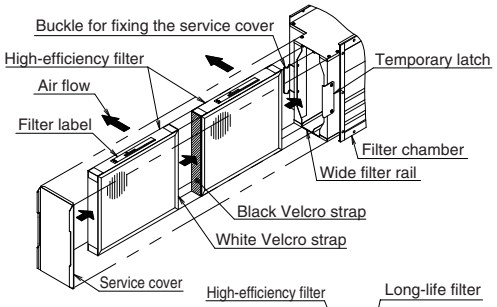

In the case of Long-life filter

(1) Remove the service cover. For the method of removal, refer to [item ❸ **Preparation before installation** -(1)]. Detach the buckle for fixing the service cover and then rotate the service cover until it is detached from the pawl of the temporary latch.
(2) Insert the first piece of filter while aligned into the narrow filter rails, by setting the arrow mark to an airflow direction such that the filter label comes to upper face.
(3) After confirmed that the first filter has been inserted for more than its half size into the filter chamber, then insert the second piece of filter while latching it on the pawl part of the first one. (Fig.9)
The second filter cannot be fully inserted unless directions of the two filters fits.
(4) After inserted the two filters securely into the back of the filter chamber, fit the service cover in accordance with the reverse procedure of item (1).

<Remark>
Confirm that the service cover is securely fixed with the buckle.
If fixing is not made steadily, it may cause air leakage.

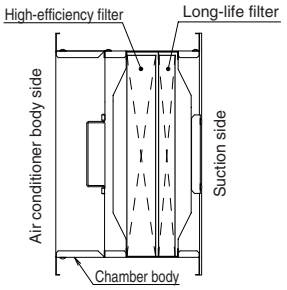

Position of each filter in the side view of the filter chamber
(before the service cover is fitted)

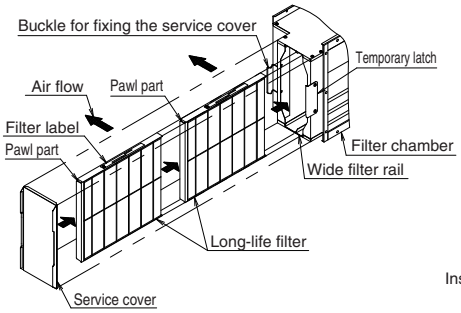

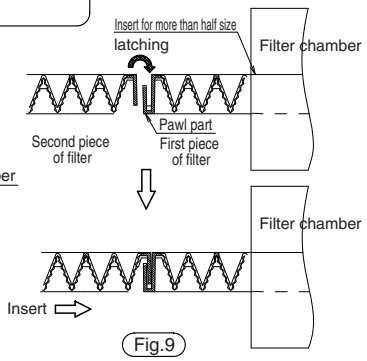

Fig.9

<Remark>
If each direction of the filters is different and when they are tried to be latched each other with their same pawls, the latching cannot be properly made due to the stopper. Consequently, the filters cannot be inserted into the filter chamber.

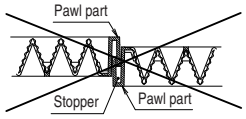

J: 3K016835

10.5 KDJ3705L140 / 280 — Filter Chamber

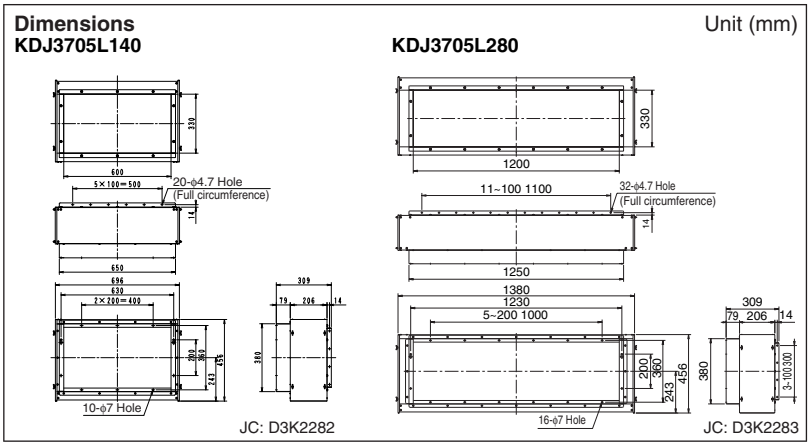

Item	Model		KDJ3705L140	KDJ3705L280
Inserted filter	65% (colorimetric method)		KAFJ372L140	KAFJ372L280
	90% (colorimetric method)		KAFJ373L140	KAFJ373L280
	Long-life filter		KAFJ371L140	KAFJ371L280
Mass		kg	10	14
Specifications			Hot galvanization	
Accessories			Mounting screws. Installation manual.	

Characteristics of filter

■KDJ3705L280

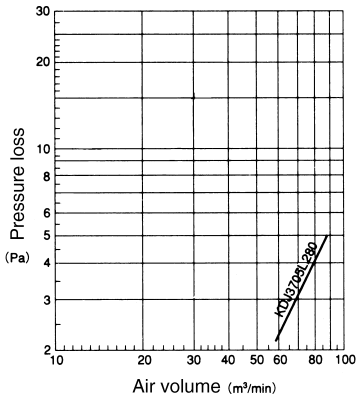

Preparation before installation

Keep a service space on one side of the unit to facilitate replacement of the high-efficiency filter or the long-life filter.

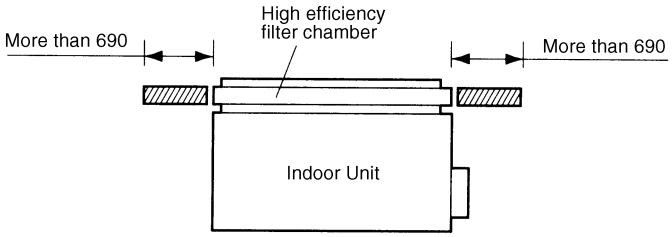

1. Remove the air inlet flange from the indoor unit. (Some models do not have the air inlet flange.)

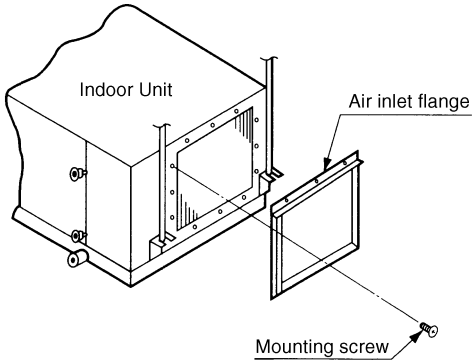

2. Fit the filter chamber on the indoor unit using the supplied screws.

- Tighten the two mounting screws on the indoor unit temporary.
- After temporary fitting the filter chamber, tighten all the screws firmly from the inside of the filter chamber.

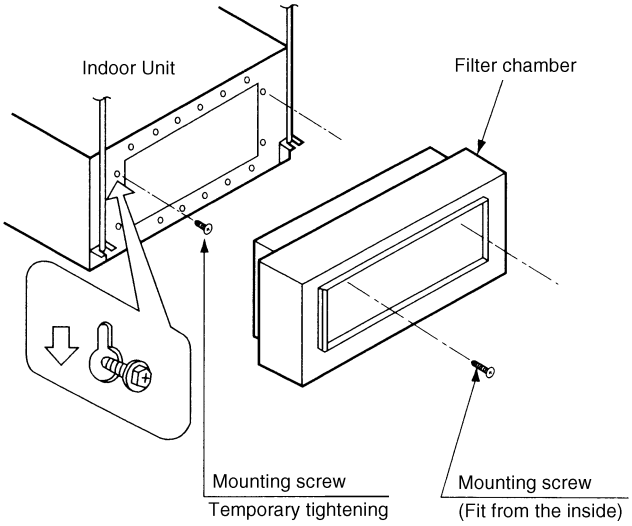

- Prepare the optional high-efficiency filter or long-life filter.

1. Remove the filter chamber cover.
2. Insert the filter.
3. Fit the filter chamber cover.

Caution Align the arrow mark on the high-efficiency filter with the direction of air flow.

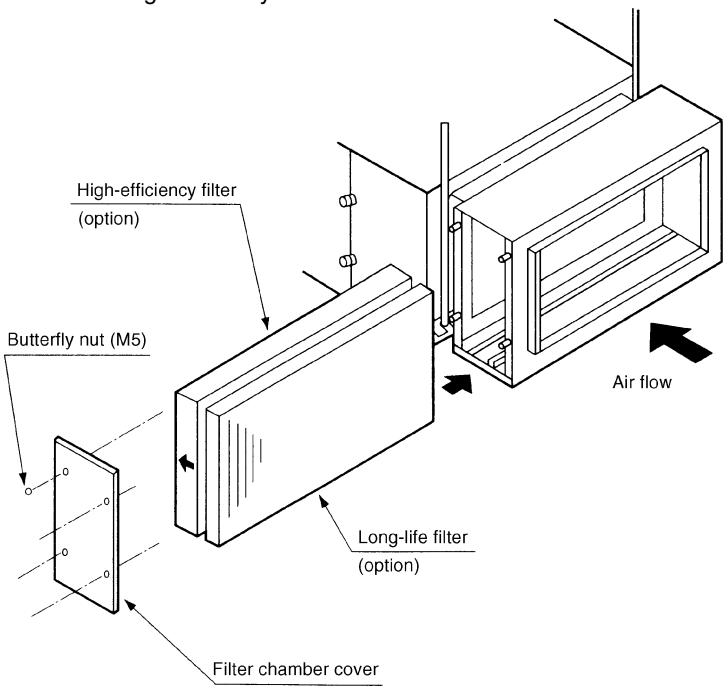

JC: 3K06608

10.6 KAF371AA36 / 56 / 80 / 160 — Long-life Filter

Dimensions Unit (mm)

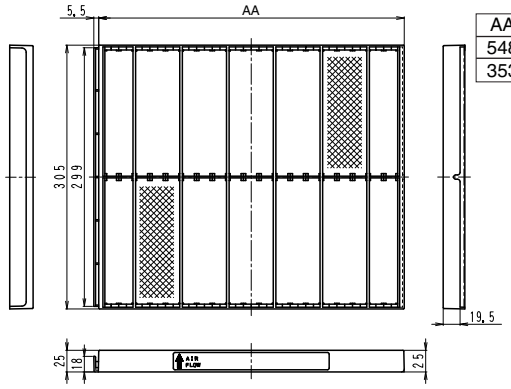

AA	Applied models
548	KAF371AA36
353	KAF371AA56/80/160

J: D3K07004
J: D3K06644

Caution

- Can be water-washed. Can be reused.
- The filter chamber (KDDF37AA36 / KDDF37AA56 / KDDF37AA80 / KDDF37AA160) is required when the long-life filter will be installed.

Item \ Model		KAF371AA36	KAF371AA56	KAF371AA80	KAF371AA160
Initial pressure loss	Pa	3 or less	7 or less		8 or less
Final pressure loss	Pa	49 or less			
Average efficiency	%	50 (gravity method)			
Airflow rate / 1 sheet	m^3/min	9.8			
Life	h	2,500 (dust concentration 0.15 mg/m^3)			
Filter element		Mildew-proof resin net (Polypropylene)			
Filter frame		Polystyrene			
Number of sheets included		1	2	3	4

10.7 KAFP371A80 / 160, KAFJ371L140 / 280 — Long-Life Replacement Filter

KAFP371A80

Dimensions
KAFP371A80/160
Unit (mm)

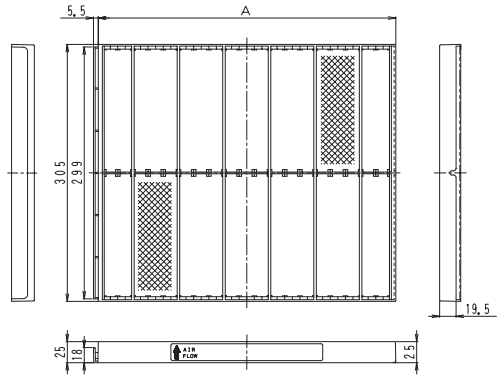

Model	A
KAFP371A80	353
KAFP371A160	548

C: D3K04909A

Caution

- Can be water-washed. Can be reused.
- The filter chamber (KDDFP37A80/160, KDJ3705L140/280) is required when the long-life filter will be installed.

Dimensions
KAFJ371L140/280
Unit (mm)

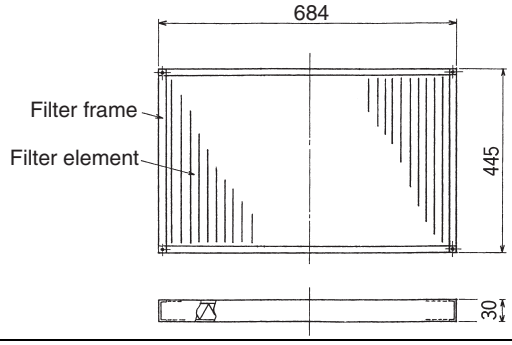

JC: D3K2287
JC: D3K2288

Specifications

Item / Model		KAFP371A80	KAFP371A160	KAFJ371L140	KAFJ371L280
Filter chamber for bottom suction		KDDFP37A80	KDDFP37A160	KDJ3705L140	KDJ3705L280
Dimensions (W×D×T)	mm	358.5×305×25	553.5×305×25	684×445×30	
Initial pressure loss	Pa	7 or less	8 or less	9.8 or less	
Final pressure loss	Pa	49 or less			
Average efficiency	%	50 (gravity method)			
Life	h	2,500 (dust particle concentration at 0.15mg/m³)			
Filter element		Mildew-proof resin net (Polypropylene)			
Number of sheets included		2	2	1	2 (each 1)
Mass	kg	0.3	0.4	1.4	1.4×2

Characteristics of filter

■KAFP371A80 / KAFP371A160

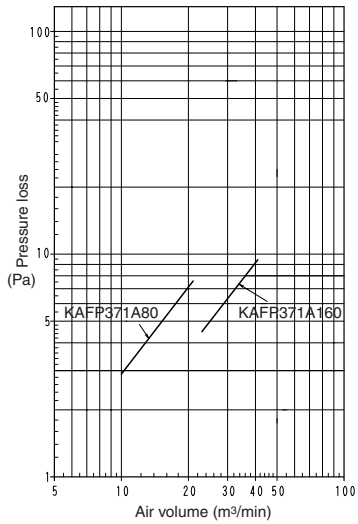

10.8 KAF375AA36 / 56 / 80 / 160 — Long-Life Filter Chamber Kit

Item \ Model		KAF375AA36	KAF375AA56	KAF375AA80	KAF375AA160
Long-life filter *1		KAF371AA36	KAF371AA56	KAF371AA80	KAF371AA160
Accessories		Mounting screws. Installation manual.	Protection net. Mounting screws. Installation manual.		
Mass	kg	4	4.5	5.5	7.5

Note: *1. The long-life filter is packed inside the chamber.

Dimensions
KAF375AA36

Unit (mm)

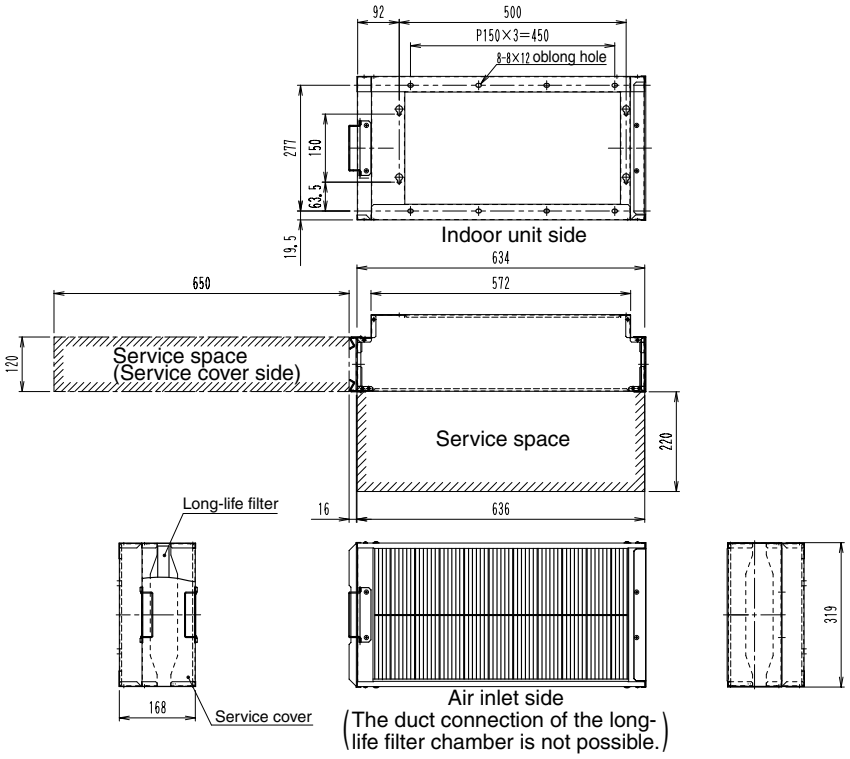

J: D3K07519A

KAF375AA56 / KAF375AA80 / KAF375AA160

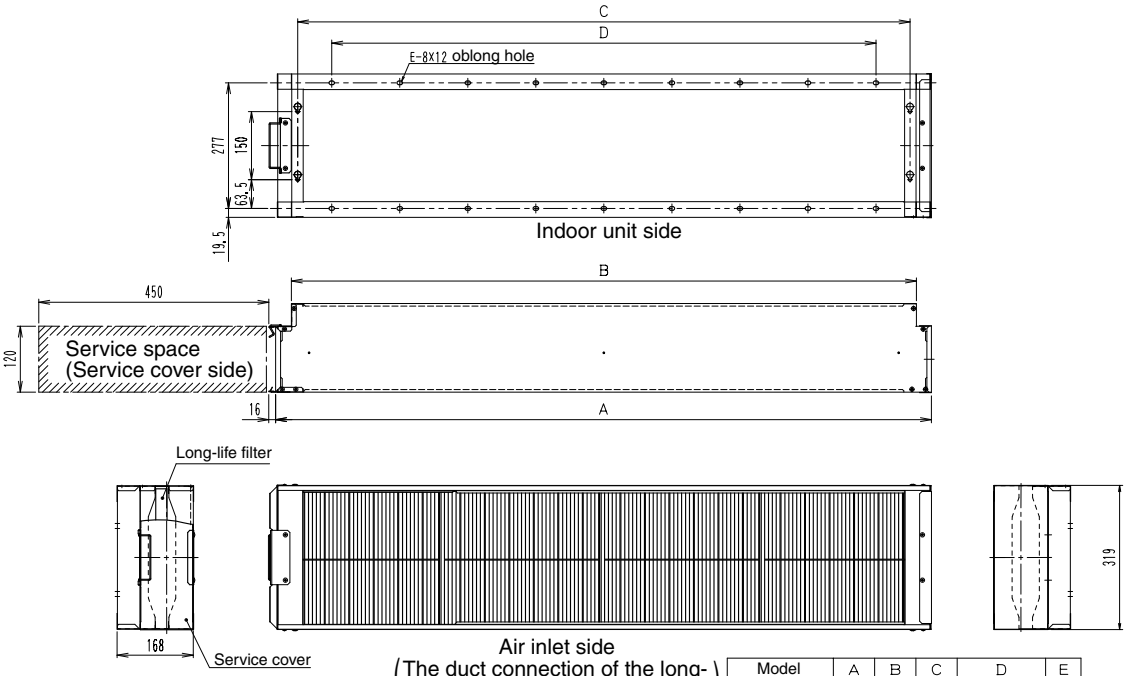

Model	A	B	C	D	E
KAF375AA56	720	690	650	P150×4=600	10
KAF375AA80	1080	1020	950	P150×6=900	14
KAF375A160	1440	1380	1350	P150×8=1200	18

J: D3K06729A

Installation Manual

DAIKIN AIR CONDITIONERS Long-life Filter Chamber Kit《Ceiling Mounted Duct Connection Type》Installation Manual

KAF375AA36 • 56 • 80 • 160

Read this manual in advance and follow all the instructions given in the manual to conduct the installation of the product.

⚠Precautions Conduct the installation of the product correctly after carefully reading the safety precautions specified below.

- Request your dealer or contractor to conduct the installation of the product. Users' unauthorized installation work may result in the falling of the product or air leakage.
- Conduct the installation of the product correctly by following all the instructions given in the manual. A defect in the installation work may result in the falling of the product or air leakage.
- Be sure to use parts specified in this manual and the accessories provided with the product for the installation of the product. Failure to use these parts may result in the falling of the product or air leakage.
- Conduct the trial operation of the product after the installation of the product and check that there are no abnormalities.

Parts Make sure that the following parts are provided with the product.

Name		Filter Chamber	Long-life filter	Protection net	Mounting screw	Mounting screw	Installation Manual
Shape					M5×16	M4×16	
Number	KAF375AA36	1	1	—	12	—	1 (This copy)
	KAF375AA56		2	1	14	2	
	KAF375AA80		3		18	4	
	KAF375AA160		4		22	4	

The above long-life filters are packed inside the chamber.

Precautions

- This product can be mounted to air conditioners of ceiling mounted duct connection type.
- Mount the product after checking the model name of the indoor unit with the table on the right-hand side.
- Refer to the operation manual and installation manual for the indoor unit as well at the time of the installation of the product.
- The duct connection of the long-life filter chamber is not possible.
- Long-life filter
  The long-life filter can be washed and used again. On completion of installation, advise the customer of the cleaning interval and removal method of the filter by using the operation manual for the indoor unit and this installation manual.

❶ Before installation Do not throw away the required accessories until the installation of the product is completed.

(1) Decide the carry-in route.
(2) Carry the product into the place of installation without unpacking the product. If it is unavoidable to unpack and carry in the product, pay the utmost attention to handle the product.

❷ Selecting Place of Installation 《Refer to the installation manual provided to the indoor unit as well.》

(1) Select the place of installation with the consent of the customer, provided that the following conditions are satisfied.
- A place bearing the weight of the indoor unit and filter chamber.
- A place where the lower part of the ceiling does not lean remarkably.
- A place where an installation workspace can be secured.

(2) Either the left- or right-hand side service cover can be used to remove the filters. Select the direction of removal according to the condition of installation.
(The service cover in position Ⓐ is set for opening and closing before shipping.) At that time, confirm the up-and-down direction of the filter chamber through the snap holes located on the left- and right-hand sides of the frame on the air conditioner connection side.

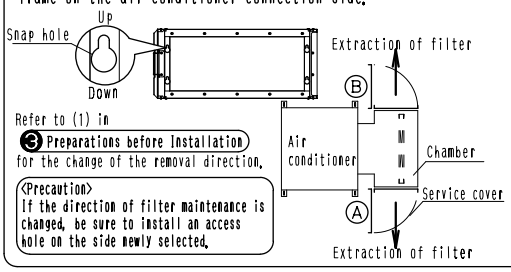

Refer to (1) in ❸ Preparations before Installation for the change of the removal direction.

<Precaution>
If the direction of filter maintenance is changed, be sure to install an access hole on the side newly selected.

(3) Install the access hole for the filter service space as shown below.
- Refer to the installation manual for the indoor unit and provide a service space for the indoor unit.
- In the case of performing the maintenance of the long-life filters from the back (on the suction side), install an inspection panel (optional accessory) on the air inlet side.

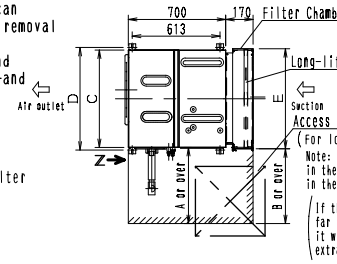

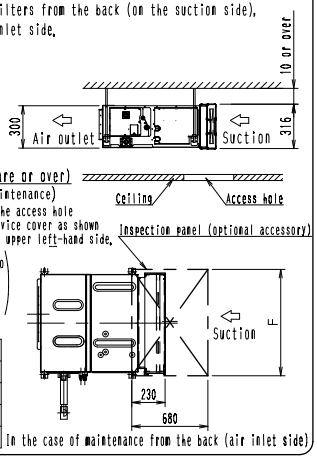

(Unit : mm)

Unit Name	A	B	C	D	E	F
KAF375AA36	650	650	550	588	633	606
KAF375AA56	450	450	700	738	720	756
KAF375AA80	450	450	1000	1038	1080	1056
KAF375AA160	450	450	1400	1438	1440	1456

In the case of maintenance from the back (air inlet side)

❸ Preparations before Installation 《Refer to the installation manual provided to the indoor unit as well.》

(1) Take the following procedure in the case of changing the direction of filter extraction.
Example: When changing the opening and closing direction of the service cover from Ⓐ to Ⓑ as shown in ❷ Selecting Place of Installation -(2).
1. Remove the fixing buckle for the service cover. (Fig. 1)
2. Rotate the service cover until the service cover is released from the tabs of the temporary latches. (KAF375AA56・80・160) Remove the the service cover. (KAF375AA36) (Fig. 2)
3. Remove the fixing buckle for the service cover, temporary latches, and the screws on the side plates. (Fig. 4)
4. Mount the parts with the screws removed in step 3 to the opposite side.
   Insert the protruding seal material on the side plate into the rail side of the filter.
5. Mount the service cover in the order opposite to that in step 2, and fix the cover with the fixing buckle.

<Precaution>
Check that the fixing buckle securely locks the service cover. Otherwise, air leakage may result.

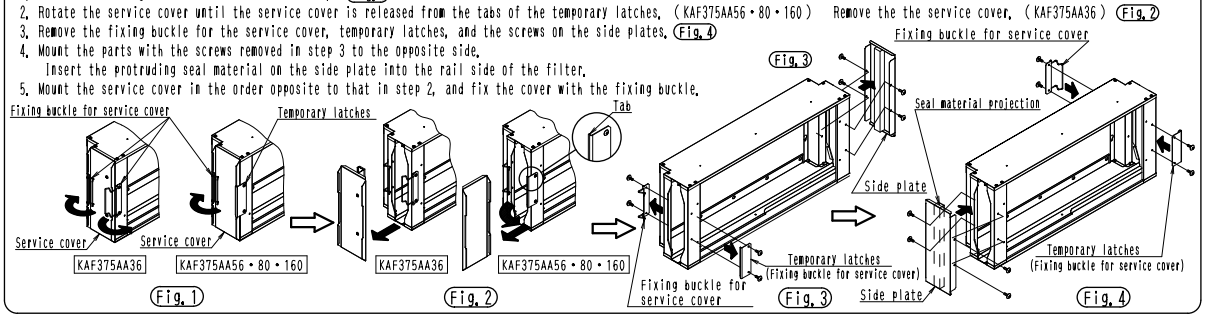

C: 3K021008

(2) Remove the long life filters from the chambers in advance. (Fig. 5)
Refer to (1) in ❸ Preparations before Installation and remove the service cover.
Remove the fixing buckle for the service cover and rotate the service cover until the service cover is released from the tabs of the temporary latches.

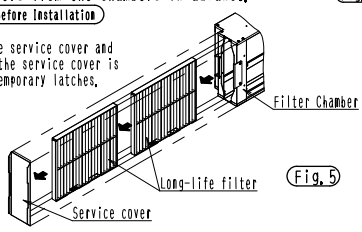

Fig. 5

(3) Remove the air inlet flange of the indoor unit. (Fig. 6)
No on-site duct can be connected to the air inlet side of the filter chamber.

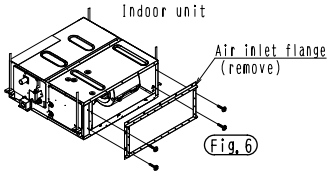

Fig. 6

❹ Attachment of Protection Net 《Except KAF375AA36》

(1) Attach the protection net to the indoor unit.
Insert the tabs of the protection net as shown in Fig. 7 into the long circular holes on the upper part of the indoor unit as shown in Fig. 8.
(2 places for type 56 and 4 places for type 80 and type 160)
(2) As shown in Fig. 9, secure the protection net attached to the indoor unit in (1) with mounting screws.
(2 places for type 56 and 4 places for type 80 and type 160)

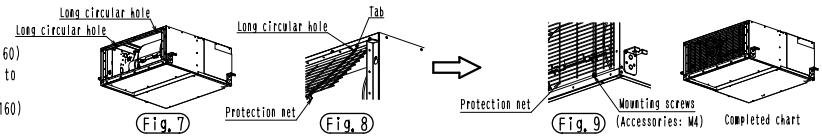

Fig. 7 Fig. 8 Fig. 9

❺ Installation of Filter Chamber

The filter chamber mounted to the indoor unit can be hung on the suspension bolts.
(1) Attach the mounting screws provided with the kit to the 4 points of the indoor unit. (Fig. 10)
(2) Temporarily secure the chamber with the screws prepared in (1) through the snap holes from the inner side of the chamber.
(3) Tighten the 4 temporarily secured screws after tightening the provided mounting screws (Fig. 11)
(8 screws for type 36, 10 screws for type 56, 14 screws for type 80, and 18 screws for type 160) in all the screw holes in the chamber
(4) Use an appropriate tool, such as a spirit level, and install the indoor unit and filter chamber horizontally.

<Precaution>
- Air leakage may result if the screws are not tightened securely.
- Air leakage may result or the filters may not be extracted with ease if the filter chamber is not installed horizontally

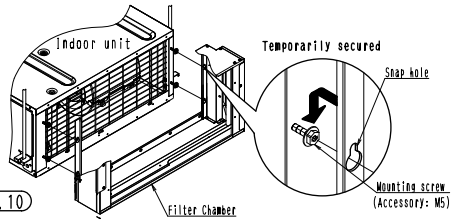

Fig. 10

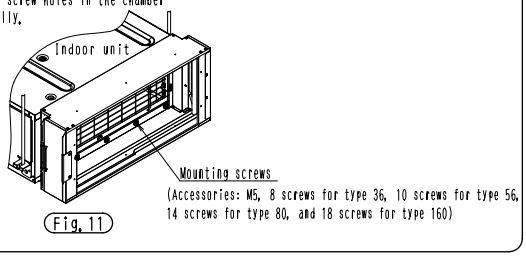

Fig. 11

❻ Mounting Procedure for Long-life Filter

Mounting of Long-life Filter

(1) Refer to (1) in ❸ Preparations before Installation and remove the service cover.
Remove the fixing buckle for the service cover and rotate the service cover until the service cover is released from the tabs of the temporary latches.
(2) Insert the filter according to the filter rail with the filter label faced downward while checking that the airflow direction is in conformity with the direction of the arrows.
(3) Be sure to hook the next filter to the tab on the first filter and insert the next filter when more than half the first filter is inserted.
The filter cannot be inserted unless the direction of the filter is correct. (Except KAF375AA36) (Fig. 12)
(4) After inserting the filter all the way into the filter chamber, mount the service cover in the order opposite to that in (1).
(Number of filters: 1 for type 36, 2 for type 56, 3 for type 80, and 4 for type 160)

<Precaution>
Check that the fixing buckle securely locks the service cover.
Otherwise, air leakage may result.

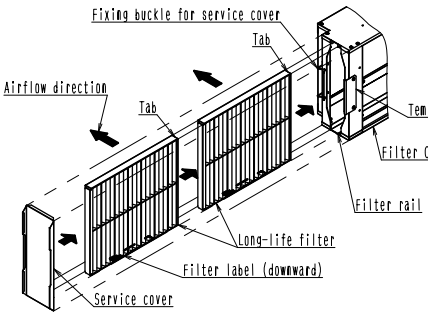

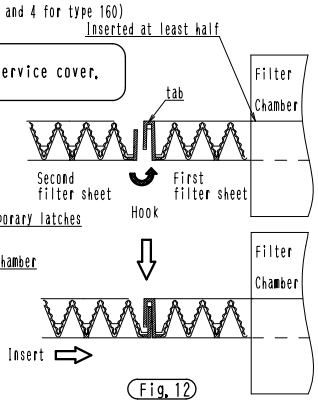

Fig. 12

<Precaution>
If the filters are different to each other in direction, the stoppers will obstruct the engagement of the filters with the tabs. Therefore, the filters cannot be inserted into the filter chamber.

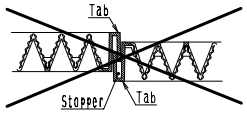

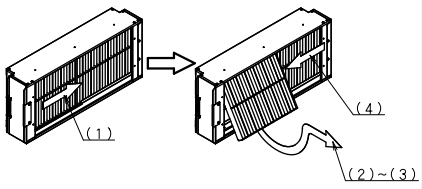

Removal of long-life filter from the back

(1) Push the filter in the direction of arrows.
(2) Lift the filter on the left front side a little, and rotate and remove the lower side to the air inlet side from the rail.
(3) Extract the filter after pulling and removing the upper part of the filter in the front direction from the rail.
(4) Shift the remaining filters to the left front side in sequence, and remove the filter like the first one explained in step (3). (Except KAF375AA36) (Fig. 13)

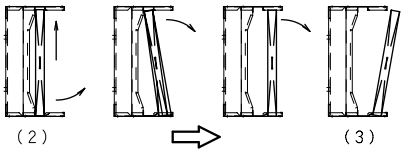

Fig. 13

3K021008

10.9 KDU30L250VE — Drain Pump Kit

Caution

Arm space/length at the ceiling should be higher/longer by at least 120 mm than the standard dimension.

Dimensions Unit (mm)

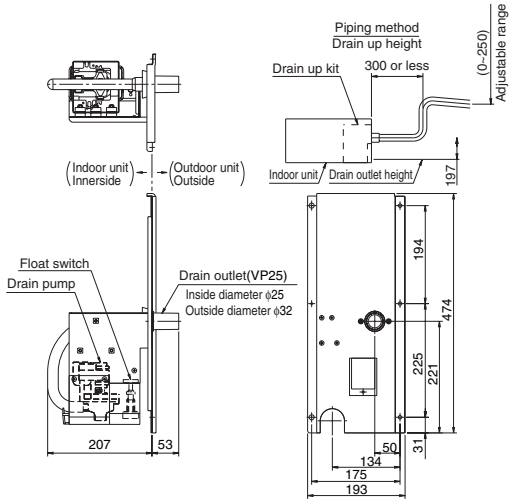

Item / Model		KDU30L250VE
Power supply		Single phase 220-240/220V 50/60Hz
Power consumption	W	19/17 (50/60Hz) (when Idling)
Drain-up Lift	mm	Standard drain outlet of the unit +197~+447
Drain outlet		VP25 (External dia. ϕ32, Internal dia. ϕ25)
Safety device		Float switch
Mass	kg	10
Accessories		Drain pump box. Drain connection pipe. Drain hose. Hose band. Sealing pad. Clamp. Mounting screw.

Installation Manual

Installation space

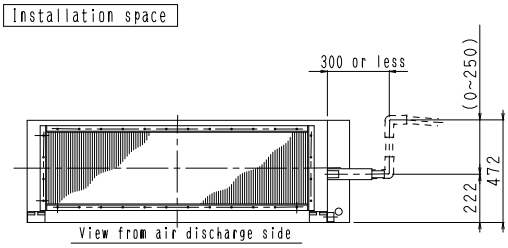

Notes on installation

If the drain pump kit has already been installed, note the following when installing the indoor unit.

- Do not install the indoor unit on an incline against drainage flow (away from the drain outlet). This can lead to water leaks.

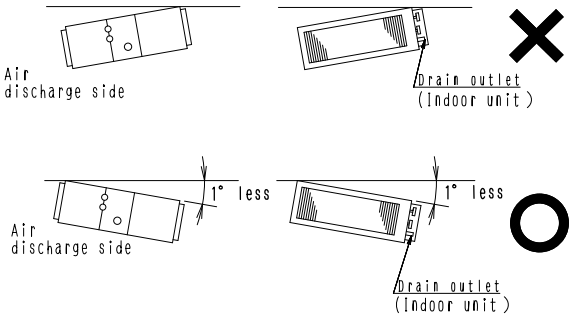

Accessories Check the following accessories are included in the kit.

Name	Drain hose	Hose band	Sealing pad	Plug cover	Relaying wire harness	Plug
Quantity	1pc.	1pc.	1pc.	1pc.	1pc.	1pc.
Shape						

Name	Screw(M5)	Side plate	Drain pump assy	Thermal insulation(1)	Thermal insulation(2)	(OTHER)
Quantity	3pcs.	1pc.	1pc.	1pc.	1pc.	• INSTALLATION MANUAL • Clamp
Shape						

Tools required for the installation work

Screwdriver(⊕)、Nipper

1 Installation procedure ≪Wiring is easier if done before the unit is hung from the ceiling or the intake duct attached.≫
≪If wiring after installing the suction duct, remove the electric parts box.≫

Note When installing the drain pump ass'y on the indoor unit, do not hold the unit by the drain socket. The socket neck will break under pressure and consequently cause water to leak.

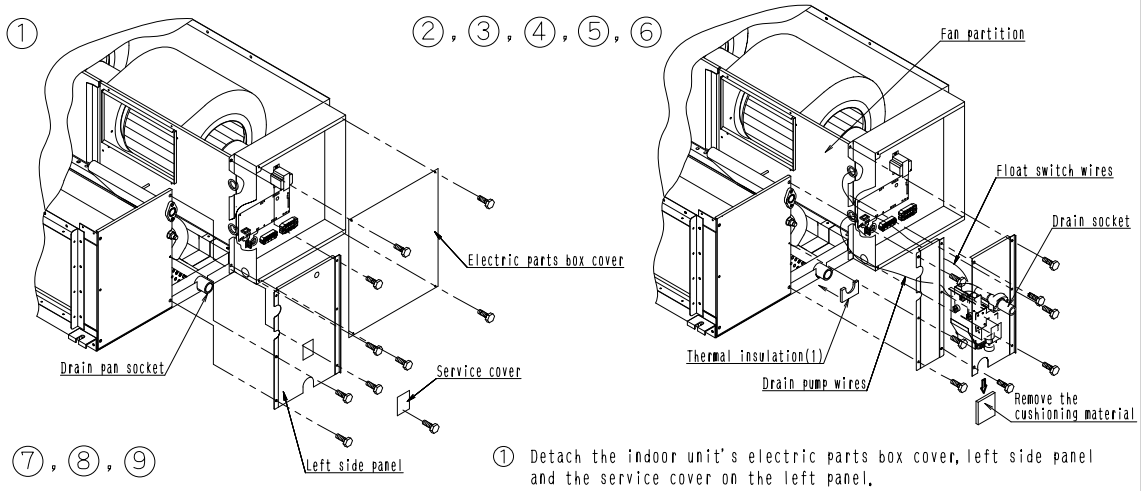

⑦, ⑧, ⑨

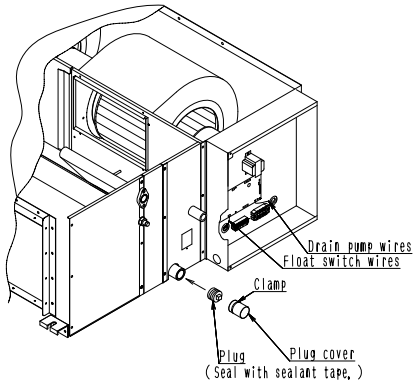

① Detach the indoor unit's electric parts box cover, left side panel and the service cover on the left panel.
(The left side panel is unnecessary.)

② Stick the attached thermal insulation(1) to the lower part of drain pan socket.

③ Feed the drain pump wires from the drain pump ass'y through the rubber bush on the lower half of the fan partition.

④ Feed the float switch wires from the drain pump ass'y through the rubber bush on top half of the fan partition.

⑤ Install the drain pump ass'y inside the indoor unit.

⑥ Attach the included side panel to the indoor unit.

⑦ Feed the float switch wires into the electric parts box from the rubber bush on the lower left side of the box.

⑧ Connect the included relay harness to the drain pump wires and feed it into the electric parts box through the lower right rubber bush.

⑨ Attach the included plug to the drain pump socket of the indoor unit and insulate the plug cover, mounting the clamp.
Wrap the thermal insulation(2) over the clamp.
Seal the plug to ensure water does not leak.

C: 1P031043

❷ Indoor unit installation

① Install the unit temporarily.
② Using the attached positioning jig for installation, adjust the height of the unit.
③ Check the unit is horizontally level.
⚠ The unit is equipped with a built-in drain pump and float switch. Level the four corners with a conventional level or a vinyl tube containing water.
(If the unit is tilted against condensate flow, the float switch may malfunction and cause water to drip.)

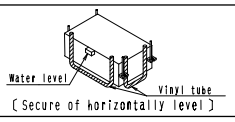

❸ Drain piping work

<<Rig the drain pipe as shown below and take measures against condensation.>>
<<Improperly rigged piping could lead to leaks and eventually wet furniture and belongings.>>

Install the drain pipes.
- The diameter of the drain pipe shoud be greater than or equal to the diameter of the connecting pipe. (Vinyl tube; pipe size: 25 mm; outer dimension 32 mm).
- Keep the drain pipe short and sloping downwards at a gradient of at least 1/100 to prevent air pockets from forming.
- If the drain hose cannot be sufficiently set on a slope, execute the drain raising piping.
- To keep the drain hose from sagging, space hanging wires every 1 to 1.5 m.

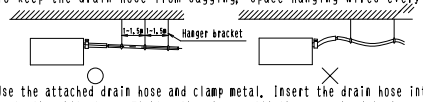

- Use the attached drain hose and clamp metal. Insert the drain hose into the drain socket, up to the white tape. Tighten the clamp until the screw head is less than 4 mm from the hose.
- Wrap the attached sealing pad over the clamp and drain hose to insulate.
- Insulate the drain hose inside the building.
- **Be sure to insulate the following two items in order to prevent water leakage caused by condensation.**
  - **Indoors drain pipng**
  - **Drain socket**

While referring to the figure on the right, insulate the clamp and drain hose with the attached large sealing pad.

<Precaution for drain raising piping>
- Install the drain raising pipes at a height of less than 250 mm.
- Install the drain raising pipes at a right angle to the indoor unit and no more than 300 mm from the unit.

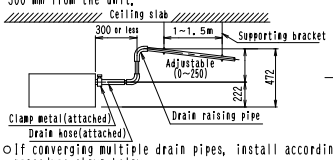

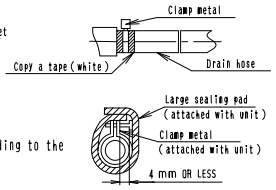

- If converging multiple drain pipes, install according to the procedure shown below.

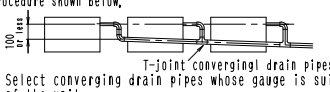

Select converging drain pipes whose gauge is suitable for the operating capacity of the unit.

❹ Electric wiring work

Wire the drain pump kit as explained here below. Be careful not to wire incorrectly.
Install terminals, connectors and screws so that they do not come loose. Also, cover all spliced wires to prevent contact.
- Detach the indoor unit's electric parts box cover.
- Wire as follows.

1. Wire as indicated in the below right illustration and in included wiring diagrams.
2. Remove the short-circuiting bar from X8A on the indoor unit PC board (inside electric parts box) and connect the float switch wires.
3. Connect the included relay harness to the drain pump wire connector.
4. Connect the drain pump wires to the Y1 and Y2 terminals on the indoor unit PC board.
5. When finished wiring, draw up wire slack, bundle neatly and lock down.

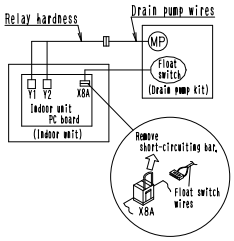

❺ Test operation

Check drain pump kit installation and wiring connecions again.
Next, to check drain up kit drainage, slowly pour about 1,000 cc of water into the drain pan from the water port on the indoor unit.
Check water flows smoothly. (The outlet socket of the drain pump kit is transparent, so drainage can be easily checked.)
Make the test operation as follows.

When electric wiring work is finished

- Check drainage flow during COOL running.

When electric wiring work is not finished

- Detach the electric parts box cover and connect the remote controller and power supply to the indoor unit.
- Set the test operation mode from the remote controller and press the MODE button until displaying "FAN". Then, press the START/STOP button. The indoor unit's fan and drain pump will start up and drainage can be checked.
- Be careful with power ON because the fan will turn.

※When finished the test operation, reattach the service cover removed in step [1] of [Installation procedure].

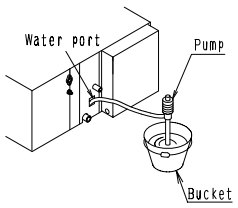

❻ Post-installation checks

After installing the equipment, make the following checks.

Items to be checked	Check
That the indoor unit and drain pump are level.	
That the drain hose is properly connected (No fear of water leaks).	
That the drain hose is sloping downward (1/50~1/100 gradient).	
That the drain hose is properly insulated.	
That wiring is correct.	

1P031043

10.10 KDU-30L125VE — Drain Pump Kit

Dimensions
KDU-30L125VE

Unit (mm)

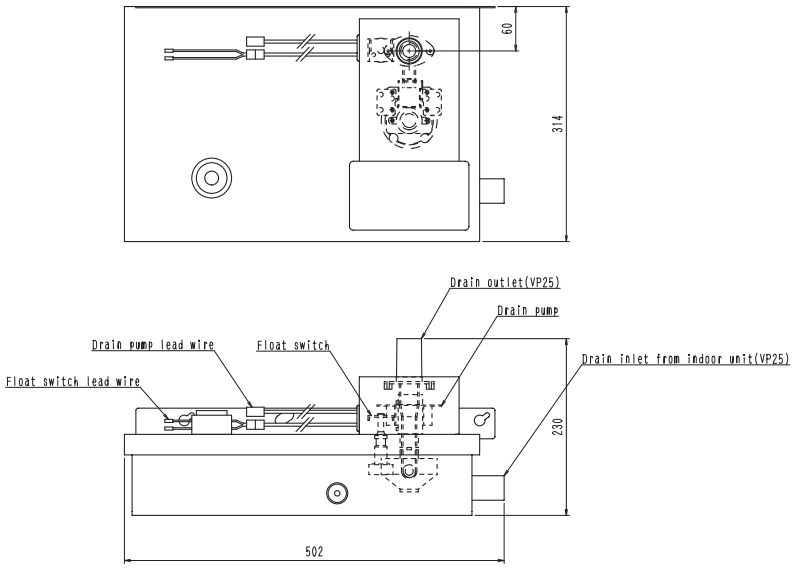

D3K03240

Item / Model		KDU-30L125VE
Power supply		Single phase 220-240V/220V (50/60 Hz)
Power consumption	W	12/11
Pump height		300-750 mm from indoor unit outlet
Mass	kg	5.8
Accessories		Drain connector. Drain horse. Horse band. Thermal insulation. Clamp. Screw. Hanger. Installation manual.

Caution
The bottom surface of this kit should be located at a level 120 mm lower than the bottom surface of the indoor unit. Therefore, arm space/length at the ceiling should be higher/longer by at least 120 mm than the standard dimension.

Installation Manual

Installation space

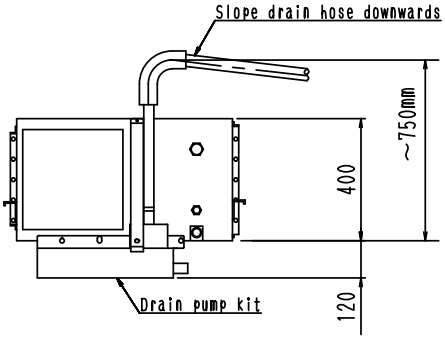

Provide a inspection hatch in a postion whitch makes it easy to service the indoor unit and drain pump kit.
(See the service space for the indoor unit)
Refer to the installation manual provided with the indoor unit.

Installation precautions

If the drain pump kit has already been installed, note the following points when installing the indoor unit.

- Do not install the indoor unit on an incline against drainage flow (away from the drain outlet). This can lead to water leaks.

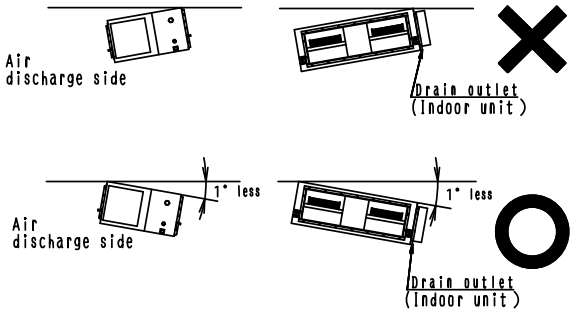

Accessories

Check the following accessories are included in the kit.

Name	Drain Pump	Hanger	Drain hose	Drain hose	Hose band	Thermal insulation(1)
Quantity	1pc.	1pc.	1pc.	1pc.	3pcs.	2pcs.
Shape	①	②	③	④	⑤	⑥

Name	Thermal insulation(2)	Clamp	Screw	Installation manual	PCB Support	Terminal PCB
Quantity	4pcs.	2pcs.	3pcs.	1pc.	4pcs.	1pc.
Shape	⑦	⑧	⑨	⑩	⑪	⑫

Name	Terminal PCB mounting plate
Quantity	1pc.
Shape	⑬

Tools required for the installation work

Screwdrivers(⊕,⊖)、Nippers, Spanner

Preparations of installation

① Installation space.

The height in the ceiling is necessary more than 520mm.
(See the right illustration.)
Set the service hole located at the indoor unit and the drain kit.
(See the service space of the indoor unit)

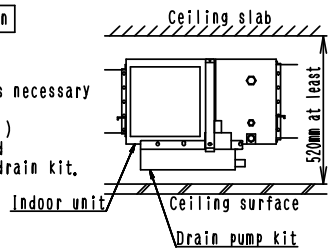

② Installation drain pump kit.

Install this kit after hanging the indoor unit.
Installation before hanging the indoor unit causes damege.
(This drain pump kit is installed below the indoor unit by 120mm.)

In case of installation this kit before installation the indoor unit, set the indoor unit on the wooden blocks.
Do not give an excessive load after installation this kit.
(Take special care of the socket.)

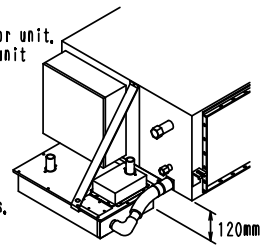

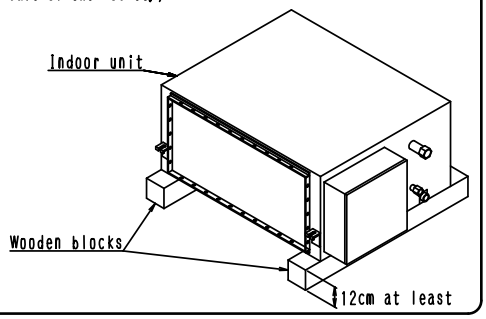

C: 3K010504A

1 Installation procedure

Note)Install the indoor unit on the ceiling first.

① Installation of the drain pump kit on the indoor unit.

1. Remove the screw from the right side of the indoor unit switchbox and tighten the screw temporarily to hold the hanger.

(Note)Screws of the indoor unit are covered with the thermal insulations. Remove the screw through the thermal insulation.

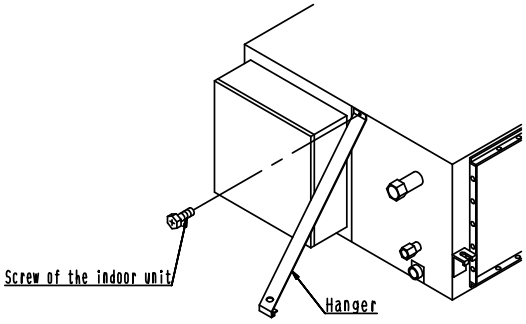

2. Loosen two screws of the indoor unit until the screwhead are no less than 5mm from the indoor unit.

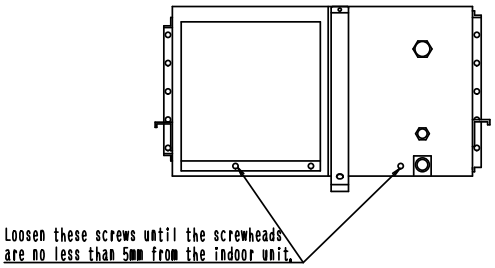

3. Insert these screws of the indoor unit into the key holes of the drain pump kit.

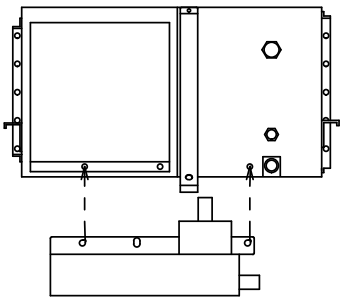

4. Hang the lower hanger to the flange of the drain pump kit and tighten the attached screw through the sealant of the drain kit flange.

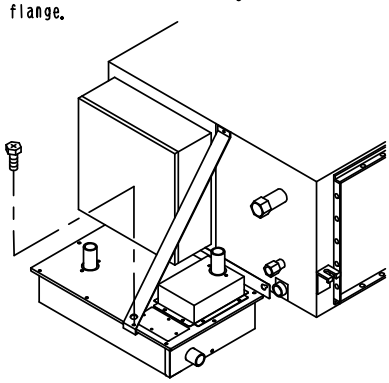

5. Tighten the two screws removed before (term 1, 2).

② Connect the drain connection hose from the drain pump kit to the indoor unit.

(Note)Connect the drain connection hose from the elbow of the connection hose to the drain pump box. Connect the attached drain hose to the outlet of the drain pump.

(Note)Keep the drain hose sloping downwards.

1. Tighten the attached hose band.
2. Insulate the hose band (3 items) except the outlet of drain pump after checking the drainge.
(Note)Insulate the elbow of the drain conector and foam insullation.

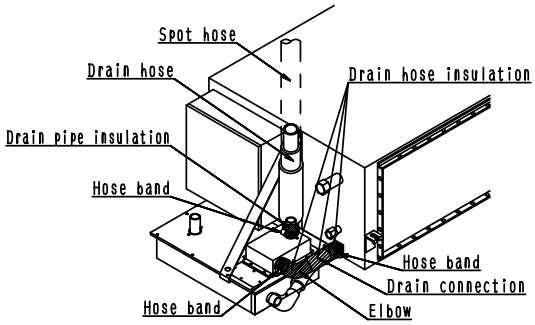

2 Indoor unit installation

①Install the unit temporarily.
②Using the attached positioning jig for installation, adjust the height of the unit.
③Check the unit is horizontally level.

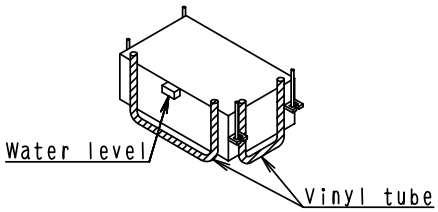

〔Secure of horizontally level〕

⚠ **The unit is equipped with a built-in drain pump and float switch. Level the four corners with a conventional level or a vinyl tube containing water.**

(If the unit is tilted against condensate flow, the float switch may malfunction and cause water to drip.)

C: 3K010504A

③ Drain piping work

《Rig the drain pipe as shown below and take measures against condensation.》
《Improperly rigged piping could lead to leaks and eventually wet furniture and belongings.》

Install the drain pipes.

1. The diameter of the drain pipe shoud be greater than or equal to the diameter of the connecting pipe. (Vinyl tube; pipe size: 25 mm; outer dimension 32 mm).
2. Keep the drain pipe short and sloping downwards at a gradient of at least 1/100 to prevent air pockets from forming.
3. If the drain hose cannot be sufficiently set on a slope, execute the drain raising piping.
4. To keep the drain hose from sagging, space hanging wires every 1 to 1.5 m.

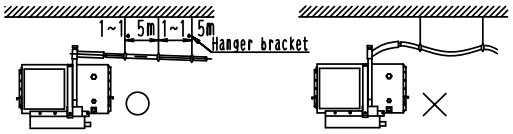

<Precaution for drain raising piping>

1. Install the drain raising pipes at a height of less than 750mm from the indoor unit outlet.
2. Install the drain paising pipes at a right angle to the indoor unit.

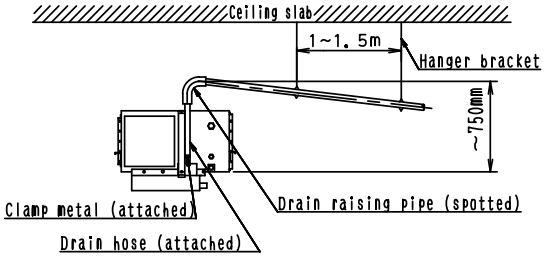

3. It convenging multiple drain pipes, install according the procedure shown below.

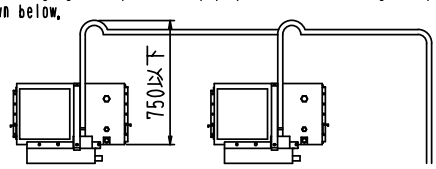

④ Electric wiring work

Wire the drain pump kit as explained here below. Be careful not to wire incorrectly.
Install terminals, connectors and screws so that they do not come loose. Also, cover all spliced wires to prevent contact.

1. Detach the indoor unit's electric parts box cover.
2. Wire as follows.

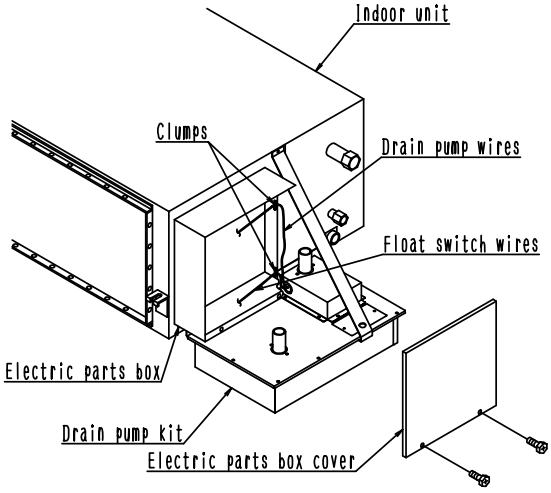

1. Wire as indicated in the below right illustration and in the included wiring diagrams.
2. Fix the attached terminal PCB mounting plate on the indoor unit switch box and mount the terminal PCB. (✱1)
3. Remove the X8A connector (green) on the indoor unit PCB and reconnect it to CN2 on the terminal PCB (attached). (✱1)
4. Connect the float switch lead wires that come out from the kit to CN1 on the terminal PCB (attached). (✱1)
5. Connect the lead wires that come out from CN3 on the terminal PCB (attached) to X8A on the indoor unit PCB. (✱1)
6. Connect the drain pump lead wires to Y1 and Y2 on the indoor unit PCB.
7. When finished wiring, draw up wire slack, bundle neatly and lock down.

(✱1)See the wiring diagrams.
if the float switch is not connect to X8A on the indoor unit PCB, connect the float switch lead wires of the kit directly to X8A.

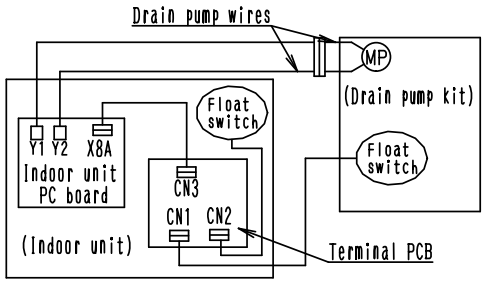

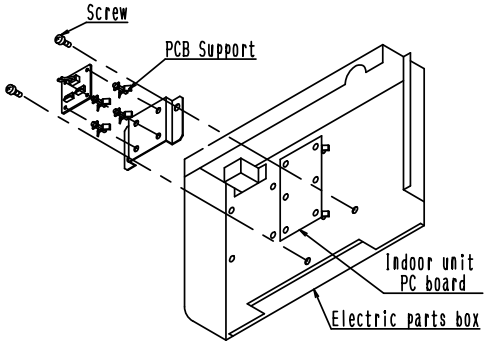

C: 3K010505A

5 Test operation

Check drain pump kit installation and wiring connections again. Then, to check the drain status of the drain up kit, remove the access hole cover of the indoor unit and slowly pour 1000 cc of water through the access hole and check if water smoothly flows out or not.
(The outlet socket of the drain pump kit is transparent, so dranage can be easily checked.)
(Note)Be catetul not to spatter wires with water while pouring.
Make the test operation as belows.

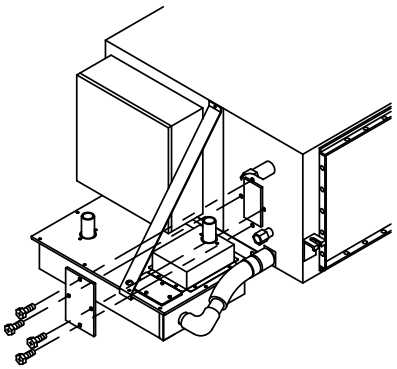

When electric wiring work is finished

○Check drainage flow during COOL running.

When electric wiring work is not finished

1. Detach the electric parts box cover and connect the remote controller and power supply to the indoor unit.
2. Set the test operation mode from the remote controller and press the MODE button until displaying "FAN". Then, press the START/STOP button. The indoor unit's fan and drain pump will start up and drainage can be checked.
3. Be careful with power ON because the fan will turn.

※When finished the test operation, reattach the service cover removed in step [1] of [Installation procedure].

Note on draining water in maintenance

After every cooling season is over, clean the drain up pump kit.

1. Make sure to drain off the water from the kit.
   After pulling out the drain plug and discharging drain water in the drain pan, about 300cc of water is stagnant in the dam of the drain pan.

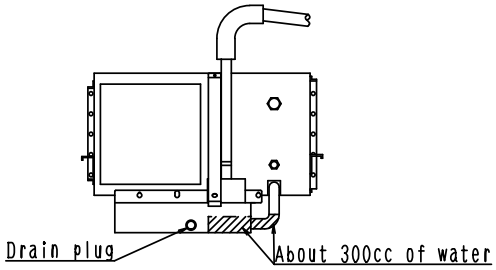

2. After removing the access hole covers, remove the dirt around the access holes. See the figure below.
3. After the unit is cleaned, put the covers back to their places.

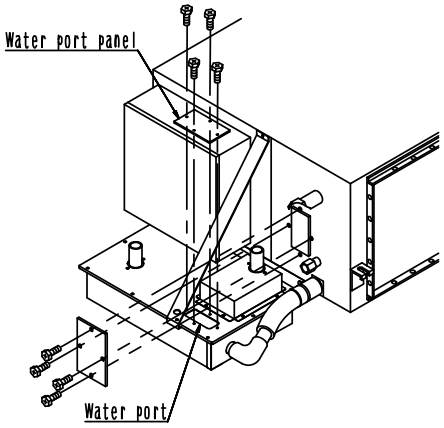

6 Post-installation checks

After installing the equipment, make the following checks.

Items to be checked	Check
That the indoor unit and drain pump are level.	
That the drain hose is properly connected (No fear of water leaks).	
That the drain hose is sloping downward (1/50~1/100 gradient).	
That the drain hose is properly insulated.	
That wiring is correct.	

C: 3K010505A

- Caution for Use
  The bottom surface of this kit should be located at a level 120 mm lower than the bottom surface of the indoor unit. Therefore, arm space/length at the ceiling should be higher/longer by at least 120 mm than the standard dimension.

11. FXH(Q) — Ceiling Mounted Suspended Type

11.1 KAF501DA56 / 80 / 112 — Replacement Long-life Filter

KAF501DA56

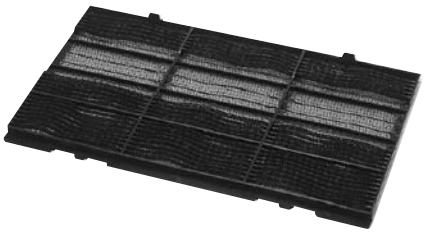

Caution

· Can be water-washed. Can be reused.

Dimensions Unit (mm)

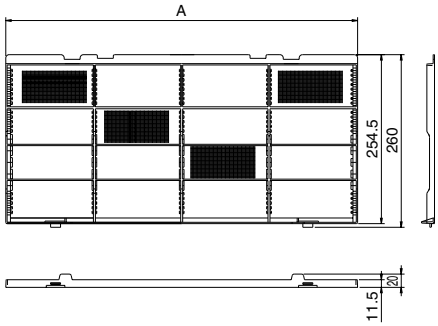

Model	A
KAF501DA56	430
KAF501DA80	530
KAF501DA112	430
KAF501DA160	493

Item \ Model		KAF501DA56	KAF501DA80	KAF501DA112	KAF501DA160
Initial pressure loss	Pa	10 or less			
Final pressure loss	Pa	59 or less			
Average efficiency	%	45 (gravity method)			
Airflow rate	m^3/min	13	17	24	32
	l/sec	217	283	400	533
Life	h	2,500 (dust concentration 0.15 mg/m^3)			
Filter element		Mildew-proof resin net			
Number of sheets included		2	2	3	3
Mass	kg	0.3	0.4	0.5	0.6

11.2 KDU50N60VE / KDU50N125VE — Drain-up Kit

KDU50N60VE
KDU50N125VE

Item		Model	KDU50N60VE	KDU50N125VE
Drain-up lift		mm	600	
Drain Con. diameter			VP20 (Ex. dia. ϕ26, Int. dia. ϕ20)	
Pump	Power supply		Single phase 220-240V/220V 50/60Hz (from Indoor Unit PCB)	
	Power consumption	W	13.5/12 (50/60Hz)	

Dimensions Unit (mm)

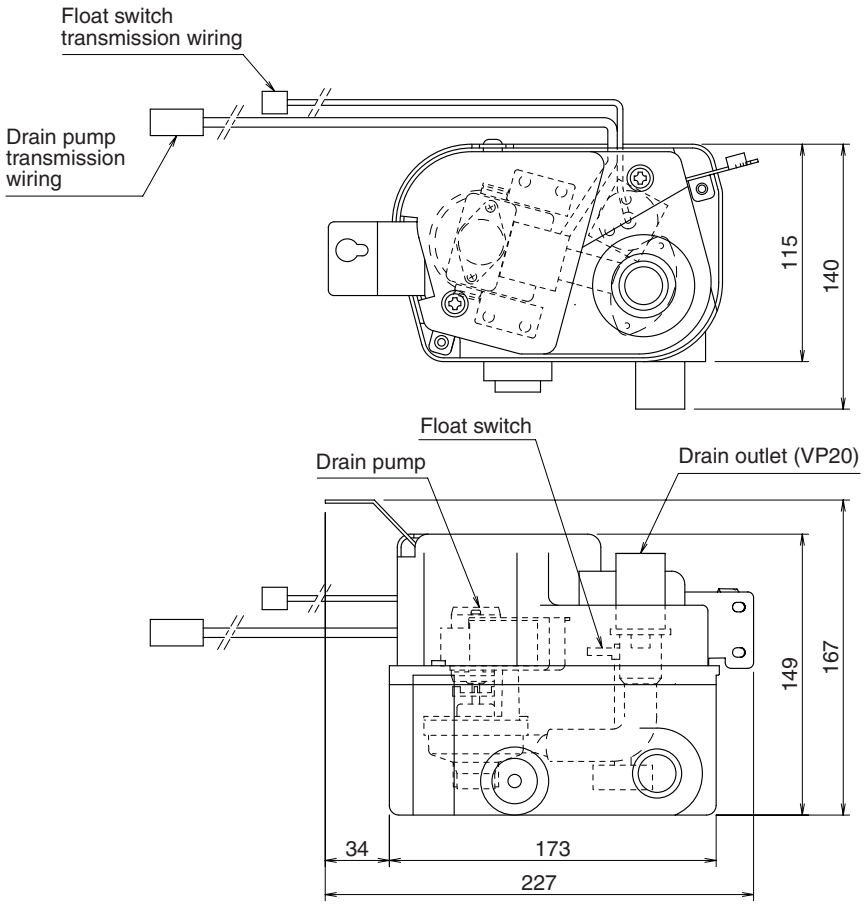

J: D3K03613B

Installation Manual

Perform all installation work accurately only after reading these precautions.

- The safety precautions provided in this manual are classified into two categories: "⚠WARNING",and "⚠CAUTION". Hazardous situations which may be caused by incorrect installations and could result in death or serious injury are described in the columns indicated with "⚠WARNING".
  However, even the items described in the columns indicated with "⚠CAUTION" could result in hazardous situations depending on the condition. Since these warnings and cautions are extremely important to secure safety, always observe them when performing the work.
- After completing installation, perform a test run to see if there is anything wrong.
  Also, explain to the customer how to use and maintain the unit, following the operation manual. Have the customer store this installation manual along with the operating manual.

⚠ WARNING

The installation should be performed only by the qualified installer.
Improper installation, if any, may cause water leakage, electrical shock, or fire.

Perform the installation work in accordance with the installation manual.
Improper installation may cause water leakage, electrical shock, or fire.

Use only the attached accessories and the specified parts for installation.
Otherwise it may cause water leakage, electrical shock, or fire.

Use the specified wires for all wiring, making sure that all terminal connections are fastened securely and free of external pressure. Defective connections or fastening may cause heat or fires.

⚠ CAUTION

Connect all pipes, observing the instructions in the installation manual, to ensure proper drainage. Make sure they are insulated to prevent condensation from forming. If the piping is done incorrectly drain may leak and damage furniture.

Do not install in the following locations.
1. Locations with mineral oil in the atmosphere, or food preparation areas where drops of oil or steam can reach the unit, as resin parts will deteriorate and may cause leaking or falling parts.
2. Locations where sulfurous gas or other corrosive gases are produced. Copper pipes or brazed areas may corrode, causing the refrigerant to leak.
3. Locations where there is machinery which gives off electromagnetic waves.This may cause the control system to malfunction, impeding proper functioning of the unit.
4. Locations where gas might leak into the atmosphere, or locations where thinner, gasoline, or other volatile or flammable substances are handled. An explosion could be caused by gas leaking and accumulating around the drain pump kit.

Caution

- This kit may be attached to a ceiling-hung air conditioner.
- Check the indoor unit main unit type on the list below before installing.
- When installing, also refer to installation manual for the indoor unit main unit.

Particular caution should be exercised for the following items.
Re-check all items after installation is completed.

Item to be checked	In case of malfunction	Check column
Has the installation of the indoor unit main unit and the drain up kit each been cone without fault?	Falling, condensation, shaking	
Are all wires connected without fault?	Inoperable, burning	
Is the drain flowing smoothly?	Leaking	

Drain up height

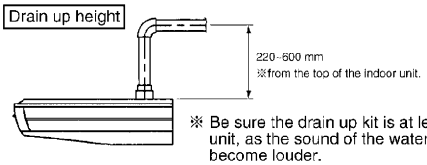

※ Be sure the drain up kit is at least 220 mm above the unit, as the sound of the water flowing may otherwise become louder.

Parts

Name		① Drain up kit main unit	② Drain hose	③ Hose band	④ Screw (M4)	⑤ Clamp material	⑥ attached pipes					⑦ Insulation pipe cover					⑧ Insulating material		
							(For liquid piping)		(For gas piping)			(Large)	(Medium)		(Small)		⑧-1 For attached pipes	⑧-2 For indoor drain hose	⑧-3 For the drain hose connections
							For φ6.5	For φ9.5	For φ9.5	For φ12.7	For φ15.9	I.D φ42 X L100	I.D φ32 X L100	I.D φ25 X L100	I.D φ26 X L80	I.D φ32 X L80			
Shape		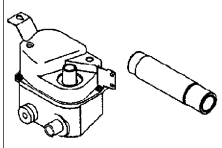					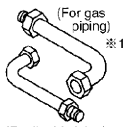 (For gas piping) ※1 (For liquid piping)					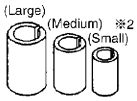 (Large) (Medium) ※2 (Small)					(For gas piping) 200×50×t5 (For liquid piping) 200×30×t5	185×230×t5	170×30×t10
Q'ty	KDU50N60VE	1	2	3	3	12	1		1	1		1	1	1	1		1	1	1
	KDU50N125VE	1	2	3	3	12		1			1	1		1		1	1	1	1

※1. KDU50N60VE: Two types of gas pipes are attached.
2. KDU50N60VE: Two types of Insulation covers (medium) are attached.

Tools required for installation

⊕⊖ Flathead screwdriver, nipper, cutter

Precaution when installing

Install the indoor unit level or slightly tilted to the right or back (within 1°) (Figure 1)

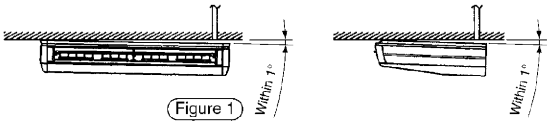

Figure 1

C: 3K012642A

1 Preparations before hanging the indoor unit

The drain up kit is installed after the air conditioner main unit is hung. Preparations are required before hanging the air conditioner.

Mounting space

Select the place for the indoor unit to be installed in consideration of the installation service space.
Note, however, that there must be at least 60 mm of service space to the right of the indoor unit main unit.
See the installation manual attached to the indoor unit for the service space for the indoor unit. (Figure 2)

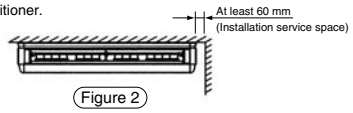

Figure 2

(1) Select the position of the pipe outtake, the drain pipe outtake, and the wiring outtake, and make holes in those positions.
The locations are displayed on the installation pattern paper attached to the indoor unit, so use the paper pattern. (Figure 3)
(2) Perform the refrigerant and drain piping work following the installation manual attached to the indoor unit.
Field drain piping should be as short as possible and with a downward slope (1/25 – 1/100) to prevent air pockets. (Figure 4)
Be sure to insulate all drainpipes which run above the ceiling.
Be sure to fix the field drain pipe to the support brackets in the ceiling. (Figure 4)
(3) Connect the attached piping ⑥ and the field refrigerant piping.
For the attached pipes ⑥, select the liquid and gas pipes which match the pipe diameters of the corresponding indoor unit.
When connecting the flare nuts, refer to the installation manual attached to the indoor unit.
(4) Wrap the insulation pipe cover attached to the indoor unit and fasten with the clamp material ⑤. (For both gas and liquid pipes.) (Figure 5)
(5) Be sure to use adhesive when connecting the attached drain hose ② and the field drain piping in the ceiling. (Figure 4)
(6) Insulate the drain hose using the attached insulation pipe cover(large) ⑦. (Figure 6)

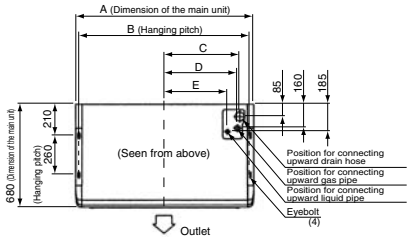

Model	A	B	C	D	E
FHQ35/50BVV1B, FXHQ32MAVE	960	920	390	375	310
FHQ60BVV1B, FXHQ63MAVE	1160	1120	490	475	410
FHQ100BVV1B, FXHQ100MAVE	1400	1360	610	595	530
FHQ125BVV1B	1590	1550	800	785	720

Figure 3

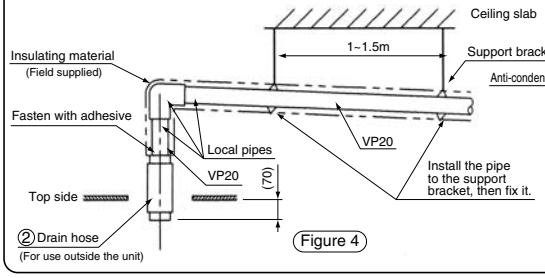

Figure 4

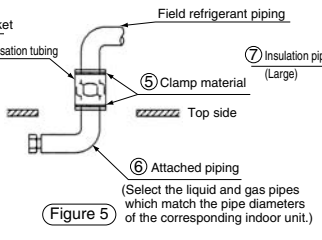

Figure 5

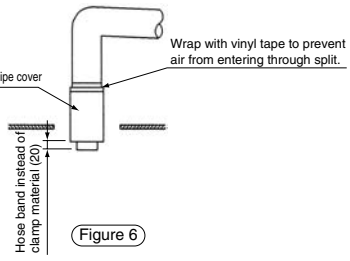

Figure 6

2 Installation Outline

Remove the lid from the top of the indoor unit, and hang the indoor unit main unit before installing the drain up kit in the following manner. (Figure 7)
1. Complete the electrical wiring following the installation manual attached to the indoor unit.
(Use the wiring through-hole in the top side of the indoor unit to pull the wiring into the indoor unit main unit.)
2. Connect the refrigerant piping to the indoor unit.
(1) Connect the liquid and gas piping to the indoor unit main unit. (Figure 8)

(2) Wrap the piping connections with the attached insulation pipe cover (medium and small) ⑦ and fasten either end with the attached clamp material ⑤.
Next, put the attached insulating material ⑥-1. Wrap gas-side piping with the insulating material attached the indoor unit on top of the insulation pipe cover wrapped on the piping connections. (For the KDU50M60VE, there are two types of Insulation pipe covers (medium) for the gas pipe connection. Select the one appropriate for the piping size.)

Also, pass the lead wires of swing motor and thermistor through the clamp section of the top lid and fix it so they are as they were before removing the topside through lid.
In order to prevent dust from entering the indoor unit, block any crevices between the lid and the pipes with putty.

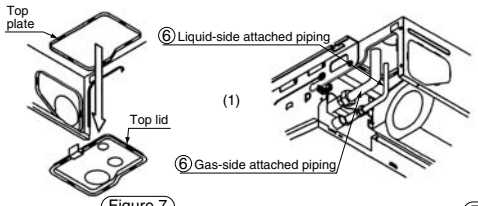

Figure 7

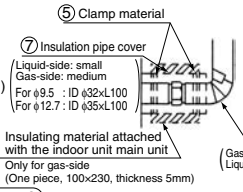

Figure 8

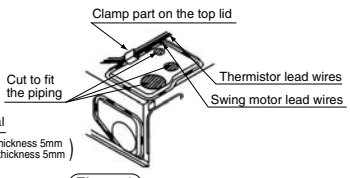

Figure 9

3. Mount the drain up kit to the indoor unit.
(1) Remove the screws from the top of the indoor unit, and insert the attached screws ④ temporarily. Next, temporarily put the screwed clamps on either end of the drain up kit, and tighten the screws. (Figure 10)
Take out the lead wires of drain pump and the float switch from the back of the drain up kit.
Wire the local wiring as shown in (Figure 11).

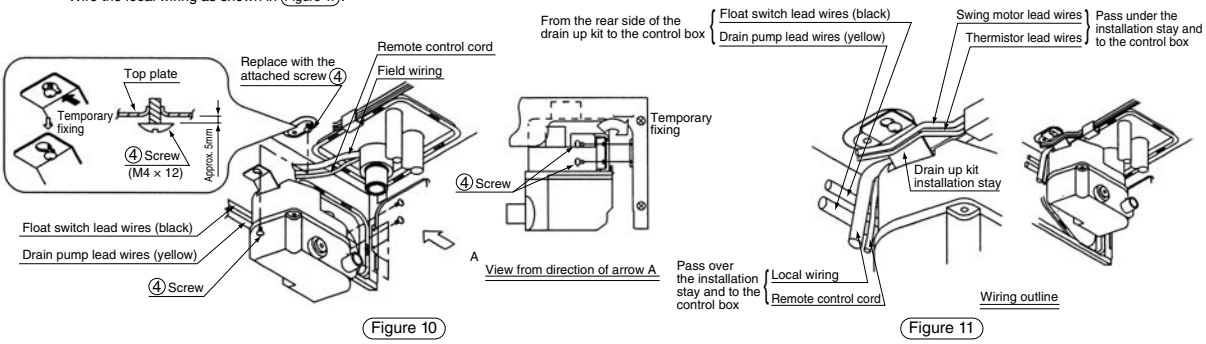

Figure 10 Figure 11

C: 3K012642A

(2) Insert the hose band ③ into the external drain hose, firmly insert the drain hose all the way into the drain socket in the drain up kit, and wrap it firmly with the hose band ③ within the area designated by the black tape on the hose end. (Figure 12)
(3) Put the attached insulating material ⑧-③ to the external drain hose connector, as shown in (Figure 13).
(4) Connect the indoor unit drain socket and the drain up kit drain socket with the attached drain hose ② inserting it all the way in, and wrap it firmly with the hose band ③ within the area designated by the black tape on the hose end. Make sure the hose band connector comes to the top, as in (Figure 15). (Figure 14)
(5) Insulate the drain hose ② fixed by the procedure (4) using the attached insulating material ⑧-②. Wrap the entire surface over the hose band on the drain hose. (Figure 16)

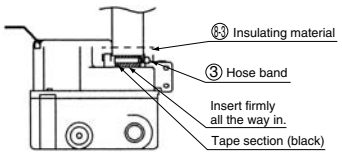

Figure 12

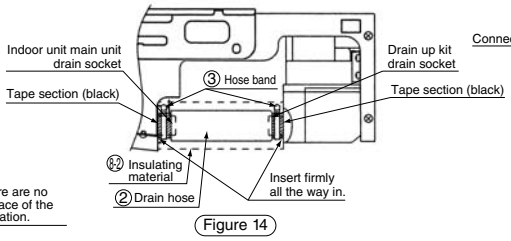

Figure 14

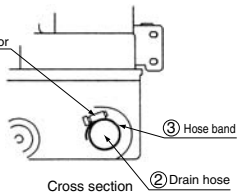

Figure 15

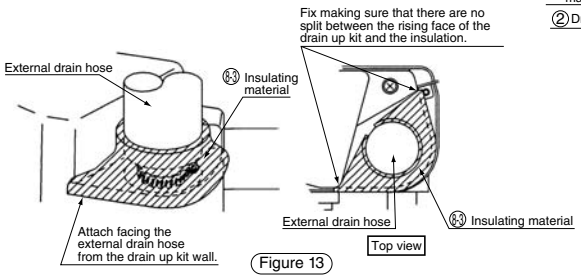

Figure 13

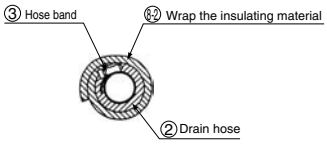

Figure 16

❸ Electrical wiring

· Wire the float switch lead wires (black), coming out of the drain up kit, and the drain pump lead wires (yellow) in the manner described below. (Removing the control box makes wiring work easier.) When doing wiring work, be sure to shut off the power. (Figure 17)

· Refer also to the "Electric Wiring Diagram Plate" when performing wiring work. (It can be found on the control box lid.)
(1) Remove the control box from the indoor unit.
(2) Connect the drain pump lead wires (yellow) to X25A (the white connector) on the indoor unit PC board assembly.
(3) The connector on the PC board assembly to which the float switch lead wires (black) must be connected differs depending on the indoor unit series (SkyAir or *VRV* Air Conditioner).
(SkyAir) : Remove the short circuit connector connected to X15A (a green connector), and connect the float switch lead wires.
(*VRV* Air Conditioner) : Remove the short circuit connector connected to X8A (a green connector), and connect the float switch lead wires.
(4) After all the wires are connected, arrange them, pass the float switch lead wire (black) through the clamping material, and secure it together with the drain pump lead wire (yellow) from above the wiring inside the indoor unit using the included clamping material ⑤.
(5) Store and secure any extra lead wire with the included clamping material ⑤, so that the lid is not pushed up. Attach the control box securely.

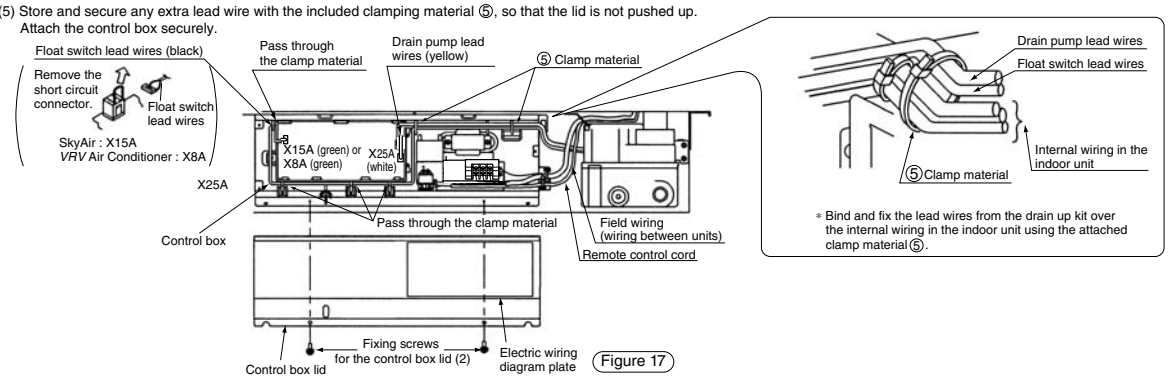

Figure 17

❹ Installing the decorative panels and suction grill

· Refer to the installation manual for the indoor unit and mount the decorative panels and suction grill firmly following the procedure in the opposite way of removing.

C: 3K012643

5 Test Run Procedure

In order to determine the condition of the drainage, slowly pour approximately 1500 ml of water into the unit from the air outlet. Follow the procedure below to check the drainage. (Figure 18)
The test run procedure differs depending on the indoor unit series (SkyAir or *VRV* Air Conditioner), so follow the appropriate procedure below.

SkyAir

If the wiring work is complete
- Check the drainage while operating in cooling mode.

If the wiring work is not complete
- Remove the control box lid, connect a single-phase power supply (50/60Hz 220-240V) to No. 1 and No. 2 (in the power supply terminal block), and then for safety's sake, close the lid before turning the power on. (Figure 19)
- Only the drain pump will run automatically for 10 minutes, so during this time make sure water is draining out.
- Once the drain check is complete, remove the power wires and replace the control box lid as it was.

⚠
- Do not connect anything to No. 3 in the power supply terminal block (the drain pump will not operate.)
- Do not touch the electrical part, emergency switch. The drain check described above can be performed without moving the emergency switch.

***VRV* Air Conditioner**

If the wiring work is complete
- Check the drainage while operating in cooling mode.

If the wiring work is not complete
- Remove the control box lid and connect the remote control and the single-phase power source (50/60Hz 220-240V/220V) to the remote control terminal block (P_1, P_2) and the power supply terminal block (L, N).
- Next, switch the unit to test run mode from the remote control, press the mode switch button to select "fan", and then press the start/stop button to start the indoor fan and the drain pump. Check the drainage.
- Take precaution, because the fan will operate as well.

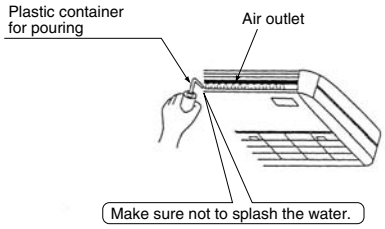

Figure 18

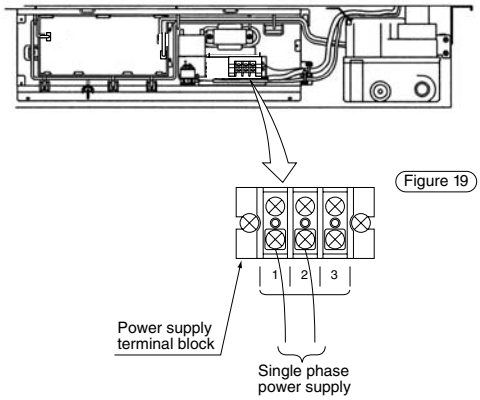

Figure 19

C: 3K012643

11.3 KDU50B50 / 71 / 125VE — Drain Pump Kit

Dimensions Unit (mm)

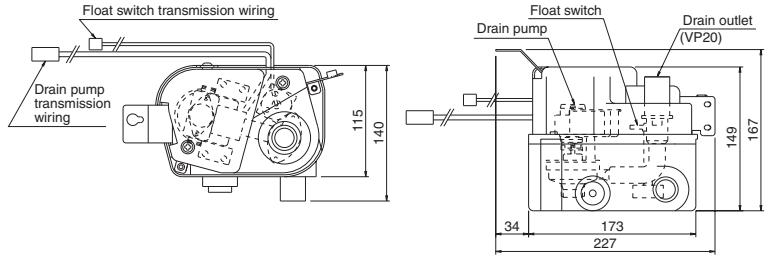

C: D3K3138A

Specifications

Items		Model	KDU50B50VE	KDU50B71VE	KDU50B125VE
Drain-up Lift		mm	600		
Drain Con. diameter			VP20 (Ex. dia. ϕ26, Int. dia. ϕ20)		
Pump	Power supply		Single phase 220-240V/220V 50/60Hz (from Indoor Unit PC Board)		
	Power consumption	W	13.5/12 (50/60Hz)		

Precaution at use

1. Don't turn off the power within 5 minutes after cooling operation stops.
2. The liquid crystal display blinks to inform us that safety device actuated.
3. When cooling operation's season is over, extract drain water.

Installation guide of the drain pump kit

<Changes in drain pump kit>

- Exit drain pipe has been changed from VP25 to VP20 (to meet the drain diameter of main frame).
- Attached drain pipe (450 mm chloride vinyl straight pipe bellow, elbow) -> only bellow hose for VP20
- All units of drain up height was unified to 600mm (From the bottom of the ceiling)

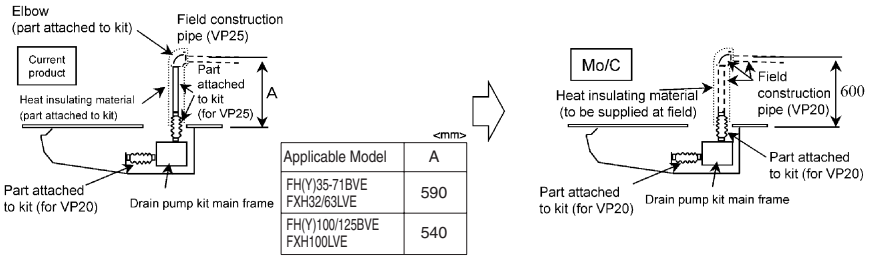

<mm>

Applicable Model	A
FH(Y)35-71BVE FXH32/63LVE	590
FH(Y)100/125BVE FXH100LVE	540

Wiring diagram

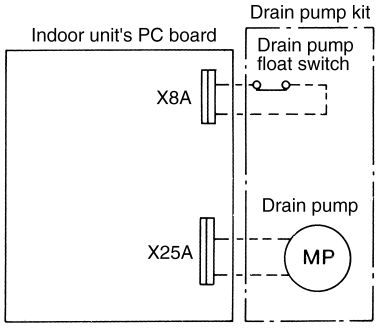

Remove the X8A short circuit connector when the float switch will be connected.

11.4 KHFP5MA63 / 160 — L-type Piping Kit (for Upward Direction)

KHFP5MA35

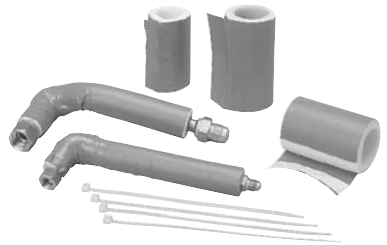

When you install the refrigerant piping in the ceiling, the piping is required to be bent L-type in the unit as shown on the right. This L-type piping kit is developed to facilitate such installation.

Installation

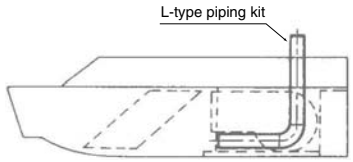

Dimensions Unit (mm)

KHFP5MA35

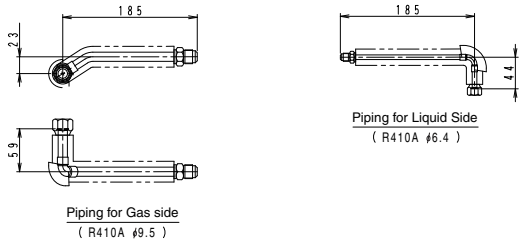

KHFP5MA63

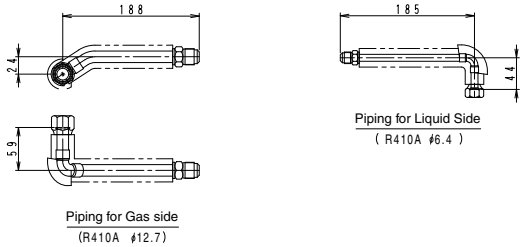

KHFP5MA160

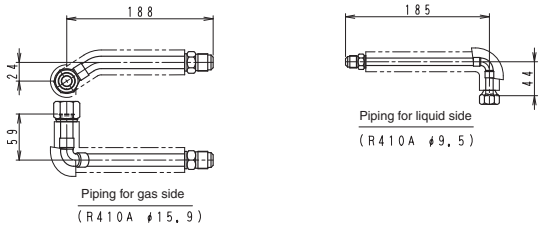

J: D3K03612B

Model / Item	KHFP5MA35	KHFP5MA63	KHFP5MA160
Accessories	Installation for fitting: 1 set Clamp material: 4 pieces		

11.5 KHFJ5F50 / 80 / 160 — L-Type Piping Kit (for Upward Direction)

KHFJ5F50

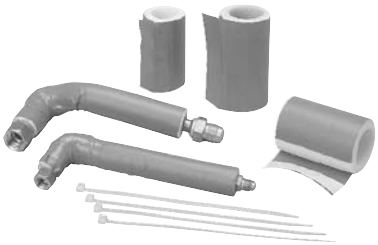

When you install the refrigerant piping in the ceiling, the piping is required to be bent L-type in the unit as shown on the right. This L-type piping kit is developed to facilitate such installation.

Installation

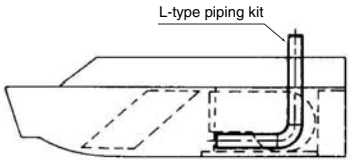

Dimensions Unit (mm)

KHFJ5F50

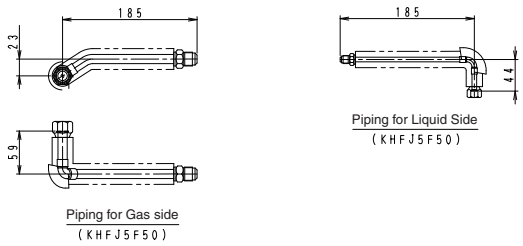

KHFJ5F80

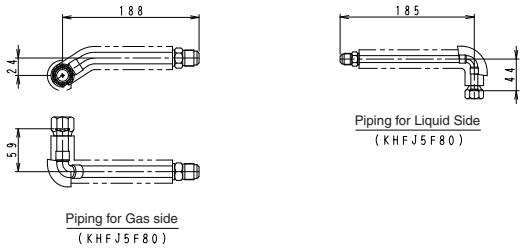

KHFJ5F160

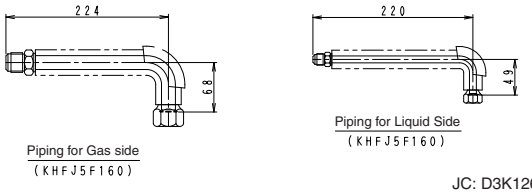

JC: D3K1267

12. FXA (Q) — Wall Mounted Type

12.1 K-KDU572EVE (Supplying goods to order) — Drain Pump Kit

Operating sound as small as 25dB

Features

1. Silent operation with no sign of pump operation
2. Design matching with wall mounted type air conditioner
3. Can be interlocked with air conditioner.

Usage

- **Home, office, and store**
- **Optimum for redesign**

Caution :
- Drain pump kit is only for the air conditioner. Please use it for the drain treatment of the air conditioner.
- Be sure to lay the piping inclined down after drain-up, which is different from drain pump.
- Please do not use it in the place where soot such as kitchens is shrouded and the place where an organic solvent drifts.

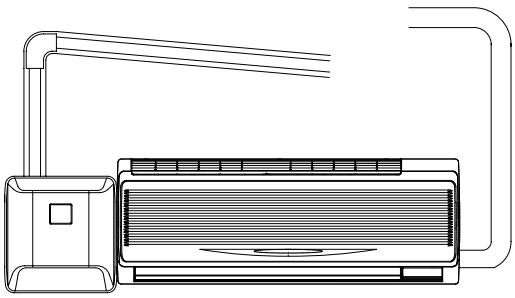

Dimensions Unit (mm)

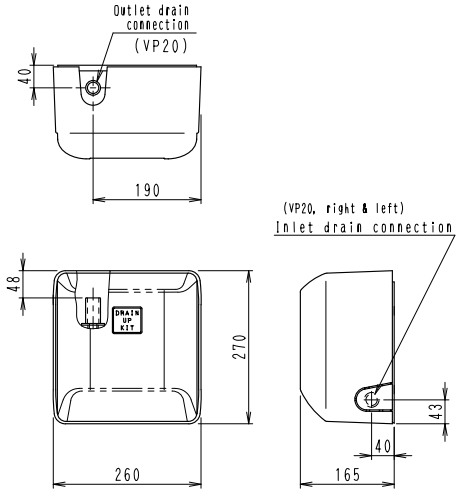

JC: D3K06160
JC: D3K06161

Specification

		K-KDU572EVE
Drain pump head (Note 1)	mm	1,000
Power supply		Single phase 220-240/220V, 50/60Hz
Power consumption	W	14.1/12.9
Operating current	A	0.18/0.16
Insulation		Class E
Drain inlet connection pipe diameter		VP20 (Note 2)
Drain exit connection pipe diameter		VP20
Safety device		Float switch
Operating sound	dB	25
Mass	kg	3.2
Drain exhaust flow rate	mℓ/min	400

Note: 1. Height from bottom of drain pump kit up to the drain pipe.
2. Connect to the VP13 using the soft reducing socket.

Wiring Diagram

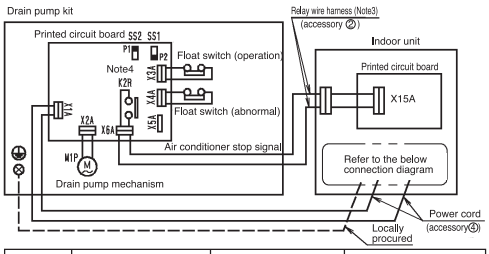

Application model	FAY71LVE FAYP71LV1	FXAQ20-63MAVE FXAQ20-63PVE FXA20-32LVE(C) FXA40-63LVE	FAQ71BUV1B FAQ71BVV1B
Connection diagram	X2M Tes2 ⏚ 1 2 3	X2M ⏚ L N	X2M ⏚ 1 2 3

The earth wire (copper) should be at least 2.0mm² or φ1.6mm.
When the relay wire harness is connected, remove the X15A short-circuit connector.

Note: 1. Don't forget to turn on the power. If it is not turned on, the air conditioner will perform an error stop and operation will not be possible.
2. Make sure that slide switch SS1 on the drain pump kit printed circuit board assembly is set to P2 and slide switch SS2 is set to P1.
3. The relay wire harness cannot be extended.
4. Turning on the power will close the K2R connector, making is a non-volt B connector.

Component Parts

Name	Shape	Quantity	Name	Shape	Quantity	Name	Shape	Quantity
Drain Pump Kit	①	1	Insulation	⑦ 50X300Xt10	1	Rigid polyvinyl chloride pipe (Note3)	⑬ VP13 365	1
Relay wire harness	② (Green) (Red)	1	Clamp	⑧	2	Soft drain pipe	⑭ VP20 200	1
Connecting harness	③ (White)	1	Clamp	⑨	1	Screw Washer	⑮ (White)	1
Power cord	④ (Blue)	1	Soft reducing socket	⑩ VP13	1	Screw	⑯ M5X35	5
Insulation pipe cover	⑤	1	Drain hose	⑪ 150	1	Clamp material	⑰	4
Insulation	⑥ 90X300Xt2	1	Rigid polyvinyl chloride pipe joint	⑫ VP13 57	1	Paper pattern for Installation	⑱	1
						Installation Manual	⑲	2

Note 3: This pipe must be procured locally for the large capacity machine.

External drawing of drain pump kit and Service space

Unit (mm)

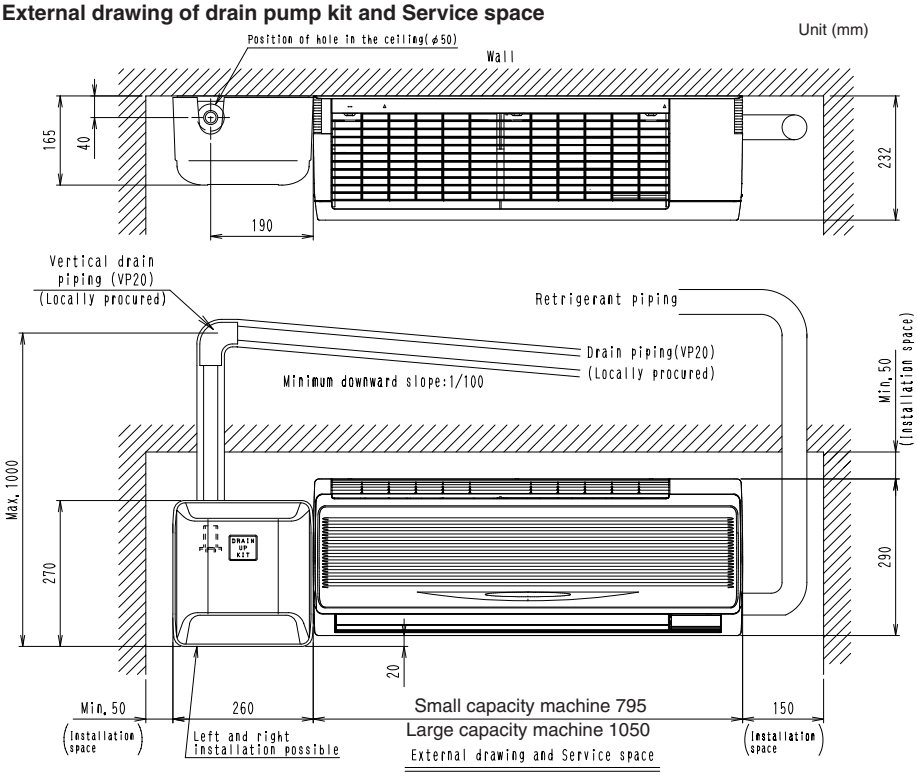

Note: 1. Drain pump kit must be fixed to the wall.
2. This drawing shows left installation , can be installed right of the air conditioner.
3. Installation space and service space must be kept on this drawing.

3K019617A

When using centralized piping

- Follow the figure below to make sure there is absolutely no back-up when using centralized piping.

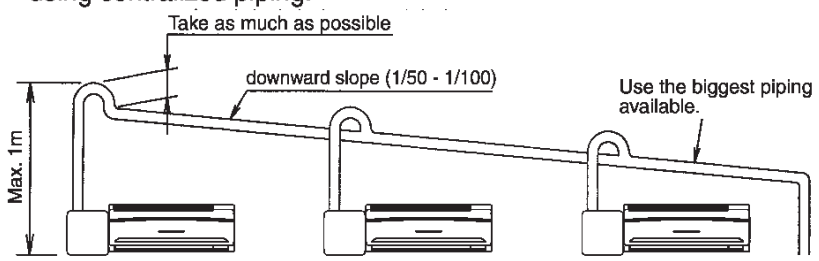

3K019618A

Maintenance and inspection

Inspect the equipment once a year before operating the air conditioner for cooling.

Item	Inspection
Drain pump mechanism	Check for clogging, dirtiness and drainage. (If clogged or dirty, clean.)
Drain pan	Check for dirtiness. (If dirty, clean.)
Float switch	Check float operation. (If the float is dirty, clean.)

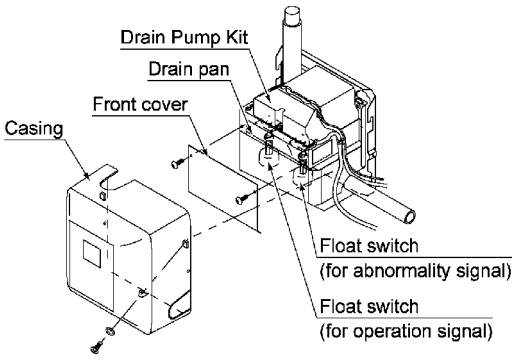

⚠Caution • Request your dealer to conduct maintenance and inspection.

Explanation of operation

(1) Drain pump kit operates as follows when water level is normal
(Drain pump kit operates when water level is at Run level. If water level reaches Stop level, residual operation is conducted for 20 minutes.)

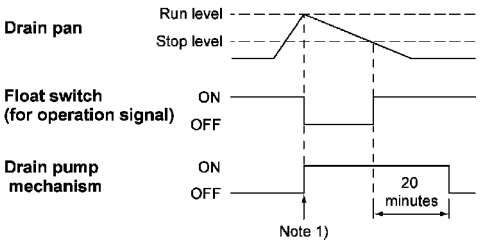

Note 1) If the float switch is OFF (activated) for 5 seconds or more, the drain pump mechanism starts operation.

(2) Drain pump kit operates as follows when water level is abnormal
(The drain pump kit outputs an air conditioner stop signal in the event of a water level abnormality.)

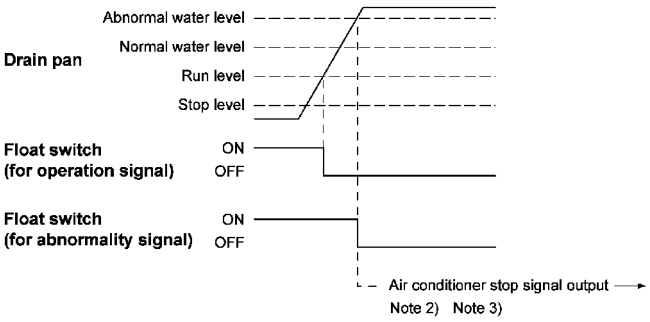

Note 2) Wait for about 5 minutes after the drain pump kit outputs the air conditioner stop signal, then check to make sure that the air conditioner has stopped operating.

Note 3) To restart the air conditioner after water level abnormality is determined, it is necessary to turn off the drain pump kit and turn it on again, and then use the remote control to operate the air conditioner.

3K023710

1 Pre-installation preparations

● See the indoor unit's installation manual for indoor unit work.

Drain pump kit preparations

● Remove the casing and the drain pump kit from the mounting plate.

1. Remove the casing fixed screw and pull the casing down and forward.
2. Remove 2 Screws of the drain pump kit and lift the drain pump kit out.

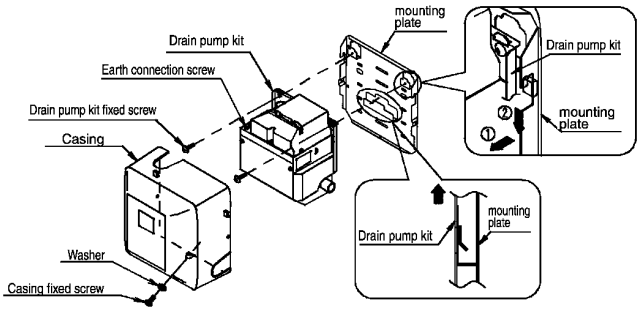

2 Indoor unit preparations

● Make sure the indoor unit is installed first.

1. Attaching of the indoor unit mounting plate
   After installing the mounting plate following the directions in the indoor unit, make sure it is plainness using a level.
2. Decide the left and the right piping extraction direction and cut off the exit hole for the piping on the bottom frame by the cutter etc.
3. Connecting the drain hose

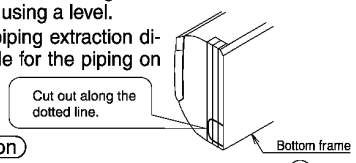

In the case of a left installation

1. Connect the rigid polyvinyl chloride pipe joint (accessory ⑫) to the indoor unit drain hose using adhesive.
2. Connect the rigid polyvinyl chloride pipe (accessory ⑬ for small capacity machine. Local procurement for the large capacity) to the rigid polyvinyl chloride pipe joint (accessory ⑫) using adhesive.

In the case of a right installation

1. Remove the drain hose connected to the indoor unit and replace with a drain plug and insulation tube.
2. The drain hose removed from the indoor unit is attached to left side.
3. Connect the rigid polyvinyl chloride pipe joint (accessory ⑫) to the indoor unit drain hose using adhesive.
4. Connect the rigid polyvinyl chloride pipe (accessory ⑬ for small capacity machine. Local procurement for the large capacity) to the rigid polyvinyl chloride pipe joint (accessory ⑫) using adhesive.

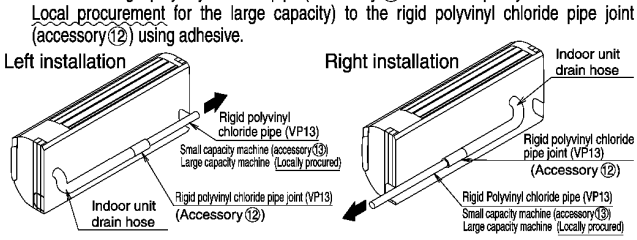

Replacing the drain plug

① Remove the drain plug and the insulation tube.
② Remove the standard drain hose.
(If only the drain hose (accessory ⑪) is used, the standard drain hose is not used for the connection of the drain pump kit.)
③ Replace the drain plug and the insulation tube onto the right side.

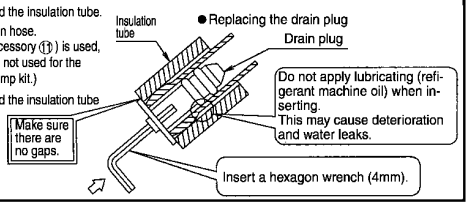

When using the drain hose (accessory ⑪)

① Remove the indoor unit drain hose and attach the drain hose (accessory ⑪).
② Connect the rigid polyvinyl chloride pipe (accessory ⑬) to the drain hose (accessory ⑪) using adhesive.

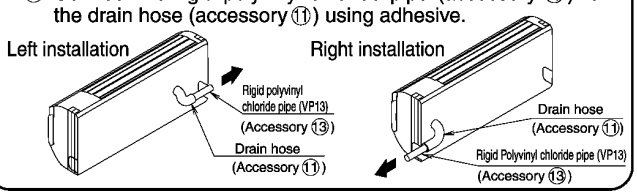

3K019617A

❸ Installing the mounting plate

1. Install the indoor unit.
2. Cut out the indoor unit section from the paper pattern for installation (accessory ⑱) and attach to the installation position on the indoor unit.

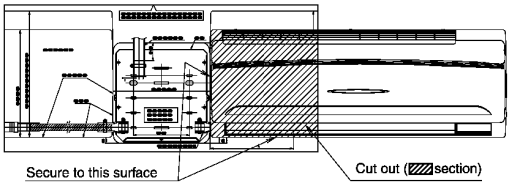

3. Cut the rigid polyvinyl chloride pipe (accessory ⑬) attached to the indoor unit to the length indicated on the paper pattern for installation.

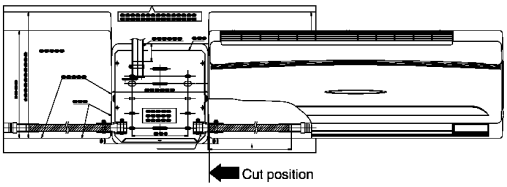

4. Determine the position to secure the mounting plate for the drain pump kit by matching to the paper pattern for installation. Remove the paper pattern for install once this is done.
   - If using screws (accessory ⑯), fix it at least 4 positions.
   - For concrete, attach it using commercially available anchors (M8) and bolts.

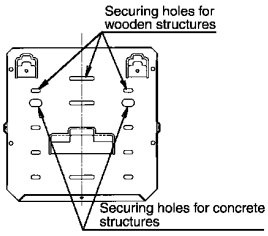

5. Attach the drain pump kit to the mounting plate and squeeze in the fixed screws.
6. Remove the circuit board cover.

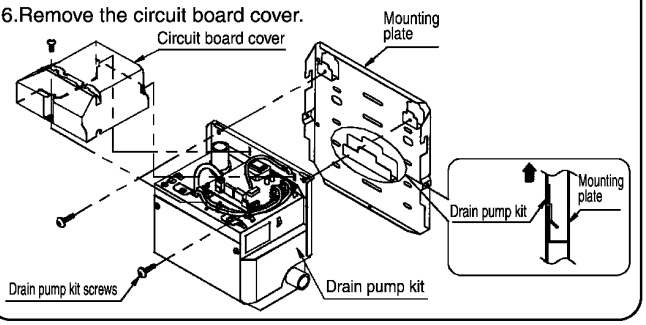

❹ Attaching the relay wire harness, the connection harness, and the power cord.

⚠Caution Only connect after shutting off the power.

< Precautions when laying power and earth wiring >

Use ring type crimp style terminals for connections to the inter-unit wiring terminal block and the earth wiring. When none are available, follow the instructions below.

- Do not connect wiring of different thicknesses to the inter-unit wiring terminal block. (Looseness in the terminal may cause abnormal heat.)
- For wiring, use the designated power wire and connect firmly, then secure to prevent outside pressure being exerted on the terminal board.
- Use an appropriate screwdriver for tightening the terminal screws. A screwdriver with a small head will strip the head and make proper tightening impossible.
- Over-tightening the terminal screws may break them.
- See the table at right for tightening torque for the terminal screws.

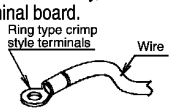

Tightening torque(N·m)	
Inter-unit wiring terminal block	1.18 ~ 1.44
earth terminal	1.44 ~ 1.94

For the FAY71LVE, FAYP71LV1, FXA20·25·32LVE(C)
FXA40·50·63LVE, FXAQ20·25·32·40·50·63M(A)VE
FXAQ20·25·32·40·50·63PV1
FXAQ20·25·32·40·50·63PVE

- Connect the relay wire harness (accessory ②) and the power cord (accessory ④) to the indoor unit.

1. Remove the front grill according to the instruction manual that came with the indoor unit.

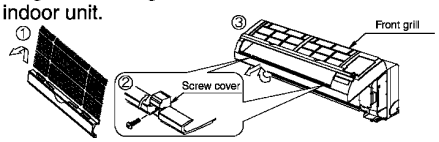

C: 3K019617A

2. Remove the service lid.

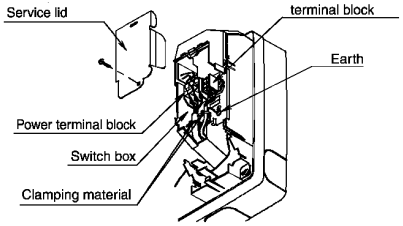

3. Remove the indoor circuit board assembly CN15 short-circuit connector and connect the relay wire harness (accessory②) connector.

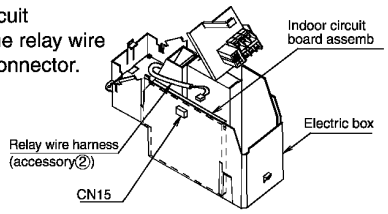

4. Connect the power cord (accessory④) to the indoor unit inter-unit wiring terminal block.
   - The terminal nos. of connection terminals vary depending on models. Be sure to check the electrical wiring diagram on the back side when connecting wires.
   - When connecting the terminal to the inter-unit wiring terminal block, make sure it is attached properly, as shown below.
     If the pressure terminals are mistakenly attached in the same direction, the surface of the terminal that is touching will be reduced, causing heat and perhaps burn damage.

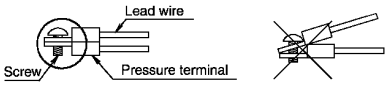

5. Connect the earth wire (locally procured-copper wire at least 2mm²) between the unit and the drain up kit with the earth connection screw for the indoor unit.

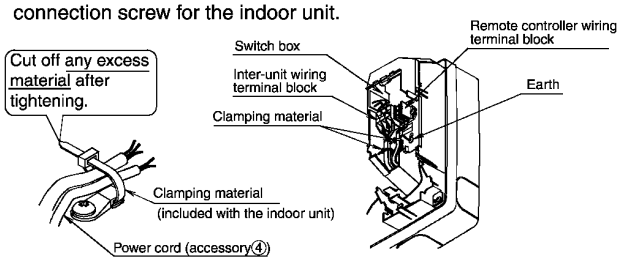

For the FAQ71BUV1B , FAQ71BVV1B , FAQ71·100CVEB

- Connect the relay wire harness (accessory②), the connecting harness (accessory③) , and the power cord (accessory④) to the indoor unit.

1. Remove the connecting harness on the relay wire harness (accessory②) and connect the included connecting harness (accessory③).

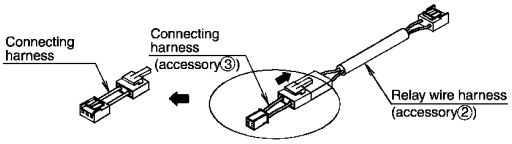

2.How to remove a front panel and the service lid according to the indoor unit installation manual.

[Removing the front panel and service lid]

(1)Open the front panel as far as it stops.

(2)Push the axes on either side of the front panel towards the center of the main unit and remove.
(You can also remove it by sliding the front panel either to the left or right and pulling it forward.)

(3)Remove the screws from the service lid and pull the handle forward.

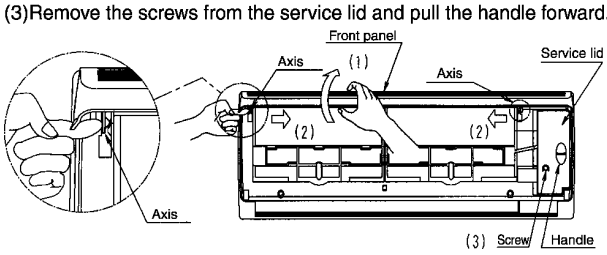

C: 3K019617A

(4) Remove the front grill by following the directions described in the installation manual for the indoor unit. In the case of FAQ100CVEB, remove the grill retaining fixtures.

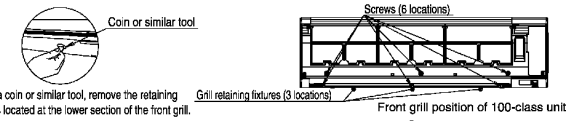

3.Remove the indoor unit printed circuit board X15A Shorting connector and connect the relay wire harness (accessory②) connector.

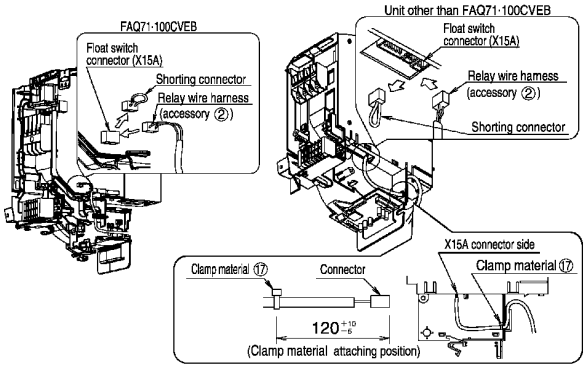

4.Connect the power cord (accessory ④) to the indoor unit inter-unit wiring terminal block.

- The terminal nos. of connection terminals vary depending on models. Be sure to check the electrical wiring diagram when connecting wires.
- When connecting the terminal to the inter-unit wiring terminal block, make sure it is attached properly, as shown below. If the crimp styl terminals are mistakenly attached in the same direction, the surface of the terminal that is touching will be reduced, causing heat and perhaps burn damage.

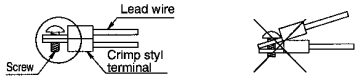

5.Connect the earth wire (locally procured - copper wire at least 2mm²) between the indoor unit and the drain pump kit with the ground connection screw for the indoor unit.
Be sure to perform earthing.

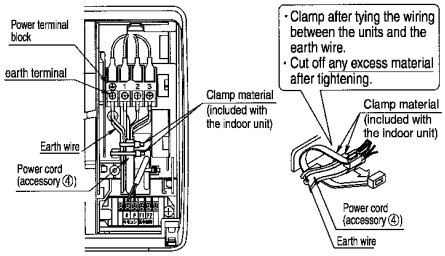

❺ Passing the wire through

1.See the figure below for how to pass the wire through.
The relay wire harness, power cord and earth wire should be matched to the space inside the indoor unit.

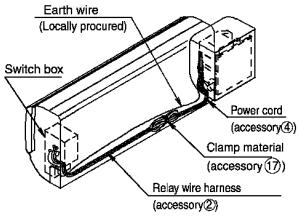

2. Connect the relay wire harness (accessory ②) to the drain pump kit circuit board assembly connector (X6A).
3. Connect the power cord (accessory ④) to the drain pump kit circuit board assembly connector (X1A).
4. Secure the earth wire (locally procured-copper wire at least 2mm²) to the drain pump kit using the earth connection screw.
5. Tighten the relay wire harness (accessory ②) using the clamping material.
6. Make sure that slide switch SS1 on the drain pump kit printed circuit board is set to P2 and slide switch SS2 is set to P1.
7. Attach the circuit board cover.
8. Tighten the relay wire harness (accessory ②), power cord (accessory④), and earth wire (locally procured) using the clamping material.
9. Bundle excess relay wire harness (accessory ②) using the clamping material (accessory⑰) and store away.
10. Connect the earth wire.

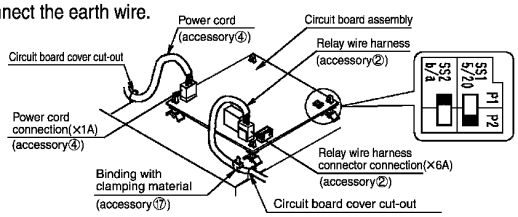

3K019618A

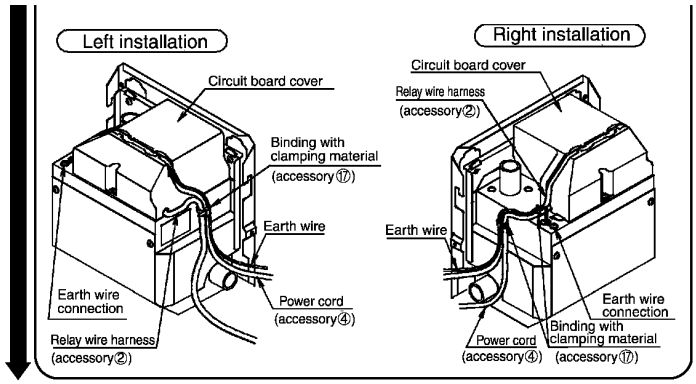

⑥ Installing the drain pump kit and drain piping.

1.When installing the drain pump kit to the right, transfer the drain plug and the insulating tubing from the left to the right.

- When performing a left installation, there is no need to transfer these items.

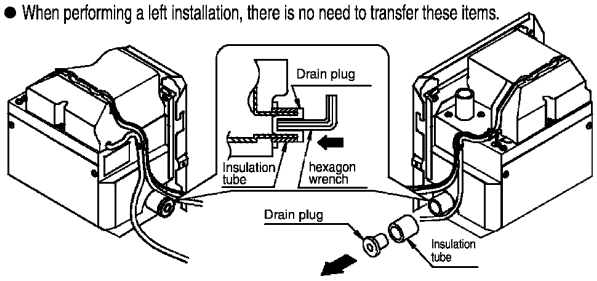

2.Insert the clamp (accessory ⑨) and the soft reducing socket (accessory ⑩) into the indoor unit the rigid polyvinyl chloride pipe (accessory ⑬), then match the position and tighten up the clamp to match the length of the drain pump kit drain pan socket.

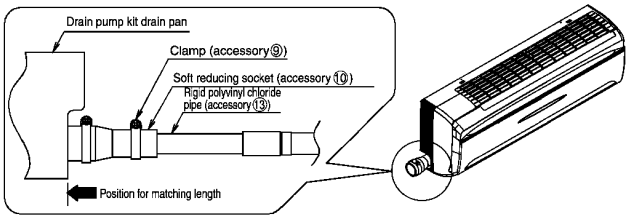

3. Matching the dimensions of the area required, cut the right length of insulation (accessory ⑥) for the drain hose rigid polyvinyl chloride pipe section and attach.

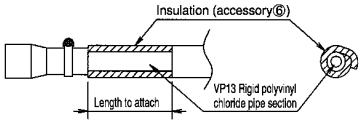

4. Insert the insulation pipe cover (accessory ⑤) as far into the drain hose as it can go.

- There is a slit in one side of the insulation pipe cover. Position the slit side to the drain pump kit.
- Cut the insulation pipe cover to match the length of the drain hose.

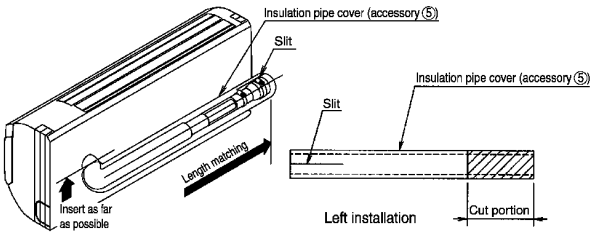

5.Insert the clamp (accessory ⑧) and the soft reducing socket (accessory ⑩) into the drain pump kit drain socket and tighten it.

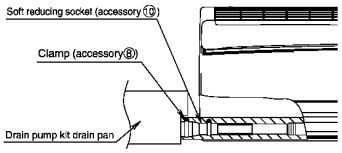

6.Secure the insulation tubing and power line with tape.

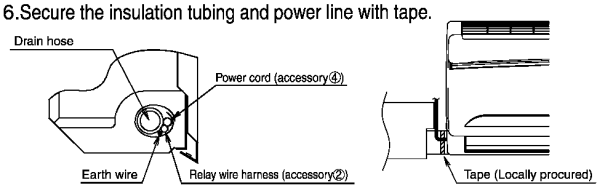

3K019618A

7.Connect the exit pipe.

- Be sure to use adhesive to connect the soft drain pipe (accessory ⑭) and the ceiling-side locally-procured the drain pipe.
- Connections on the drain pump kit should be secured with a clamp (accessory ⑧) and wrapped with insulation (accessory ⑦).

⚠Caution
- Exit piping parts must be procured locally.
- Be sure to insulate the drain piping.
- Give the horizontal sections on the drain piping a downward slope of at least 1/100 and make sure no air bubbles accumulate.
- Secure long horizontal sections with support clamps to prevent them from shaking.

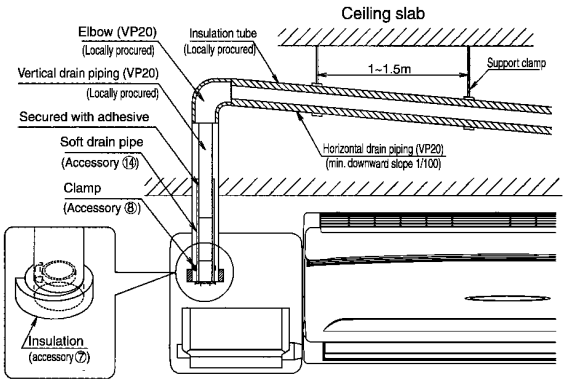

⑦ Test operation

- Make sure the pump is running and water is draining.
- Make sure there are no leaks from the drain pipes when draining.

⚠Caution
- Before the work confirm the power off.
- After replacing the circuit board cover to its original location, turn on the power.

1. Remove the front cover on the drain pump kit and fill the drain pan halfway with water.
2. Turn on the power and make sure that the drain pump is working properly and the drain water is flowing smoothly.

Abnormal-stop confirmation

1. Turn on the air conditioner.
2. Lift the float switch (abnormal) and make sure the air conditioner is stopped.

⚠Caution Do not get the drain pump mechanism

- After checking, replace the front cover.
- Rebuild the indoor unit as it was.

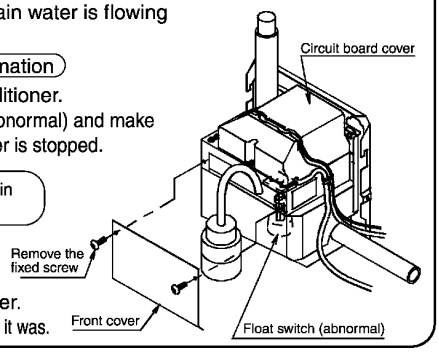

⑧ Attaching the casing

- Cut out the piping exit hole from the casing.
- Secure the casing with the installation screws and washers as described below.
- When securing the casing in two places right and left, use the screws and washers (accessory ⑯).

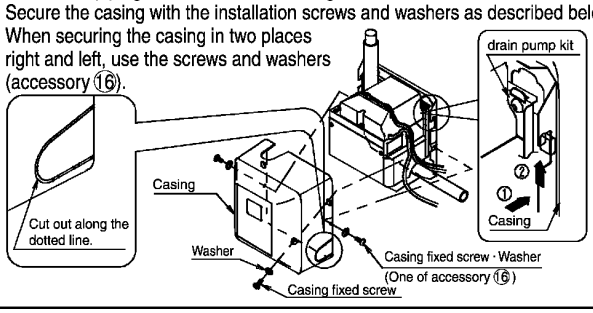

3K019618A

9 Checks after completion

You should re-check the following after completion of work.

Items to be checked	Check column
Are the indoor unit and drain pomp kit level?	
Is the drain piping properly connected? Is there any possibility of developing water leaks?	
Is the drain piping run on a downhill grade?(1/50~1/100)	
Is the drain hose properly insulated?	
Is the equipment wired correctly?	

After test running the air conditioner, use the operating in cooling and check the operating sound of the drain pump kit.

10 Cautions during operation

- The pump repeats an operation stop with the float switch for operation during airconditioning operation.
- After cooling is stopped, the residual water will be drained out, so do not turn off the power immediately.
- Wait at least 5 minutes after the unit has stopped before turning off the power. When not turning off a power supply, a remains operation about 20 minutes back drain pump stops.
  When a safe circuit operates, operation of an air conditioner is stopped.
- During air conditioning operation, when water leaks from the inside of an are conditioner or a drain pump kit, please stop operation immediately.
- Since the drain exit is choked up or there is possibility that the safe circuit may not operate normally, please inform the store of purchase.

Electric wiring

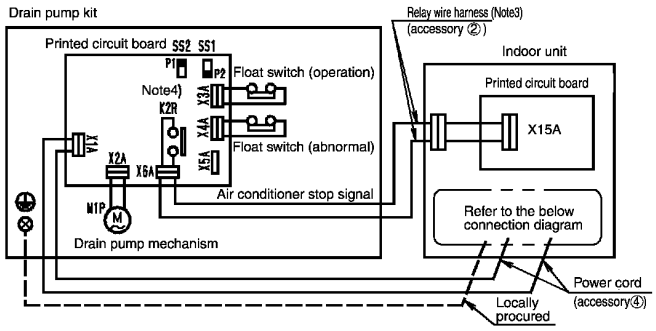

Application model	FAY71LVE FAYP71LV1	FXA20·25·32LVE(C) FXA40·50·63LVE FXAQ20·25·32M(A)VE FXAQ40·50·63M(A)VE FXAQ20·25·32·40·50·63PV1 FXAQ20·25·32·40·50·63PVE	FAQ71BUV1B FAQ71BVV1B 63M(A)E	FAQ71·100CVEB
Connection diagram	X2M Tes2 ⏚ 1 2 3	X2M ⏚ L N	X2M ⏚ 1 2 3	X2M 1 2 3 ⏚

The earth wire (copper) should be at least 2.0mm² or ϕ 1.6mm.
When the relay wire harness is connected, remove the X15A short-circuit connector.

Note1: Don't forget to turn on the power. If it is not turned on, the air conditioner will perform an error stop and operation will not be possible.
Note2: Make sure that slide switch SS1 on the drain pump kit printed circuit board assembly is set to P2 and slide switch SS2 is set to P1.
Note3: The relay wire harness cannot be extended.
Note4: Turning on the power will close the K2R connector, making is a non-volt B connector.

C: 3K019618A

13. FXL (Q) / FXN (Q) — Floor Standing Type / Concealed Floor Standing Type

13.1 KAFJ361K28 / 45 / 71 — Long-Life Replacement Filter

KAFJ361K28

- Can be water-washed. Can be reused.

Item / Model		KAFJ361K28	KAFJ361K45	KAFJ361K71
Average efficiency	%	50 (Gravity method)		
Initial pressure loss	Pa	9.8 or less		
Final pressure loss	Pa	29.4		
Life	h	2,500 (dust concentration 0.15 mg/m^3)		
Filter element		Mildew-proof resin net		
Number of sheets included		1		
Mass	kg	0.1	0.2	0.3

Dimensions Unit (mm)

KAFJ361K28

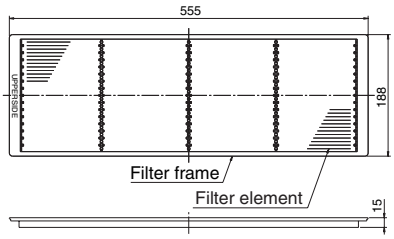

D3K2326

KAFJ361K45

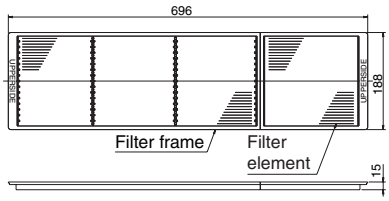

D3K2327

KAFJ361K71

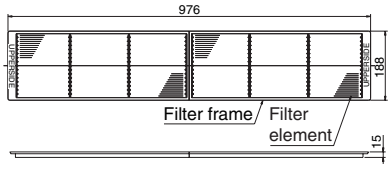

D3K2328

14. FXVQ — Floor Standing Duct Type

14.1 KAFJ261L140 · 224 · 280 / KAFJ261M450 · 560 — Replacement Long-life Filter

3

KAFJ261L140

• Can be water-washed. Can be reused.

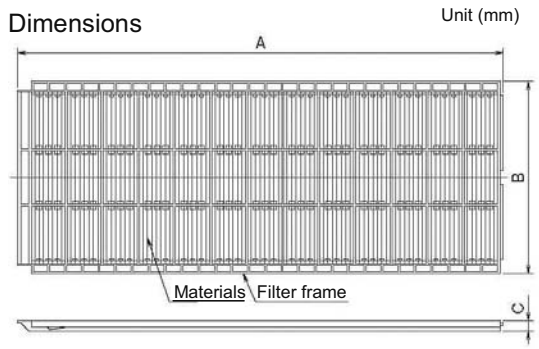

Model	A X B X C
KAFJ261L140	700 × 198 × 15 700 × 403 × 15
KAFJ261L224	700 × 403 × 15
KAFJ261L280	700 × 198 × 15 700 × 403 × 15
KAFJ261M450	483 × 315 × 20
KAFJ261M560	483 × 315 × 20

Item \ Model	KAFJ261L140	KAFJ261L224	KAFJ261L280	KAFJ261M450	KAFJ261M560
Average Efficiency (%)	40 (Gravity method)			50 (Gravity method)	
Initial Pressure Loss (Pa)	9.0				
Final Pressure Loss (Pa)	49.0				
Life (h)	2,500 hours (dust concentration 0.15 mg/m³)				
Materials	Mildew proof resin net				
Number of Sheets Included	2 (each 1)	2	3 (Large:2, Small:1)	6	8

14.2 KAFSJ9A400 · 560 — Ultra Long-life Filter Unit

• Used after replacing with a standard filter. (No main body remodeling)
• Dust collection efficiency (45% gravity method) equivalent to that of long-life filter.
The interval between cleaning cycles is extended by four times or more.
• If installed in a pachinko parlour, maintenance is required only once a year. (Long-life filter: 3 months)
• Can be synchronized with coil cleaning (Approximately once a year in pachinko parlours) to realize economy of maintenance.

Caution

1. The filter should be cleaned (with water) regularly according to the table to the right.
2. The filter unit collects dirt and dust, but, since it collects cigarette smoke insufficiently, use in combination with an air purifier will improve effectiveness.

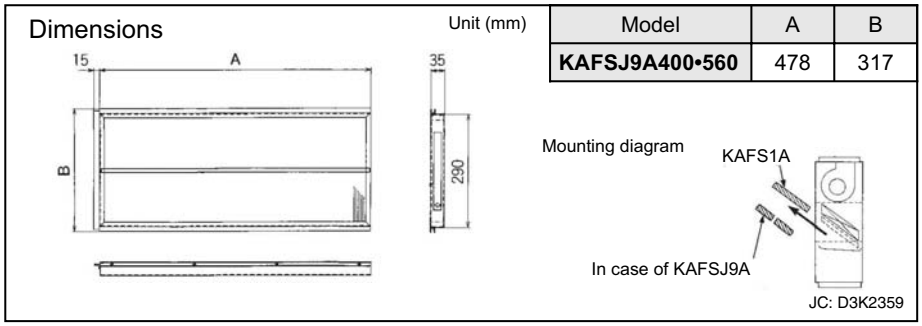

Model	A	B
KAFSJ9A400•560	478	317

Item \ Model	KAFSJ9A400	KAFSJ9A560
Precipitation Efficiency (%)	45 or more (Gravity method)	
Initial Pressure Loss (Pa)	25	
Final Pressure Loss (Pa)	49	
Life (h)	5,000 hours (dust concentration 0.35 mg/m³)	
	10,000 hours (dust concentration 0.17 mg/m³)	
Materials	Mildew proof resin net	
Number of Sheets Included	6	8
Component Parts	Reinforcing plate/frame/filter material	
Mass (kg)	3.5	4.5

Both life shows a case that "the air purifier" is installed.

Mounting Locations	Approximately Every 10,000 Hours
Locations with Much Dust (e.g. Pachinko parlours, etc.)	Approximately every 5,000 hours
Locations with Little Dust (e.g. offices)	Approximately every 10,000 hours

14.3 KDDF-92A140~560 / KDDF-93A140~560 — High Efficiency Filter Chamber

Dimensions

Unit (mm)

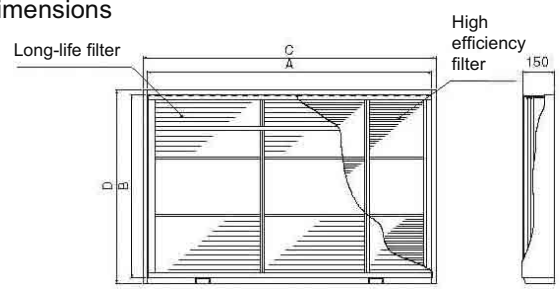

Model	Dimensions			
	A	B	C	D
KDDF-92A140	640	685	680	735
KDDF-92A200	840		880	
KDDF-92A280	1,060		1,100	
KDDF-92A400	1,050	865	1,090	915
KDDF-92A560	1,350		1,390	
KDDF-93A140	640	685	680	735
KDDF-93A200	840		880	
KDDF-93A280	1,060		1,100	
KDDF-93A400	1,050	865	1,090	915
KDDF-93A560	1,350		915	

Item \ Model		**KDDF-92A140**	**KDDF-92A200**	**KDDF-92A280**	**KDDF-92A400**	**KDDF-92A560**
Inserted Filter	Filter Chamber	KDDF-9A140	KDDF-9A200	KDDF-9A280	KDDF-9A400	KDDF-9A560
	High Efficiency Filter (65% Colorimetric Method)	KAF-92A140	KAF-92A200	KAF-92A280	KAF-92A400	KAF-92A560
	Long-life Filter	KAF-91A140	KAF-91A200	KAF-91A280	KAF-91A400	KAF-91A560
Mass (kg)		16.1	18.5	22.3	26.0	32.0

Item \ Model		**KDDF-93A140**	**KDDF-93A200**	**KDDF-93A280**	**KDDF-93A400**	**KDDF-93A560**
Inserted Filter	Filter Chamber	KDDF-9A140	KDDF-9A200	KDDF-9A280	KDDF-9A400	KDDF-9A560
	High Efficiency Filter (65% Colorimetric Method)	KAF-93A140	KAF-93A200	KAF-93A280	KAF-93A400	KAF-93A560
	Long-life Filter	KAF-91A140	KAF-91A200	KAF-91A280	KAF-91A400	KAF-91A560
Mass (kg)		16.1	18.5	22.3	26.0	32.0

14.4 KD-9A140~560 — Front Suction Base Flange

Dimensions

Unit (mm)

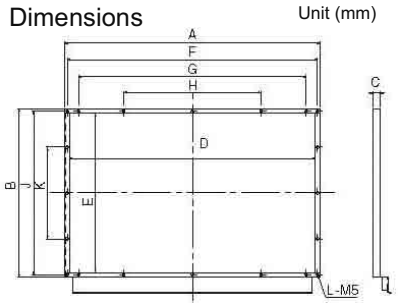

J: D3K2903

Model	A	B	C	D	E	F	G	H	J	K	L
KD-9A140	682	740	40	632	690	654	2×300=600	-	712	280	14
KD-9A200	882			832		854	800	250			16
KD-9A280	1,102			1,052		1,074	1,020	2×250=500			18
KD-9A400	1,092	920		1,042	870	1,064	1,010	2×250=500	892	2×250=500	20
KD-9A560	1,392			1,342		1,364	1,310	3×250=750			22

Item \ Model	**KD-9A140**	**KD-9A200**	**KD-9A280**	**KD-9A400**	**KD-9A560**
Material	Steel plate (painting)				
Mass (kg)	3.5	4.2	4.8	5.1	5.9

14.5 KDGF-9A140~560 — Suction Grille

Dimensions

Unit (mm)

KDGF-9A140·200·280

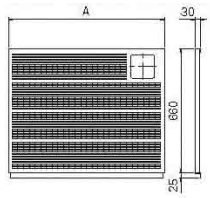

JC: D3K2905

Model	A
KDGF-9A140	630
KDGF-9A200	830
KDGF-9A280	1,050

KDGF-9A400

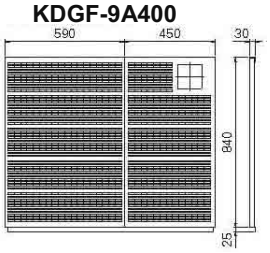

KDGF-9A560

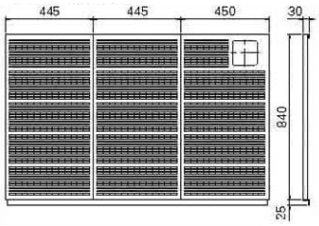

Item \ Model	KDGF-9A140	KDGF-9A200	KDGF-9A280	KDGF-9A400	KDGF-9A560
Material	Steel plate (painting)				
Mass (kg)	3.8	4.9	6.4	7.7	10

14.6 KAF-91A140~560 — Long-life Filter

Additional required optional items

- High efficiency filter chamber is necessary.
- Can be water-washed. Can be reused.

Dimensions

Unit (mm)

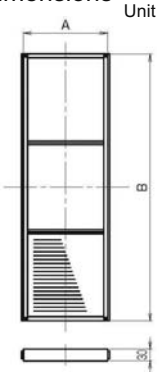

J: D3K2818

Model	A	B	C (Airflow Rate Passing Through Filter)	D (Number of Sheets)
KAF-91A140	210	670	16	1
	410	670	32	1
KAF-91A200	410	670	32	2
KAF-91A280	210	670	16	1
	410	670	32	2
KAF-91A400	340	850	40	3
KAF-91A560	330	850	40	4

Item \ Model	KAF-91A140	KAF-91A200	KAF-91A280	KAF-91A400	KAF-91A560
Average Efficiency (%)	50 (Gravity method)				
Initial Pressure Loss (Pa)	9.8 or less				
Final Pressure Loss (Pa)	49.0 or less				
Life (h)	2,500 hours or more (dust concentration 0.15 mg/m³)				
Airflow Rate Passing Through Filter	C m³/min				
Materials	Mildew proof resin net				
Number of Sheets Included (D)	2	2	3 (1+2)	3	4
Mass (kg)	2.0 (1+1)	2.4	3.2	4.5	6.0

14.7 KAF-92A140~560 / KAF-93A140~560 — High Efficiency Filter

Additional required optional items
• High efficiency filter chamber is necessary.

Dimensions

Unit (mm)

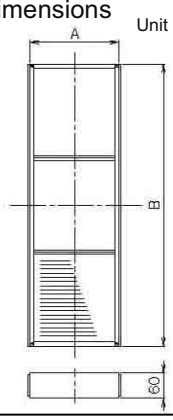

Model	A	B	C (Number of sheets)
KAF-92A140	210	670	1
	410		1
KAF-92A200	410		2
KAF-92A280	210		1
	410		2
KAF-92A400	340	850	3
KAF-92A560	330		4
KAF-93A140	210	670	1
	410		1
KAF-93A200	410		2
KAF-93A280	210		1
	410		2
KAF-93A400	340	850	3
KAF-93A560	330		4

Item \ Model	KAF-92A140	KAF-92A200	KAF-92A280	KAF-92A400	KAF-92A560	KAF-93A140	KAF-93A200	KAF-93A280	KAF-93A400	KAF-93A560
Average Efficiency (Colorimetric Method) (%)	65					90				
Initial Pressure Loss (Pa)	60			70		75			95	
Final Pressure Loss (Pa)	150								200	
Life (h)	2,200 hours or more (dust concentration 0.15 mg/m³)					1,800 hours or more (dust concentration 0.15 mg/m³)				
Materials	Non-woven fabric of synthetic fiber									
Number of Sheets Included (C)	2 (1+1)	2	3 (1+2)	3	4	2 (1+1)	2	3 (1+2)	3	4
Mass (kg)	3.0	3.6	4.8	5.7	7.6	3.0	3.6	4.8	5.7	7.6

14.8 KPC(J) — Plenum Chamber

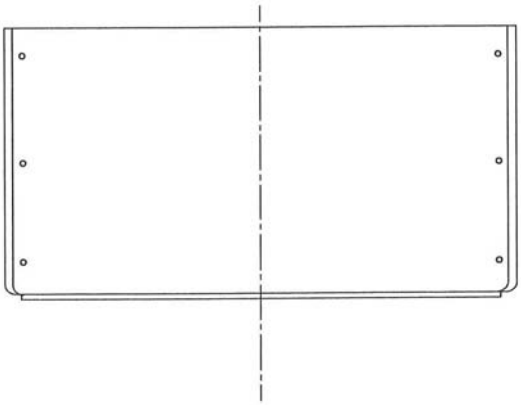

Plenum Chamber

Unit (mm)

	Kit Name	A	B	C	Mass (kg)
①	KPCJ140A	750	510	230	14
②	KPC5J	950			15
③	KPC8J	1,170			16
④	KPCJ400A	1,170	720		23
⑤	KPC15JA	1,470		320	27

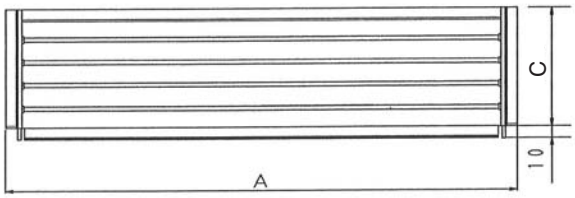

①②③

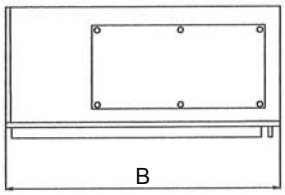

④⑤

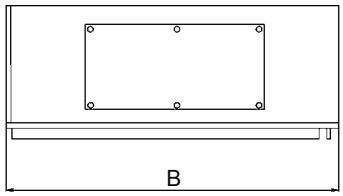

14.9 KPP5-10JA — Pulley for Plenum Chamber

Pulley Kit Manual

This pulley kit comprises a replacement pulley and V-belt kit for direct blowout in combination with the plenum chamber.

Components in this kit

(Variable motor pulley x 1, V-belt x 1, Manual)

Cautions regarding Usage

1. This kit should be used with no external static pressure applied.
2. This pulley in this kit is designed for 60 Hz regions. In 50 Hz regions, the pulley should be adjusted in accordance with the following guidelines.

The variable side pulley is provided with two set screws. Use one of the two screws for securing to the main body pulley shaft.
Use the remaining screw to secure the variable side pulley so that the clearance is AB mm as shown in the table below.

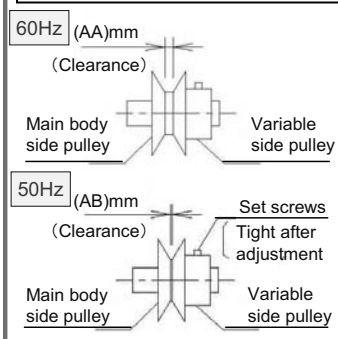

Kit Name	AA	AB
BPPJ190A	7.5	1.5
BPPJ262A	7.5	3.0
KPP5JA **KPP8JA** **KPP9JA** **KPP10JA** **RBP-KPP5JA** **RBP-KPP8JA** **RBP-KPP10JA**	6.0	0

3. After replacing the pulley, adjust the belt tension and parallelism with the fan pulley.

3P255225-1D

Pulley Kit Manual

This pulley kit comprises a replacement pulley and V-belt kit for direct blowout in combination with the plenum chamber.

Components in this kit

(Variable motor pulley x 1, V-belt x 1, Manual)

Cautions for Usage

1. This kit should be used with no external static pressure applied.
2. This pulley in this kit is designed for 60 Hz regions. In 50 Hz regions, the pulley should be adjusted in accordance with the following guidelines.

The variable side pulley is provided with two set screws. Use one of the two screws for securing to the main body pulley shaft.
Use the remaining screw to secure the variable side pulley.

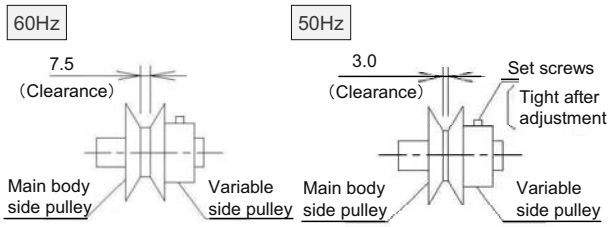

3. After replacing the pulley, adjust the belt tension and parallelism with the fan pulley.

3P265225-2B

14.10 KD106D10 / KDFJ906A560 — Fresh Air Intake Kit

KD106D10

Caution

- A fabric duct (field supply) should always be used for the connection point between the air conditioner and duct and vibration isolation of the ducting system and air conditioner should be implemented.

Dimensions

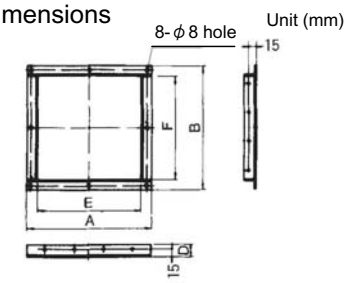

Example

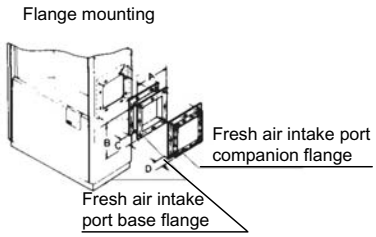

The above diagram shows companion flanges only.

JC: D3K0677

Item \ Model		KD106D10	KDFJ906A560
Dimensions (mm)	A	260	350
	B	260	350
	C	40	
	D	25	
Inner Diameter of Connection Duct (mm)	E	210	300
	F	210	300
Component Parts		Base flange, Companion flange, Cover plate, Bolts, Nuts, Installation manual	

14.11 KDFJ905A140 · 200 · 280 · 400 · 560 — Rear Suction Kit

Caution
- A fabric duct (field supply) should always be used for the connection point between the air conditioner and duct and vibration isolation of the ducting system and air conditioner should be implemented.

Dimensions Unit (mm) Example

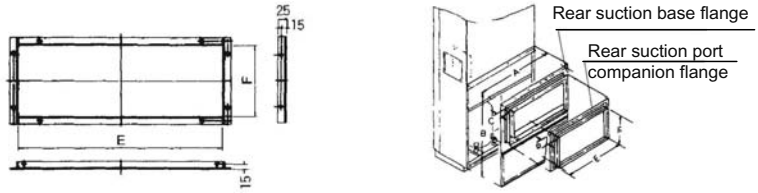

The above diagram shows companion flanges only.

JC: D3K2355B

Item \ Model		KDFJ905A140	KDFJ905A200	KDFJ905A280	KDFJ905A400	KDFJ905A560
Dimensions (mm)	A	740	940	1,160	1,160	1,460
	B	514	514	514	484	484
	C	40	40	40	40	40
	D	25	25	25	25	25
Inner Diameter of Connection Duct (mm)	E	640	840	1,060	1,050	1,350
	F	260	260	260	300	300
Component Parts		Base flange, Companion flange, Front shield plate, Bolts, Nuts, Installation manual				
Mass (kg)		12	17	19	21	24

14.12 KD101A10 · 20 — Discharge Grille for Plenum Side

KD101A10

- The airflow direction can be set to the left and right of the air conditioner to match the room condition. The vertical blade direction can be adjusted to the left or right.
  →The airflow direction can be adjusted as required.

Dimensions Unit (mm) Example of grille mounting

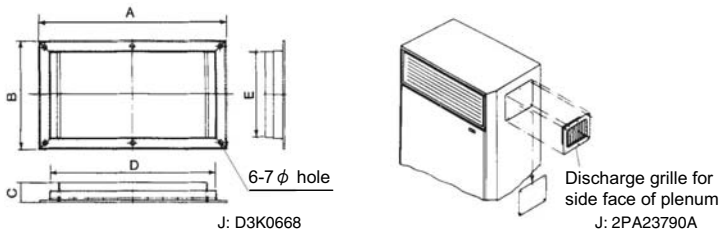

J: D3K0668 J: 2PA23790A

Item \ Model		KD101A10	KD101A20
Dimensions (mm)	A	330	444
	B	190	255
	C	35	
Mass (kg)		0.5	0.7
Diameter of Connection Duct (mm)	D	290	404
	E	150	215
Bolt Pitch	Width	2 × 155	2 × 213
	Length	170	235
Colour		Ivory (Munsell value: Approximately 5Y7.5/1)	
Component Parts		Discharge grille, Screws and washers, Installation manual	

14.13 KWF1G5P · 8P / KKWJ9A140 · 400 / KWF1G15 — Wood Base

KWF1G5

- The air conditioner should be installed so that its weight is distributed evenly on the floor.
- (KWF1G5P • 8P • 15) with shock absorbing rubber.
- Easy drain piping.
  →Drain piping is sloped downward to facilitate drain discharge.

Dimensions Unit (mm)

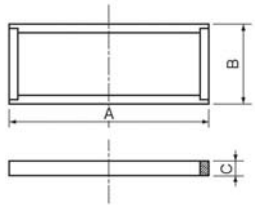

J: D3K0968A

Model	Dimensions		
	A	B	C
KKWJ9A140	730	480	85
KKWJ9A400	1,150	685	85
KWF1G5P	930	480	85
KWF1G8P	1,150	480	85
KWF1G15	1,450	685	85

Item \ Model	**KKWJ9A140**	**KKWJ9A400**
Materials	Western hemlock (Depending on the materials market status, Douglas fir may also be used.)	
Shape	Onsite assembly	
Colour	DK Black (Munsell value: Approximately N-1.2)	
Accessories	Shock absorbing rubber (t=2mm)	
Mass (kg)	5.0	10.0

Item \ Model	**KWF1G5P**	**KWF1G8P**	**KWF1G15**
Materials	Western hemlock (Depending on the materials market status, Douglas fir may also be used.)		
Shape	Onsite assembly		
Colour	DK Black (Munsell value: Approximately N-1.2)		
Accessories	Shock absorbing rubber (t=2mm)		
Mass (kg)	5.0	6.0	11.5

14.14 K-ABSG1406A-1410A — Vibration Isolating Frame

Vibration Isolating Frame Installation manual

Please be sure to read the following before installation and follow the instructions carefully when performing installation work.

Before Installation

Please check that the product number on the product nameplate matches the product order.
Please check the accessories (nuts and bolts).

Fig. 1 <Shape>

In case of K-KSV, K-ABSG**, K-ABSZ**, K-CBSG**, K-CBSZ****

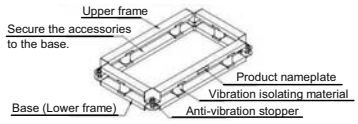

In case of K-ABS, K-ABSV**, K-CBS**, K-CBSV****

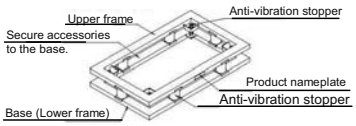

*1: "機械銘板側", "配管側" or "搭載機正面側" is stamped on the upper frame corresponding to the machine nameplate or the piping side of mounted units.
*2: The vibration isolation material differs in arrangements and numbers depending on the type of the model.

Accessories

Nut and bolt joint shapes										
There are two types of hole for device mounting bolts and anchor bolts: Through-frame and bracket types.				<Device mounting bolt> Through type / Bracket type; <Anchor bolt> Through type / Bracket type						
				In case of K-KSV**, K-ABSG**, K-ABSZ**, K-CBSG**, K-CBSZ**				In case of K-ABS**, K-ABSV**, K-CBS**, K-CBSV**			
Nut and bolt joint shapes		Device mounting bolt hole		Through type	Through type	Bracket type	Bracket type	Through type	Through type	Bracket type	Bracket type
		Anchor bolt hole		Through type	Bracket type	Through type	Bracket type	Through type	Bracket type	Through type	Bracket type
Accessories	For device mounting	Hexagon head bolt		○				○			
		Hexagon head nut		○				○			
		Spring washer		○				○			
		Plain washer		○				○			
		Plain washer (Large)		○	○						
		Square washer						○	○		
	For anchors	Plain washer (Large)	For M12 O.D. ϕ32	○		○					
		Square washer	For M12 O.D. □42 For M16 O.D. □52					○		○	

* ○ mark: Number equivalent to the number of bolt setting points provided as accessories.

<For connection types> The connection nuts and bolts are provided as accessories as shown in the figures below for connection installation of two or more vibration isolation frames.

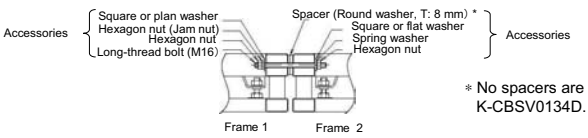

* No spacers are provided as accessory for K-CBSV0134D. Please connect this unit as it is.

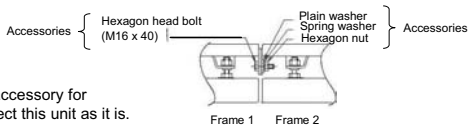

Part 4
Outdoor Units (including BS units)

1. Cool / Heat Selector 733
   1.1 KRC19-26A 733
2. Fixing Box 734
   2.1 KJB111A 734
3. REFNET Header 735
   3.1 KHRJ26K11 / 17 / 18 / 37 / 40H 735
   3.2 KHRP26M22 / 33 / 72 / 73H 739
   3.3 KHRP25M33 / 72 / 73H 742
4. REFNET Joint 745
   4.1 KHRJ26K11 / 17 / 18 / 37 / 40 / 75T 745
   4.2 KHRP26A22 / 33 / 72 / 73T 753
   4.3 KHRP25A22 / 33 / 72 / 73T 756
5. Outdoor Unit Multi Connection Piping Kit 759
   5.1 BHF22M90 / 135 759
   5.2 BHFP22P100 / 151 762
   5.3 BHFP26P90 / 136 768
   5.4 BHFP22MA56 / 84, BHFP26MA56 / 84 780
   5.5 BHFP22P36 / 54C 787
   5.6 BHFP26P36C 791
   5.7 BHFP26P63C 795
   5.8 BHFP26P84C 799
6. Pipe Size Reducer 803
   6.1 KHRP26M73TP / 73HP 803
   6.2 KHRJ26K40TP / 40HP / 75TP / 76TP 804
7. Auxiliary Pipe Kit 805
   7.1 KHFP22B8 / 10 / 12 / 16 / 18P 805
8. Closed Pipe Kit 806
   8.1 KHFP26A100C 806
9. Central Drain Pan Kit 807
   9.1 KWC26B160 / 280 / 450(E) 807
   9.2 KWC26C160 / 280 / 450(E), KWC25C450 809
10. Central Drain Plug 812
   10.1 KKPJ5F180 812
11. Wire Fixture for Preventing Overturning 813
   11.1 K-KYZP15C 813
12. Fixture for Preventing Overturning 815
   12.1 KPT-60B160 815
13. Refrigerant Pipe Filter Kit 816
   13.1 BHF26A450F 816
14. Digital Pressure Gauge 819
   14.1 BHGP26A1 (E) 819

15. Strainer Kit 821
15.1 BWU26A15 / BWU26A20 821

1. Cool / Heat Selector

1.1 KRC19-26A

This remote controller has a switch to enable selection of a heating or cooling operation for each outdoor unit or system. The controller can also be used to switch to the fan operation mode, for example, during moderate weather season.

Dimensions Unit (mm)

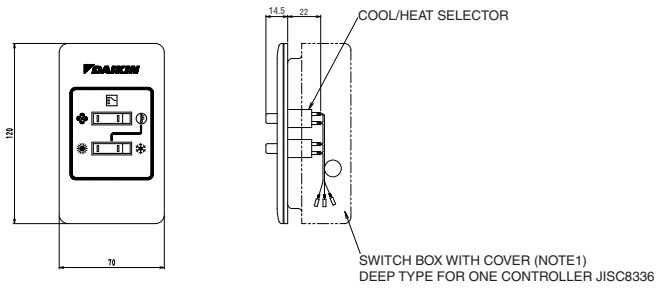

NOTE) 1. THE SWITCH BOX IS NOT ATTACHED.

C: 3D032519A

- Basically, this remote controller is not necessary for the Cooling/Heating *VRV* System and the Cooling Only *VRV* System.
- When the BS unit that automatically selects either cooling or heating operation mode is used in the manual mode, this remote controller can be connected to the BS unit.

Installation Point

1. Remove the decorative plate.
   - Insert a (-) screwdriver in the gap between the concaved part of the decorative plate and the remote control switch to open it.

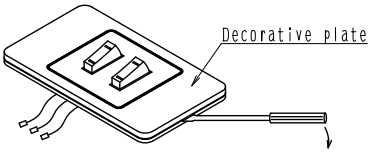

2. Provide the wiring between the remote control switch and the outdoor unit.
   - Connect terminals (A, B, C) on the back side of the remote control switch to terminals (A, B, C) on the outdoor unit.
   - ----shows field wiring.
   - Use the wires shown below ror the wiring.

Kind of wires	Polyvinyl chloride insulated and sheathed cords or cables.
Size of wires	0.75～1.25mm²

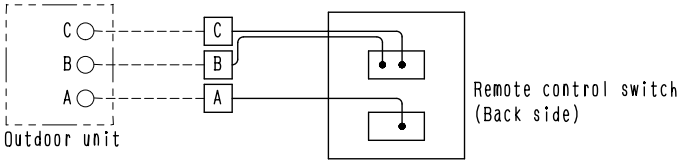

3. Attach the remote control switch to the switch box (To be obtained locally) as shown below.

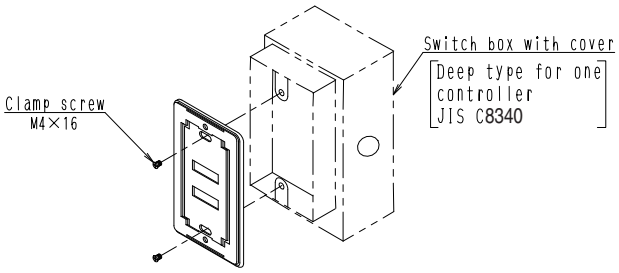

4. Attach the decorative plate.

Note; The switch box and connecting wires are not attached.

C: 3P077945A

2. Fixing Box

2.1 KJB111A

Dimensions Unit (mm)

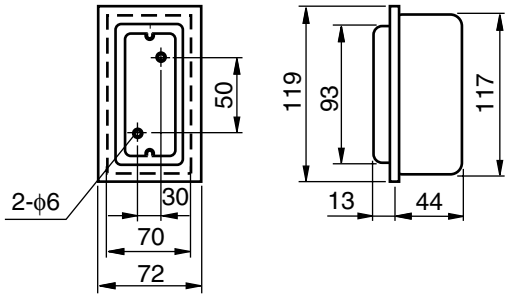

Component parts

Name		Switch box	Cover	Wood screw A (5.1×25)	Clamp screw B (M4×16)
Q'ty	KJB111A	1	1	2	2
Shape		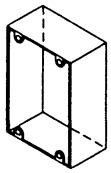	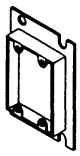		

Installation Manual

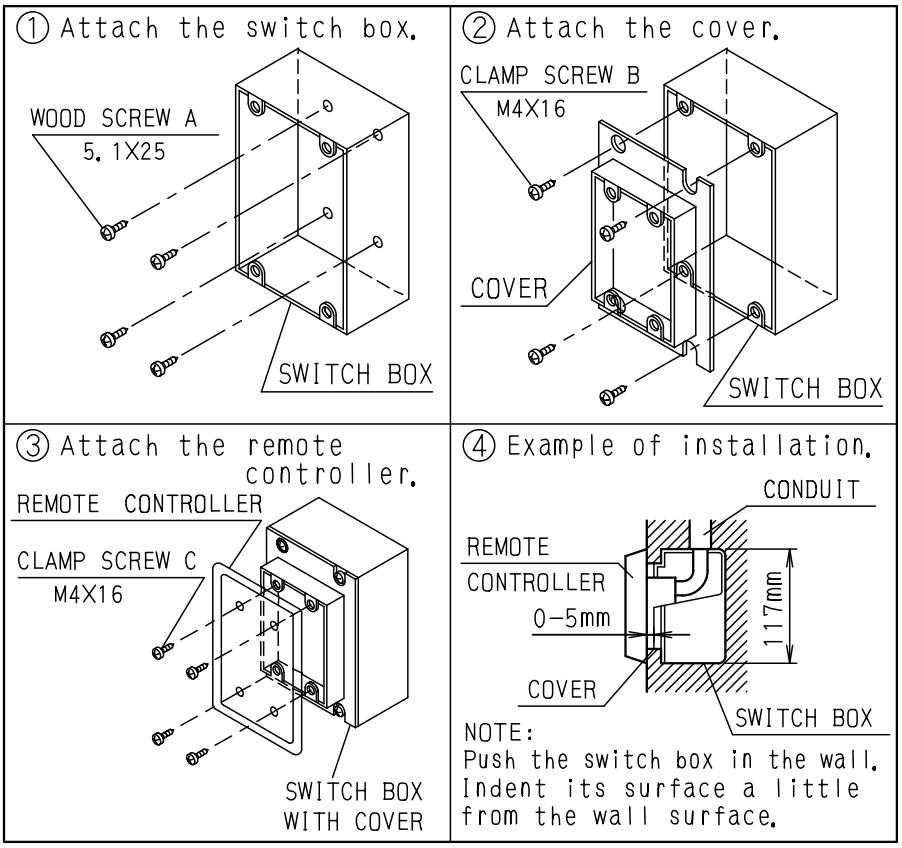

NOTES: 1. Refer to the installation of each remote controller.
2. Do not bind the lead wires for switch box with the power cord and the link wiring.
This may cause erratic operation.
3. The remote controller and the clamp screw C are one kit.
They are sold separately and attach to the switch box.

C: 3PA34878C

3. REFNET Header

3.1 KHRJ26K11 / 17 / 18 / 37 / 40H

KHRJ26K11H

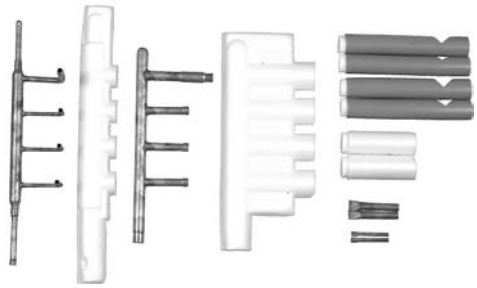

4

REFNET HEADER INSTALLATION MANUAL
(Except for JAPAN) KHRJ26K11H・17H

■ This kit includes the following parts.

KIT NAME	PARTS NAME						
	GAS SIDE HEADER	LIQUID SIDE HEADER	PLUGGING TUBES	INSULATION	INSULATION FOR GAS SIDE ENCLOSED PIPING	INSULATION FOR LIQUID SIDE PIPING	TAPE
KHRJ 26K11H	One header	One header	2 each for gas/ liquid sides	1 each for gas/ liquid sides	2 pcs.	4 pcs.	16 Sheets
KHRJ 26K17H	One header	One header	6 each for gas/ liquid sides	1 each for gas/ liquid sides	6 pcs.	8 pcs.	30 Sheets

SELECTION PROCEDURE

❶ Total the capacity of indoor unit in the downstream from it's HEADER and select the kit from the table below.

INDOOR UNIT TOTAL CAPACITY	KIT NAME
Less than 100	KHRJ26K11H
Not less than 100	KHRJ26K17H

・For the model name of indoor unit which can be combined, refer to the installation manual attached to the product.

(Find the indoor unit capacity by calculation from the nominal capacity indicated on the model name according to the table below.)

INDOOR UNIT NOMINAL CAPACITY	CAPACITY
Type 20	20
Type 25	25
Type 32	31.25
Type 40	40
Type 50	50
Type 63	62.5
Type 80	80
Type 100	100
Type 125	125

❷ According to the following procedure, determine the piping size at each part.

・Connect between the outdoor unit and the first HEADER according to the outdoor unit connection size.

OUTDOOR UNIT	GAS PIPE SIZE	LIQUID PIPE SIZE
Type 5 (HP)	φ19.1	φ9.5

・Connect between the HEADER and indoor unit according to the indoor unit connection size.

INDOOR UNIT NOMINAL CAPACITY	GAS PIPE SIZE	LIQUID PIPE SIZE
Types 20・25・32・40	φ12.7	φ6.4
Types 50・63・80	φ15.9	φ9.5
Types 100・125	φ19.1	φ9.5

The outlet/inlet piping sizes of refrigerant branching header of each kit are as shown in the table below.

KIT NAME	GAS SIDE HEADER	LIQUID SIDE HEADER
KHRJ26K11H	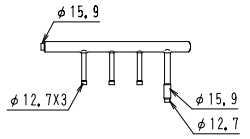	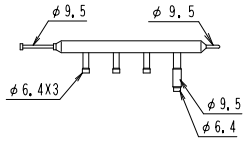
KHRJ26K17H	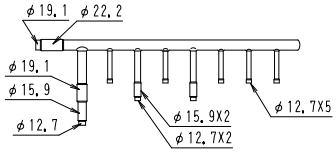	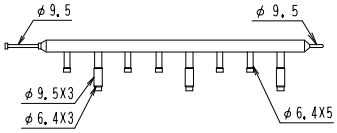

3P234615

INSTALLATION PROCEDURE

❶ For the outlet/inlet pipings which can be connected in several piping sizes, cut the connections of piping diameter to be used with a pipe cutter according to the left lower table.

❷ For non-connected outlet/inlet pipings at the indoor unit side for refrigerant branching, install the supplied plugging tube.

❸ When connecting the field piping to outlet/inlet piping part B at the outdoor unit of liquid side header:
- Cut part B as shown at right with a pipe cutter and install it to part A.
- Connect the flared field piping to part B.

❹ HEADER HEAT INSULATION

GAS SIDE HEADER:

(1) Insulate the gas side header with the supplied insulation.

(2) Seal the supplied insulation and field piping insulation joint with the supplied tape.

(3) Seal the plugging tube mounting part with the field supplied tape after installing the supplied insulation for the supplied plugging tube.

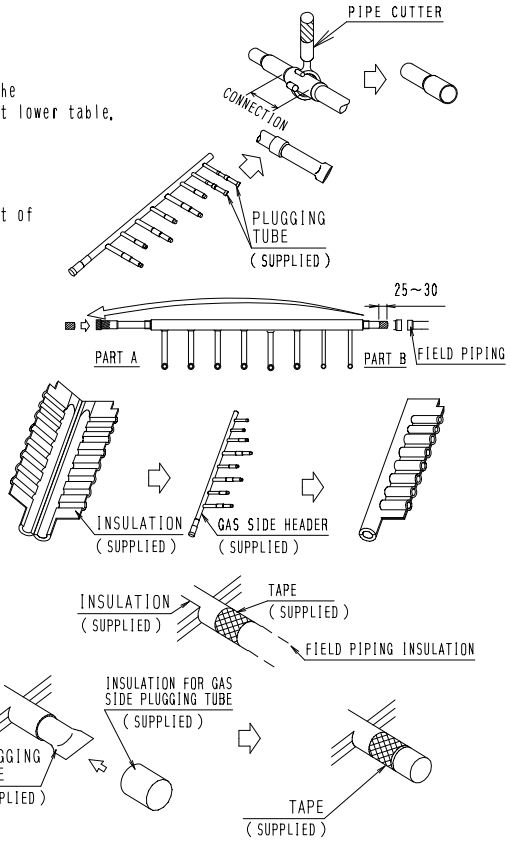

LIQUID SIDE HEADER:

(1) When cooling operation may be performed in outdoor temperature 15℃ or under also insulate the liquid side header.

(2) Seal the supplied insulation and liquid side piping insulation joint, the supplied liquid side piping insulation bending part, and the joint with the field piping insulation, using the supplied tape. Seal the supplied insulation with a vinyl tape, for example.

(3) Using the supplied tape, seal the plugging tube mounting part after installing the insulation for liquid side piping (supplied).

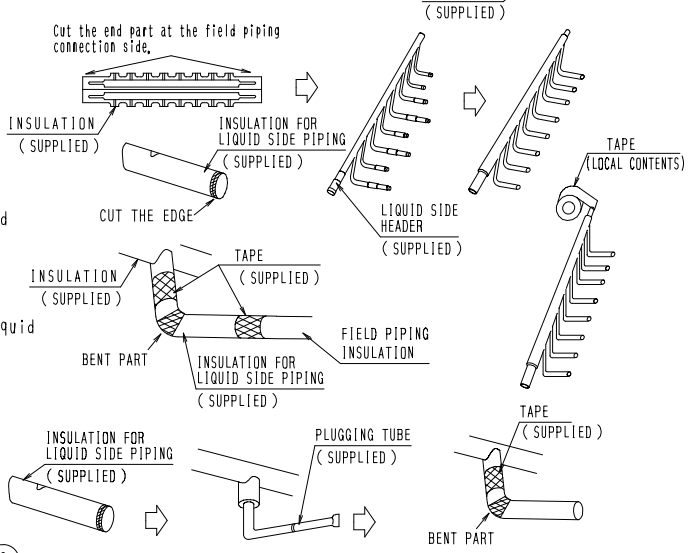

INSTALLATION OF HEADER FOR REFRIGERANT BRANCHING

GAS SIDE HEADER:

- Place the header on the pedestal and install it so that it is horizontal.

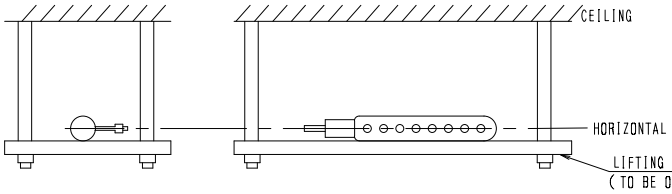

LIQUID SIDE HEADER:

- Suspend the header from the ceiling, and be sure to install it so that the outlet/inlet pipings at the header indoor unit side are horizontal at the lower side as shown below.

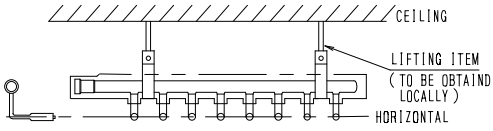

3P234615

REFNET HEADER INSTALLATION MANUAL (Except for JAPAN)

KHRJ26K18H・37H・40H

4

■ This kit includes the following parts.

KIT NAME	PARTS NAME						
	GAS SIDE HEADER	LIQUID SIDE HEADER	PLUGGING TUBES	INSULATION FOR HEADER	INSULATION FOR SUCTION GAS AND DISCHARGE GAS SIDE ENCLOSED PIPING	INSULATION FOR LIQUID SIDE PIPING	TAPE
KHRJ 26K18H 6 branches	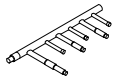	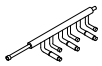	4 each for gas/ liquid sides	1 each for gas/ liquid sides	4 PCS.	6 PCS.	23 Sheets
KHRJ 26K37H 8 branches	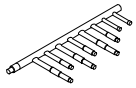	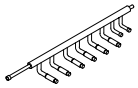	6 each for gas/ liquid sides	1 each for gas/ liquid sides	6 PCS.	8 PCS.	30 Sheets
KHRJ 26K40H 8 branches	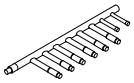	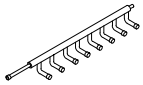	6 each for gas/ liquid sides	1 each for gas/ liquid sides	6 PCS.	8 PCS.	45 Sheets

SELECTION PROCEDURE

❶ Total the capacity of indoor unit in the downstream from it's HEADER and select the kit from the table below.

INDOOR UNIT TOTAL CAPACITY	KIT NAME
Less than 160	KHRJ26K18H (Maximum of 6 branching)
Not less than 160, less than 330	KHRJ26K37H (Maximum of 8 branching)
Not less than 330, less than 640	KHRJ26K40H (Maximum of 8 branching)+KHRJ26K40HP

・VRV PLUS series, use KHRJ26K40H+KHRJ26K40HP

・For the model name of indoor unit which can be combined, refer to the installation manual attached to the product.

(Find the indoor unit capacity by calculation from the nominal capacity indicated on the model name according to the below.)

INDOOR UNIT NOMINAL CAPACITY	CAPACITY
Type 20	20
Type 25	25
Type 32	31.25
Type 40	40
Type 50	50
Type 63	62.5
Type 80	80
Type 100	100
Type 125	125
※Type 200	200
※Type 250	250

※ Indoor unit(Type 200, 250) can not be connected the HEADER.

※ Connected indoor unit(Type 200, 250) after branching at upstream HEADER.

❷ According to the following procedure, determine the piping size at each part.

・Connect between the outdoor unit and the first HEADER according to the outdoor unit connection size.

OUTDOOR UNIT	LIQUID PIPE SIZE	GAS PIPE SIZE
Type 8(HP)	φ12.7	φ25.4
Type 10(HP)	φ12.7	φ28.6

・Connect between the outdoor unit and the first HEADER according to the outdoor unit connection size.

OUTDOOR SYSTEM NAME	LIQUID PIPE SIZE	GAS PIPE SIZE
RXY16K	φ15.9	φ34.9
RXY18～20K	φ19.1	φ34.9
RXY24K	φ19.1	φ41.3

・Connect between the HEADER and indoor unit according to the indoor unit connection size.

INDOOR UNIT NOMINAL CAPACITY	LIQUID PIPE SIZE	SUCTION GAS PIPE SIZE
Type 20・25・32・40	φ6.4	φ12.7
Type 50・63・80	φ9.5	φ15.9
Type 100・125	φ9.5	φ19.1

3P234616

INSTALLATION PROCEDURE

- The outlet/inlet piping sizes of refrigerant branching header of each kit are as shown in the table below.

KIT NAME	GAS SIDE HEADER	LIQUID SIDE HEADER
KHRJ26K18H	φ15.9 φ19.1 φ12.7X3 φ19.1 φ15.9 φ12.7 φ15.9X2 φ12.7X2	φ9.5 φ9.5 φ9.5X3 φ6.4X3 φ6.4X3
KHRJ26K37H	φ28.6 φ25.4 φ12.7×2 φ31.8 φ15.9×3 φ12.7×3 φ19.1X3 φ15.9×3 φ12.7×3	φ15.9 φ12.7 φ12.7 φ9.5X6 φ6.4X6 φ6.4X2
KHRJ26K40H	φ38.1 φ31.8 φ19.1×6 φ15.9×6 φ15.9×2	φ19.1 φ15.9 φ15.9 φ9.5X8

1) For the outlet/inlet pipings which can be connected in several piping sizes, cut the connections of piping diameter to be used with a pipe cutter.

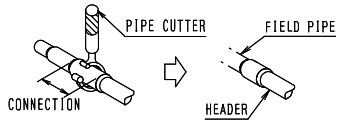

2) For non-connected outlet pipings at the indoor unit side for refrigerant branching, install the supplied plugging tube.

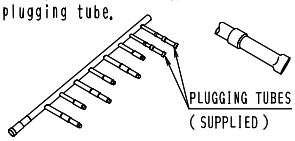

3) When connecting the field piping to inlet piping part B at the outdoor unit of liquid side header.
- Cut part B as shown with a pipe cutter and install it to part A.
- Connect the flared field piping to part B.

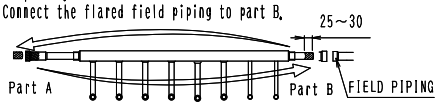

4)Heder heat insulation.

DISCHARGE/SUCTION GAS SIDE HEADER

i) Insulate the discharge/suction gas side header with the supplied insulation.

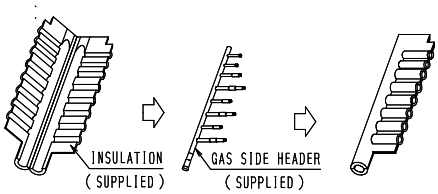

ii)Seal the supplied insulation and field piping insulation junction with the field supplied tape.

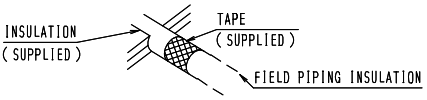

iii) Seal the plugging tube mounting part with the field supplied tape after installing the supplied insulation for the supplied plugging tube.

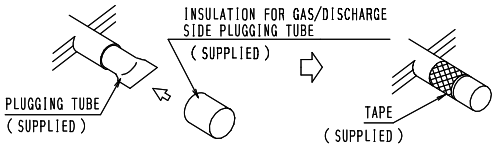

LIQUID SIDE HEADER

i) Insulate the header using the insulation for header and the insulation for liquid side piping.

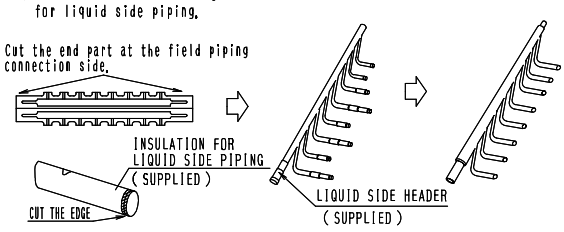

ii) Seal the supplied insulation and liquid side piping insulation joint, the supplied liquid side piping insulation bending part, and the joint with the field piping insulation, using the field supplied tape. Seal the supplied insulation with a vinyl tape, for example.

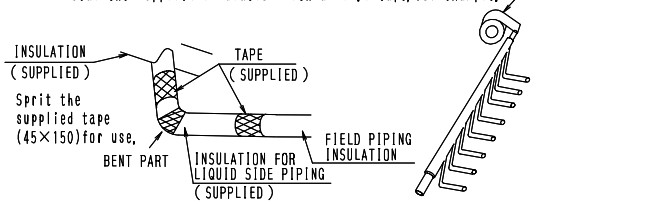

iii) Using the field supplied tape, seal the plugging tube mounting part after installing the insulation for liquid side piping (supplied).

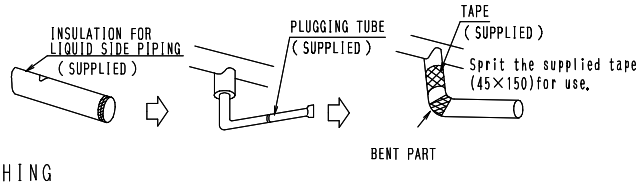

5) INSTALLATION OF HEADER REFRIGERANT BRANCHING

GAS SIDE HEADER

- Place the header on the pedestal and install it so that it is horizontal.

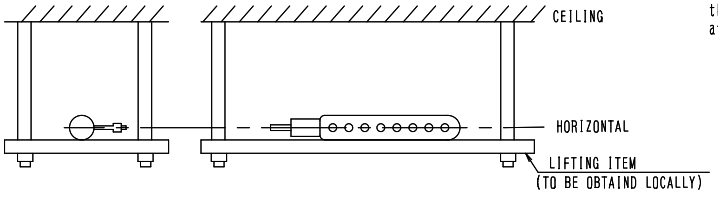

LIQUID SIDE HEADER

- Suspend the header from the ceiling, and be sure to install it so that the outlet/inlet pipings at the header indoor unit side are horizontal at the lower side as shown below.

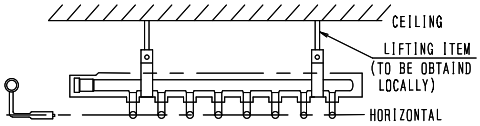

3P234616

3.2 KHRP26M22 / 33 / 72 / 73H

KHRP26M22H

Unit (mm)

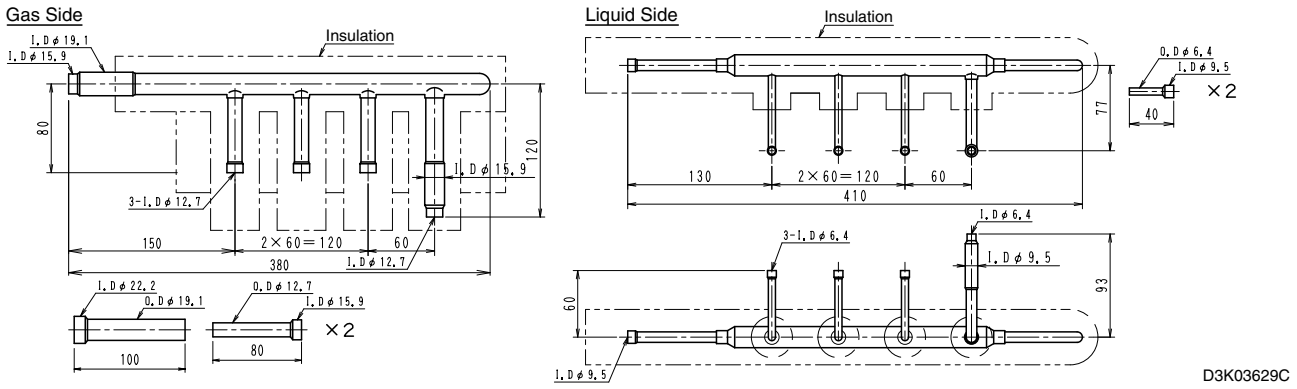

KHRP26M33H

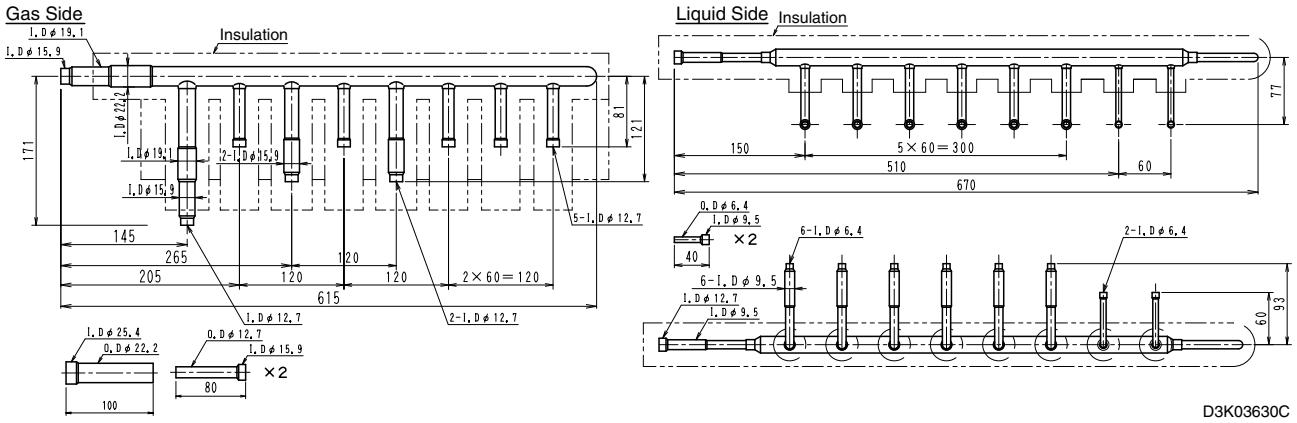

KHRP26M72H

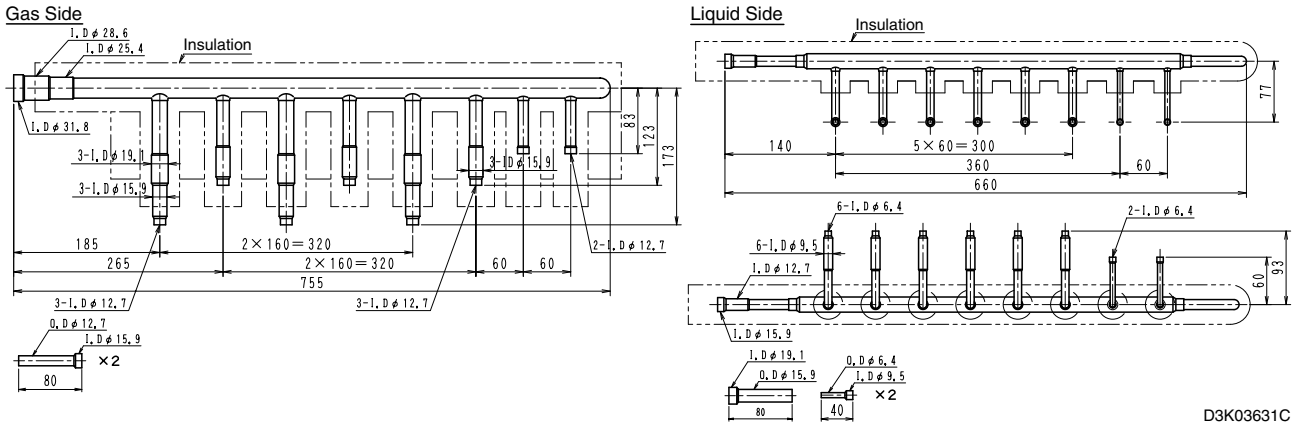

KHRP26M73H

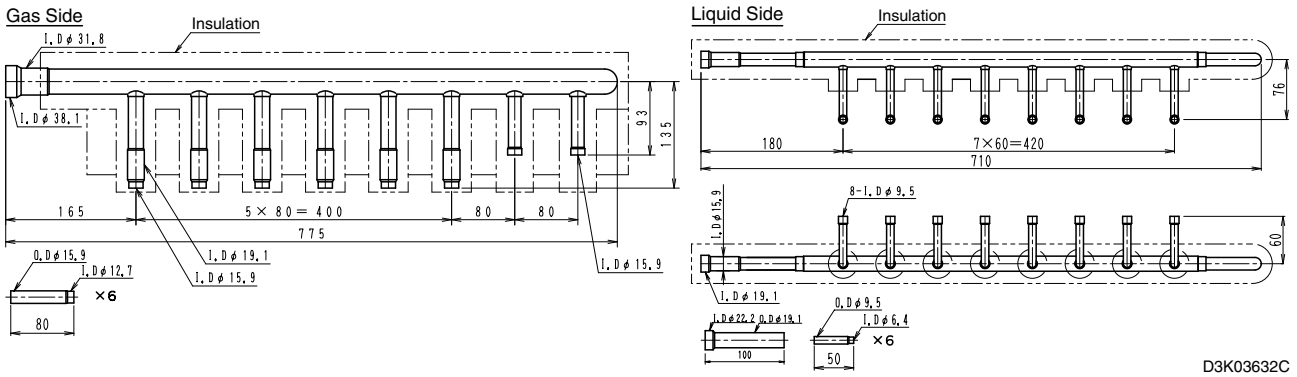

Installation Manual

■ THIS KIT INCLUDES THE FOLLOWING PARTS.

KIT NAME	SHAPE						
	GAS SIDE HEADER	LIQUID SIDE HEADER	PLUGGING TUBES	REDUCER	INSULATION FOR HEADER	INSULATION FOR GAS SIDE ENCLOSED PIPING	INSULATION FOR LIQUID SIDE PIPING
KHRP 26M22H 4branches	※ 1 pcs.	1 pcs.	2 each for gas/liquid sides	for gas sides (φ22.2)1pcs. (φ15.9)2pcs. for liquid sides (φ9.5) 2pcs.	1 each for gas/liquid sides	2 pcs.	4 pcs.
KHRP 26M33H 8branches	1 pcs.	1 pcs.	6 each for gas/liquid sides	for gas sides (φ25.4)1pcs. (φ15.9)2pcs. for liquid sides (φ9.5) 2pcs.	1 each for gas/liquid sides	6 pcs.	8 pcs.
KHRP 26M72H 8branches	1 pcs.	1 pcs.	6 each for gas/liquid sides	for gas sides (φ15.9) 2pcs. for liquid sides (φ19.1)1pcs. (φ9.5)2pcs.	1 each for gas/liquid sides	6 pcs.	8 pcs.
KHRP 26M73H 8branches	1 pcs.	1 pcs.	6 each for gas/liquid sides	6pcs. for gas sides(φ12.7) for liquid sides (φ6.4)6pcs. (φ22.2)1pcs.	1 each for gas/liquid sides	6 pcs.	8 pcs.

※…Make sure gas side header and liquid side header are for R410A.(Label for R410A is attached on each part.)

SELECTION PROCEDURE

According to the INSTALLATION MANUAL of outdoor unit.

INSTALLATION PROCEDURE

❶ The pipe size of each parts are shown below.

KIT NAME	GAS SIDE HEADER	LIQUID SIDE HEADER
KHRP26M22H 4branches	φ15.9 φ19.1 φ12.7X3 φ15.9 φ12.7	φ9.5 φ9.5 φ6.4X3 φ9.5 φ6.4
KHRP26M33H 8branches	φ15.9 φ19.1 φ22.2 φ19.1 φ15.9 φ12.7 φ15.9X2 φ12.7X2 φ12.7X5	φ12.7 φ9.5 φ9.5 φ9.5X6 φ6.4X6 φ6.4X2
KHRP26M72H 8branches	φ28.6 φ25.4 φ31.8 φ12.7×2 φ15.9×3 φ12.7×3 φ19.1X3 φ15.9×3 φ12.7×3	φ15.9 φ12.7 φ12.7 φ9.5X6 φ6.4X6 φ6.4X2
KHRP26M73H 8branches	φ38.1 φ31.8 φ19.1×6 φ15.9×6 φ15.9×2	φ19.1 φ15.9 φ15.9 φ9.5X8

3P113151C

❷ For the outlet/inlet pipings which can be connected in several piping sizes, cut the connections of piping diameter to be used with a pipe cutter according to the left lower table.

NOTE) 1. Cut in the center of the connections.
2. PIPE SIDE REDUCER
ex)When connecting the field pipe(φ22.2) to inlet liquid side pipe of KHRP26M73H, use PIPE SIDE REDUCER.

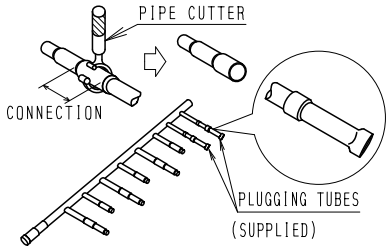

❸ For non-connected outlet pipings at the indoor unit side for refrigerant branching, install the supplied plugging tube.

When connecting the field piping to inlet piping part B at the outdoor unit of liquid side header.
- Cut part B as shown with a pipe cutter and install it to part A.
- Connect the flared field piping to part B.

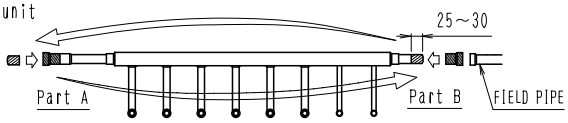

- Make sure to flow nitrogen gas through the pipe when brazing.

❹ Insulation of HEADER
- Be sure to insulate the gas and liquid side HEADER.

Note) The insulation of the refrigerant piping must be reinforced based on the environment of installation. Otherwise, dew may condensate on the surface of the insulation. For details, see Engineering Data.

GAS SIDE HEADER

i)Insulate the gas side header with the supplied insulation.

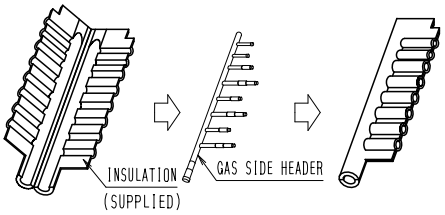

ii)Seal the supplied insulation and field piping insulation junction with the field supplied tape.

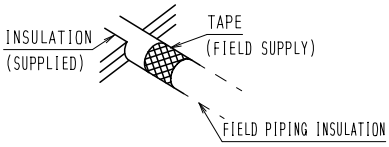

iii)Seal the plugging tube mounting part with the field supplied tape after installing the supplied insulation for the supplied plugging tube.

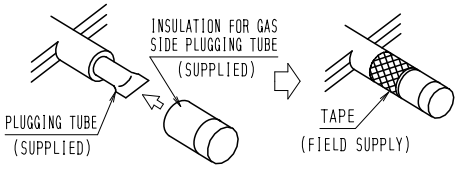

LIQUID SIDE HEADER

i) Insulate the header using the insulation for header and the insulation for liquid side piping.
Cut the end part at the field piping connection side.

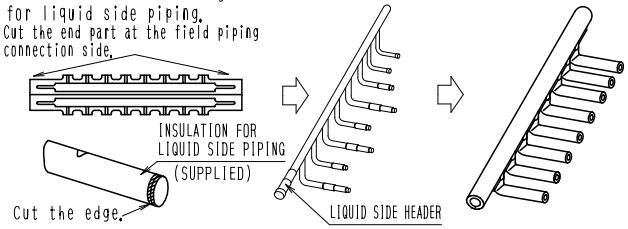

ii) Seal the supplied insulation and liquid side piping insulation joint, the supplied liquid side piping insulation bending part, and the joint with the field piping insulation, using the field supplied tape. Seal the supplied insulation with a vinyl tape, for example.

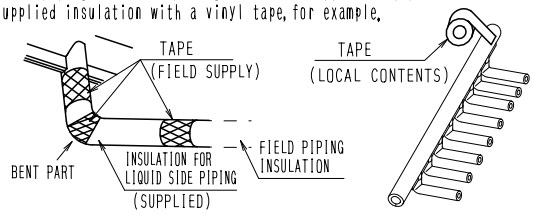

iii) Using the field supplied tape, seal the plugging tube mounting part after installing the insulation for liquid side piping (supplied).

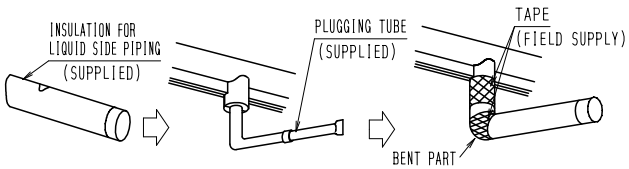

INSTALLATION PRECAUTIONS

- Do not apply extra force on the piping part. The brazed part may be damaged and it may result in gas leakage.

GAS SIDE HEADER
- Place the header on the pedestal and install it so that it is horizontal.

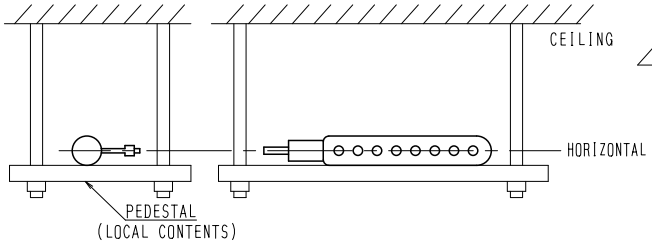

LIQUID SIDE HEADER
- Suspend the header from the ceiling, and be sure to install it so that the outlet/inlet pipings at the header indoor unit side are horizontal at the lower side as shown below.

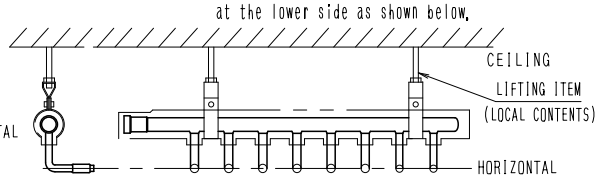

3P113151C

3.3 KHRP25M33 / 72 / 73H

KHRP25M33H

Unit (mm)

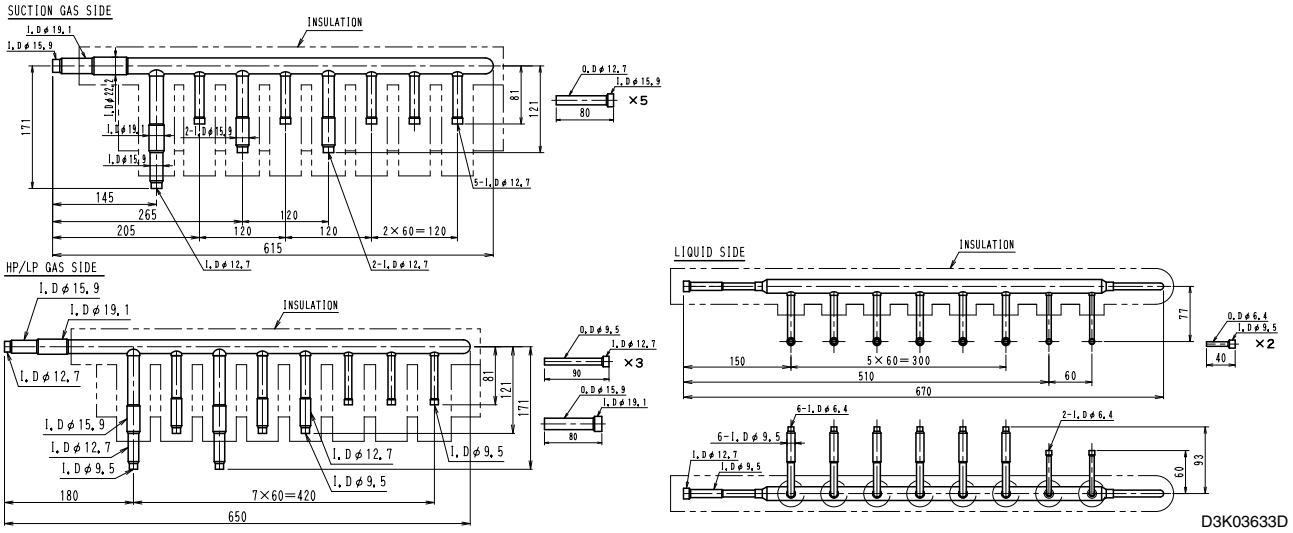

KHRP25M72H

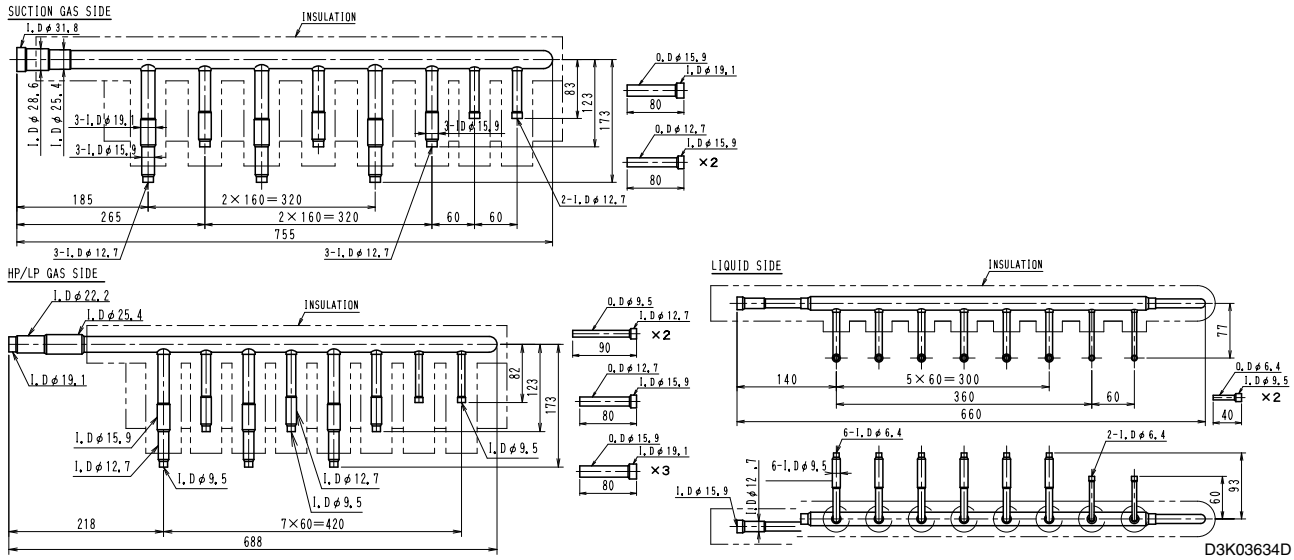

KHRP25M73H

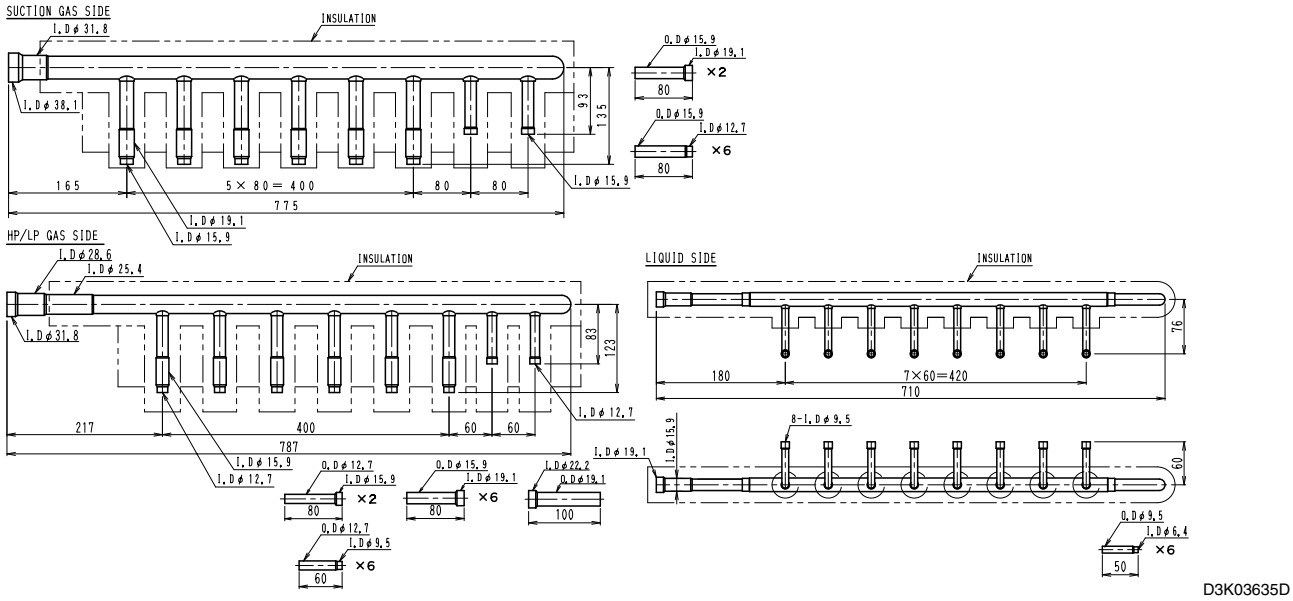

Installation Manual

■ THIS KIT INCLUDES THE FOLLOWING PARTS.

KIT NAME	SHAPE							
	SUCTION GAS SIDE HEADER	DISCHARGE GAS(HP/LP GAS) SIDE HEADER	LIQUID SIDE HEADER	INSULATION FOR HEADER	PLUGGING TUBES	REDUCER	INSULATION FOR GAS SIDE ENCLOSED PIPING	INSULATION FOR LIQUID SIDE PIPING
KHRP 25M33H 8branches	❋ 1 pcs.	1 pcs.	1 pcs.	2pcs. for gas side 1 pcs. for liquid side	6 each for suction gas/ discharge gas (HP/LP gas)/ liquid sides	suction gas side (φ15.9) 5pcs. discharge gas(HP/LP gas)side (φ19.1) 1pcs. (φ12.7) 3pcs. liquid side (φ9.5) 2pcs.	1 2pcs.	8pcs.
KHRP 25M72H 8branches	1 pcs.	1 pcs.	1 pcs.	2pcs. for gas side 1 pcs. for liquid side	6 each for suction gas/ discharge gas (HP/LP gas)/ liquid sides	suction gas (φ19.1) 1pcs. (φ15.9) 2pcs. discharge gas(HP/LP gas)side (φ19.1) 3pcs. (φ15.9) 1pcs. (φ12.7) 2pcs. liquid side (φ9.5) 2pcs.	1 2pcs.	8pcs.
KHRP 25M73H 8branches	1 pcs.	1 pcs.	1 pcs.	2pcs. for gas side 1 pcs. for liquid side	6 each for suction gas/ discharge gas (HP/LP gas)/ liquid sides	suction gas side (φ19.1) 2pcs. (φ12.7) 6pcs. discharge gas(HP/LP gas)side (φ19.1) 6pcs. (φ15.9) 2pcs. (φ9.5) 6pcs. liquid side (φ22.2) 1pcs. (φ6.4) 6pcs.	1 2pcs.	8pcs.

❋…Make sure suction gas side header, discharge gas(HP/LP gas) side and liquid side header are for R410A.
(Label for R410A is attached on each part.)

INTRODUCTION

This kit is designed as a refrigerant branching kit for HEAT RECOVERY unit for installation in buildings.

- Between outdoor unit and BS unit (upstream of BS unit), use 3 pipings. Use this kit for such branching application.
- Between BS unit and indoor unit (downstream of BS unit) and between REFNET HEADER and cooling-only indoor unit, use 2 pipings.

3 pipings	2 pipings	
Upstream of BS unit	Downstream of BS unit	To cooling-only indoor unit
Suction gas side piping Discharge gas(HP/LP gas) side piping Liquid side piping	Gas side piping Liquid side piping	Suction gas side piping Liquid side piping

SELECTION PROCEDURE

According to the INSTALLATION MANUAL of outdoor unit.

INSTALLATION PROCEDURE

❶ The pipe size of each parts are shown below.

KIT NAME	SUCTION GAS SIDE HEADER	DISCHARGE GAS(HP/LP GAS) SIDE HEADER	LIQUID SIDE HEADER
KHRP 25M33H 8branches	φ15.9 φ19.1 φ22.2 φ19.1 φ15.9 φ12.7 φ15.9X2 φ12.7X2 φ12.7X5	φ12.7 φ15.9 φ19.1 φ15.9X2 φ12.7X2 φ9.5X2 φ12.7X3 φ9.5X3 φ9.5X3	φ12.7 φ9.5 φ9.5 φ9.5X6 φ6.4X6 φ6.4X2
KHRP 25M72H 8branches	φ28.6 φ25.4 φ31.8 φ15.9×3 φ12.7×3 φ19.1X3 φ15.9×3 φ12.7×3 φ12.7×2	φ22.2 φ25.4 φ19.1 φ15.9X3 φ12.7X3 φ9.5X3 φ12.7×3 φ9.5×3 φ9.5×2	φ15.9 φ12.7 φ12.7 φ9.5X6 φ6.4X6 φ6.4X2
KHRP 25M73H 8branches	φ38.1 φ31.8 φ19.1×6 φ15.9×6 φ15.9×2	φ28.6 φ25.4 φ31.8 φ15.9×6 φ12.7×6 φ12.7×2	φ19.1 φ15.9 φ15.9 φ9.5X8

3P113623D

❷ For the outlet/inlet pipings which can be connected in several piping sizes, cut the connections of piping diameter to be used with a pipe cutter according to the left lower table.

NOTE) 1. Cut in the center of the connections.
2. PIPE SIDE REDUCER
ex)When connecting the field pipe(φ22.2) to inlet liquid side pipe of KHRP25M73H, use PIPE SIDE REDUCER.

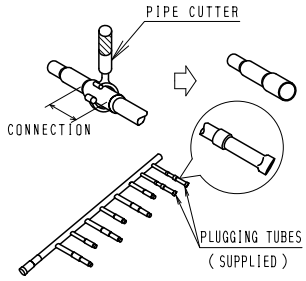

❸ For non-connected outlet pipings at the indoor unit side for refrigerant branching, install the supplied plugging tube.

When connecting the field piping to inlet piping part B at the outdoor unit of liquid side header.
- Cut part B as shown with a pipe cutter and install it to part A.
- Connect the flared field piping to part B.

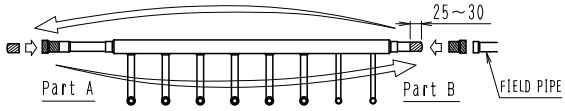

- Make sure to flow nitrogen gas through the pipe when brazing.

❹ Insulation of HEADER

- Be sure to insulate the gas and liquid side HEADER.

Note) The insulation of the refrigerant piping must be reinforced based on the environment of installation. Otherwise, dew may condensate on the surface of the insulation. For details, see Engineering Data.

SUCTION/DISCHARGE GAS SIDE HEADER

i)Insulate the gas side header with the supplied insulation.

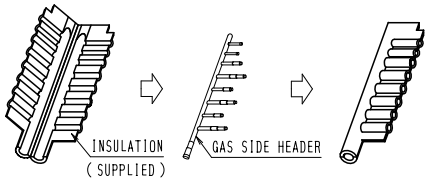

ii)Seal the supplied insulation and field piping insulation junction with the field supplied tape.

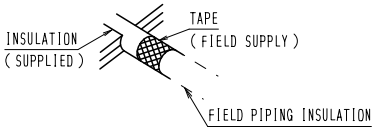

iii)Seal the plugging tube mounting part with the field supplied tape after installing the supplied insulation for the supplied plugging tube.

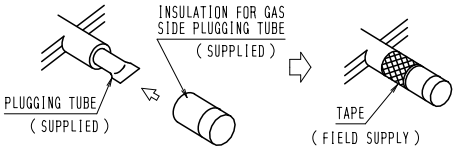

LIQUID SIDE HEADER

i) Insulate the header using the insulation for header and the insulation for liquid side piping.

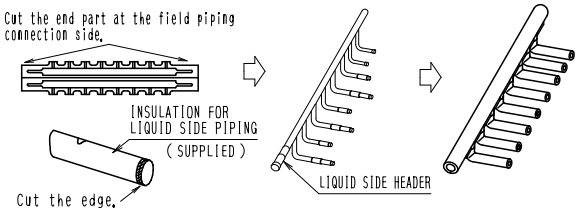

ii) Seal the supplied insulation and liquid side piping insulation joint, the supplied liquid side piping insulation bending part, and the joint with the field piping insulation, using the field supplied tape. Seal the supplied insulation with a vinyl tape, for example.

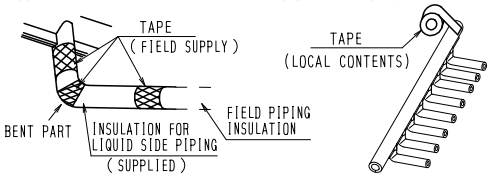

iii) Using the field supplied tape, seal the plugging tube mounting part after installing the insulation for liquid side piping (supplied).

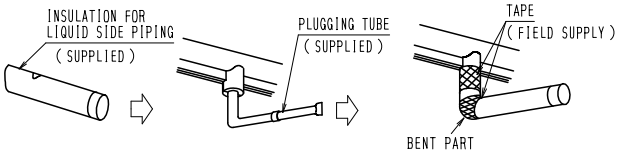

INSTALLATION PROCEDURE

- Do not apply extra force on the piping part. The brazed part may be damaged and it may result in gas leakage.

SUCTION/DISCHARGE GAS SIDE HEADER

- Place the header on the pedestal and install it so that it is horizontal.

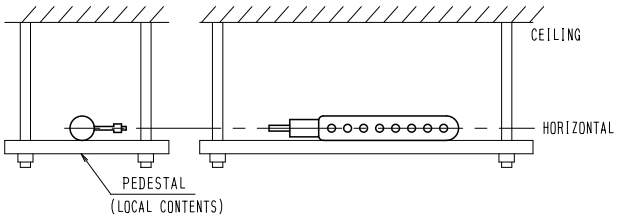

LIQUID SIDE HEADER

- Suspend the header from the ceiling, and be sure to install it so that the outlet/inlet pipings at the header indoor unit side are horizontal at the lower side as shown below.

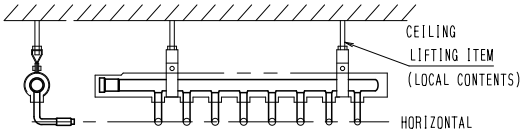

3P113623D

4. REFNET Joint

4.1 KHRJ26K11 / 17 / 18 / 37 / 40 / 75T

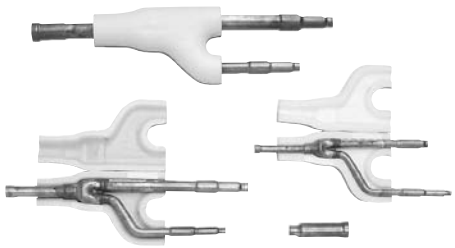

- Includes insulation. Makes it easy to insulate complicated branch points in no time flat.
- Connecting parts have already been expanded. Brazing is finished in a flash.

Dimensions

Model \ Dimensions	A	B	C	D	E	F
KHRJ26K11T	250	290	80	298	338	80
KHRJ26K17T	250	290	80	320	360	80
KHRJ26K18T	250	290	80	298	338	80
KHRJ26K37T	290	332	80	448	503	80
KHRJ26K40T	400	438	90	534	634	93
KHRJ26K75T	409	323	90	607	721	80

Unit (mm)

Liquid side joint

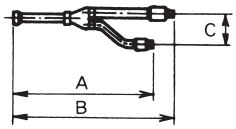

Gas side joint

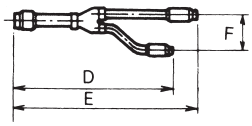

This graph above shows KHRJ26K11T.

Item \ Model			KHRJ26K11T	KHRJ26K17T	KHRJ26K18T	KHRJ26K37T	KHRJ26K40T	KHRJ26K75T
Connection pipe diameter	Liquid side use	Joint (with insulation)	ϕ6.4 ϕ9.5 ϕ9.5	ϕ6.4 ϕ9.5	ϕ6.4 ϕ6.4 ϕ9.5 ϕ9.5 ϕ9.5	ϕ 9.5 ϕ 6.4 ϕ12.7 ϕ 9.5 ϕ12.7 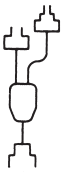 ϕ12.7 ϕ15.9	ϕ12.7 ϕ 9.5 ϕ15.9 ϕ15.9 ϕ19.1 ϕ19.1 ϕ19.1 ϕ15.9	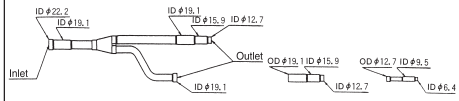
	Gas - side use	Joint (with insulation)	ϕ12.7 ϕ12.7 ϕ15.9 ϕ15.9 ϕ19.1 ϕ15.9	ϕ15.9 ϕ12.7 ϕ19.1 ϕ15.9 ϕ19.1 ϕ22.2	ϕ12.7 ϕ12.7 ϕ15.9 ϕ15.9 ϕ19.1 ϕ19.1 ϕ15.9	ϕ15.9 ϕ12.7 ϕ19.1 ϕ15.9 ϕ25.4 ϕ19.1 ϕ25.4 ϕ28.6 ϕ31.8	ϕ25.4 ϕ15.9 ϕ28.6 ϕ19.1 ϕ31.8 ϕ25.4 ϕ31.8 ϕ38.1	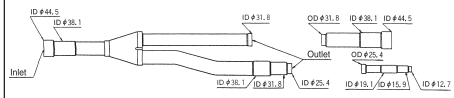
		Reducer	—	—	—	ϕ19.1→ϕ25.4 ϕ25.4→ϕ28.6	ϕ 9.5→ϕ 6.4 ϕ15.9→ϕ12.7 ϕ25.4→ϕ28.6 ϕ31.8→ϕ38.1	Liquid side : ϕ12.7→ϕ15.9→ϕ19.1, ϕ6.4→ϕ9.5→ϕ12.7 Gas side : ϕ31.8→ϕ38.1→ϕ31.8, ϕ12.7→ϕ15.9$→ϕ19.1→ϕ25.4
Material			Polypropylene					
Insulation temperature			120˚C					
Color			White					
Component parts			Liquid - side joint, Gas - side joint, Insulation, Installation manual			Liquid - side joint, Gas - side joint, Insulation, Reducer, Installation manual		

KHRJ26K11T

Unit (mm)

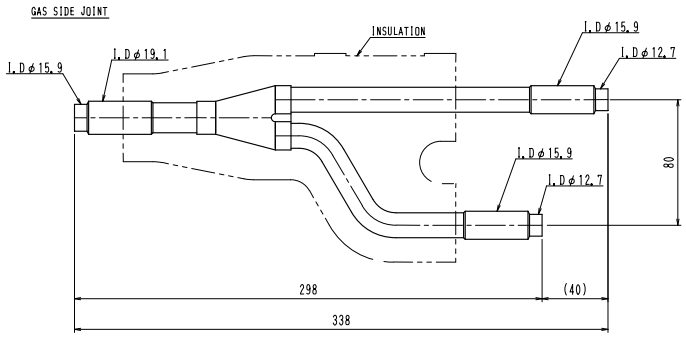

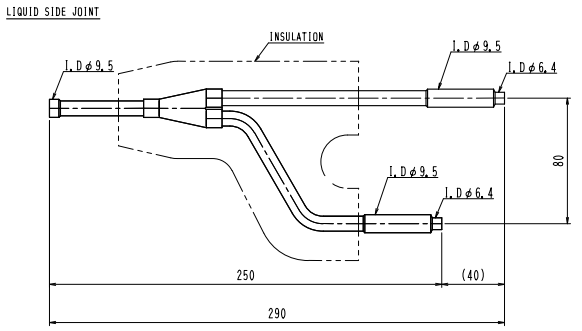

D3K1239A

KHRJ26K17T

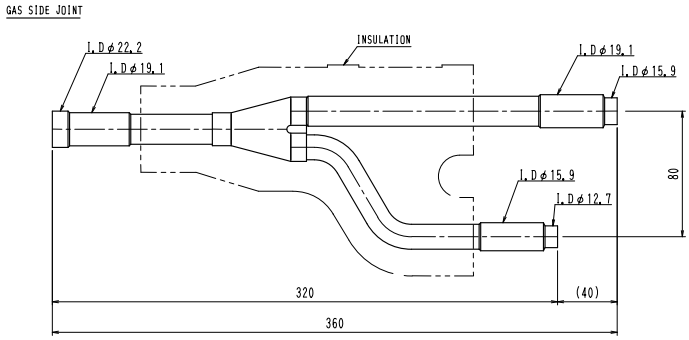

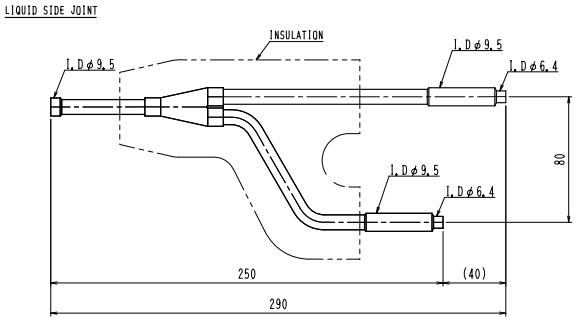

D3K1209A

KHRJ26K18T

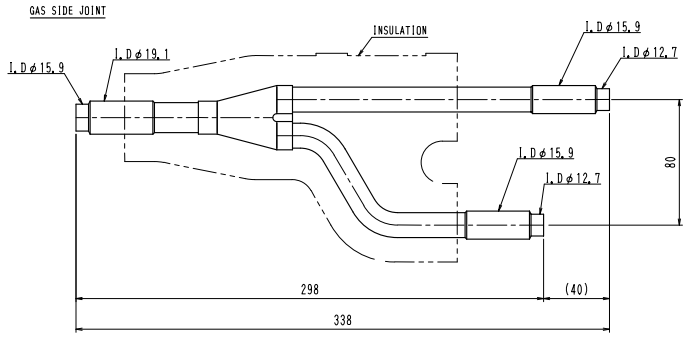

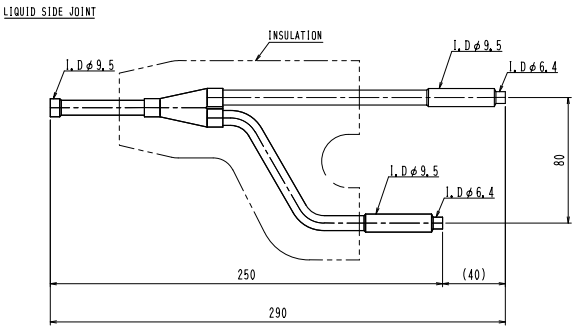

D3K1241A

KHRJ26K37T

Unit (mm)

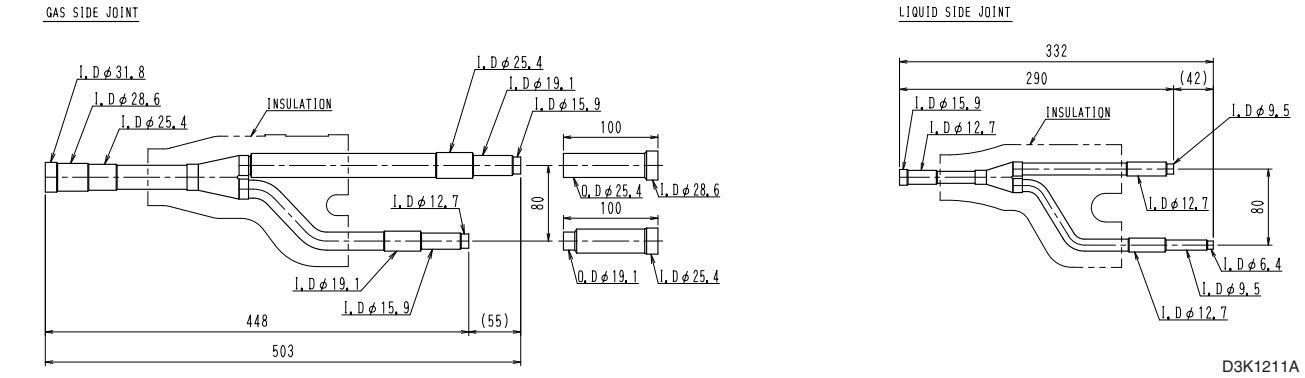

KHRJ26K40T

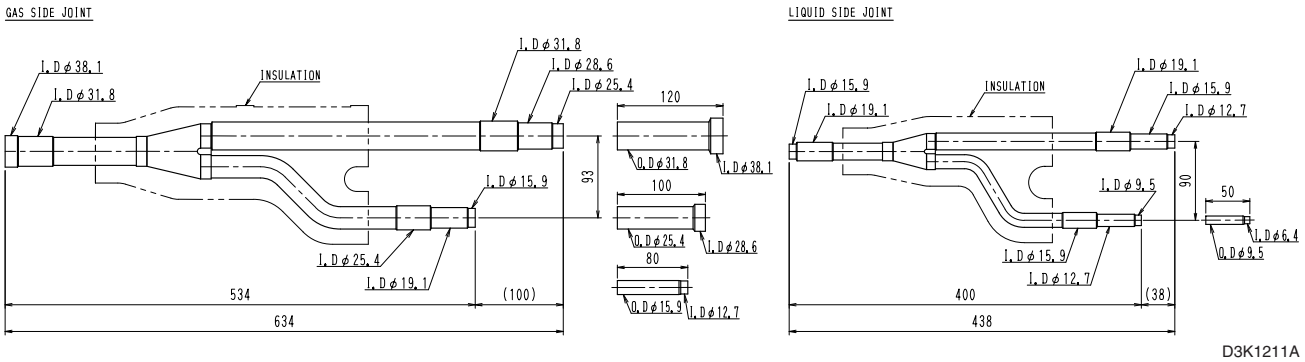

KHRJ26K75T

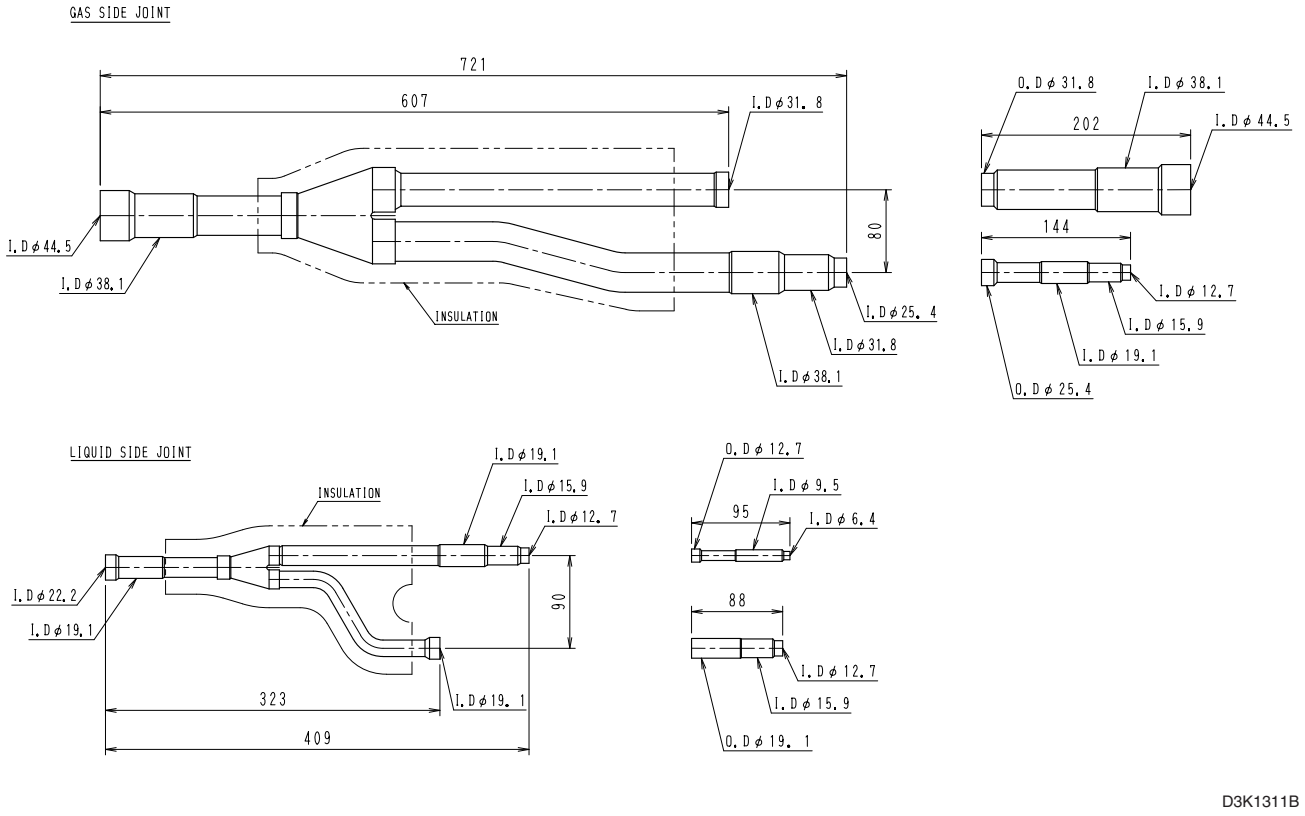

4.1.1 KHRJ26K11 / 17T

REFNET JOINT INSTALLATION MANUAL (EXCEPT FOR JAPAN)

KHRJ26K17T
KHRJ26K11T

■ THIS KIT INCLUDES THE FOLLOWING PARTS.

KHRJ26K17T				KHRJ26K11T			
GAS SIDE JOINT	LIQUID SIDE JOINT	INSULATION	TAPE	GAS SIDE JOINT	LIQUID SIDE JOINT	INSULATION	TAPE
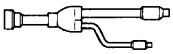	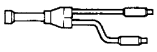	(Gas side/liquid side) 2 pcs.	8 sheets.	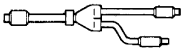	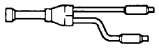	(Gas side/liquid side) 2 pcs.	8 sheets.

■ SELECTION PROCEDURE

① **According to the following procedure, use KHRJ26K17T and KHRJ26K11T properly.**

- Total the capacity of indoor unit in the downstream from its JOINT and sclect the kit from the table below.

INDOOR UNIT TOTAL CAPACITY	KIT NAME
Less than 100	KHRJ26K11T
Not less than 100	KHRJ26K17T

- For the model name of indoor unit which can be combined, refer to the installation manual attached to the product.

(Find the indoor unit capacity by calculation from the nominal capacity indicated on the model name according to the table below.)

INDOOR UNIT MODEL NO.	CAPACITY
Type 20	20
Type 25	25
Type 32	31.25
Type 40	40
Type 50	50
Type 63	62.5
Type 80	80
Type 100	100
Type 125	125

② **According to the following procedure, determine the piping size at each part.**

- Connect between the outdoor unit and the first JOINT according to the pipe size of the outdoor unit.
  ex) For RSXY5HY1 Gas pipe size:ϕ19.1
  Liquid pipe size:ϕ9.5
- Total the capacity of indoor unit in the downstream and select the size between JOINTS from the table below.

INDOOR UNIT TOTAL CAPACITY	GAS PIPE SIZE	LIQUID PIPE SIZE
LESS THAN 100	ϕ15.9	ϕ9.5
NOT LESS THAN 100	ϕ19.1	ϕ9.5

- Connect between the JOINT and indoor unit according to the indoor unit connection size.

INDOOR UNIT NOMINAL CAPACITY	GAS PIPE SIZE	LIQUID PIPE SIZE
Type 20,25,32,40	ϕ12.7	ϕ6.4
Type 50,63,80	ϕ15.9	ϕ9.5
Type 100,125	ϕ19.1	ϕ9.5

REFRIGERANT PIPING CONNECTION EXAMPLE	JOINT SELECTION PROCEDURE	PIPING SIZE SELECTION PROCEDURE
CONNECTION EXAMPLE A REFNET JOINT OUTDOOR UNIT A B C D INDOOR UNIT 40 40 25 25 25 The figure in □ indicates the indoor unit capacity.	A: Total capacity of indoor unit in the downstream ⇨ KHRJ26K17T 40+40+25+25+25=155>100 B: Total capacity of indoor unit in the downstream ⇨ KHRJ26K17T 40+25+25+25=115>100 C: Total capacity of indoor unit in the downstream ⇨ KHRJ26K11T 25+25+25=75<100 D: Total capacity of indoor unit in the downstream ⇨ KHRJ26K11T 25+25=50<100	• Between JOINT (A) and (B): Total capacity of indoor unit in the downstream 40+25+25+25=115>100 ⇨ Gas side piping ϕ19.1 Liquid side piping ϕ9.5 • Between JOINT (B) and (C): Total capacity of indoor unit in the downstream 25+25+25=75<100 ⇨ Gas side piping ϕ15.9 Liquid side piping ϕ9.5 • Between JOINT (C) and (D): Total capacity of indoor unit in the downstream 25+25=50<100 ⇨ Gas side piping ϕ15.9 Liquid side piping ϕ9.5 • Between JOINT (A ~ D) and indoor unit: As per indoor unit connection size ⇨ Gas side piping Liquid side piping As per the table above.
CONNECTION EXAMPLE B REFNET JOINT OUTDOOR UNIT B C A D 40 40 25 INDOOR UNIT 25 25 The figure in □ indicates the indoor unit capacity.	A: Total capacity of indoor unit in the downstream ⇨ KHRJ26K17T 40+40+25+25+25=155>100 B: Total capacity of indoor unit in the downstream ⇨ KHRJ26K17T 40+40+25=105>100 C: Total capacity of indoor unit in the downstream ⇨ KHRJ26K11T 40+25=65<100 D: Total capacity of indoor unit in the downstream ⇨ KHRJ26K11T 25+25=50<100	• Between JOINT (A) and (B): Total capacity of indoor unit in the downstream 40+40+25=105>100 ⇨ Gas side piping ϕ19.1 Liquid side piping ϕ9.5 • Between JOINT (B) and (C): Total capacity of indoor unit in the downstream 40+25=65<100 ⇨ Gas side piping ϕ15.9 Liquid side piping ϕ9.5 • Between JOINT (A) and (D): Total capacity of indoor unit in the downstream 25+25=50<100 ⇨ Gas side piping ϕ15.9 Liquid side piping ϕ9.5 • Between JOINT (B ~ D) and indoor unit: As per indoor unit connection size ⇨ Gas side piping Liquid side piping As per the table above.

■ INSTALLATION PROCEDURE

For KHRJ26K17T

① **GAS SIDE JOINT**

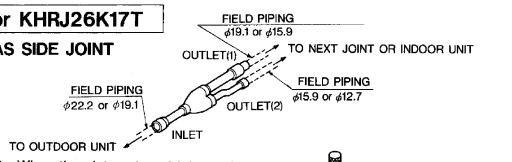

Note: When the piping size of inlet is ϕ19.1, piping size of outlet(1) is ϕ19.1 or piping size of outlet(2) is ϕ15.9, cut the pipe with a pipe cutter for use.

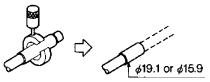

② **LIQUID SIDE JOINT**

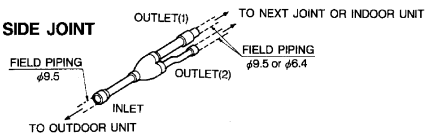

Note: When the piping size of outlet is ϕ9.5 cut the pipe with a pipe cutter for use.

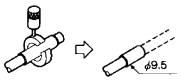

For KHRJ26K11T

① **GAS SIDE JOINT**

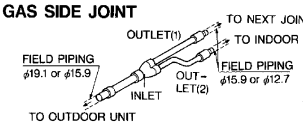

Note: When the piping size of inlet is ϕ19.1 or the piping size of outlet is ϕ15.9, cut the pipe with a pipe cutter for use.

② **LIQUID SIDE JOINT**

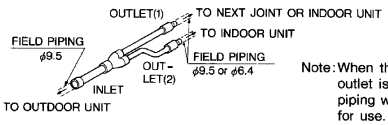

Note: When the piping size of outlet is ϕ9.5, cut the piping with a pipe cutter for use.

■ INSTALLATION PRECAUTIONS

① **INSTALL THE JOINT SO THAT IT IS BRANCHED VERTICALLY OR HORIZONTALLY.**

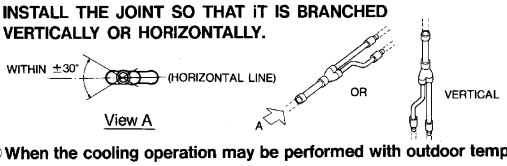

③ **When the cooling operation may be performed with outdoor temperature 15°C or under, also insulate the liquid side.**

② **BE SURE TO INSULATE THE GAS SIDE JOINT.**

- Seal the insulation and field piping heat insulation joint with the supplied tape.

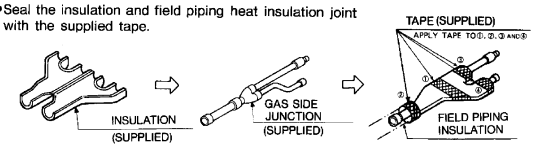

3P234462

4.1.2 KHRJ26K18 / 37 / 40T

Installation Manual

REFNET JOINT INSTALLATION MANUAL (Except for JAPAN) KHRJ26K18T・37T・40T

■ THIS KIT INCLUDES THE FOLLOWING PARTS.

KIT NAME	SHAPE							
	GAS SIDE JOINT	LIQUID SIDE JOINT	INSULATION	TAPE	REDUCER			
KHRJ26K18T			(Gas side/ Liquid side) 2 pcs.	8 sheets				
KHRJ26K37T			(Gas side/ Liquid side) 2 pcs.	8 sheets	φ25.4	φ28.6		
KHRJ26K40T			(Gas side/ Liquid side) 2 pcs.	8 sheets	φ28.6	φ38.1	φ12.7	φ6.4

SELECTION PROCEDURE

①According to the following procedure.

- First branch counted from the outdoor unit(Type8, 10), use KHRJ26K37T.
- When using REFNET joint on the first branch counted from the function unit side. If system capacity is less than 640, use KHRJ26K40T + KHRJ26K40TP.

- Next JOINT, total the capacity of indoor unit in the downstream from it is JOINT and select the kit from the table 1.
- For the model name of indoor unit which can be combined, refer to the installation manual attached to the product.

(Table 1)

INDOOR UNIT TOTAL CAPACITY	KIT NAME
Less than 160	KHRJ26K18T
Not less than 160, less than 330	KHRJ26K37T
Not less than 330	KHRJ26K40T
	KHRJ26K40TP

(Find the indoor unit capacity by calculation from the nomina capacity indicated on the mode name according to the table 2.

(Table 2)

INDOOR UNIT NOMINAL CAPACITY	CAPACITY
Type 20	20
Type 25	25
Type 32	31.25
Type 40	40
Type 50	50
Type 63	62.5
Type 80	80
Type 100	100
Type 125	125
Type 200	200
Type 250	250

② According to the folloing procedure, determine the piping size at each part.

- Connect between the outdoor unit and the first JOINT according to the outdoor unit connection size.

(Table 3) (Unit:mm)

OUTDOOR UNIT	LIQUID PIPE SIZE	GAS PIPE SIZE
Type 8(HP)	φ12.7	φ25.4
Type 10(HP)	φ12.7	φ28.6

- Connect between the function unit and the first JOINT according to the function unit connection size.

(Table 3) (Unit:mm)

OUTDOOR SYSTEM NAME	LIQUID PIPE SIZE	GAS PIPE SIZE
RXY16K	φ15.9	φ34.9
RXY18～20K	φ19.1	φ34.9
RXY24K	φ19.1	φ41.3

- Total the capacity of indoor unit in the downstream and select the size between JOINTS from the table 4.

(Table 4) (Unit:mm)

INDOOR UNIT TOTAL CAPACITY	LIQUID PIPE SIZE	GAS PIPE SIZE
Less than 100	φ9.5	φ15.9
Not less than 100, less than 160	φ9.5	φ19.1
Not less than 160, less than 330	φ12.7	φ25.4
Not less than 330, less than 480	φ15.9	φ34.9
Not less than 480, less than 640	φ19.1	φ34.9
Not less than 640	φ19.1	φ41.3

- Connect between the JOINT and indoor unit according to the indoor unit connection size.

(Table 5) (Unit:mm)

INDOOR UNIT NOMINALCAPACITY	LIQUID PIPE SIZE	GAS PIPE SIZE
Types 20・25・32・40	φ6.4	φ12.7
Types 50・63・80	φ9.5	φ15.9
Types 100・125	φ9.5	φ19.1
Types 200	φ12.7	φ25.4
Types 250	φ12.7	φ28.6

REFRIGERANT PIPING CONNECTION EXAMPLE

CONNECTION EXAMPLE

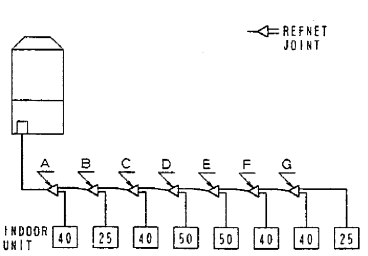

The figure in □ indicates the indoor unit capacity.

JUNCTION SELECTION PROCEDURE

A : First JOINT→KHRJ26K37T

B : Total capacity of indoor unit in the downstream→KHRJ26K37T
25+40+50+50+40+40+25=270<330

C : Total capacity of indoor unit in the downstream→KHRJ26K37T
40+50+50+40+40+25=245<330

D : Total capacity of indoor unit in the downstream→KHRJ26K37T
50+50+40+40+25=205<330

E : Total capacity of indoor unit in the downstream→KHRJ26K18T
50+40+40+25=155<160

F : Total capacity of indoor unit in the downstream→KHRJ26K18T
40+40+25=105<160

G : Total capacity of indoor unit in the downstream→KHRJ26K18T
40+25=65<160

PIPING SIZE SELECTION PROCEDURE

- Between outdoor unit and first JOINT (A) — As per outdoor unit connection size → Gas/liquid side piping:As per the table 3.
- Between JOINT (A) AND (B) — Total capacity of indoor unit in the downstream 25+40+50+50+40+40+25=270<330 → Gas side piping: φ25.4 Liquid side piping: φ12.7
- Between JOINT (B) AND (C) — Total capacity of indoor unit in the downstream 40+50+50+40+40+25=245<330 → Gas side piping: φ25.4 Liquid side piping: φ12.7
- Between JOINT (C) AND (D) — Total capacity of indoor unit in the downstream 50+50+40+40+25=205<330 → Gas side piping: φ25.4 Liquid side piping: φ12.7
- Between JOINT (D) AND (E) — Total capacity of indoor unit in the downstream 50+40+40+25=155<160 → Gas side piping: φ19.1 Liquid side piping: φ9.5
- Between JOINT (E) AND (F) — Total capacity of indoor unit in the downstream 40+40+25=105<160 → Gas side piping: φ19.1 Liquid side piping: φ9.5
- Between JOINT (F) AND (G) — Total capacity of indoor unit in the downstream 40+25=65<160 → Gas side piping: φ15.9 Liquid side piping: φ9.5
- Between JOINT (A-G) and indoor unit — As per indoor unit connection size → Gas side piping Liquid side piping: As per the table 5.

3P234463

INSTALLATION PROCEDURE

① The pipe size of each parts are shown below.

KIT NAME	GAS SIDE JOINT	LIQUID SIDE JOINT
KHRJ26K18T	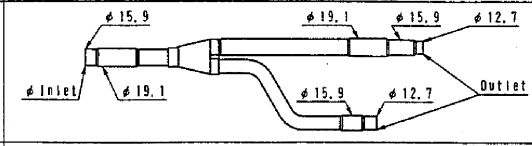	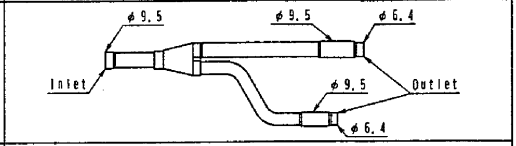
KHRJ26K37T	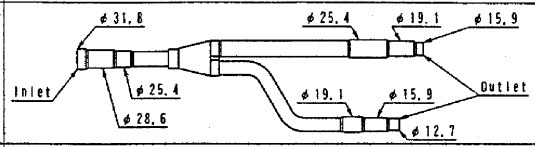	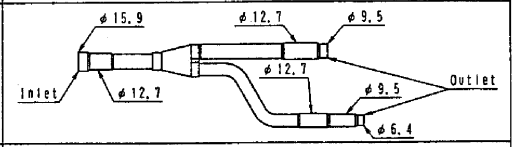
KHRJ26K40T	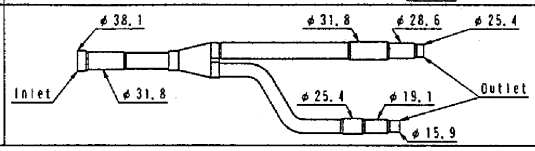	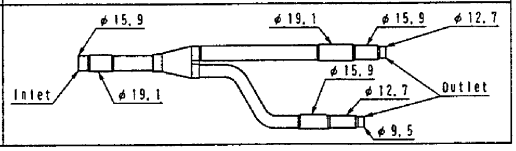

② According to SELECTION PROCEDURE cut the pipe with a pipe cutter for use.

- When the liquid side pipe size of outlet is ϕ19.1.
- When the gas side pipe size of outlet is ϕ34.9.

(KHRJ26K40T)

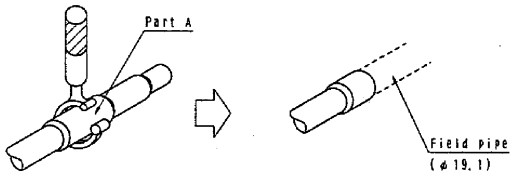

(Cut part A and connect a field pipe.)

(KHRJ26K40T)

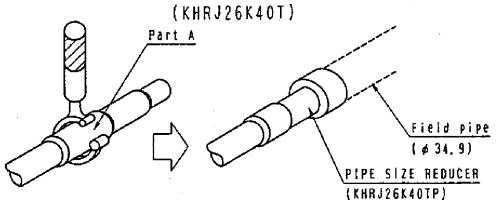

(Cut part A (ϕ31.8) and use PIPE SIZE REDUCER.)

- When cutting the inlet/outlet pipes with a pipe cutter, be sure to cut the center of the pipe connections to be cut.

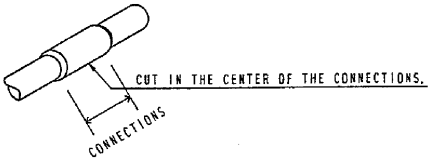

③ Insulation of JOINT

GAS SIDE

- Be sure to insulate the gas side JOINT and the liquid side JOINT.
- Seal the insulation and field piping insulation joint with the supplied tape.

LIQUID SIDE

- For HEAT RECOVER SERIES
  Be sure to insulate the liquid side JOINT.
- When the cooling operation may be performed in outdoor temperature 15° C, also insulate the liquid side.

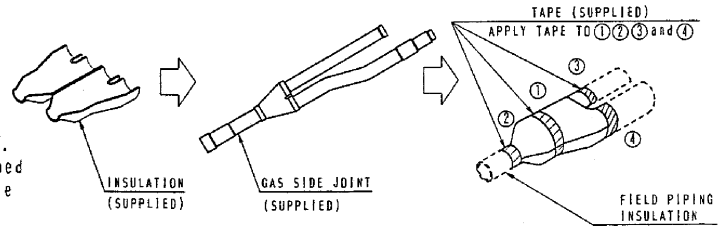

INSTALLATION PRECAUTIONS

- Install the JOINT so that it is branched vertically or horizontally.

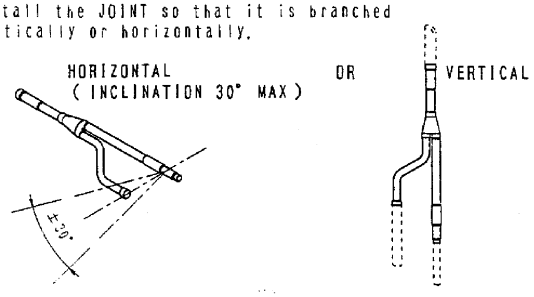

3P234463

4.1.3 KHRJ26K75T

Installation Manual

REFNET JOINT INSTALLATION MANUAL (Except for JAPAN) KHRJ26K75T

■ THIS KIT INCLUDES THE FOLLOWING PARTS.

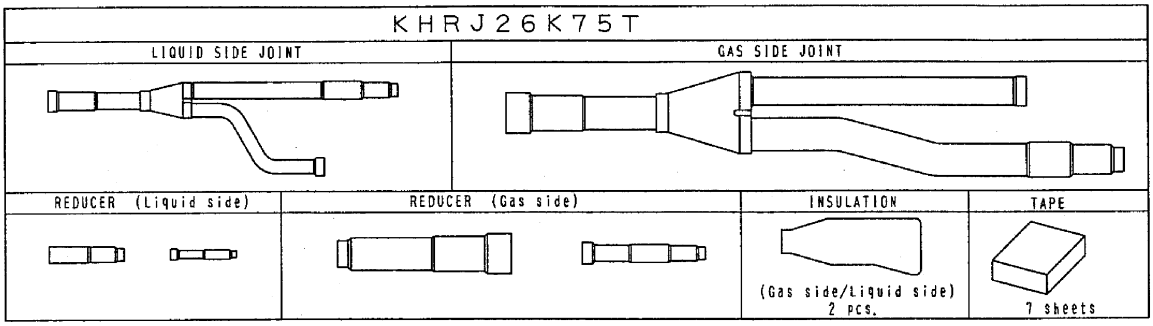

SELECTION PROCEDURE

①According to the following procedure.

- When using REFNET joint on the first branch counted from the function unit side.
  If system capacity is less than 640, use KHRJ26K40T + KHRJ26K40TP.
  If system capacity is 640 or greater, use KHRJ26K75T + KHRJ26K75TP.
- Next JOINT, total the capacity of indoor unit in the downstream from it is JOINT and select the kit from the table 1.

(Table 1)

INDOOR UNIT TOTAL CAPACITY	KIT NAME
Less than 100	KHRJ26K11T
Not less than 100, less than 160	KHRJ26K18T
Not less than 160, less than 330	KHRJ26K37T
Not less than 330, less than 640	KHRJ26K40T + KHRJ26K40TP
Not less than 640	KHRJ26K75T + KHRJ26K75TP

(Find the indoor unit capacity by calculation from the nominal capacity indicated on the model name according to the table 2.)

(Table 2)

INDOOR UNIT NOMINAL CAPACITY	CAPACITY
Type 20	20
Type 25	25
Type 32	31.25
Type 40	40
Type 50	50
Type 63	62.5
Type 80	80
Type 100	100
Type 125	125
Type 200	200
Type 250	250

② According to the folloing procedure, determine the piping size at each part.

- Select the pipe size between function unit and the first JOINT from the table 3.

(Table 3) (Unit:mm)

OUTDOOR SYSTEM NAME	LIQUID PIPE SIZE	GAS PIPE SIZE
RXY16K	φ15.9	φ34.9
RXY18～20K	φ19.1	φ34.9
RXY24K	φ19.1	φ41.3
RXY26～30K	φ22.2	φ41.3

- Total the capacity of indoor unit in the downstream and select the size between JOINTS from the table 4.

(Table 4) (Unit:mm)

INDOOR UNIT TOTAL CAPACITY	LIQUID PIPE SIZE	GAS PIPE SIZE
Less than 100	φ9.5	φ15.9
Not less than 100, less than 160	φ9.5	φ19.1
Not less than 160, less than 330	φ12.7	φ25.4
Not less than 330, less than 480	φ15.9	φ34.9
Not less than 480, less than 640	φ19.1	φ34.9
Not less than 640	φ19.1	φ41.3

- Connect between the JOINT and indoor unit according to the indoor unit connection size.

(Table 5) (Unit:mm)

INDOOR UNIT NOMINALCAPACITY	LIQUID PIPE SIZE	GAS PIPE SIZE
Types 20・25・32・40	φ6.4	φ12.7
Types 50・63・80	φ9.5	φ15.9
Types 100・125	φ9.5	φ19.1
Types 200	φ12.7	φ25.4
Types 250	φ12.7	φ28.6

REFRIGERANT PIPING CONNECTION EXAMPLE

OUTDOOR SYSTEM NAME:RXY30K

system capacity:770

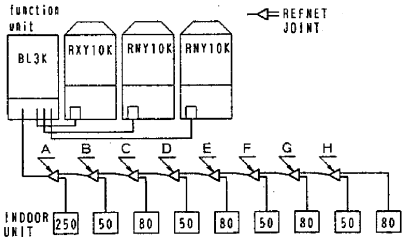

The figure in □ indicates the indoor unit capacity.

JUNCTION SELECTION PROCEDURE

A : First JOINT→KHRJ26K75T

B : Total capacity of indoor unit in the downstream→KHRJ26K40T
50+80+50+80+50+80+50+80=520<640

C : Total capacity of indoor unit in the downstream→KHRJ26K40T
80+50+80+50+80+50+80=470<640

D : Total capacity of indoor unit in the downstream→KHRJ26K40T
50+80+50+80+50+80=390<640

E : Total capacity of indoor unit in the downstream→KHRJ26K40T
80+50+80+50+80=340<640

F : Total capacity of indoor unit in the downstream→KHRJ26K37T
50+80+50+80=260<330

G : Total capacity of indoor unit in the downstream→KHRJ26K37T
80+50+80=210<330

G : Total capacity of indoor unit in the downstream→KHRJ26K18T
50+80=130<160

PIPING SIZE SELECTION PROCEDURE

- Between function unit and first JOINT (A): As per function unit connection size → Gas/liquid side piping: As per the table 3.
- Between JOINT (A) AND (B): Total capacity of indoor unit in the downstream 50+80+50+80+50+80+50+80=520<640 → Gas side piping: φ34.9; Liquid side piping: φ19.1
- Between JOINT (B) AND (C): Total capacity of indoor unit in the downstream 80+50+80+50+80+50+80=470<480 → Gas side piping: φ34.9; Liquid side piping: φ15.9
- Between JOINT (C) AND (D): Total capacity of indoor unit in the downstream 50+80+50+80+50+80=390<480 → Gas side piping: φ34.9; Liquid side piping: φ15.9
- Between JOINT (D) AND (E): Total capacity of indoor unit in the downstream 80+50+80+50+80=340<480 → Gas side piping: φ34.9; Liquid side piping: φ15.9
- Between JOINT (E) AND (F): Total capacity of indoor unit in the downstream 50+80+50+80=260<330 → Gas side piping: φ25.4; Liquid side piping: φ12.7
- Between JOINT (F) AND (G): Total capacity of indoor unit in the downstream 80+50+80=210<330 → Gas side piping: φ25.4; Liquid side piping: φ12.7
- Between JOINT (G) AND (H): Total capacity of indoor unit in the downstream 50+80=130<160 → Gas side piping: φ19.1; Liquid side piping: φ9.5
- Between JOINT (A～H) and indoor unit: As per indoor unit connection size → Gas/liquid side piping: As per the table 5.

3P234468

INSTALLATION PROCEDURE

① The pipe size of each parts are shown below.

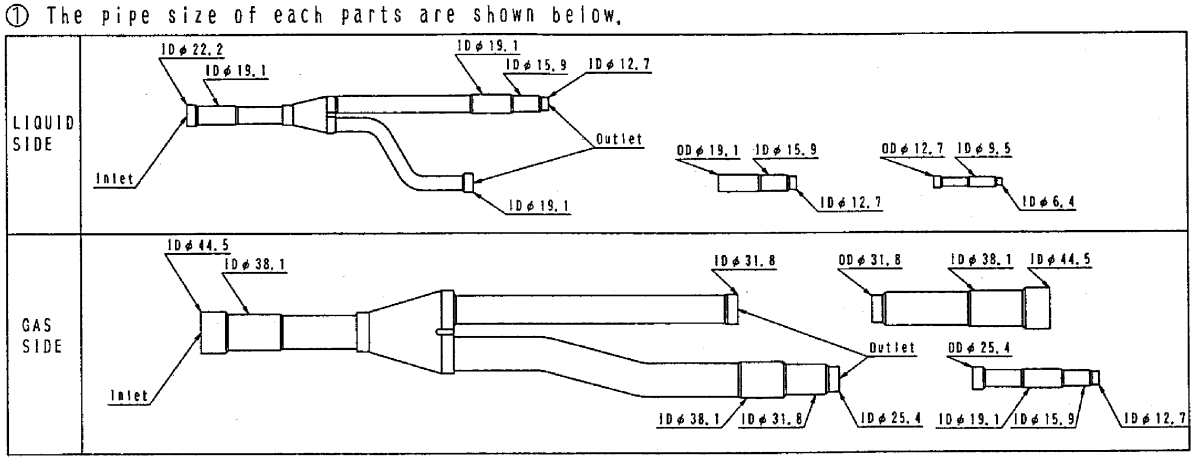

② According to SELECTION PROCEDURE cut the pipe with a pipe cutter for use.

- When the liquid side pipe size of outlet is φ 19.1.

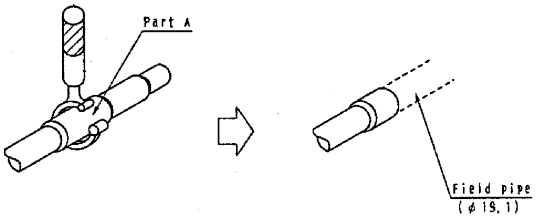

(Cut part A and connect a field pipe.)

- When the gas side pipe size of outlet is φ 41.3.

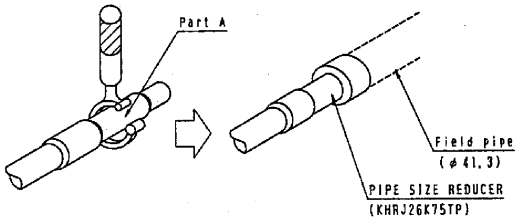

(Cut part A (φ 31.8) and use PIPE SIZE REDUCER.)

- When cutting the inlet/outlet pipes with a pipe cutter, be sure to cut the center of the pipe connections to be cut.

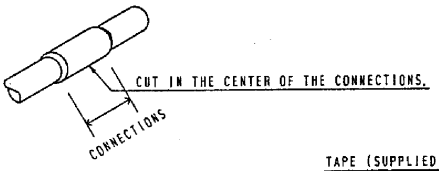

③ Insulation of JOINT

- Be sure to insulate the gas side JOINT and the liquid side JOINT.
- Seal the insulation and field piping insulation joint with the supplied tape.

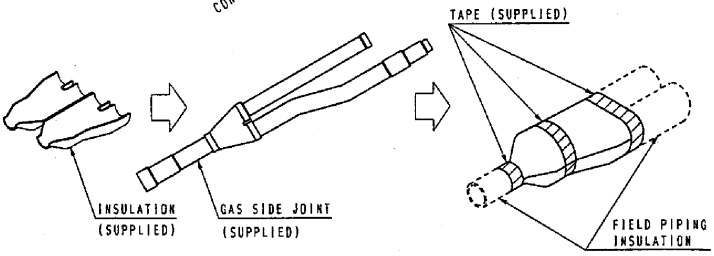

INSTALLATION PRECAUTIONS

- Install the JOINT so that it is branched vertically or horizontally.

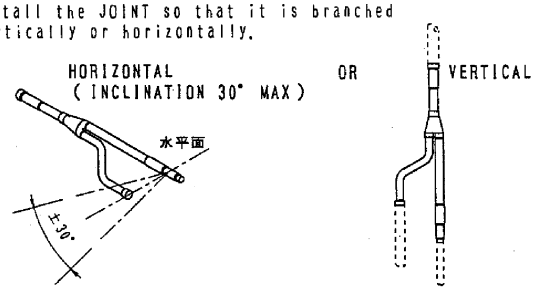

- Fix the field piping, and be sure to put clamp position apart from JOINT (more than 1m).

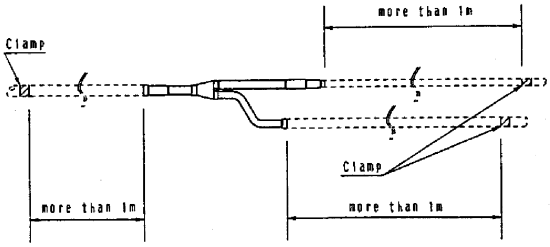

3P234468

4.2 KHRP26A22 / 33 / 72 / 73T

KHRP26A22T

Unit (mm)

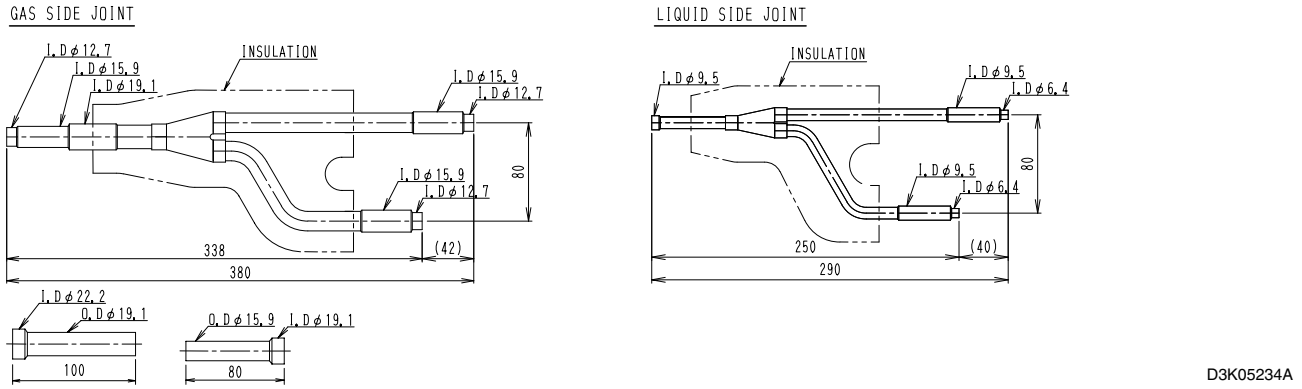

KHRP26A33T

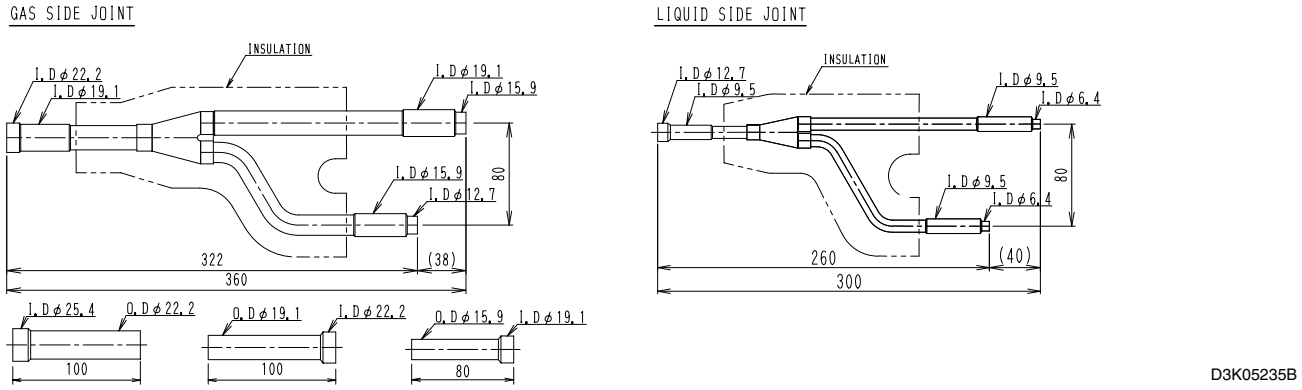

KHRP26A72T

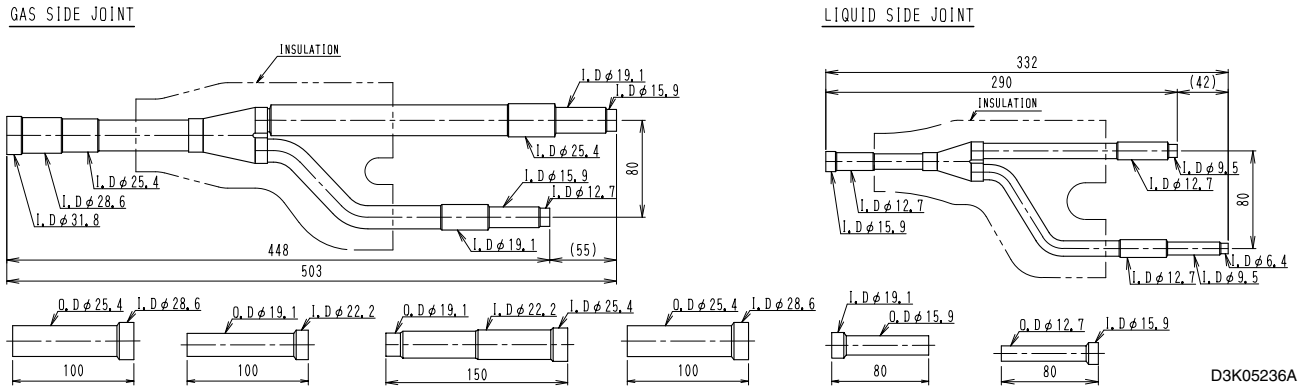

KHRP26A73T

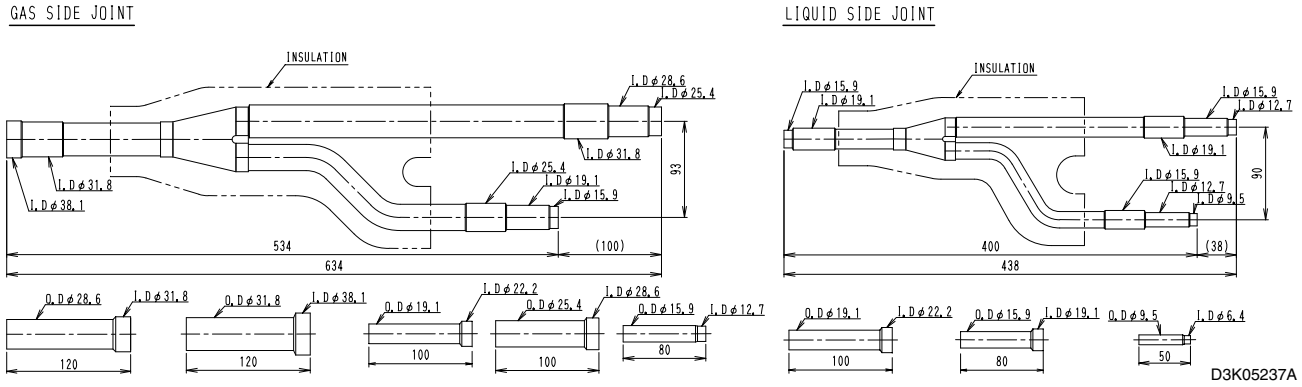

Installation Manual

REFNET JOINT INSTALLATION MANUAL(Except for JAPAN)
KHRP26A22T・33T・72T・73T(FOR R410A)

■ THIS KIT INCLUDES THE FOLLOWING PARTS.

KIT NAME	SHAPE				
	GAS SIDE JOINT	LIQUID SIDE JOINT	INSULATION	REDUCER(FOR GAS PIPE)	REDUCER(FOR LIQUID PIPE)
KHRP26A 22T	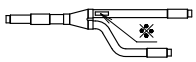	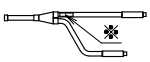	2 pcs.	φ19.1 φ22.2	
KHRP26A 33T	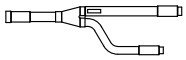	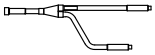	2 pcs.	φ19.1 φ22.2 φ25.4	
KHRP26A 72T		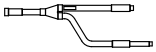	2 pcs.	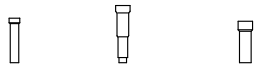 φ22.2 φ25.4/φ22.2 φ28.6 2 PCS.	φ15.9 φ19.1
KHRP26A 73T	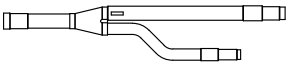	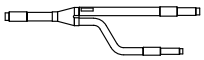	2 pcs.	φ12.7 φ22.2 φ28.6 φ31.8 φ38.1	φ6.4 φ19.1 φ22.2

※…Make sure gas side joint and liquid side joint are for R410A. (Label for R410A is attached on each part.)

SELECTION PROCEDURE

According to the INSTALLATION MANUAL of outdoor unit.

INSTALLATION PROCEDURE

❶ The pipe size of each parts are shown below.

KIT NAME	GAS SIDE JOINT	LIQUID SIDE JOINT
KHRP26A 22T	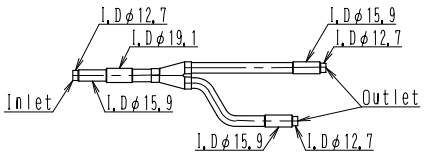	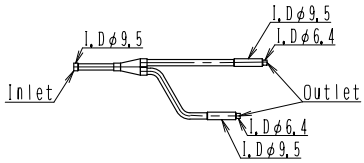
KHRP26A 33T	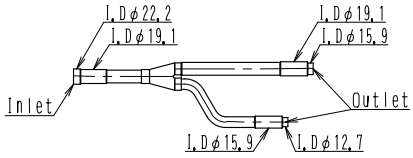	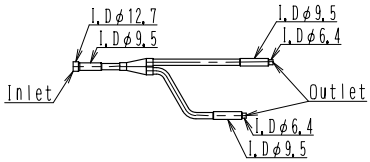
KHRP26A 72T	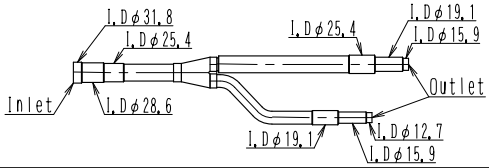	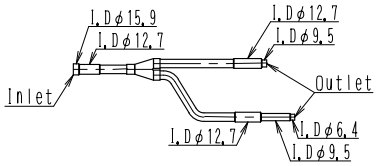
KHRP26A 73T	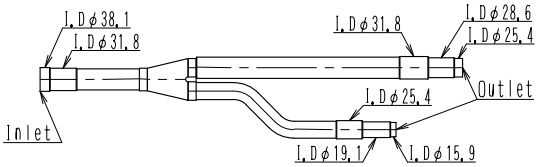	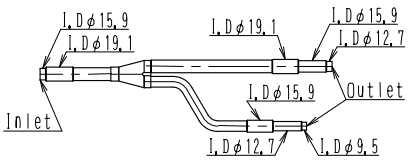

2P182411

4

❷ According to SELECTION PROCEDURE, cut the pipe with a pipe cutter for use.

• (Ex.) FOR KHRP26A33T

Note)For the size of inlet is φ19.1 or the size of outlet(1) is φ19.1, the size of outlet(2) is φ15.9.
• Cut the pipe with a pipe cutter.

Note)For the size of outlet(1) is φ22.2 or the size of outlet(2) is φ19.1.

Note)For the size of inlet is φ9.5 or the size of outlet(1) is φ9.5, the size of outlet(2) is φ9.5.
• Cut the pipe with a pipe cutter.

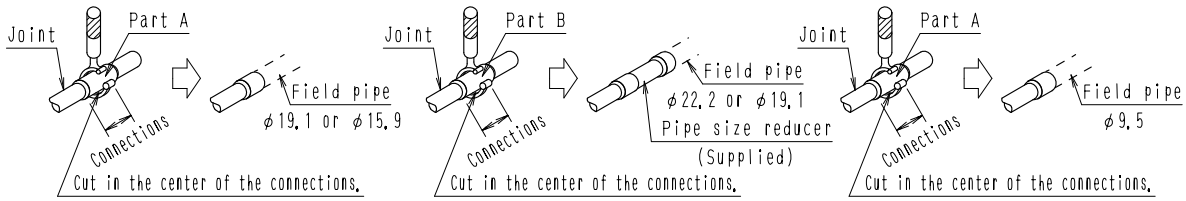

Cut in the center of the part A and connect a field pipe.

Cut in the center of the part B, use Pipe size reducer (supplied) and connect a field pipe.

Cut in the center of the part A and connect a field pipe.

• Make sure to flow nitrogen gas through the pipe when brazing.

❸ Insulation of Joint

Be sure to insulate the gas and liquid side Joint.

Note) The insulation of the refrigerant piping must be reinforced based on the environment of installation. Otherwise, dew may condensate on the surface of the insulation. For details, see Engineering Data.

GAS SIDE
• Set the insulation matching the joint and wind the field supplied tape from the center without any clearances on the matching face of insulation.
• Seal the insulation and field piping insulation joint with the field supplied tape.

LIQUID SIDE
• Insulate by the same method as gas side joint.

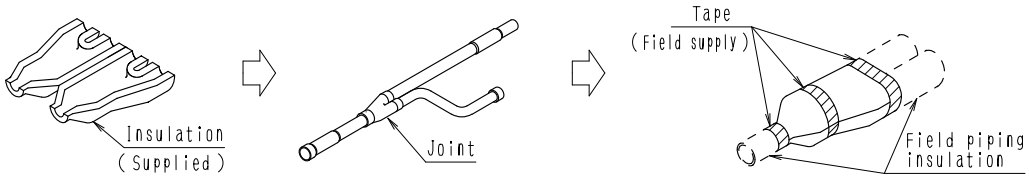

INSTALLATION PRECAUTIONS

• Install the Joint so that it is branched vertically or horizontally.

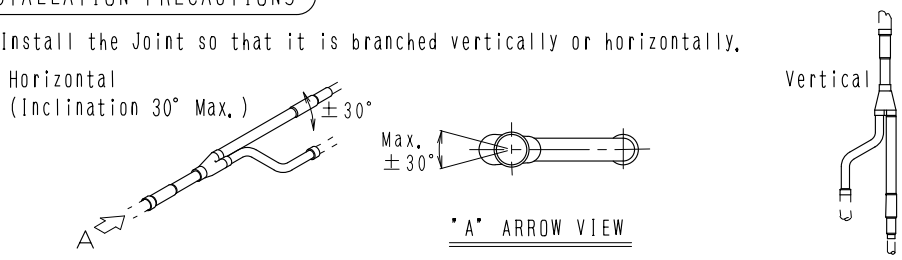

• Do not apply extra force on the piping part. The brazed part may be damaged and it may result in gas leakage.

2P182411

4.3 KHRP25A22 / 33 / 72 / 73T

KHRP25A22T

Unit (mm)

GAS SIDE JOINT

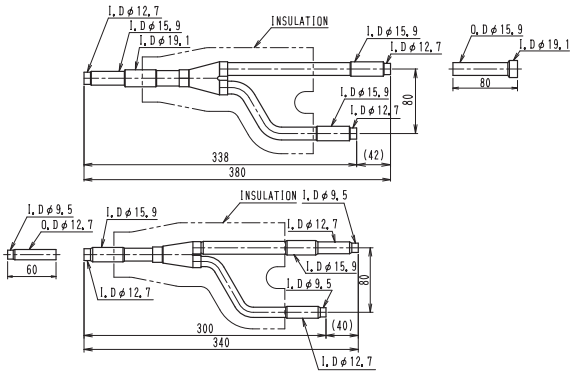

LIQUID SIDE JOINT

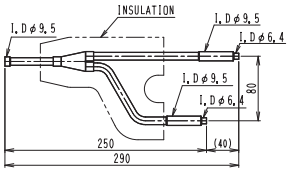

D3K05706

KHRP25A33T

GAS SIDE JOINT

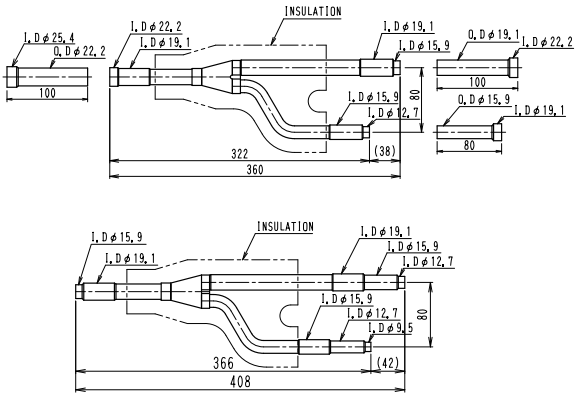

LIQUID SIDE JOINT

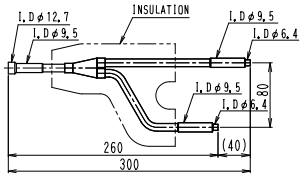

D3K05707

KHRP25A72T

GAS SIDE JOINT

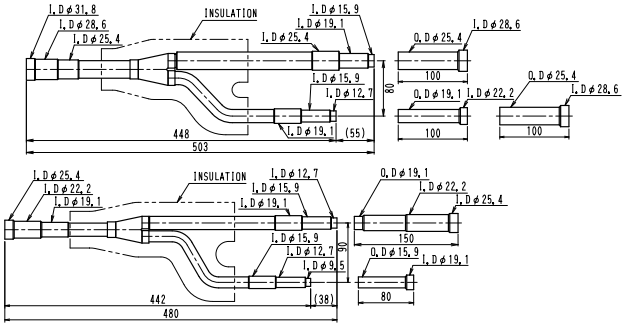

LIQUID SIDE JOINT

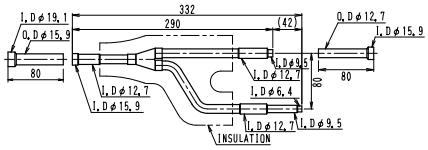

D3K05708

KHRP25A73T

GAS SIDE JOINT

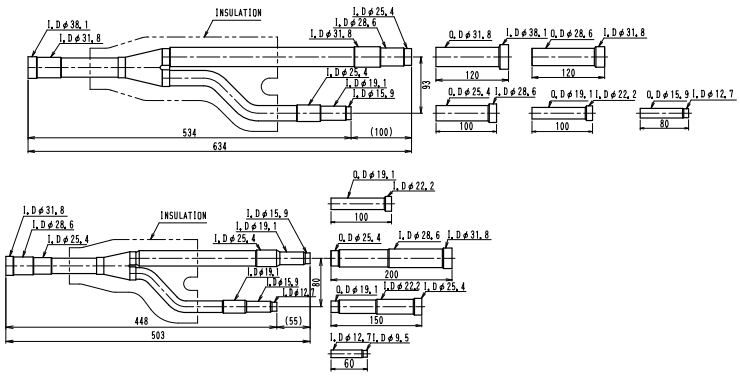

LIQUID SIDE JOINT

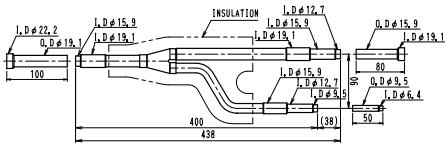

D3K05709

Installation Manual

THIS KIT INCLUDES THE FOLLOWING PARTS.

KIT NAME	SHAPE			
	SUCTION GAS SIDE JOINT	HP/LP GAS SIDE JOINT	LIQUID SIDE JOINT	INSULATION
KHRP25A 22T	※ REDUCER φ19.1	※ φ9.5	※	3 pcs.
KHRP25A 33T	REDUCER φ22.2 φ25.4 φ19.1			3 pcs.
KHRP25A 72T	REDUCER φ22.2 φ28.6 ×2pcs.	φ25.4/22.2 φ19.1	φ15.9 φ19.1	3 pcs.
KHRP25A 73T	REDUCER φ12.7 φ22.2 φ28.6 φ31.8 φ38.1	φ31.8/28.6 φ25.4/22.2 φ22.2 φ9.5	φ6.4 φ19.1 φ22.2	3 pcs.

※…Make sure suction gas side joint, HP/LP gas side and liquid side joint are for R410A. (Label for R410A is attached on each part.)

INTRODUCTION

This kit is designed as a refrigerant branching kit for HEAT RECOVERY unit for installation in buildings.

- Between outdoor unit and BS unit (upstream of BS unit), use 3 pipings. Use this kit for such branching application.
- Between BS unit and indoor unit (downstream of BS unit) and between REFNET JOINT and cooling-only indoor unit, use 2 pipings.

3 pipings	2 pipings	
Upstream of BS unit	Downstream of BS unit	To cooling-only indoor unit
Suction gas side piping HP/LP gas side piping Liquid side piping	Gas side piping Liquid side piping	Suction gas side piping Liquid side piping

SELECTION PROCEDURE

According to the INSTALLATION MANUAL of outdoor unit.

INSTALLATION PROCEDURE

1. The pipe size of each parts are shown below.

KIT NAME	SUCTION GAS SIDE JOINT	HP/LP GAS SIDE JOINT	LIQUID SIDE JOINT
KHRP25A 22T	I.D φ12.7 I.D φ15.9 I.D φ19.1 I.D φ12.7 I.D φ15.9 Inlet Outlet I.D φ15.9 I.D φ12.7	I.D φ12.7 I.D φ15.9 I.D φ9.5 I.D φ12.7 I.D φ15.9 Inlet Outlet I.D φ12.7 I.D φ9.5	I.D φ9.5 I.D φ6.4 I.D φ9.5 Inlet Outlet I.D φ9.5 I.D φ6.4
KHRP25A 33T	I.D φ22.2 I.D φ19.1 I.D φ15.9 I.D φ19.1 Inlet Outlet I.D φ15.9 I.D φ12.7	I.D φ15.9 I.D φ19.1 I.D φ12.7 I.D φ15.9 I.D φ19.1 Inlet Outlet I.D φ15.9 I.D φ12.7 I.D φ9.5	I.D φ12.7 I.D φ9.5 I.D φ6.4 I.D φ9.5 Inlet Outlet I.D φ9.5 I.D φ6.4
KHRP25A 72T	I.D φ31.8 I.D φ28.6 I.D φ25.4 I.D φ15.9 I.D φ19.1 I.D φ25.4 Inlet Outlet I.D φ19.1 I.D φ15.9 I.D φ12.7	I.D φ25.4 I.D φ22.2 I.D φ19.1 I.D φ12.7 I.D φ15.9 I.D φ19.1 Inlet Outlet I.D φ15.9 I.D φ12.7 I.D φ9.5	I.D φ15.9 I.D φ12.7 I.D φ9.5 I.D φ12.7 Inlet Outlet I.D φ12.7 I.D φ9.5 I.D φ6.4
KHRP25A 73T	I.D φ38.1 I.D φ31.8 I.D φ25.4 I.D φ28.6 I.D φ31.8 Inlet Outlet I.D φ25.4 I.D φ19.1 I.D φ15.9	I.D φ31.8 I.D φ28.6 I.D φ25.4 I.D φ15.9 I.D φ19.1 I.D φ25.4 Inlet Outlet I.D φ19.1 I.D φ15.9 I.D φ12.7	I.D φ15.9 I.D φ19.1 I.D φ12.7 I.D φ15.9 I.D φ19.1 Inlet Outlet I.D φ15.9 I.D φ12.7 I.D φ9.5

3P203737

❷ According to SELECTION PROCEDURE cut the pipe with a pipe cutter for use.

- (Ex)FOR KHRP25A33T

①SUCTION GAS SIDE JOINT

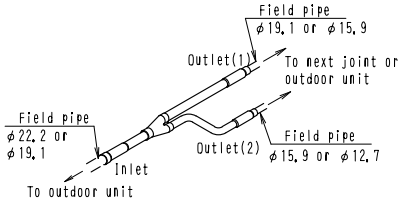

NOTE)For the size of inlet is φ19.1 or the size of outlet(1) is φ19.1, the size of outlet(2) is φ15.9

- Cut the pipe with a pipe cutter.

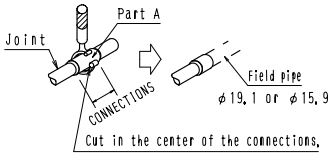

② HP/LP GAS SIDE JOINT

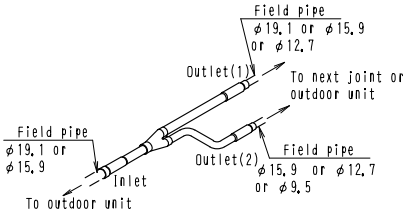

NOTE)For the size of inlet is φ19.1 or the size of outlet(1) is φ19.1 or φ15.9, the size of outlet(2) is φ15.9 or φ12.7

- Cut the pipe with a pipe cutter.

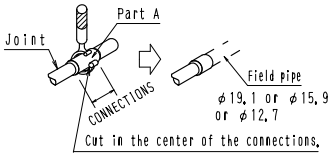

③LIQUID SIDE JOINT

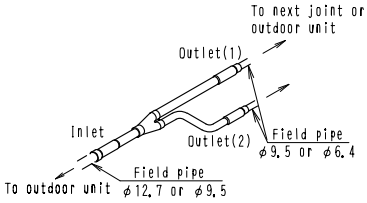

NOTE)For the size of inlet is φ9.5 or the size of outlet(1) or (2) is φ9.5

- Cut the pipe with a pipe cutter.

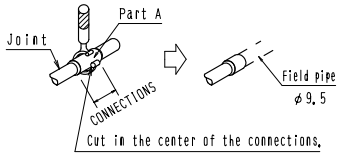

Cut in the center of the part A and connect a field pipe.

④ When the suction gas side pipe size of outlet(1) is φ22.2.

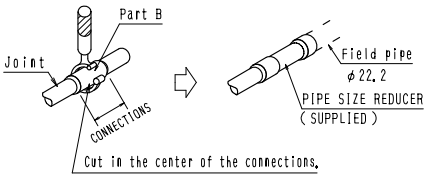

Cut the center of the part B and use PIPE SIZE REDUCER.

- Make sure to flow nitrogen gas through the pipe when brazing.

❸ Insulation of JOINT

- Be sure to insulate the suction/discharge gas and liquid side JOINT.
  Note) The insulation of the refrigerant piping must be reinforced based on the environment of installation. Otherwise, dew may condensate on the surface of the insulation. For details, see Engineering Data.
- Seal the insulation and field piping insulation joint with the field supplied tape.

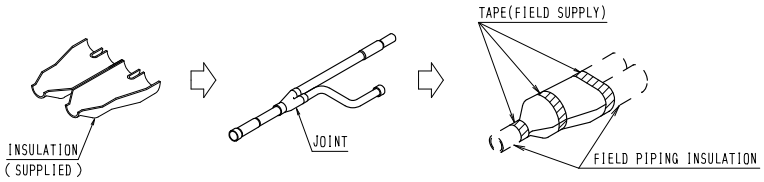

INSTALLATION PRECAUTIONS

- Install the JOINT so that it is branched vertically or horizontally.

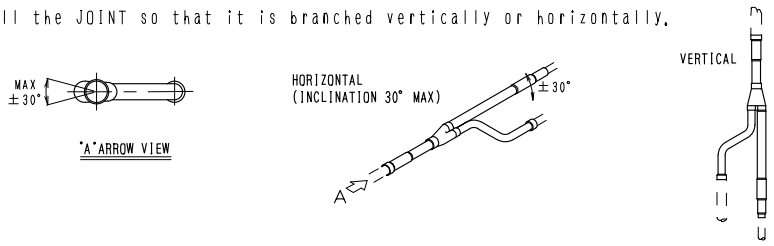

- Do not apply extra force on the piping part. The brazed part may be damaged and it may result in gas leakage.

3P203737

5. Outdoor Unit Multi Connection Piping Kit

5.1 BHF22M90 / 135

Installation Manual

■THIS KIT INCLUDES THE FOLLOWING PARTS. Table 1

KIT NAME	SHAPE				
	GAS SIDE JOINT	LIQUID SIDE JOINT	REDUCER(FOR GAS PIPE)	REDUCER (FOR LIQUID PIPE)	JOINT FOR OIL PIPE
BHF22M 90	I.D ø31.8 / I.D ø31.8 / I.D ø31.8 — 1 pcs.	I.D ø12.7 / I.D ø15.9 / I.D ø19.0 / I.D ø15.9 / I.D ø12.7 — 1 pcs.	(1) I.D ø41.3 / O.D ø31.8 — 1 pcs.; (2) I.D ø34.9 / O.D ø31.8 — 3 pcs.; (3) I.D ø28.6 / O.D ø31.8 — 2 pcs.	I.D ø22.2 / O.D ø19.1 — 1 pcs.	
BHF22M 135	(1) I.D ø31.8 / I.D ø41.3 / I.D ø31.8 — 1 pcs.; (2) I.D ø31.8 / I.D ø31.8 / I.D ø31.8 — 1 pcs.	(1) I.D ø12.7 / I.D ø15.9 / I.D ø22.2 / I.D ø19.1 — 1 pcs.; (2) I.D ø12.7 / I.D ø15.9 / I.D ø19.0 / I.D ø15.9 / I.D ø12.7 — 1 pcs.	(1) I.D ø54.1 / O.D ø41.3 — 1 pcs.; (2) I.D ø41.3 / O.D ø31.8 — 2 pcs.; (3) I.D ø34.9 / O.D ø31.8 — 4 pcs.; (4) I.D ø28.6 / O.D ø31.8 — 2 pcs.	I.D ø22.2 / O.D ø19.1 — 2 pcs.	1 pcs.

NOTE) • Installation of outdoor units refer to INSTALLATION MANUAL of outdoor unit.
• Installation of refrigerant pipes between outdoor and indoor units need to arrange for REFNET JOINT and REFNET HEADER.
• Combination of outdoor units follow Engineering Data.

■FIELD SUPPLY PARTS Table 2

PARTS	QUANTITY	SELECTION PROCEDURE
INSULATION FOR PIPE	1 SET	FOR BHF22M90 :Refer to Table4, 5 FOR BHF22M135 :Refer to Table7, & 9
REFRIGERANT PIPES		
JOINT (FOR GAS PIPE ANGLE OF 90 DEGREES)	1 pcs.	Joint size must be the same as gas side pipe size of the upper side outdoor unit. FOR BHF22M90 :Refer to Table5 FOR BHF22M135 :Refer to Table9
TAPE	1 SET	(FOR INSULATION)

■SELECTION PROCEDURE Table 3

NO. of outdoor units	KIT NAME
2units	BHF22M90
3units	BHF22M135

FOR BHF22M90 ⚠CAUTION Outdoor units multi connection piping connect right according to the INSTALLATION MANUAL of outdoor unit.

Pipe size selection and cutting position of JOINT
According to the following table cut the joint or reduser with a pipe cutter for use.

Between the outdoor unit and the refrigerant branch kit
• Select the proper pipe size based on the total capacity index of outdoor units. Table 4

Total capacity index of outdoor units	Pipe size (Unit : mm) GAS	LIQUID
450 ≦ X ≦ 550	ø34.9	ø19.1
605	ø41.3	
650 ≦ X ≦ 800		ø22.2

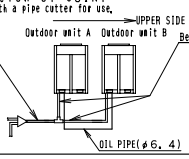

Between the outdoor unit and the connection piping kit Table 5

Capacity index of outdoor units	Pipe size (Unit : mm) GAS	LIQUID
200・250	ø28.6	ø12.7
300・350 ・400	ø34.9	ø15.9

• Cut the pipe with a pipe catter.

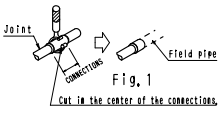

Fig. 1

❶ ILLUSTRATION IN CASE OF FRONT PIPING

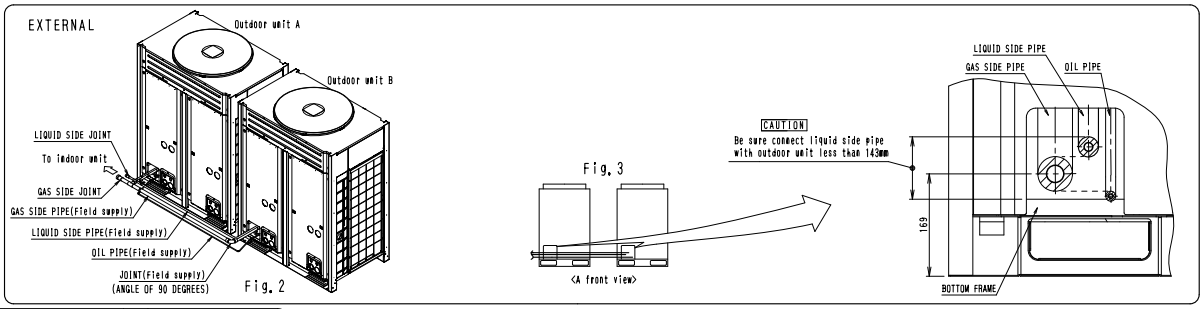

❷ INSTALLATION OF GAS SIDE PIPES

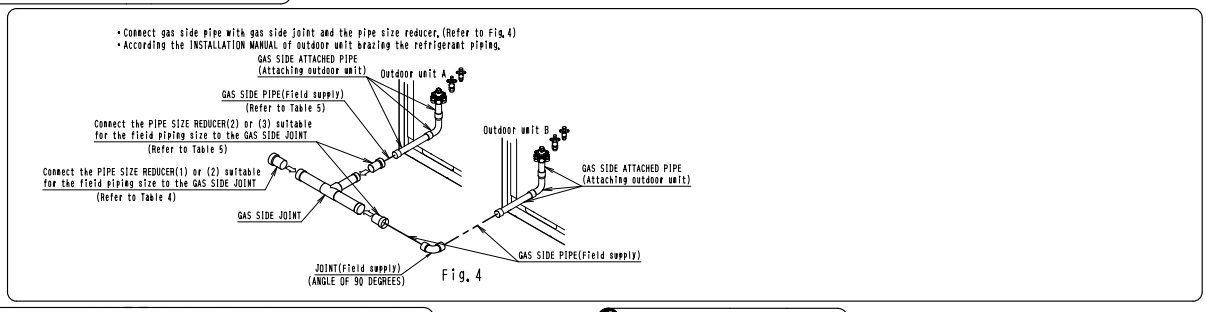

❸ INSTALLATION OF LIQUID SIDE PIPES AND OIL PIPE

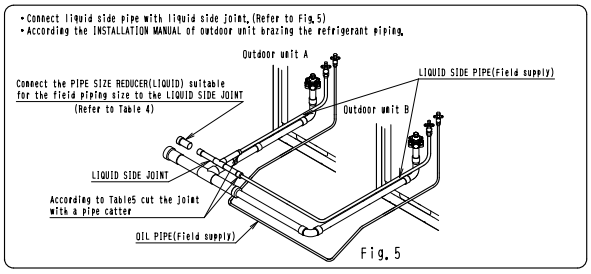

❹ AFTER CONNECTION PIPING

4-1 CONNECTION PIPING BETWEEN THE OUTDOOR UNIT AND INDOOR UNIT
• According to the INSTALLATION MANUAL of outdoor unit.

4-2 INSULATION OF JOINT
• Seal the insulation and field piping insulation joint with the tape.

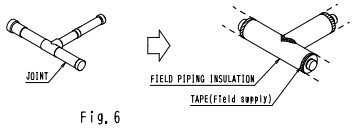

Fig. 6

1P115031

❶ ILLUSTRATION IN CASE OF UNDERSIDE PIPING

⚠CAUTION Be sure to secure space for brazing and piping work under the outdoor unit.

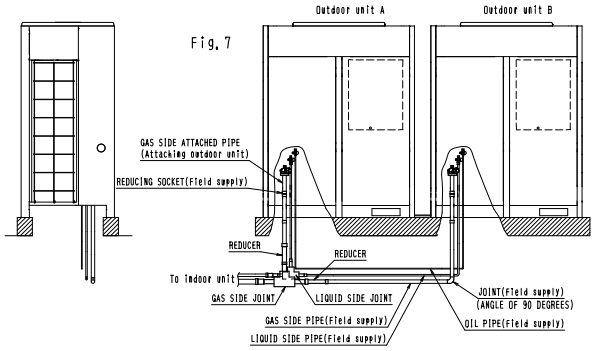

• According to IN CASE OF FRONT PIPING connect the pipes with the JOINT and the PIPE SIZE REDUCER.

FOR BHF22M135 ⚠CAUTION Outdoor units multi connection piping connect right according to the INSTALLATION MANUAL of outdoor unit.

Pipe size selection and cutting position of JOINT

According to the following table cut the joint or reduser with a pipe cutter for use.

Between the outdoor unit and the refrigerant branch kit

• Select the proper pipe size based on the total capacity index of outdoor units.

Table 7

Total capacity index of outdoor units	Pipe size (Unit : mm) GAS	LIQUID
855	ϕ41. 3	ϕ22. 2
900 ≦ X	ϕ54. 1	

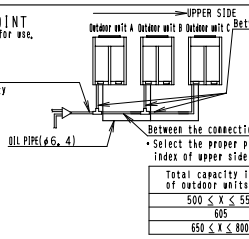

Between the outdoor unit and the connection piping kit

Table 9

Capacity index of outdoor units	Pipe size (Unit : mm) GAS	LIQUID
200・250	ϕ28. 6	ϕ12. 7
300・350・400	ϕ34. 9	ϕ15. 9

Between the connection piping kit and the connection piping kit

• Select the proper pipe size based on the total capacity index of upper side outdoor units.

Table 8

Total capacity index of outdoor units	Pipe size (Unit : mm) GAS	LIQUID
500 ≦ X ≦ 550	ϕ34. 9	ϕ19. 1
605	ϕ41. 3	
650 ≦ X ≦ 800		ϕ22. 2

• Cut the pipe with a pipe catter.

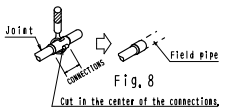

❶ ILLUSTRATION IN CASE OF FRONT PIPING

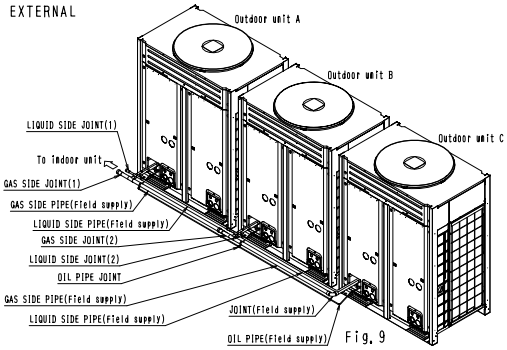

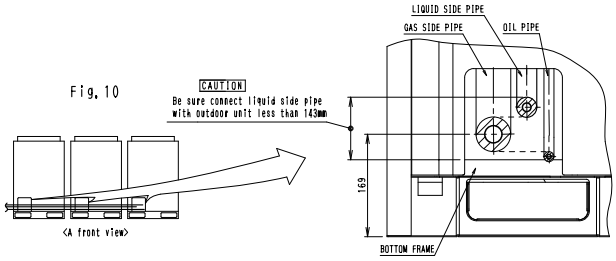

❷ INSTALLATION OF PIPES

2-1 CONNECTION GAS SIDE PIPING

• Connect gas side pipe with gas side joint and the pipe size reducer. (Refer to Fig. 11)
• According the INSTALLATION MANUAL of outdoor unit brazing the refrigerant piping.

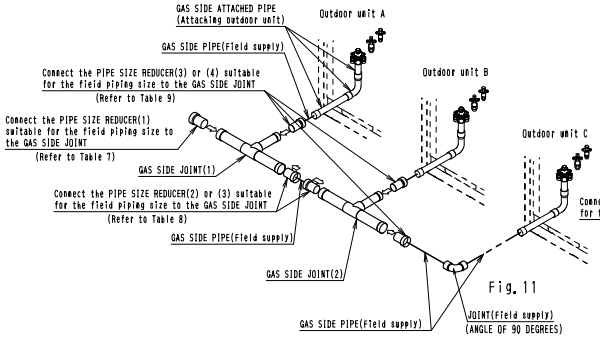

2-2 CONNECTION LIQUID SIDE AND OIL PIPING

• Connect liquid side pipe with liquid side joint. (Refer to Fig. 12)
• According the INSTALLATION MANUAL of outdoor unit brazing the refrigerant piping.

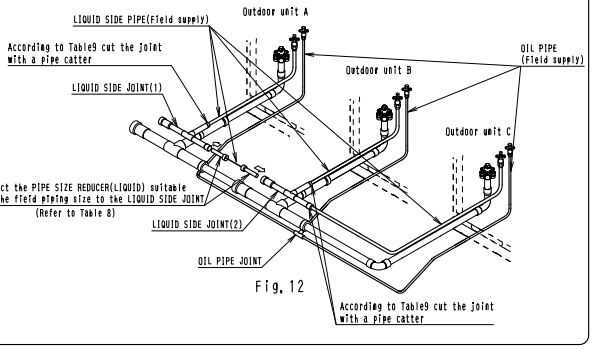

❸ AFTER CONNECTION PIPNG

IN CASE OF UNDERSIDE PIPING	• Be sure to secure space for brazing and piping work under the outdoor unit. • According to Fig.7 install the kit.

1P115031

BHF22M90 - Liquid Pipe

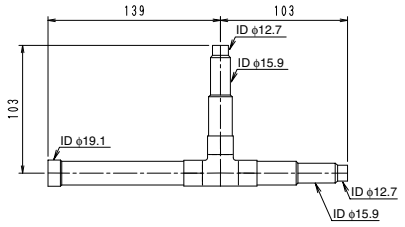

4P114979

Reducer

Unit (mm)

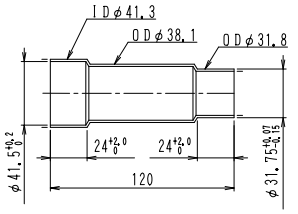

3P113128 - 2

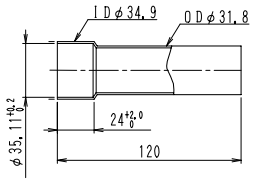

3PCS.

3P113128 - 3

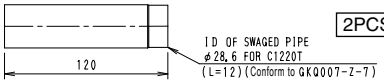

2PCS.

4P114858 - 3

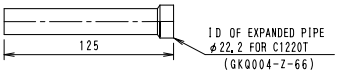

4P114858 - 5

BHF22M90 - Gas Pipe

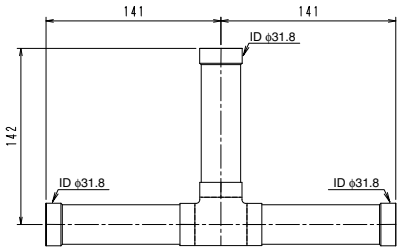

4P114977

BHF22M135 - Liquid Pipe

Reducer

Unit (mm)

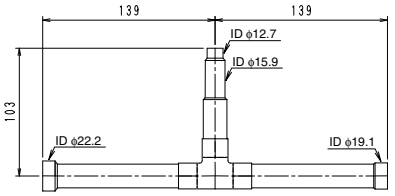

4P114980

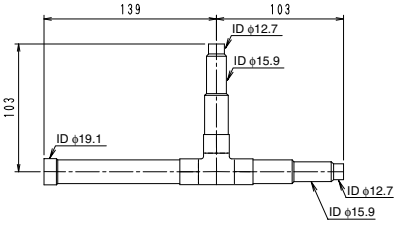

4P114979

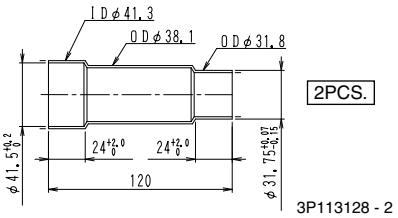

2PCS.

3P113128 - 2

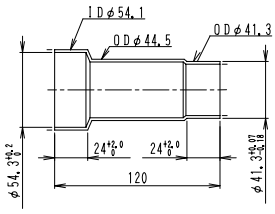

3P113128 - 5

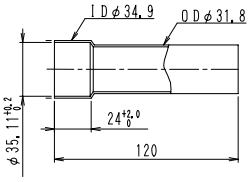

4PCS.

3P113128 - 3

Joint for Oil Pipe:

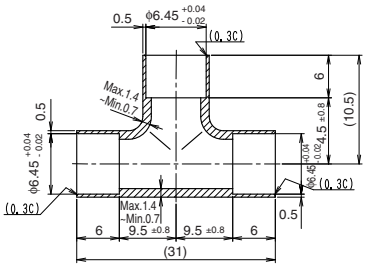

NI32052E-2

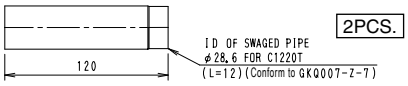

2PCS.

4P114858 - 3

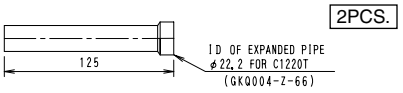

2PCS.

4P114858 - 5

BHF22M135 - Gas Pipe

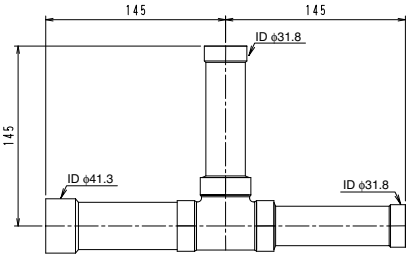

4P114978

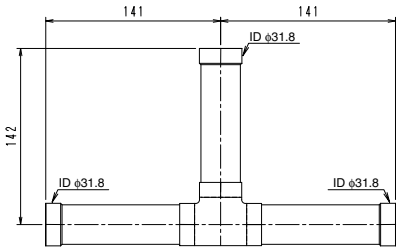

4P114977

5.2 BHFP22P100 / 151

BHFP22P100

Gas side

Unit (mm)

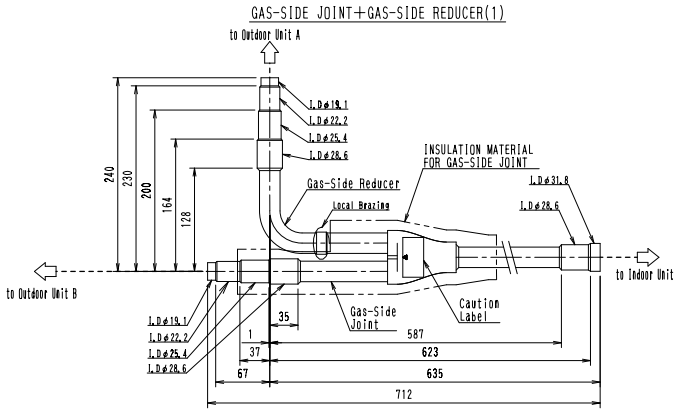

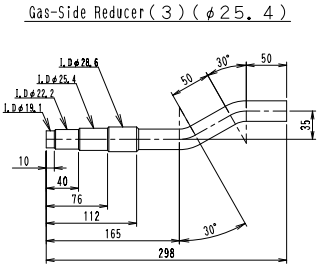

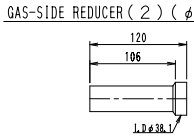

Accessory

GAS-SIDE JOINT : 1
LIQUID-SIDE JOINT : 1
GAS-SIDE REDUCER(1) : 1
GAS-SIDE REDUCER(2) : 1
GAS-SIDE REDUCER(3) : 1
GAS-SIDE REDUCER(7) : 1
GAS-SIDE REDUCER(9) : 1
LIQUID-SIDE REDUCER(1) : 1
LIQUID-SIDE REDUCER(3) : 1
LIQUID-SIDE REDUCER(5) : 1
INSULATION MATERIAL FOR GAS-SIDE JOINT : 1
INSULATION MATERIAL FOR LIQUID-SIDE JOINT : 1
INSULATION MATERIAL FOR GAS-SIDE PIPE : 1
INSULATION MATERIAL FOR LIQUID-SIDE PIPE : 1
INSTALLATION MANUAL

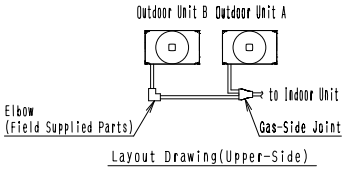

NOTE)1. "-----" in the figure show field supply piping.
2. About size of connection pipe refer the "engineering data of VRV Ⅲ".
3. In case of install this kit observe follow conditiones.
- Do not tilt the joint more than ±15°.
Install the joint horizontally so that the caution label attached to joint comes to the top.
- Do not install the joint vertically why it may cause the malfunction of outdoor unit.
- Make sure the piping up to the joint is straight for more than 500mm. Do not bend the field piping within this range. If a straight field piping more than 120mm is connected, more than 500mm of straight section can be ensured.

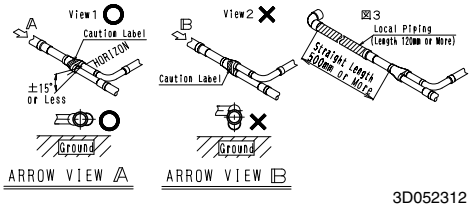

3D052312

Liquid side

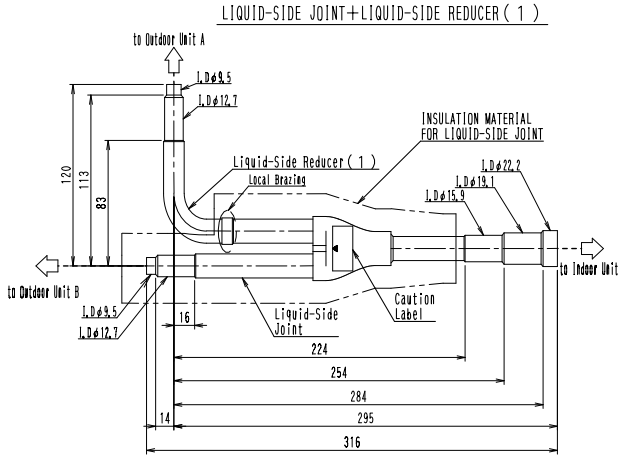

NOTE)1. "-----" in the figure show field supply piping.
2. About size of connection pipe refer the "engineering data of VRV Ⅲ".
3. In case of install this kit observe follow conditiones.
- Do not tilt the joint more than ±15°.
Install the joint horizontally so that the caution label attached to joint comes to the top.
- Do not install the joint vertically why it may cause the malfunction of outdoor unit.
- Make sure the piping up to the joint is straight for more than 500mm. Do not bend the field piping within this range. If a straight field piping more than 120mm is connected, more than 500mm of straight section can be ensured.

Accessory

GAS-SIDE JOINT : 1
LIQUID-SIDE JOINT : 1
GAS-SIDE REDUCER(1) : 1
GAS-SIDE REDUCER(2) : 1
GAS-SIDE REDUCER(3) : 1
GAS-SIDE REDUCER(7) : 1
GAS-SIDE REDUCER(9) : 1
LIQUID-SIDE REDUCER(1) : 1
LIQUID-SIDE REDUCER(3) : 1
LIQUID-SIDE REDUCER(5) : 1
INSULATION MATERIAL FOR GAS-SIDE JOINT : 1
INSULATION MATERIAL FOR LIQUID-SIDE JOINT : 1
INSULATION MATERIAL FOR GAS-SIDE PIPE : 1
INSULATION MATERIAL FOR LIQUID-SIDE PIPE : 1
INSTALLATION MANUAL

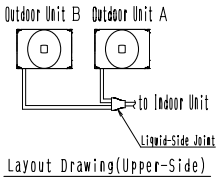

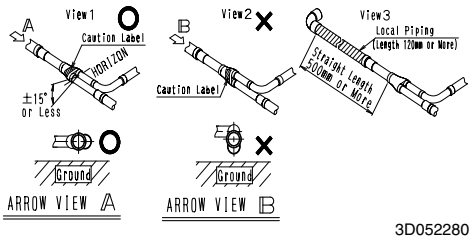

3D052280

BHFP22P151

Gas side

Unit (mm)

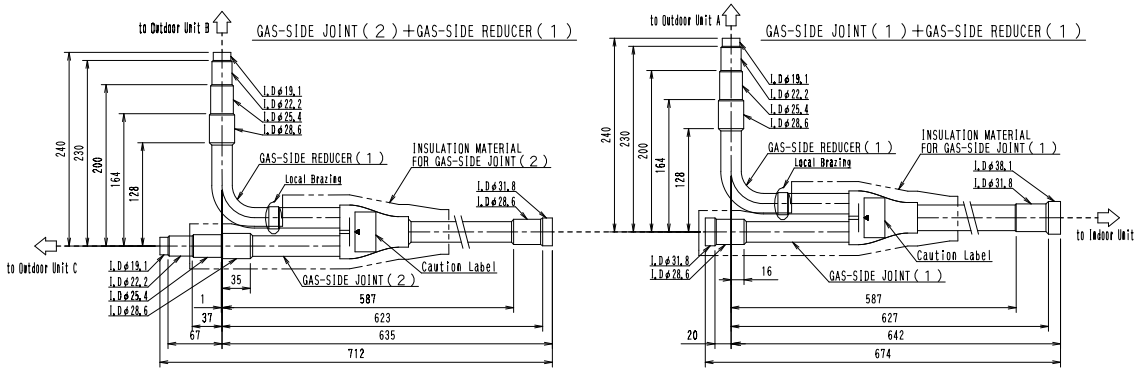

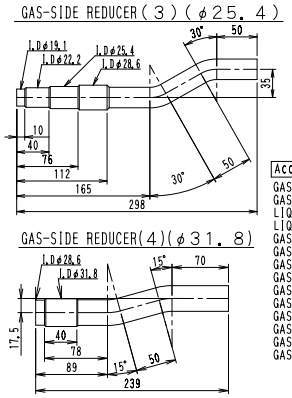

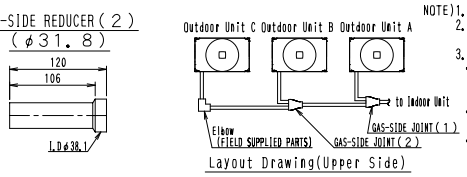

NOTE) 1. "-----" in the figure show field supply piping.
2. About size of connection pipe refer the "engineering data of VRV Ⅲ".
3. In case of install this kit observe follow conditiones.
- Do not tilt the joint more than ±15°. Install the joint horizontally so that the caution label attached to joint comes to the top.
- Do not install the joint vertically why it may cause the malfunction of outdoor unit.
- Make sure the piping up to the joint is straight for more than 500mm. Do not bend the field piping within this range. If a straight field piping more than 120mm is connected, more than 500mm of straight section can be ensured.

Accessory

GAS-SIDE JOINT (1) : 1	LIQUID-SIDE REDUCER (1) : 2
GAS-SIDE JOINT (2) : 1	LIQUID-SIDE REDUCER (2) : 1
LIQUID-SIDE JOINT (1) : 1	LIQUID-SIDE REDUCER (3) : 2
LIQUID-SIDE JOINT (2) : 1	LIQUID-SIDE REDUCER (4) : 1
GAS-SIDE REDUCER (1) : 2	LIQUID-SIDE REDUCER (5) : 1
GAS-SIDE REDUCER (2) : 1	INSULATION MATERIAL
GAS-SIDE REDUCER (3) : 1	FOR GAS-SIDE JOINT (1) : 1
GAS-SIDE REDUCER (4) : 1	INSULATION MATERIAL
GAS-SIDE REDUCER (5) : 1	FOR GAS-SIDE JOINT (2) : 1
GAS-SIDE REDUCER (6) : 1	INSULATION MATERIAL
GAS-SIDE REDUCER (7) : 2	FOR LIQUID-SIDE JOINT (1) : 1
GAS-SIDE REDUCER (8) : 1	INSULATION MATERIAL
GAS-SIDE REDUCER (9) : 2	FOR LIQUID-SIDE JOINT (2) : 1
GAS-SIDE REDUCER (10) : 1	INSULATION MATERIAL FOR GAS-SIDE PIPE : 2
	INSULATION MATERIAL FOR LIQUID-SIDE PIPE : 2
	INSTALLATION MANUAL

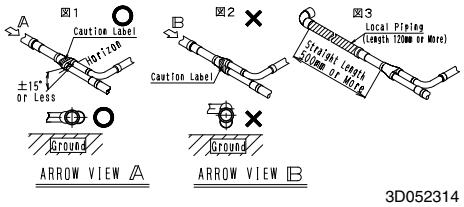

3D052314

Liquid side

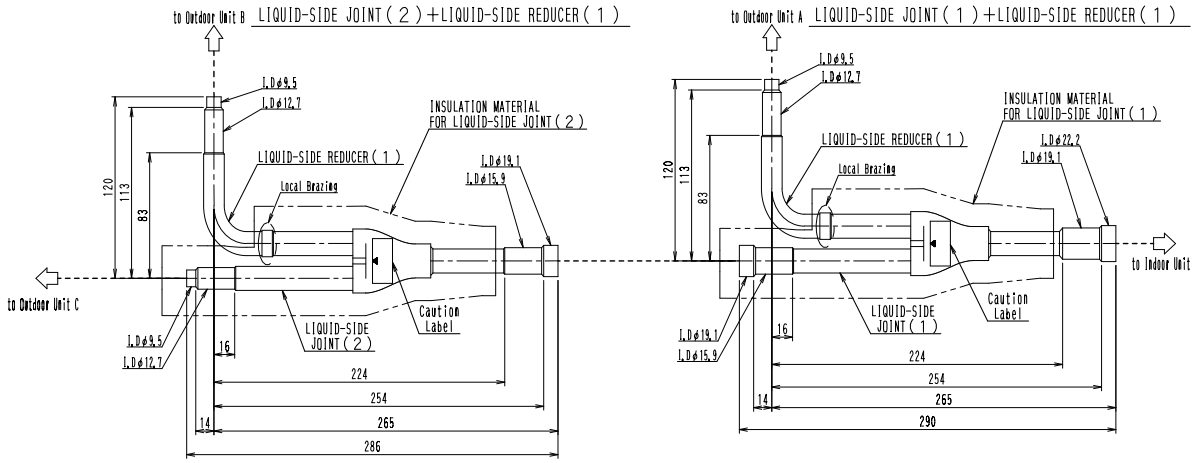

NOTE) 1. "-----" in the figure show field supply piping.
2. About size of connection pipe refer the "engineering data of VRV Ⅲ".
3. In case of install this kit observe follow conditiones.
- Do not tilt the joint more than ±15°. Install the joint horizontally so that the caution label attached to joint comes to the top.
- Do not install the joint vertically why it may cause the malfunction of outdoor unit.
- Make sure the piping up to the joint is straight for more than 500mm. Do not bend the field piping within this range. If a straight field piping more than 120mm is connected, more than 500mm of straight section can be ensured.

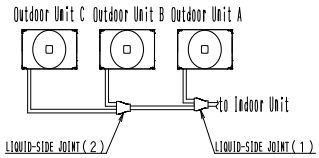

Accessory

GAS-SIDE JOINT (1) : 1	LIQUID-SIDE REDUCER (1) : 2
GAS-SIDE JOINT (2) : 1	LIQUID-SIDE REDUCER (2) : 1
LIQUID-SIDE JOINT (1) : 1	LIQUID-SIDE REDUCER (3) : 2
LIQUID-SIDE JOINT (2) : 1	LIQUID-SIDE REDUCER (4) : 1
GAS-SIDE REDUCER (1) : 2	LIQUID-SIDE REDUCER (5) : 1
GAS-SIDE REDUCER (2) : 1	INSULATION MATERIAL
GAS-SIDE REDUCER (3) : 1	FOR GAS-SIDE JOINT (1) : 1
GAS-SIDE REDUCER (4) : 1	INSULATION MATERIAL
GAS-SIDE REDUCER (5) : 1	FOR GAS-SIDE JOINT (2) : 1
GAS-SIDE REDUCER (6) : 1	INSULATION MATERIAL
GAS-SIDE REDUCER (7) : 2	FOR LIQUID-SIDE JOINT (1) : 1
GAS-SIDE REDUCER (8) : 1	INSULATION MATERIAL
GAS-SIDE REDUCER (9) : 2	FOR LIQUID-SIDE JOINT (2) : 1
GAS-SIDE REDUCER (10) : 1	INSULATION MATERIAL FOR GAS-SIDE PIPE : 2
	INSULATION MATERIAL FOR LIQUID-SIDE PIPE : 2
	INSTALLATION MANUAL

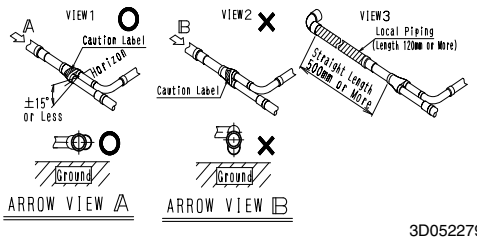

3D052279

Installation Manual

VRV III Series Please be sure to read before installation and follow the instructions carefully when performing installation work. 1P173261-1A

Outdoor unit Multi Connection Piping Kit Installation Manual BHFP22P100 • BHFP22P151

Component parts

■This kit contains the follwing parts. **<Do not throw away any of the accessories until installation is complete.>**

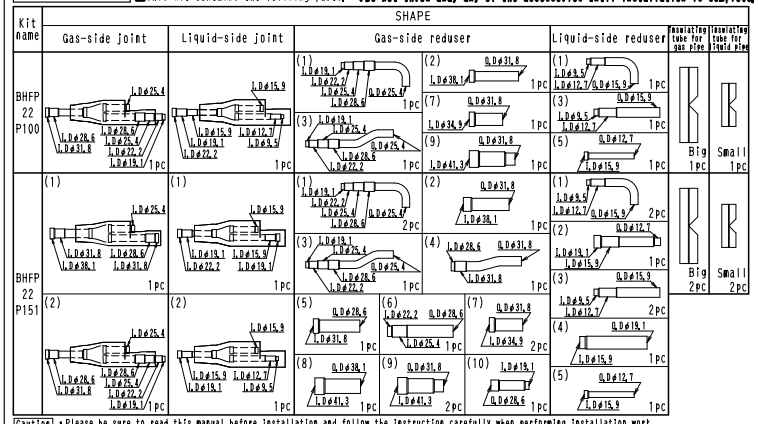

Caution
- Please be sure to read this manual before installation and follow the instruction carefully when performing installation work.
- See the outdoor unit's installation manual for outdoor unit installation.
- Installation of interconnecting piping between the outdoor and indoor units, REFNET joint or REFNET header will be needed separately.

Selection Procedure

Number of outdoor units connected	2 units	3 units
Outdoor unit Multi Connection Piping Kit	BHFP22P100	BHFP22P151

- 2 or 3 outdoor units can be connected.
- There are restrictions on the combination and the installation order of outdoor units, so please refer to "the Engineering Data of VRV III" and "the installation manual" (attached sheet of outdoor unit) for details.

Field supply parts

■The following parts are needed to connect this kit and are not included.

Field supply parts		
Name	Q'ty	Selection Procedure
Insulation for piping Connection piping	1set	See the "Connecting Pipe Sizes and location of cutting the joint" for details on the necessary size.
Elbow	1pc	Prepare a gas pipe diameter for the upper outdoor unit as listed in "Connecting Pipe Sizes and location of cutting the joint."
Tape	1set	For insulation materials

Caution
- Quantity and selection procedure of elbow only applies to a front or bottom connection.
- For a lower front connection, the quantity and selection procedure are different, so please refer to the instructions for a lower front connection.
- A joint for the same diameter pipes is needed only for a bottom connection. See the instructions for the bottom connection for details on quantity and specifications.
- The min. thickness of the pipes in this manual shows the requirements of Japanese High Pressure Gas Control law. (As of Jan.2003) And the temper grade (O, 1/2H) shows the material type of JIS H 3300. The thickness and material shall be selected in accordance with local code for the design pressure 4.0MPa(40bar).

(Unit : mm)

Temper grade	O Type				1/2H Type						
Copper tube O.D.	φ6.4	φ9.5	φ12.7	φ15.9	φ19.1	φ22.2	φ25.4	φ28.6	φ31.8	φ34.9	φ38.1	φ41.3
Copper tube W.T (Minimum requirement)	0.80	0.80	0.80	0.99	0.80	0.80	0.88	0.99	1.10	1.21	1.32	1.43

To the pipeing installer When installing this kit, please apply the following restrictions.

Restrictions on Installing Multi Connection Piping Kit

- Install the joint horizontally so that the caution label attached to joint comes to the top. Do not tilt the joint more than ±15°. (See Fig. 1). In addition, do not install the joint vertically. (See Fig. 2)
- Make sure the piping up to the joint is straight for more than 500mm. Do not bend the field piping within this range. If a straight field piping more than 120mm is connected, more than 500mm of straight section can be ensured. (See Fig. 3)
- Improper installation may lead to malfunction of the outdoor unit.

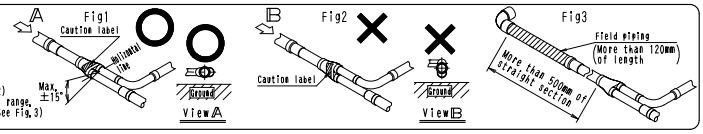

Installation examples

- The figure at the lower shows a typical front connection. Make sure to follow the installation restrictions and carry out installation taking the field requirements into consideration.
- This manual explains the front connection <Ex. of construction 1>.
- For 3-unit Installation on Ex. of construction 5 and 6, in some cases the reducers (5), (6) or (10) for gas piping and the reducers (2) and (3) for liquid piping may be used on the 1st joint (section shown with ◄). See the figure at the right for details of connection.
- When the size of the Gas-side pipe between the Gas-side joint (1) and Gas-side joint (2) on the 3-units system or the size of the main pipe is φ41.3 or φ34.9, Gas-side reducer (7), (8) and (9) will be used. See the figure at the right for details of connection.
- When the size of the Liquid-side pipe between the Liquid-side joint (1) and Liquid-side joint (2) on the 3-units system is φ12.7, Liquid-side reducer (3) will be used. And when the side of main pipe is φ15.9, Liquid-side reducer (4) will be used. See the figure at the right for details of connection.

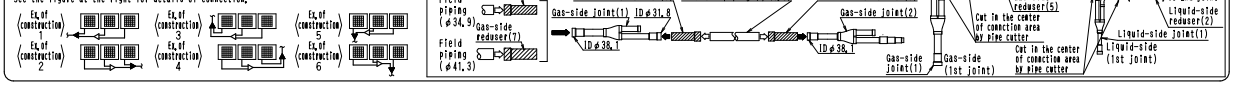

BHFP22P100 Installation Instructions

Caution There are some restrictions on the interconnecting piping between the outdoor units. See the installation manual attached to the outdoor units and make sure to carry out proper piping. If the piping restrictions are not observed, it may result in malfunction of the unit.

Connecting pipe sizes and location of cutting the joint

Select cutting point of a joint or a reducer which is suitable for the size of the interconnecting pipes determined according to the table below and cut it with a pipe cutter.

Main pipe
- Select the pipe size according to the total capacity of outdoor unit. (units : mm)

Outdoor unit total capacity type	Pipe size (O.D. x min. thickness [temper grade])	
	Gas pipe	Liquid pipe
16HP	φ28.6X0.99[1/2H]	φ12.7X0.80[O]
18~22HP		φ15.9X0.99[O]
24HP	φ34.9X1.21[1/2H]	
26~34HP		φ19.1X0.80[1/2H]
36HP	φ41.3X1.43[1/2H]	

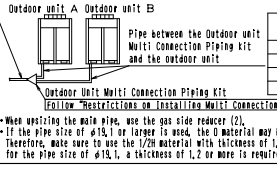

- When upsizing the main pipe, use the gas side reducer (2).
- If the pipe size of φ19.1 or larger is used, the O material may be insufficient to withstand the specified pressure. Therefore, make sure to use the 1/2H material with thickness of 1.0mm or more. When using the O material for the pipe size of φ19.1, a thickness of 1.2 or more is required. In this case, the connection must be brazed.

(units:mm)

Outdoor unit capacity type	Pipe size (O.D. x min. thickness [temper grade])	
	Gas pipe	Liquid pipe
8HP	φ19.1X0.80[1/2H]	φ 9.5X0.80[O]
10HP	φ22.2X0.80[1/2H]	
12~16HP	φ28.6X0.99[1/2H]	φ12.7X0.80[O]
18HP		φ15.9X0.99[O]

Cutting procedure
- Use pipe cutter for cutting.

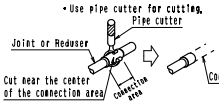

❶ Installation examples — Procedure for Front Connection

1-1 Exterior view

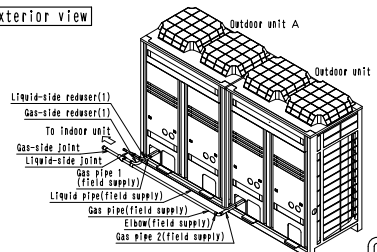

1-2 Finished dimensions

- For installations where the A dimensions exceed 290mm, extend the field supply interconnecting pipe between the joint and the outdoor unit.

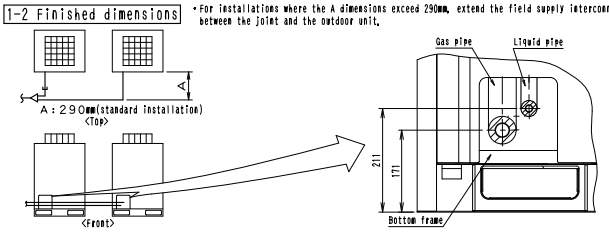

❷ Connection of gas and liquid pipes

2-1 Cutting the field supply gas pipes

- Cut the pipes according to Table 1.

Caution
- This table shows the case when the A dimensions shown in 1-2 Finished dimensions is 290mm. If the A dimensions exceed 290mm, see Table 1 and adjust the dimensions of the gas pipe 1 and 2.
- The L dimensions of the gas pipe 2 in Table 1 show those when the field supply elbows have B dimension in Table 2. If the B dimension is not same with Table 2, see Table 1 and 2, and adjust them accordingly.

■ Table 1

Model type	Gas pipe 1 (field supply) L (mm)	Gas pipe 2 (field supply) L (mm)
8HP	75	287
10HP	81	257
12~18HP	125	223

■ Table 2

Model type	Elbow(field supply) B (mm)
8HP	17
10HP	23
12~18HP	29

2-2 Connection of pipes

- Connect the gas and liquid pipes as shown in the figure at the right. (When connecting the pipes, first connect the gas-side joint and the gas-side reducer(1), the liquid-side joint and the liquid side reducer(1).)
- See 1-2 Finished dimensions for the location(height) of the joint.
- See the caution section in the installation manual attached to the outdoor unit for brazing pipes and connecting pipes with flare nuts.
- Install the joint in such a way that the attached face of the caution label becomes horizontal (See the View A).

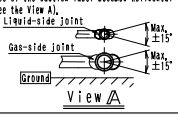

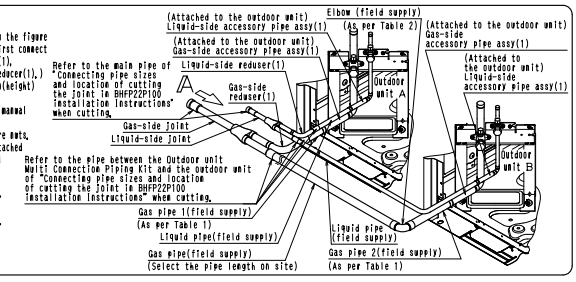

1P173261A

❸ The work after the kit is connected

Connection of piping between the outdoor unit and the indoor unit } Follow the instructions in the installation manual included with the outdoor unit, when performing installation work.

Air tight test

Insulation of joints

(1) Fit the insulation to the reducer and temporarily keep it in place with tape.
(2) Fit the insulation to the joint and temporarily keep it in place with tape without leaving a gap between the insulation mating faces. (See the figure at the right.)
(3) Seal the seam between the insulation and the field supply piping insulation with the field supply tape.
(4) Wrap the tape around the insulation attached to the joint without leaving a gap. (▨ section shown in the figure at the right.)

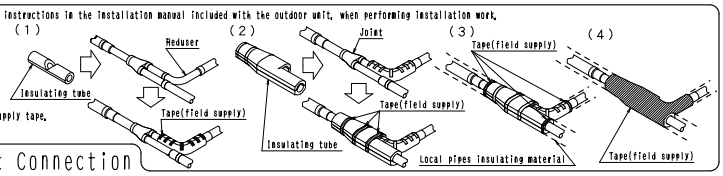

❶ Installation examples — Procedure for Lower Front Connection

1-1 Exterior view

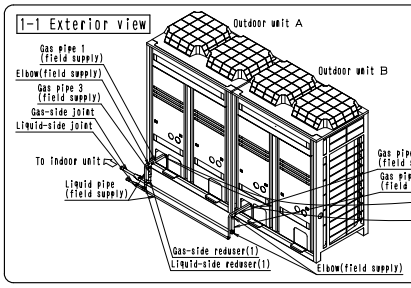

1-2 Finished dimensions

- A standard installation has the following dimensions.
- When the dimensions exceed the standard installation, extend the pipes between the outdoor unit and the joint(field supply).

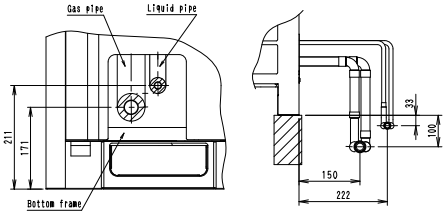

❷ Connection of gas and liquid pipes

2-1 Cutting the field supply gas pipe 1 to 4

- Cut the pipes according to Table 3

Caution
- The L dimensions of the gas pipe 1 to 4 in Table 3 show those when the field supply elbows have B dimension in Table 2 shown in Procedure for Front Connection, 2 Connection of gas and liquid pipes. If the B dimensions are not same with Table 2, see Table 2 and 3, and adjust them accordingly.

■ Table 3

Model type	Gas pipe 1(field supply) L(mm)	Gas pipe 2(field supply) L(mm)	Gas pipe 3(field supply) L(mm)	Gas pipe 4(field supply) L(mm)
8HP	130	165	59	237
10HP	100	135	83	225
12~18HP	66	101	149	213

2-2 Connection of pipes

- Connect the gas and liquid pipes as shown in the figure at the right. (When connecting the pipes, first connect the gas-side joint and the gas-side reducer (1), the liquid-side joint and the liquid-side reducer (1).)
- See the caution section in the installation manual attached to the outdoor unit for brazing pipes and connecting pipes with flare nuts.
- Install the joint in such a way that the attached face of the caution label becomes horizontal(See the View A).

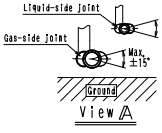

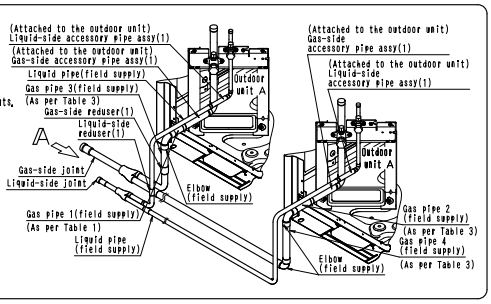

❸ The work after the kit is connected

Connection of piping between the outdoor unit and the indoor unit } Follow the instructions in the installation manual included with the outdoor unit, when performing installation work.

Air tight test

Insulation of joints

(1) Fit the insulation to the reducer and temporarily keep it in place with tape.
(2) Cut insulating tube along the slit. (See the figure at the right.) Fit the insulation to the joint and temporarily keep it in place with tape without leaving a gap between the insulation mating faces.
(3) Seal the seam between the insulation and the field supply piping insulation with the field supply tape.
(4) Wrap the tape around the insulation attached to the joint without leaving a gap. (▨ section shown in the figure at the right.)

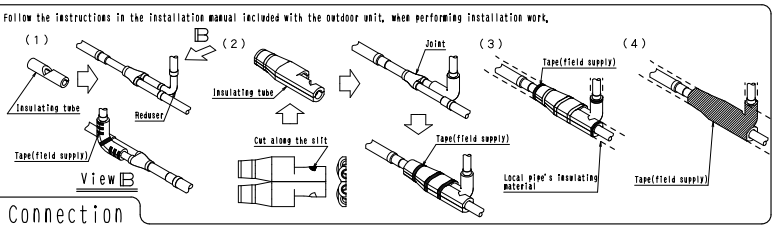

❶ Installation examples — Procedure for Bottom Connection

⚠Caution This installation is only possible if there is enough space to perform brazing and racking underneath the outdoor unit. If a centralized drain pan kit and/or vibration proof base are used, the dimensions marked with "✱" in the figure below will vary, so see the table below and determine the length of the field pipes.

1-1 Exterior view

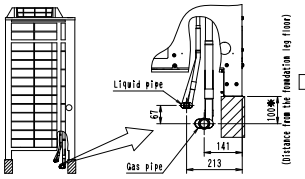

Separately-sold item also used	✱dimensions
Central drain pan kit	139
Vibration absorption stand	233
Vibration absorption stand+ central drain pan kit	

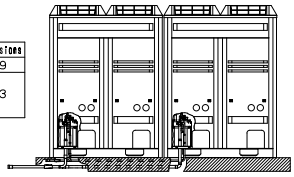

❷ Connection of gas and liquid pipes

2-1 Cutting the field supply gas pipe 1 and 2, and the Gas-side accessory pipe(3) attached to the outdoor unit

- Cut the pipes according to Table 4 or 5.

Caution
- The "L" dimensions of the gas pipe 1 in Table 4 and the gas pipe 2 in Table 5 are identical to the "B" dimensions in table 2, those of "field supply elbows" shown in the procedure of front connection, which are equivalent to "straight size joint" without stopper. If the "B" dimentions are not identical to table 2 or "straight size joint" is with sttoper, adjust them as table 2, 4 and 5 show.

■ Table 4 (For Outdoor unit A Side)

Model type	Gas-side accessory pipe(3) B(mm) ✱dimensions For 100	For 139	For 233	Gas pipe 1(field supply) L(mm) ✱dimensions For 100	For 139	For 233
8HP	102	63	48	unnecesary		79
10HP	72	33	25			86
12HP ~ 18HP	0 (no cutting)	53	0 (no cutting)		92	133

■ Table 5 (For Outdoor unit B Side)

Model type	Gas-side accessory pipe(3) B(mm) ✱dimensions For 100	For 139	For 233	Gas pipe 2(field supply) L(mm) ✱dimensions For 100	For 139	For 233
8HP	0 (no cutting)	0 (no cutting)	0 (no cutting)	76	115	209
10HP	18	0 (no cutting)	0 (no cutting)	88	109	203
12HP ~ 18HP	32	0 (no cutting)	0 (no cutting)	96	103	197

2-2 Connection of pipes

- Remove the knockout plate on the bottom frame. (See the installation manual attached to the outdoor unit)
- Connect the gas and liquid pipe as shown in the figure below. (When connecting the pipes, first connect the gas-side joint and the gas-side reducer(1), the liquid-side joint and the liquid-side reducer (1))
- See the caution section in the installation manual attached to the outdoor unit for brazing pipes and connecting pipes with flare nuts.
- Install the joint in such a way that the attached face of the caution label becomes horizontal. (See the view A)
- Connect the liquid side reducer(1) tilting approx. 10° and bend the field supplied liquid pipe up to the stop valve as shown in the figure below. (See the view A)

Caution
- If the liquid side reducer is connected vertically without bending the liquid pipes, the insulation will not fit.

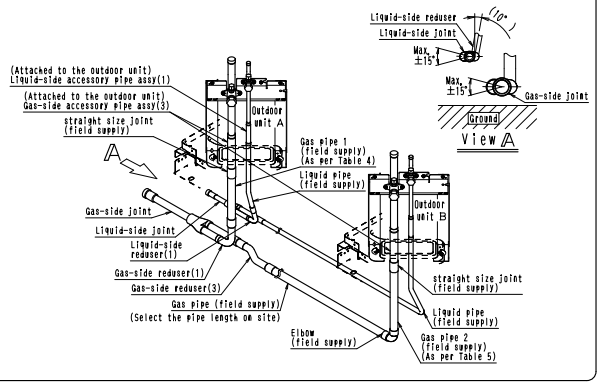

continue to reverse side

1P173261A

❸ The work after the kit is connected

Connection of piping between the outdoor unit and the indoor unit

Air tight test

Follow the instructions in the installation manual included with the outdoor unit, when performing installation work.

Insulation of joints

(1) Fit the insulation to the reducer and temporarily keep it in place with tape.
(2) Cut insulating tube along the slit. (See the figure at the right.)
Fit the insulation to the joint and temporarily keep it in place with tape without leaving a gap between the insulation mating faces.
(3) Seal the seam between the insulation and the field supply piping insulation with the field supply tape.
(4) Wrap the tape around the insulation attached to the joint without leaving a gap.
(▨ section shown in the figure at the right.)

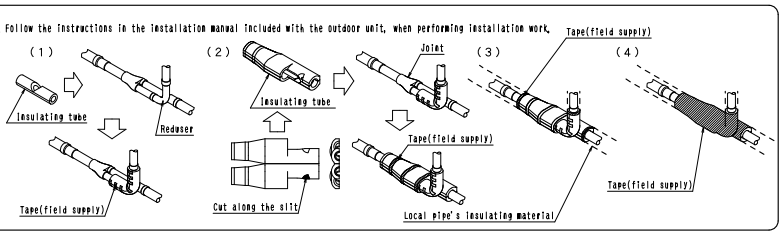

BHFP22P151 Installation Instructions

⚠Caution There are some restrictions on the interconnecting piping between the outdoor units. See the installation manual attached to the outdoor units and make sure to carry out proper piping. If the piping restrictions are not observed, it may result in malfunction of the unit.

Connecting Pipe Sizes and location of cutting the joint

Select cutting point of a joint or a reducer which is suitable for the size of the interconnecting pipes determined according to the table below and cut it with a pipe cutter.

Pipe between outdoor unit Multi Connection Piping Kit
● Select the pipe size according to the total capacity of the outdoor unit (unit B, C).

Main pipe
● Select the pipe size according to the total capacity of the outdoor unit to be connected upstream (unit A, B, C).

(units : mm)

Outdoor unit total capacity (unit A, B, C) or the total capacity of the outdoor unit to be connected upstream (unit B, C)	Pipe size (O.D. x min. thickness [temper grade])	
	Gas pipe	Liquid pipe
16HP	ϕ28.6×0.99[1/2H]	ϕ12.7×0.80[O]
18~22HP		ϕ15.9×0.99[O]
24HP	ϕ34.9×1.21[1/2H]	
26~34HP		ϕ19.1×0.80[1/2H]
36HP~	ϕ41.3×1.43[1/2H]	

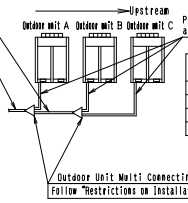

Pipe between the outdoor unit Multi Connection Piping Kit and the outdoor unit

(units:mm)

Outdoor unit capacity type	Pipe size (O.D. x min. thickness [temper grade])	
	Gas pipe	Liquid pipe
8HP	ϕ19.1×0.80[1/2H]	ϕ 9.5×0.80[O]
10HP	ϕ22.2×0.80[1/2H]	
12~16HP	ϕ28.6×0.99[1/2H]	ϕ12.7×0.80[O]
18HP		ϕ15.9×0.99[O]

Cutting procedure

• Use pipe cutter for cutting.

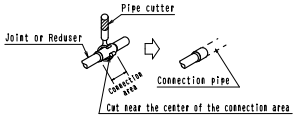

❶ Installation examples — Procedure for Front Connection

1-1 Exterior view

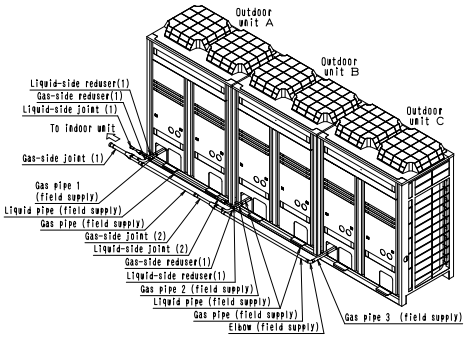

1-2 Finished dimensions

• For installations where the A dimensions exceed 284 mm, extend the field supply interconnecting pipe between the joint and the outdoor unit.

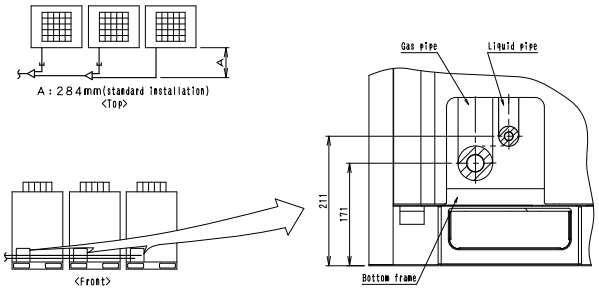

❷ Connection of gas and liquid pipes

2-1 Cutting the field supply gas pipes

• Cut the pipes according to Table 6.

Caution • This Table shows the case when the A dimensions shown in "1-2 Finished dimensions" is 284mm. If the A dimensions exceed 284mm, see Table 6 and adjust the dimensions of the gas pipe 1 and 2 and 3.
• The L dimensions of the gas pipe 3 in Table 6 show those when the field supply elbows have B dimension in Table 2 shown in BHFP22P151 Installation Instruction. 2 connection of gas and liquid pipes.
If the B dimensions are not same with Table 2, see Table 2 and 6, and adjust them accordingly.

■ Table 6

Model type	Gas pipe 1 (field supply) L (mm)	Gas pipe 2 (field supply) L (mm)	Gas pipe 3 (field supply) L (mm)
8HP	51	69	282
10HP	57	75	252
12~18HP	101	119	218

2-2 Connection of pipes

• Connect the gas and liquid pipes as shown in the figure at the right. When connecting the pipes, first connect the gas-side joint and the gas-side reducer(1), the liquid-side joint and the liquid side reducer(1).
• See "1-2 Finished dimensions" for the location(height) of the joint.
• See the caution section in the installation manual attached to the outdoor unit for brazing pipes and connecting pipes with flare nuts.
• Install the joint in such a way that the attached face of the caution label becomes holizontal (See the View A).

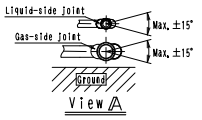

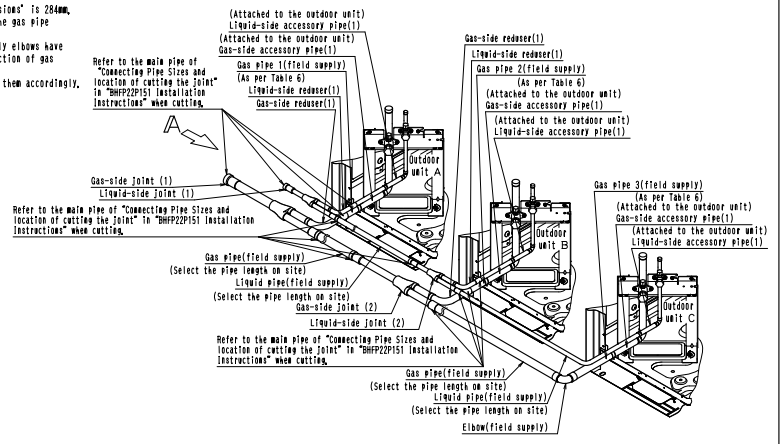

❸ The work after the kit is connected

Connection of piping between the outdoor unit and the indoor unit

Air tight test

Follow the instructions in the installation manual included with the outdoor unit, when performing installation work.

Insulation of joints

• See "The work after the kit is connected" for a front connection in "BHFP22P151 Installation Instructions."

1P173262A

❶ Installation examples — Procedure for Lower Front Connection

1-1 Exterior view

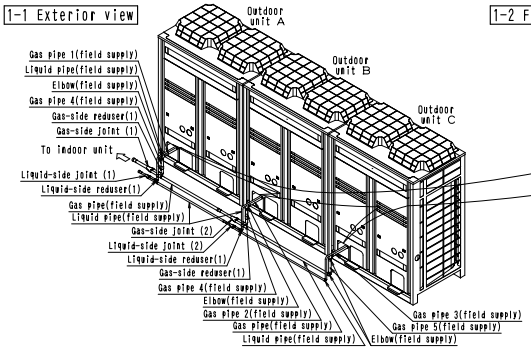

1-2 Finished dimensions

- A standard installation has the following dimensions.
- When the dimensions exceed the standard installation, extend the pipes between the outdoor unit and the joint. (field supply)

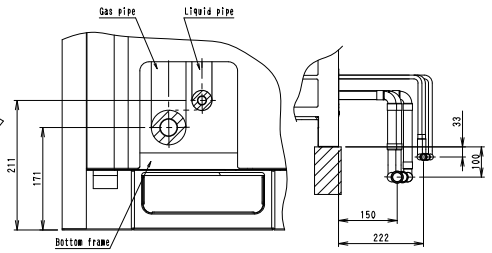

❷ Connection of gas and liquid pipes

2-1 Cutting the field supply gas pipes

- Cut the pipes according to Table 7.

Caution
- The L dimensions of the gas pipe 1 to 5 in Table 7 show those when the field supply elbows have B dimension in Table 2 shown in BHFP22P100 Installation Instruction. 2 Connection of gas and liquid pipes and the field supply joint for the same diameter pipes are without stopper.
  If the B dimensions are not same with Table 2 or the joint for the same diameter pipes have stopper, see Table 2 and 7, and adjust them accordingly.

■ Table7

Model type	Gas pipe 1(field supply) L(mm)	Gas pipe 2(field supply) L(mm)	Gas pipe 3(field supply) L(mm)
8HP	130	147	182
10HP	100	117	152
12~18HP	66	83	118

Model type	Gas pipe 4(field supply) L(mm)	Gas pipe 5(field supply) L(mm)
8HP	59	237
10HP	83	225
12~18HP	149	213

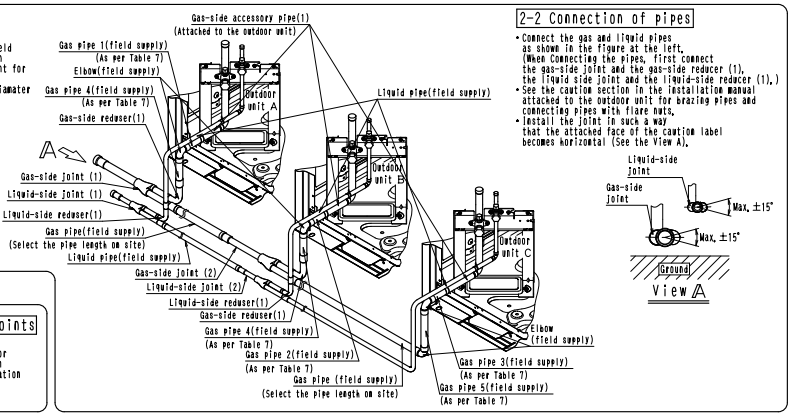

2-2 Connection of pipes

- Connect the gas and liquid pipes as shown in the figure at the left.
  (When connecting the pipes, first connect the gas-side joint and the gas-side reducer (1), the liquid side joint and the liquid-side reducer (1).)
- See the caution section in the installation manual attached to the outdoor unit for brazing pipes and connecting pipes with flare nuts.
- Install the joint in such a way that the attached face of the caution label becomes horizontal (See the View A).

❸ The work after the kit is connected

Connection of piping between the outdoor unit and the indoor unit
Air tight test
} Follow the instructions in the installation manual included with the outdoor unit, when performing installation work.

Insulation of joints
- See "The work after the kit is connected" for a lower front connection of "BHFP22P100 Installation Instructions."

❶ Installation examples — Procedure for Bottom Connection

⚠Caution This installation is only possible if there is enough space to perform brazing and racking underneath the outdoor unit. If a centralized drain pan kit and/or vibration proof base are used, the dimensions marked with "✱" in the figure below will vary, so see the table below and determine the length of the field pipes.

1-1 Exterior view

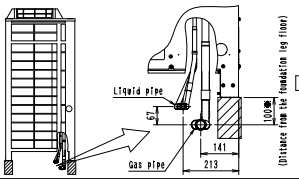

Separately-sold item also used	✱dimensions
Central drain pan kit	139
Vibration absorption stand	233
Vibration absorption stand+ central drain pan kit	

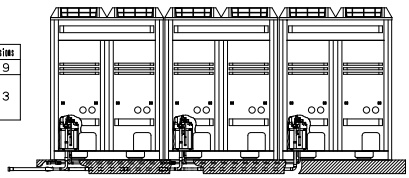

❷ Connection of gas and liquid pipes

2-1 Cutting the field supply gas pipe 1 and 2, and the Gas-side accessory pipe(3) attached to the outdoor unit

- Cut the pipes according to Table 8 or 9.

Caution
- The "L" dimensions of the gas pipe 1 in Table 8 and the gas pipe 2 in Table 9 are identical to the "B" dimensions in table 2, those of "field supply elbows" shown in the procedure of front connection, which are equivalent to "straight size joint" without stopper.
  If the "B" dimentions are not identical to table 2 or "straight size joint" is with sttopper, adjust them as table 2, 8 and 9 show.

■ Table 8 (For Outdoor unit A, B Side)

Model type	Gas-side accessory pipe(3) B(mm) ✱dimensions For 100	For 139	For 233	Gas pipe 1(field supply) L(mm) ✱dimensions For 100	For 139	For 233
8HP	102	63	48	unnecesary		79
10HP	72	33	25			86
12HP ~ 18HP	0 (no cutting)	53	0 (no cutting)		92	133

■ Table 9 (For Outdoor unit C Side)

Model type	Gas-side accessory pipe(3) B(mm) ✱dimensions For 100	For 139	For 233	Gas pipe 2(field supply) L(mm) ✱dimensions For 100	For 139	For 233
8HP	0 (no cutting)	0 (no cutting)	0 (no cutting)	76	115	209
10HP	18	0 (no cutting)	0 (no cutting)	88	109	203
12HP ~ 18HP	32	0 (no cutting)	0 (no cutting)	96	103	197

2-2 Connection of pipes

- Remove the knockout plate on the bottom frame.
  (See the installation manual attached to the outdoor unit)
- Connect the gas and liquid pipe as shown in the figure below. (When connecting the pipes, first connect the gas-side joint and the gas-side reducer(1), the liquid-side joint and the liquid-side reducer (1))
- See the caution section in the installation manual attached to the outdoor unit for brazing pipes and connecting pipes with flare nuts.
- Install the joint in such a way that the attached face of the caution label becomes horizontal. (See the view A)
- Connect the liquid side reducer(1) tilting approx. 10° and bend the field supplied liquid pipe up to the stop valve as shown in the figure below. (See the view A)

Caution
- If the liquid side reducer is connected vertically without bending the liquid pipes, the insulation will not fit.

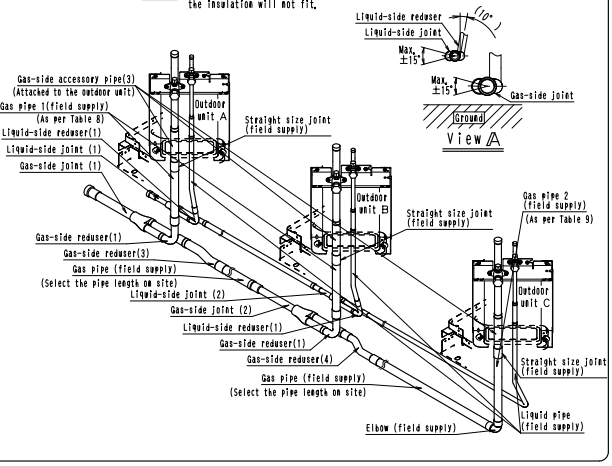

❸ The work after the kit is connected

Connection of piping between the outdoor unit and the indoor unit
Air tight test
} Follow the instructions in the installation manual included with the outdoor unit, when performing installation work.

Insulation of joints
- See "The work after the kit is connected" for a front connection in "BHFP22P100 Installation Instructions."

1P173262A

5.3 BHFP26P90 / 136

5.3.1 BHFP26P90

Unit (mm)

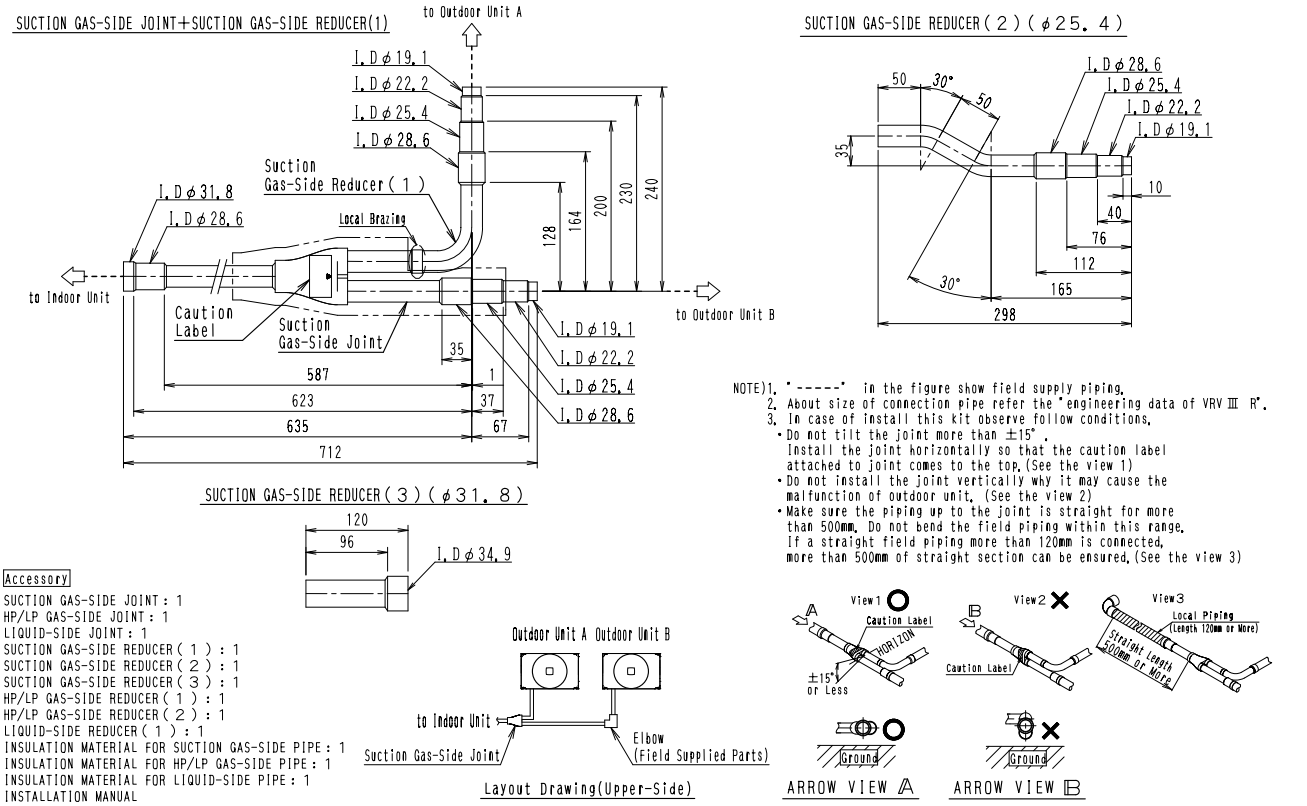

3D058276

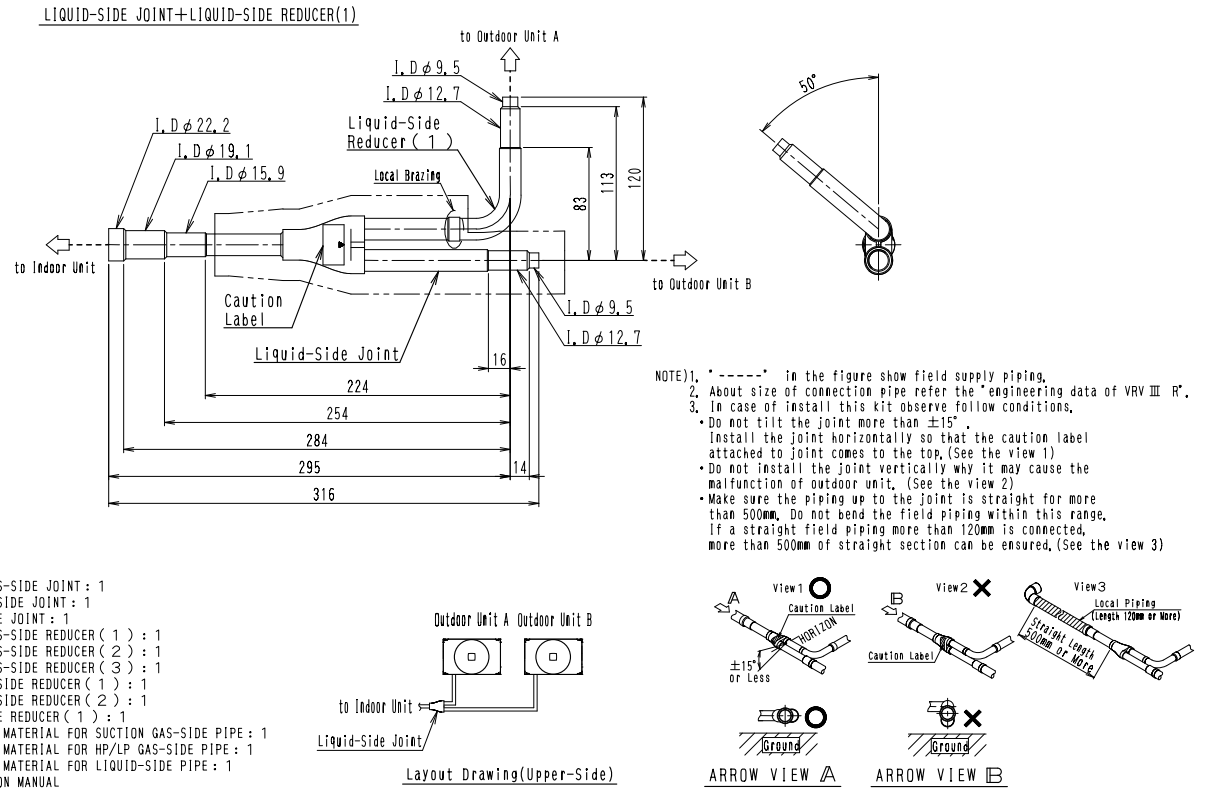

3D058277

Unit (mm)

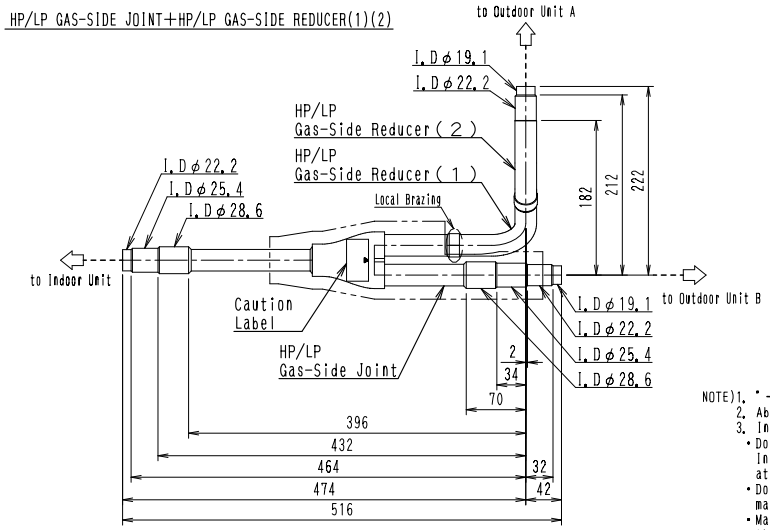

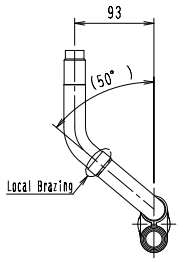

NOTE)1. "-----" in the figure show field supply piping.
2. About size of connection pipe refer the "engineering data of VRV Ⅲ R".
3. In case of install this kit observe follow conditions.
- Do not tilt the joint more than ±15°.
Install the joint horizontally so that the caution label attached to joint comes to the top.(See the view 1)
- Do not install the joint vertically why it may cause the malfunction of outdoor unit. (See the view 2)
- Make sure the piping up to the joint is straight for more than 500mm. Do not bend the field piping within this range. If a straight field piping more than 120mm is connected, more than 500mm of straight section can be ensured.(See the view 3)

Accessory

SUCTION GAS-SIDE JOINT : 1
HP/LP GAS-SIDE JOINT : 1
LIQUID-SIDE JOINT : 1
SUCTION GAS-SIDE REDUCER (1) : 1
SUCTION GAS-SIDE REDUCER (2) : 1
SUCTION GAS-SIDE REDUCER (3) : 1
HP/LP GAS-SIDE REDUCER (1) : 1
HP/LP GAS-SIDE REDUCER (2) : 1
LIQUID-SIDE REDUCER (1) : 1
INSULATION MATERIAL FOR SUCTION GAS-SIDE PIPE : 1
INSULATION MATERIAL FOR HP/LP GAS-SIDE PIPE : 1
INSULATION MATERIAL FOR LIQUID-SIDE PIPE : 1
INSTALLATION MANUAL

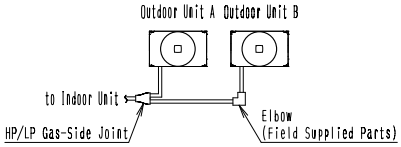

Layout Drawing(Upper-Side)

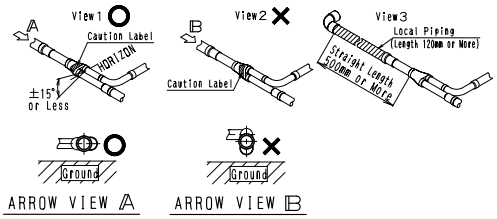

3D058278

Installation Manual

Component parts

■This kit contains the follwing parts. **<Do not throw away any of the accessories until installation is complete.>**

Kit name	SHAPE					
	Suction gas-side joint	HP/LP gas-side joint	Liquid-side joint	Suction gas-side reducer				Liquid-side reducer
BHFP26GP90	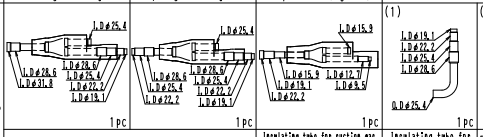 1pc	1pc	1pc	(1) 1pc	(2) 1pc	(3) 1pc	(1) 1pc
	HP/LP gas-side reducer		Insulating tube for suction gas pipe or HP/LP gas pipe	Insulating tube for liquid pipe			
	(1) 1pc	(2) 1pc	2pc	1pc			

Caution
- Please be sure to read this manual before installation and follow the instruction carefully when performing installation work.
- See the outdoor unit's installation manual for outdoor unit installation.
- Installation of interconnecting piping between the outdoor and indoor units, REFNET joint or REFNET header will be needed separately.

Selection Procedure

Number of outdoor units connected	2 units
Outdoor unit Multi Connection Piping Kit	BHFP26P90

- 2 outdoor units can be connected.
- There are restrictions on the combination and the installation order of outdoor units, so please refer to "the Engineering Data of VRV Ⅲ H" and "the Installation manual" (attached sheet of outdoor unit) for details.

Field supply parts

■The following parts are needed to connect this kit and are not included.

Field supply parts			
Name		Q'ty	Selection Procedure
Insulation for piping Connection piping		1set	See the "Connecting pipe sizes and location of cutting the joint" for details on the necessary size.
Elbow	Suction gas-pipe	1pc	Prepare a gas pipe diameter for the upper outdoor unit as listed in "Connecting Pipe Sizes and location of cutting the joint."
	HP/LP gas-pipe	2pc	
	Equalizer pipe	4pc	
Tape		1set	For insulation materials

Caution
- Quantity and selection procedure of elbow only applies to a front connection.
- For a lower front connection, the quantity and selection procedure are different, so please refer to the Instructions for a lower front connection.
- Straight size joints is needed only for a bottom connection. See the Instructions for the bottom connection for details on quantity and specifications.

⚠To the pipeing installer When installing this kit, please apply the following restrictions.

Restrictions on Installing Multi Connection Piping Kit

- Install the joint horizontally so that the caution label attached to joint comes to the top. Do not tilt the joint more than ±15° (See Fig. 1). In addition, do not install the joint vertically(See Fig. 2).
- Make sure the piping up to the joint is straight for more than 500mm. Do not bend the field piping within this range. If a straight field piping more than 120mm is connected, more than 500mm of straight section can be ensured(See Fig. 3).
- Improper installation may lead to malfunction of the outdoor unit.

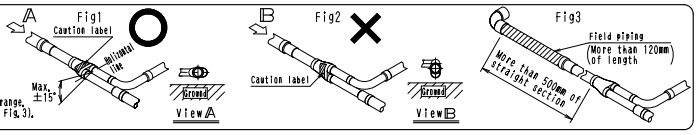

<Caution>
- When installing the multi system, connect the units as shown in the figure at the right order. If install the system with different order, the Outdoor unit multi connection piping kit may not suit and some pipe size reducer(field supply) may be required.
- If the total capacity of the connected indoor units exceeds the capacity of the outdoor unit, cooling and heating performance may drop when running the indoor units. See the capacity table in the Engineering Data Book for details.

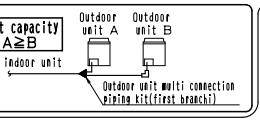

Connecting pipe sizes and location of cutting the joint

- If the pipe size of φ19.1 or larger is used, the O material may be insufficient to withstand the specified pressure. Therefore, make sure to use the 1/2H material with thickness of 1.0mm or more. When using the O material for the pipe size of φ19.1, a thickness of 1.2 or more is required. In this case, the connection must be brazed.

Select cutting point of a joint or a reducer which is suitable for the size of the interconnecting pipes determined according to the table below and cut it with a pipe cutter.

● Select the pipe size according to the total capacity of outdoor unit. (units : mm)

Outdoor unit total capacity type	Pipe size (O.D. × min. thickness [temper grade])		
	Suction gas pipe	HP/LP gas pipe	Liquid pipe
18HP	φ28.6×1.0[1/2H]	φ22.2×1.0[1/2H]	φ15.9×1.0[O]
20~22HP			
24HP	φ34.9×1.21[1/2H]	φ28.6×1.0[1/2H]	
26~32HP			φ19.1×1.0[1/2H]

Main pipe

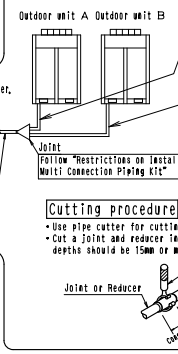

Pipe between the joint and the outdoor unit A (units : mm)

Outdoor unit total capacity type	Pipe size (O.D. × min. thickness [temper grade])		
	Suction gas pipe	HP/LP gas pipe	Liquid pipe
18HP	φ22.2×1.0[1/2H]	φ19.1×1.0[1/2H]	φ 9.5×0.8[O]
20~24HP	φ28.6×1.0[1/2H]		
26~32HP		φ22.2×1.0[1/2H]	φ12.7×0.8[O]

Pipe between the joint and the outdoor unit B (units : mm)

Outdoor unit total capacity type	Pipe size (O.D. × min. thickness [temper grade])		
	Suction gas pipe	HP/LP gas pipe	Liquid pipe
18~22・26HP	φ22.2×1.0[1/2H]	φ19.1×1.0[1/2H]	φ 9.5×0.8[O]
24・28HP	φ28.6×1.0[1/2H]		
30・32HP		φ22.2×1.0[1/2H]	φ12.7×0.8[O]

When reducer is used

- Suction gas-side reducer(3) may be used on the Suction gas-side joint see the figure at the right for details of connection.

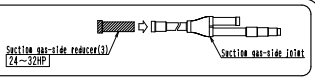

Cutting procedure

- Use pipe cutter for cutting.
- Cut a joint and reducer in order that their fit depths should be 15mm or more.

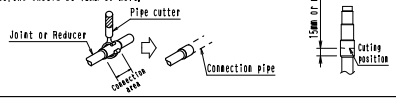

❶ Installation examples — Procedure for Front Connection

1-1 Exterior view

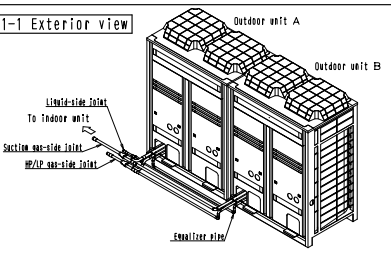

1-2 Finished dimensions

- For installations where the A dimensions exceed 300mm, extend the field supply interconnecting pipe between the joint and the outdoor unit.

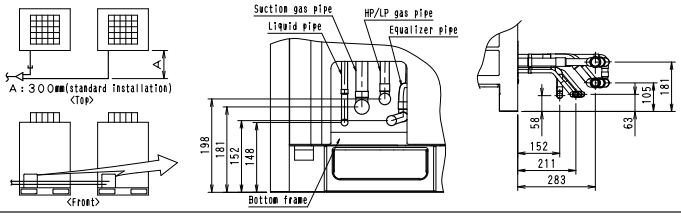

❷ Connection of suction gas-side and HP/LP gas-side pipe

2-1 Cutting the field supply Suction gas-side and HP/LP gas-side pipe

- Cut the Suction gas pipe or HP/LP gas pipe(field supply) according to Table 1, 2.

Caution
- This table shows where A dimension is 300mm by 1-2 finished dimensions. If its installation exceeds 300mm, see Table 1 and 2 and adjust Suction gas pipe 1 and 2 and HP/LP gas pipe 1, 2, and 3.
- The L dimensions of the Suction gas pipe 1 and 2 in Table 1 and HP/LP gas pipe 1, 2, and 3 in Table 2 are applied to where B dimensions of elbows are shown as in Table 3 or Table 4. If B dimension is different from the dimensions in the table, see Table 1 and 2 and adjust them.

■ Table1

Model type	Suction gas pipe 1(field supply) L (mm)	Suction gas pipe 2(field supply) L (mm)
18HP	61	238
20・22HP	135	238
24HP	135	234
26HP	135	238
28~32HP	135	234

■ Table2

Model type	HP/LP gas pipe 1(field supply) L (mm)	HP/LP gas pipe 2(field supply) L (mm)	HP/LP gas pipe 3(field supply) L (mm)
18~24HP	50	245	59
26・28HP	80	245	59
30・32HP	80	239	47

■ Table3

Model type	Elbow 1(field supply) B (mm)
18~22HP	23
24HP	29
26HP	23
28~32HP	29

■ Table4

Model type	Elbow 2(field supply) B (mm)
18~28HP	17
30・32HP	23

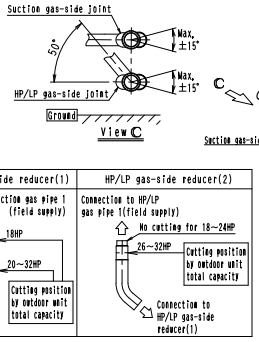

2-2 Connection of pipes

- Connect the Suction gas-side and HP/LP gas-side pipes as following the procedure on the below figure. (For connection of pipes, at first, connect Suction gas-side joint with Suction gas-side reducer (1) and HP/LP gas-side joint with HP/LP gas-side reducer (1) and (2).)
- See 1-2 finished dimensions for the location (height) of the joints.
- See the caution section in the installation manual attached to the outdoor unit for brazing pipes.
- Install the joints so that an attached face of the caution label keeps horizontal. (See the view C)
- Refer of both Cutting procedure for the cuting position of both joint and reducer.

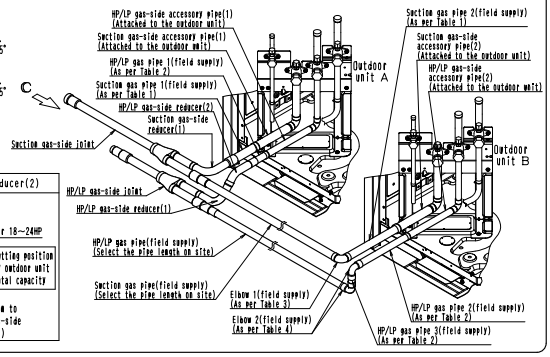

1P206370B

❸ Connection of Liquid-side and equalizer pipe

3-1 Cutting the field supply Liquid-side and equalizer pipe

- Cut the equalizer pipe(field supply) according to Table 1.

Caution
- This table shows the case when the A dimensions shown in 1-2 Finished dimensions is 300mm. If the A dimensions exceed 300mm, see Table 1 and adjust the dimensions of the equalizer pipe 1 and 2.
- The L dimensions of the equalizer pipe 1 and 2 in Table 1 show those when the field supply elbows have B dimension in Table 2. If the B dimension is not same with Table 2, see Table 1, and adjust them accordingly.

3-2 Connection of pipes

- Connect the liquid-side and equalizer pipes as shown in the right figure. (For connection of pipes, at first, connect Liquid-side joint with Liquid-side reducer (1).)
- See 1-2 Finished dimensions for the location (height) of the joint.
- See the caution section in the Installation manual attached to the outdoor unit for brazing pipes.
- Connect Liquid-side reducer (1) as at about 40° inclination and bend the field supplied liquid pipe up to the stop valve as following the procedure on right figure.
- Refer of both Cutting procedure for the cutting position of both joint and reducer.

Caution
- If the liquid side reducer is connected horizontally without bending the liquid pipes, the insulation will not fit.

■ Table1

Equalizer pipe 1(field supply) L(mm)	Equalizer pipe 2(field supply) L(mm)
95	60

■ Table2

Elbow(field supply) B(mm)
17

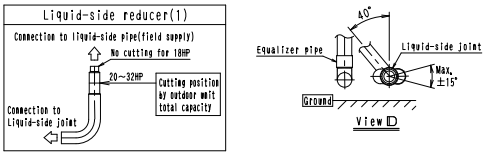

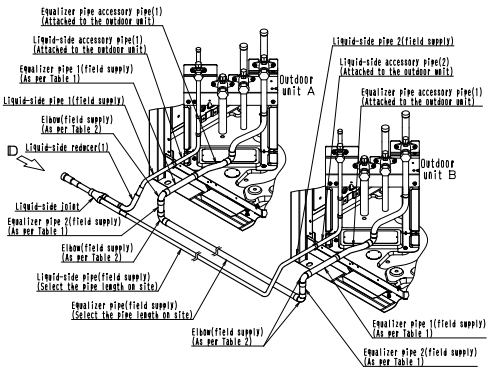

❹ The work after the kit is connected

Connection of piping between the outdoor unit and the indoor unit
Air tight test
} Follow the instructions in the installation manual included with the outdoor unit, when performing installation work.

Insulation of joints

(1) Fit the insulating tube to the reducer and temporarily keep it in place with tape.
(2) Fit the insulation to the joint and temporarily keep it in place with tape without leaving a gap between the insulation matieg faces. (See the figure at the right.)
(3) Seal the seam between the insulation and the field supply piping insulation with the field supply tape.
(4) Wrap the tape around the insulation attached to the joint without leaving a gap. (▨ section shown in the figure at the right.)

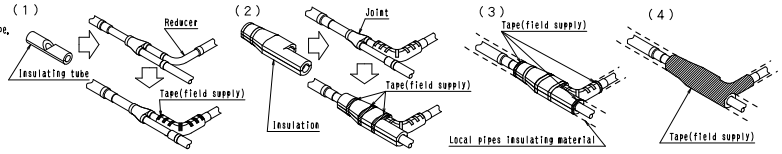

❶ Installation examples — Procedure for Lower Front Connection

1-1 Exterior view

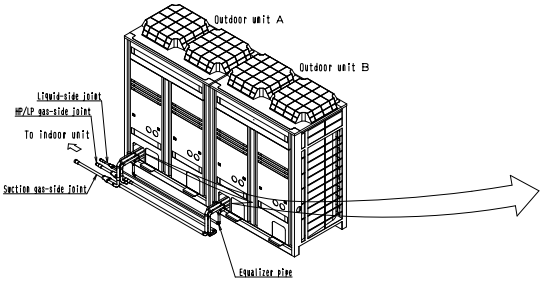

1-2 Finished dimensions

- A standard installation has the following dimensions.
- When the dimensions exceed the standard installation, extend the pipes between the outdoor unit and the joint(field supply).

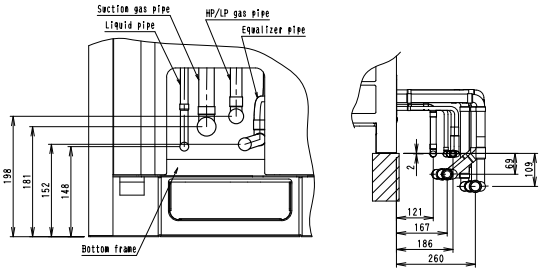

❷ Connection of suction gas-side and HP/LP gas-side pipe

2-1 Cutting the field supply Suction gas-side and HP/LP gas-side pipe

- Cut the according to Table 1, 2.

Caution
- The L dimensions of Suction gas pipe 1~4 in Table 1 and HP/LP gas pipe 1~5 in Table 2 show those when the field supply elbows have B dimension in Table 3 and Table 4. If the B dimension is not same with Table 3 and Table 4, see Table 1 and 2, and adjust them accordingly.

■ Table1

Model type	Suction gas pipe 1(field supply) L(mm)	Suction gas pipe 2(field supply) L(mm)	Suction gas pipe 3(field supply) L(mm)	Suction gas pipe 4(field supply) L(mm)
18HP	216	181	102	244
20・22HP	212	177	168	232
24HP		181		244
26HP		177		232
28~32HP				

■ Table2

Model type	HP/LP gas pipe 1(field supply) L(mm)	HP/LP gas pipe 2(field supply) L(mm)	HP/LP gas pipe 3(field supply) L(mm)	HP/LP gas pipe 4(field supply) L(mm)	HP/LP gas pipe 5(field supply) L(mm)
18~24HP	223	193	73	233	64
26・28HP	217		97		
30・32HP		187		221	52

■ Table3

Model type	Elbow 1(field supply) B(mm)	Elbow 2(field supply) B(mm)
18HP	23	23
20・22HP	29	
24HP		29
26HP		23
30~32HP		29

■ Table4

Model type	Elbow 3(field supply) B(mm)	Elbow 4(field supply) B(mm)
18~24HP	17	17
26・28HP	23	
30・32HP		23

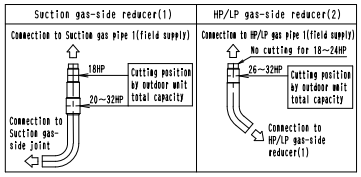

2-2 Connection of pipes

- Connect the suction gas-side and HP/LP gas-side pipes as shown in the below figure. (When connecting the pipes, first connect Suction gas-side joint and Suction gas-side reducer(1), HP/LP gas-side joint and HP/LP gas-side reducer(1).)
- See 1-2 Finished dimensions for the location(height) of the joints.
- See the caution section in the Installation manual attached to the outdoor unit for brazing pipes.
- Install the joint so that an attached face of the caution label keeps horizontal(See the View E).
- Refer of both Cutting procedure for the cutting position of both joint and reducer.

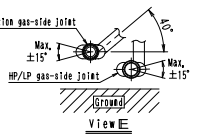

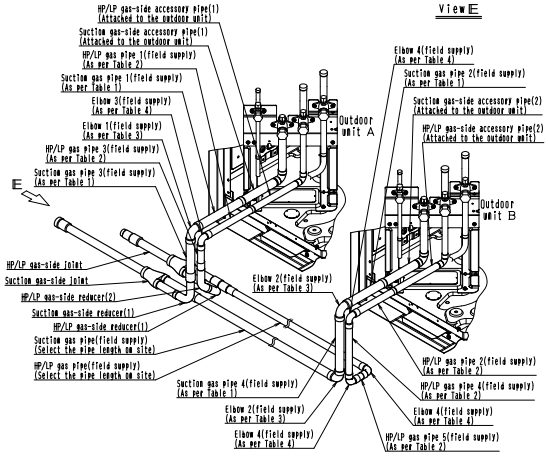

continue to reverse side

1P206370B

❸ Connection of Liquid-side and equalizer pipe

3-1 Cutting the field supply Liquid-side and equalizer pipe

- Cut the equalizer pipe(field supply) according to Table 1.

Caution
- This table shows the case when the A dimensions shown in 1-2 Finished dimensions is 300mm. If the A dimensions exceed 300mm, see Table 1 and adjust the dimensions of Equalizer pipe 1 and 2.
- The L dimensions of Equalizer pipe 1 and 2 in Table 1 show those when the field supply elbows have B dimension in Table 2 shown in "procedure for front connection" and "connection of Liquid-side and equalizer pipe". If the B dimension is not same with Table, see Table 1 and 2, and adjust them accordingly.

3-2 Connection of pipes

- Connect the liquid-side and equalizer pipe as shown in the right figure. (When connecting the pipes, first connect Liquid-side joint and Liquid side reducer(1).)
- See 1-2 Finished dimensions for the location(height) of the joint.
- See the caution section in the installation manual attached to the outdoor unit for brazing pipes.
- Install the joint in such a way that the attached face of the caution label becomes horizontal(See the View F).
- Connect the liquid side reducer(1) tilting approx. 90° and bend the field supplied liquid pipe up to the stop valve as shown in the figure below. (See the view F)
- Refer of both Cutting procedure for the cuting position of both joint and reducer.

Caution • If the liquid side reducer is connected vertically without bending the liquid pipes, the insulation will not fit.

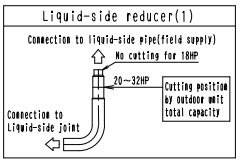

■ Table 1

Equalizer pipe 1(field supply) L(mm)	Equalizer pipe 2(field supply) L(mm)
95	120

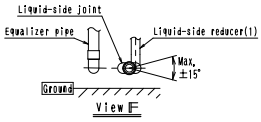

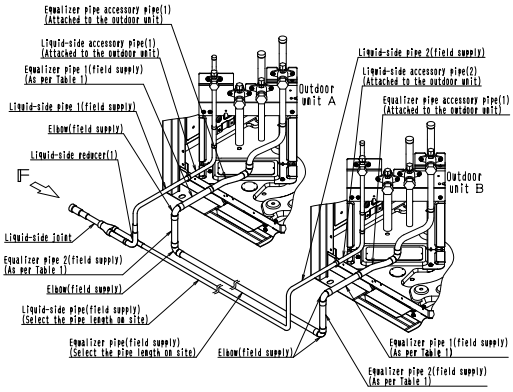

❹ The work after the kit is connected

Connection of piping between the outdoor unit and the indoor unit
Air tight test
} Follow the instructions in the installation manual included with the outdoor unit, when performing installation work.

Insulation of joints

(1) Fit the insulating tube to the reducer and temporarily keep it in place with tape.
(2) Cut insulating tube along the slit. (See the figure at the right.)
Fit the insulation to the joint and temporarily keep it in place with tape without leaving a gap between the insulation mating faces.
(3) Seal the seam between the insulation and the field supply piping insulation with the field supply tape.
(4) Wrap the tape around the insulation attached to the joint without leaving a gap. (▨ section shown in the figure at the right.)

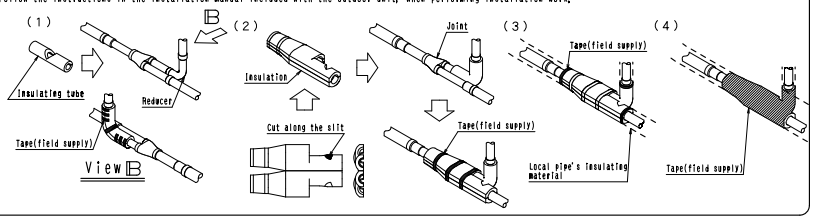

❶ Installation examples — Procedure for Bottom Connection

Caution This installation is only possible if there is enough space to perform brazing and racking underneath the outdoor unit. If a centralized vibration proof base are used, the dimensions marked with "✻" in the figure below will vary, so see the table below and determine the length of the field pipes.

1-1 Exterior view

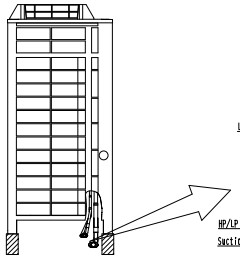

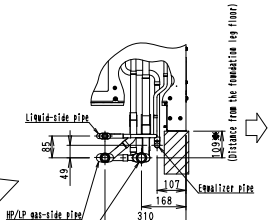

Separately-sold item also used	✻dimensions
Vibration absorption stand	233

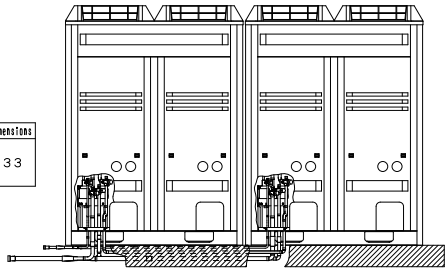

❷ Connection of suction gas-side and HP/LP gas-side pipe

2-1 Cutting the field supply suction gas-side pipe and HP/LP gas-side pipe and the suction gas-side accessory pipe(2) attached to the outdoor unit

- Cut the pipes according to Table 1 or 2.

Caution
- The "L" dimensions of Suction gas pipe 1 in Table 1 and the HP/LP gas pipe 1~3 in Table 2 are identical to the "B" dimensions in Table 3 and Table 4, those of "field supply elbows" shown in "Procedure for front connection" and "Connection of suction gas-side and HP/LP gas-side pipe", which are equivalent to "straight size joint" with stopper. If the "B" dimensions are not identical to table or "straight size joint" is without sttopper, adjust them as Table 1 and Table 2 show.

■ Table 1 (For Outdoor unit B Side)

Model type	Suction gas-side accessory pipe(2) (Attached to the outdoor unit) L(mm)	Suction gas pipe 1(field supply) L(mm)
18~22HP	0 (no cutting)	137
24HP	41	98
26HP	0 (no cutting)	137
28~32HP	41	98

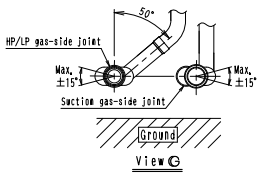

■ Table2

Model type	HP/LP gas pipe 1(field supply) L(mm)	HP/LP gas pipe 2(field supply) L(mm)	HP/LP gas pipe 3(field supply) L(mm)
18~28HP	155	86	94
30・32HP	119	110	82

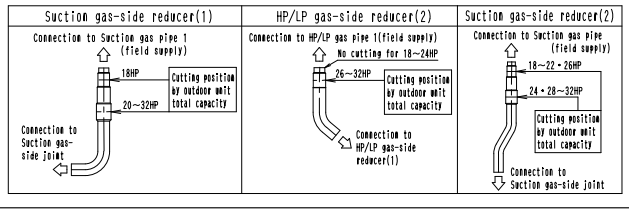

2-2 Connection of pipes

- Remove the knockout plate on the bottom frame. (See the installation manual attached to the outdoor unit)
- Connect the suction gas-side and HP/LP gas-side pipe as shown in the figure below. (When connecting the pipes, first connect the suction gas-side joint and the suction gas-side reducer(1), the HP/LP gas-side joint and the HP/LP gas-side reducer (1))
- See the caution section in the installation manual attached to the outdoor unit for brazing pipes.
- Install the joint so that an attached face of the caution label keeps horizontal. (See the view G)
- Connect HP/LP gas-side reducer(1) as at about. 50° inclination and connect HP/LP gas-side reducer(2). (See the view G)
- Refer of both Cutting procedure for the cuting position of both joint and reducer.

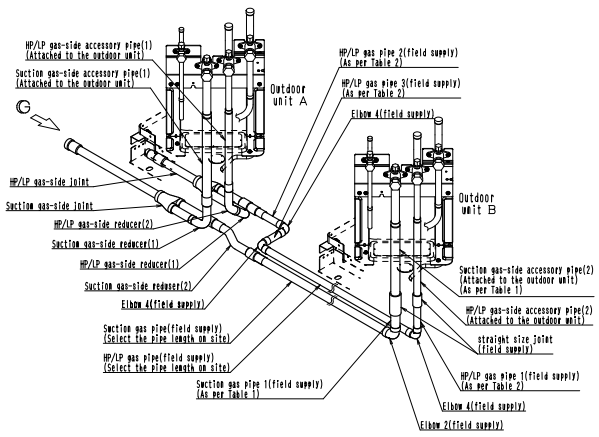

1P206371B

❸ Connection of Liquid-side and equalizer pipe

3-1 Connection of pipes

- Remove the knockout plate on the bottom frame. (See the installation manual attached to the outdoor unit)
- Connect the liquid and equalizer pipes as shown in the figure below. (When connecting the pipes, first connect Liquid-side joint and Liquid-side reducer (1))
- See the caution section in the installation manual attached to the outdoor unit for brazing pipes.
- Install the joint so that an attached face of the caution label keeps horizontal. (See the view H)
- Bend the field supplied liquid pipe up to the stop valve as shown in the right figure. (See the view H)
- Refer of both Cutting procedure for the cuting position of both joint and reducer.

Caution • If the liquid side reducer is connected vertically without bending the liquid pipes, the insulation will not fit.

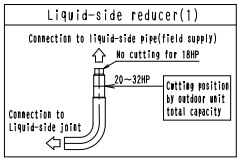

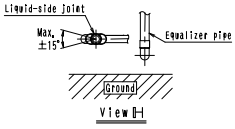

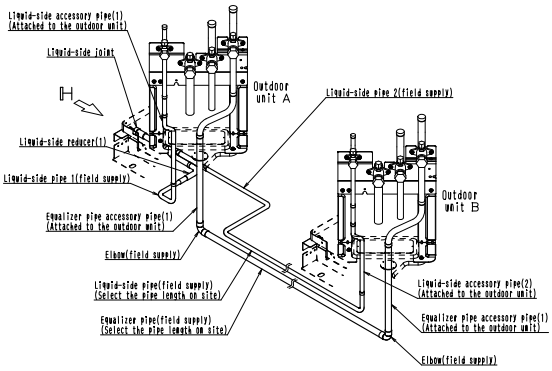

❹ The work after the kit is connected

Connection of piping between the outdoor unit and the indoor unit

Air tight test

} Follow the instructions in the installation manual included with the outdoor unit, when performing installation work.

Insulation of joints

(1) Fit the insulating tube to the reducer and temporarily keep it in place with tape.
(2) Cut insulating tube along the slit. (See the figure at the right.)
Fit the insulation to the joint and temporarily keep it in place with tape without leaving a gap between the insulation mating faces.
(3) Seal the seam between the insulation and the field supply piping insulation with the field supply tape.
(4) Wrap the tape around the insulation attached to the joint without leaving a gap. (▨ section shown in the figure at the right.)

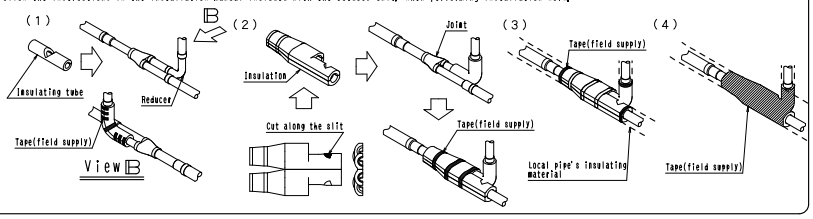

1P206371B

5.3.2 BHFP26P136

Unit (mm)

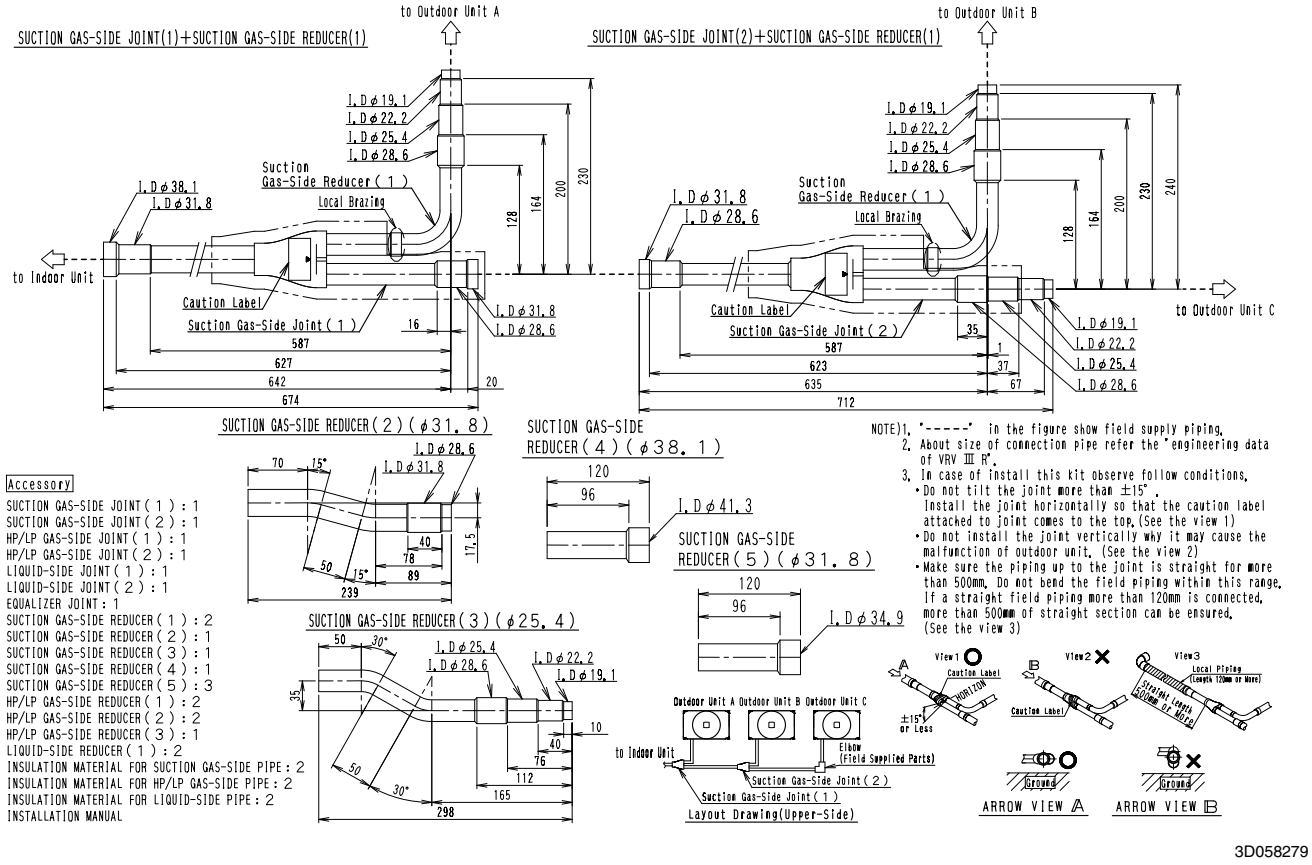

3D058279

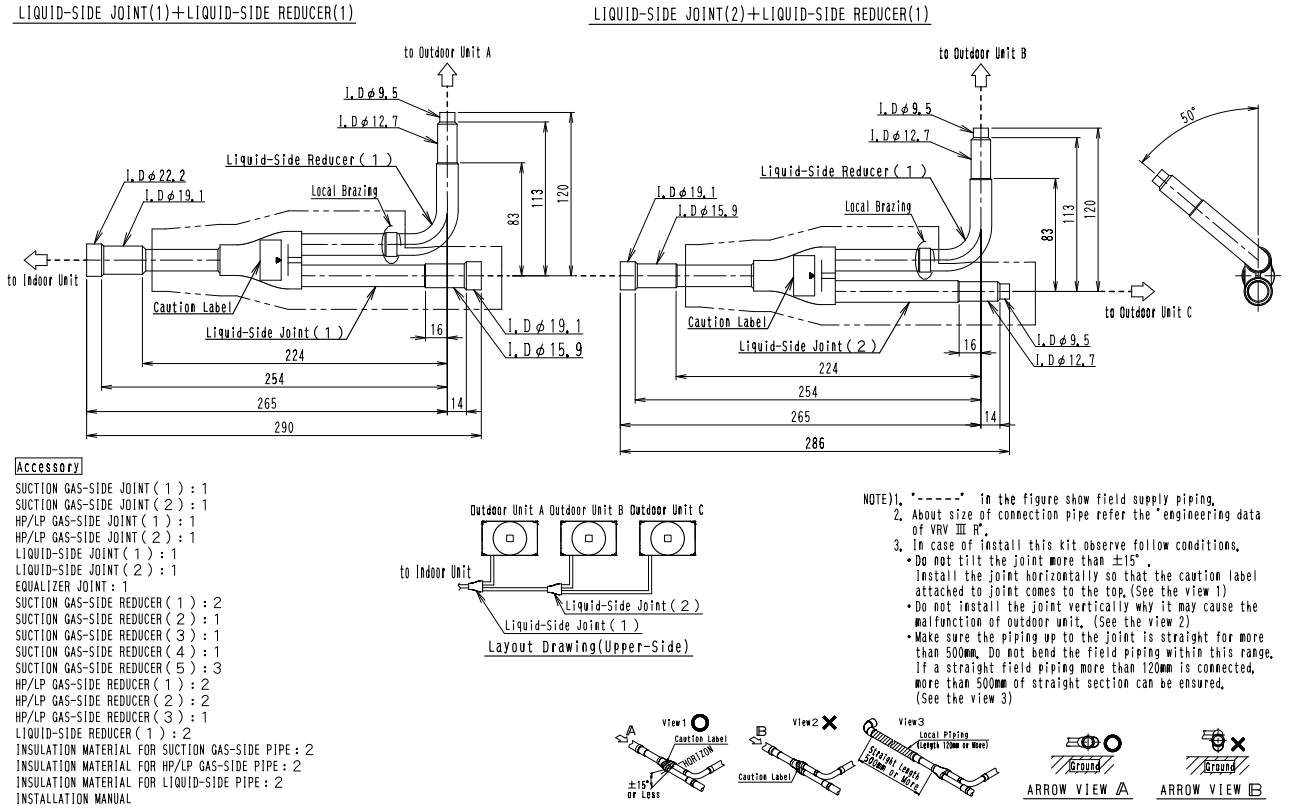

3D058280

Unit (mm)

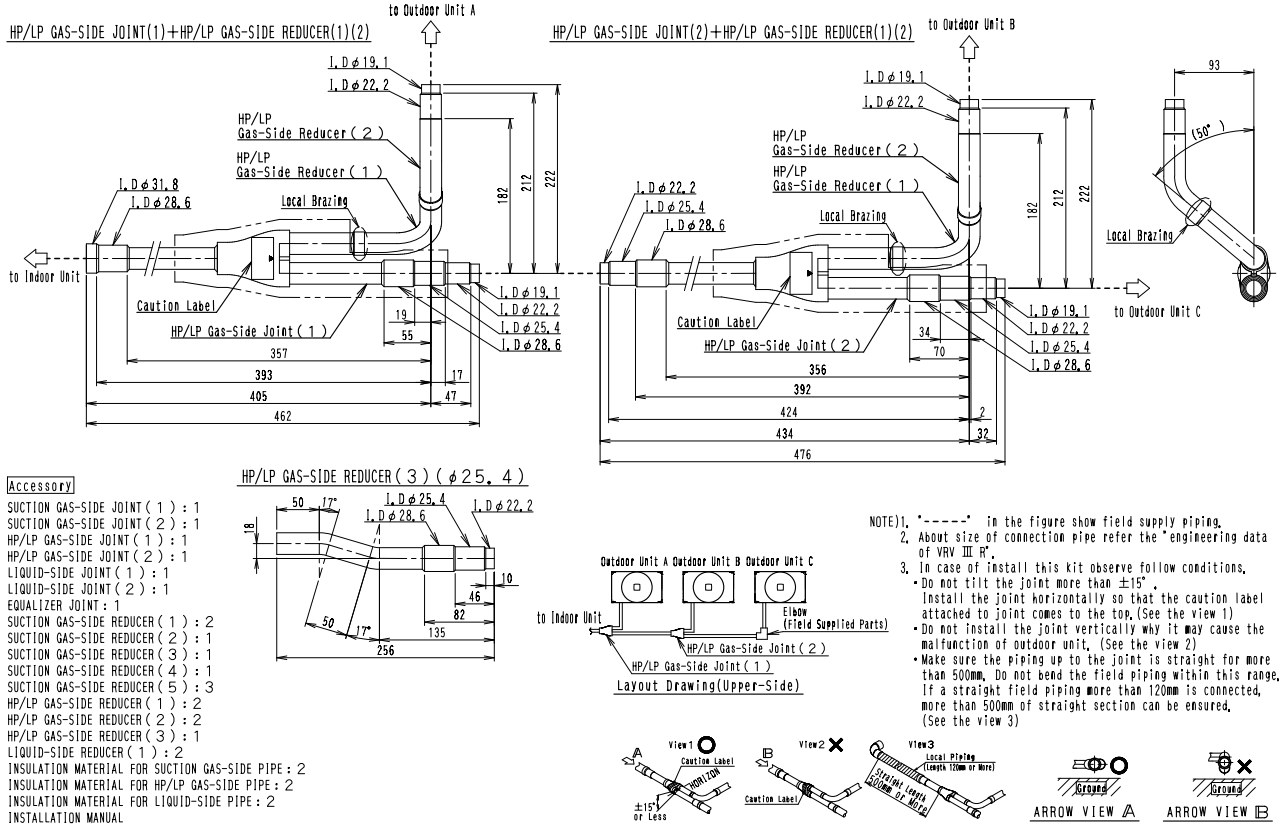

Accessory

SUCTION GAS-SIDE JOINT (1) : 1
SUCTION GAS-SIDE JOINT (2) : 1
HP/LP GAS-SIDE JOINT (1) : 1
HP/LP GAS-SIDE JOINT (2) : 1
LIQUID-SIDE JOINT (1) : 1
LIQUID-SIDE JOINT (2) : 1
EQUALIZER JOINT : 1
SUCTION GAS-SIDE REDUCER (1) : 2
SUCTION GAS-SIDE REDUCER (2) : 1
SUCTION GAS-SIDE REDUCER (3) : 1
SUCTION GAS-SIDE REDUCER (4) : 1
SUCTION GAS-SIDE REDUCER (5) : 3
HP/LP GAS-SIDE REDUCER (1) : 2
HP/LP GAS-SIDE REDUCER (2) : 2
HP/LP GAS-SIDE REDUCER (3) : 1
LIQUID-SIDE REDUCER (1) : 2
INSULATION MATERIAL FOR SUCTION GAS-SIDE PIPE : 2
INSULATION MATERIAL FOR HP/LP GAS-SIDE PIPE : 2
INSULATION MATERIAL FOR LIQUID-SIDE PIPE : 2
INSTALLATION MANUAL

NOTE) 1. "-----" in the figure show field supply piping.
2. About size of connection pipe refer the "engineering data of VRV Ⅲ R".
3. In case of install this kit observe follow conditions.
- Do not tilt the joint more than ±15°.
Install the joint horizontally so that the caution label attached to joint comes to the top. (See the view 1)
- Do not install the joint vertically why it may cause the malfunction of outdoor unit. (See the view 2)
- Make sure the piping up to the joint is straight for more than 500mm. Do not bend the field piping within this range. If a straight field piping more than 120mm is connected, more than 500mm of straight section can be ensured. (See the view 3)

3D058281

Installation Manual

Component parts

■This kit contains the following parts. **<Do not throw away any of the accessories until installation is complete.>**

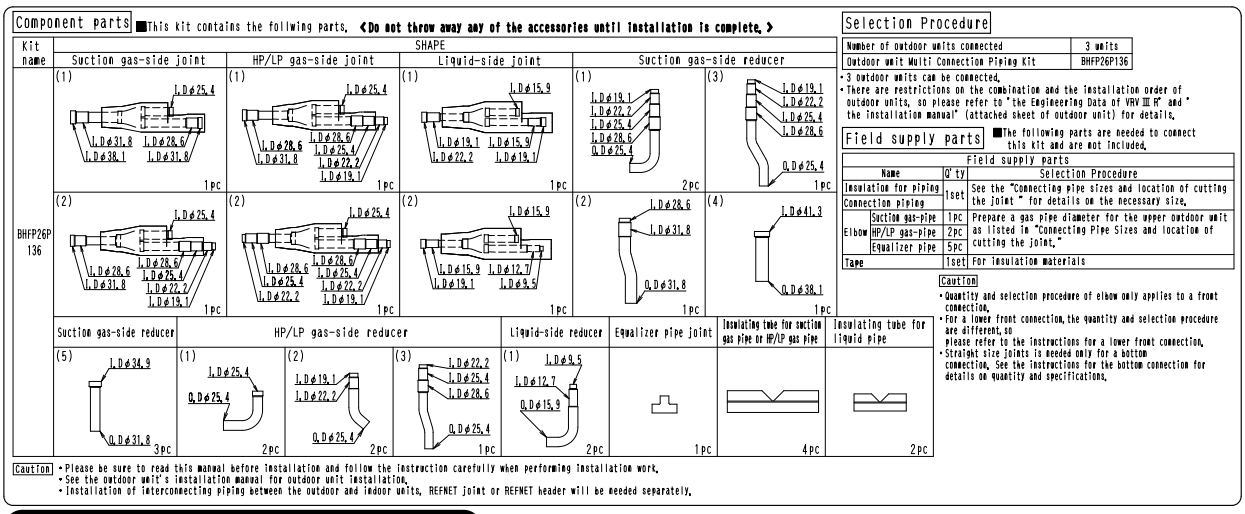

Caution
- Please be sure to read this manual before installation and follow the instruction carefully when performing installation work.
- See the outdoor unit's installation manual for outdoor unit installation.
- Installation of interconnecting piping between the outdoor and indoor units, REFNET joint or REFNET header will be needed separately.

Selection Procedure

Number of outdoor units connected	3 units
Outdoor unit Multi Connection Piping Kit	BHFP26P136

- 3 outdoor units can be connected.
- There are restrictions on the combination and the installation order of outdoor units, so please refer to "the Engineering Data of VRV III H" and "the installation manual" (attached sheet of outdoor unit) for details.

Field supply parts

■The following parts are needed to connect this kit and are not included.

Field supply parts			
Name		Q'ty	Selection Procedure
Insulation for piping		1set	See the "Connecting pipe sizes and location of cutting the joint" for details on the necessary size.
Connection piping			
	Suction gas-pipe	1pc	Prepare a gas pipe diameter for the upper outdoor unit as listed in "Connecting Pipe Sizes and location of cutting the joint."
Elbow	HP/LP gas-pipe	2pc	
	Equalizer pipe	5pc	
Tape		1set	For insulation materials

Caution
- Quantity and selection procedure of elbow only applies to a front connection.
- For a lower front connection, the quantity and selection procedure are different, so please refer to the instructions for a lower front connection.
- Straight size joints is needed only for a bottom connection. See the instructions for the bottom connection for details on quantity and specifications.

⚠To the piping installer When installing this kit, please apply the following restrictions.

Restrictions on Installing Multi Connection Piping Kit

- Install the joint horizontally so that the caution label attached to joint comes to the top. Do not tilt the joint more than ±15° (See Fig. 1). In addition, do not install the joint vertically(See Fig. 2).
- Make sure the piping up to the joint is straight for more than 500mm. Do not bend the field piping within this range. If a straight field piping more than 120mm is connected, more than 500mm of straight section can be ensured(See Fig. 3).
- Improper installation may lead to malfunction of the outdoor unit.

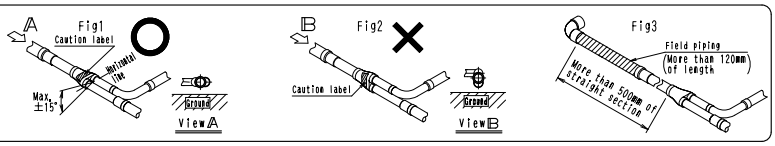

<Caution>
- When installing the multi system, connect the units as shown in the figure at the right order. If install the system with different order, the Outdoor unit multi connection piping kit may not suit and some pipe size reducer(field supply) may be required.
- If the total capacity of the connected indoor units exceeds the capacity of the outdoor unit, cooling and heating performance may drop when running the indoor units. See the capacity table in the Engineering Data Book for details.

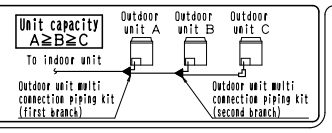

Connecting pipe sizes and location of cutting the joint

Select cutting point of a joint or a reducer which is suitable for the size of the interconnecting pipes determined according to the table below and cut it with a pipe cutter.

- If the pipe size of ø19.1 or larger is used, the O material may be insufficient to withstand the specified pressure. Therefore, make sure to use the 1/2H material with thickness of 1.0mm or more. When using the O material for the pipe size of ø19.1, a thickness of 1.2 or more is required. In this case, the connection must be brazed.

Cutting procedure

- Use pipe cutter for cutting.
- Cut a joint and reducer in order that their fit depths should be 15mm or more.

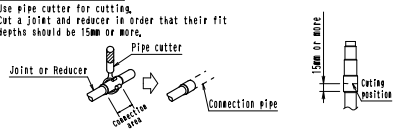

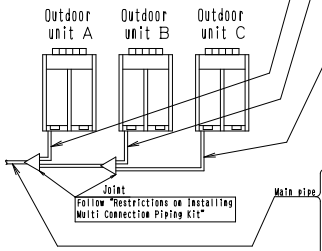

Pipe between the joint and the outdoor unit A (units : mm)

Outdoor unit total capacity type	Pipe size (O.D. x min. thickness [temper grade])		
	Suction gas pipe	HP/LP gas pipe	Liquid pipe
34~48HP	ø28.6×1.0[1/2H]	ø22.2×1.0[1/2H]	ø12.7×0.8[O]

Pipe between the joint 2 and the outdoor unit B (units : mm)

Outdoor unit total capacity type	Pipe size (O.D. x min. thickness [temper grade])		
	Suction gas pipe	HP/LP gas pipe	Liquid pipe
34HP	ø22.2×1.0[1/2H]	ø19.1×1.0[1/2H]	ø 9.5×0.8[O]
36~40HP	ø28.6×1.0[1/2H]		ø12.7×0.8[O]
42~48HP		ø22.2×1.0[1/2H]	

Pipe between the joint 2 and the outdoor unit C (units : mm)

Outdoor unit total capacity type	Pipe size (O.D. x min. thickness [temper grade])		
	Suction gas pipe	HP/LP gas pipe	Liquid pipe
34~38・42HP	ø22.2×1.0[1/2H]	ø19.1×1.0[1/2H]	ø 9.5×0.8[O]
40・44HP	ø28.6×1.0[1/2H]		ø12.7×0.8[O]
46・48HP		ø22.2×1.0[1/2H]	

● Select the pipe size according to the total capacity of outdoor unit. (units : mm)

Outdoor unit total capacity type	Pipe size (O.D. x min. thickness [temper grade])		
	Suction gas pipe	HP/LP gas pipe	Liquid pipe
34HP	ø34.9×1.21[1/2H]	ø28.6×1.0[1/2H]	ø19.1×1.0[1/2H]
36HP	ø41.3×1.43[1/2H]		
38~48HP		ø34.9×1.21[1/2H]	

When reducer is used

- Suction gas-side reducer(4) may be used during the construction on this installition see right figure C for the connection detail.
- Suction gas-side reducer(5) may be used during the construction on this installition see right figure D, E, or F for the connection detail.

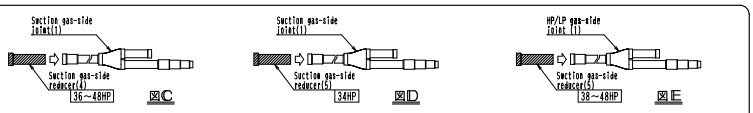

❶ Installation examples — Procedure for Front Connection

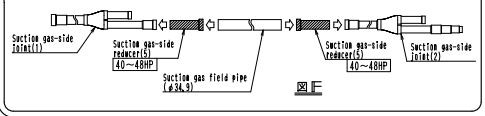

1-1 Exterior view

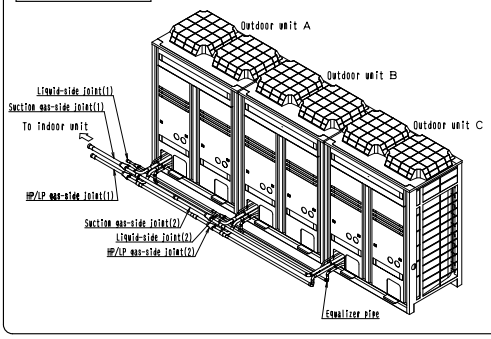

1-2 Finished dimensions

- For installations where the A dimensions exceed 318mm, extend the field supply interconnecting pipe between the joint and the outdoor unit.

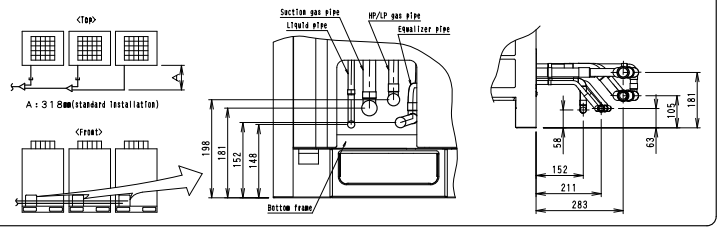

1P206372B

❷ Connection of suction gas-side and HP/LP gas-side pipe

2-1 Cutting the field supply Suction gas-side and HP/LP gas-side pipe

- Cut the Suction gas pipe or HP/LP gas pipe(field supply) according to Table 1, 2.

Caution
- This table shows where A dimension is 318mm by 1-2 finished dimensions, If its installation exceeds 318mm, see table 1 and 2 and adjust Suction gas-side pipe 1, 2, 3 and HP/LP gas-side pipe 1, 2, 3, 4.
- The L dimensions of the suction gas-side pipe 1, 2, 3 in Table 1 and HP/LP gas-side pipe 1, 2, 3, 4 in Table 2 are applied to where B dimensions of elbows are shown as in Table 3 and 4. If B dimension is different from the dimensions in the table, see Table 1 and 2 and adjust them.

■ Table1

Model type	Suction gas pipe 1(field supply) L (mm)	Suction gas pipe 2(field supply) L (mm)	Suction gas pipe 3(field supply) L (mm)
34HP	135	79	256
36・38HP			
40HP		153	252
42HP			256
44~48HP			252

■ Table2

Model type	HP/LP gas pipe 1(field supply) L (mm)	HP/LP gas pipe 2(field supply) L (mm)	HP/LP gas pipe 3(field supply) L (mm)	HP/LP gas pipe 4(field supply) L (mm)
34~40HP	80	67	262	59
42・44HP	80	97	262	59
46・48HP	80	97	256	47

■ Table3

Model type	Elbow 1(field supply) B (mm)
34~38HP	23
40HP	29
42HP	23
44~48HP	29

■ Table4

Model type	Elbow 2(field supply) B (mm)
34~44HP	17
46・48HP	23

2-2 Connection of pipes

- Connect suction gas-side and HP/LP gas-side pipes as following the procedure on the below figure. (For connection of pipes, at first, connect Suction gas-side joint with Suction gas-side reducer (1) and HP/LP gas-side joint with HP/LP gas-side reducers (1) and (2).)
- See 1-2 finished dimensions for the location (height) of the joints.
- See the caution section in the Installation manual attached to the outdoor unit for brazing pipes.
- Install the joints so that an attached face of the caution label keeps horizontally. (See the view G)
- Refer of both Cutting procedure for the cuting position of both joint and reducer.

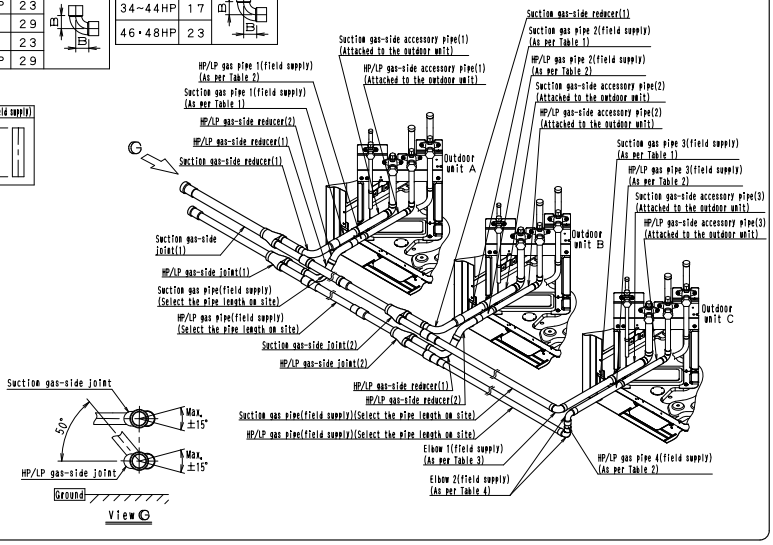

❸ Connection of Liquid-side and equalizer pipe

3-1 Cutting the field supply Liquid-side and equalizer pipe

- Cut the equalizer pipe(field supply) according to Table 1.

Caution
- This table shows the case when the A dimensions shown in 1-2 Finished dimensions is 318mm. If the A dimensions exceed 318mm, see Table 1 and adjust the dimensions of Equalizer pipe 1 and 2.
- The L dimensions of Equalizer pipe 1 and 2 in Table 1 show those when the field supply elbows have B dimension in Table 2. If the B dimension is not same with Table 2, see Table 1 and adjust them accordingly.

3-2 Connection of pipes

- Connect liquid-side and equalizer pipes as following the procedure on right figure. (For connection of pipes, at first, connect Liquid-side joint with Liquid-side reducer (1).)
- See 1-2 finished dimensions for the location (height) of the joints.
- See the caution section in the Installation manual attached to the outdoor unit for brazing pipes.
- Connect Liquid-side reducer (1) as at about 40° inclination and bend the field supplied liquid pipe up to the stop valve as following the procedure on right figure.
- If the liquid-side reducer is connected with liquid-side pipes not bent vertically, the insulation will not be fitted.
- Refer of both Cutting procedure for the cuting position of both joint and reducer.

Caution
- If the liquid side reducer is connected horizontally without bending the liquid pipes, the insulation will not fit.

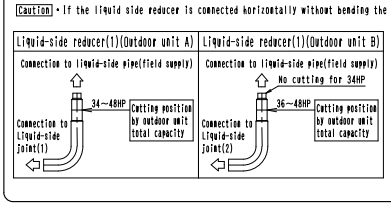

■ Table1

Equalizer pipe 1(field supply) L (mm)	Equalizer pipe 2(field supply) L (mm)
95	60

■ Table2

Elbow(field supply) B (mm)
17

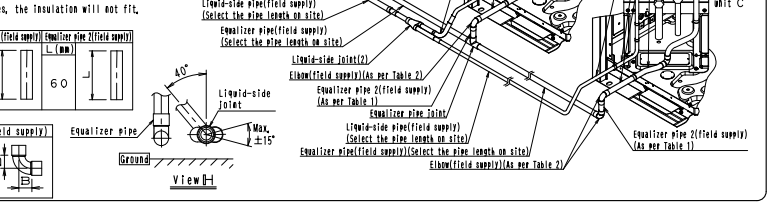

❹ The work after the kit is connected

Connection of piping between the outdoor unit and the indoor unit
Air tight test
Insulation of joints

} Follow the instructions in the installation manual included with the outdoor unit, when performing installation work.

(1) Fit the insulating tube to the reducer and temporarily keep it in place with tape.
(2) Fit the insulation to the joint and temporarily keep it in place with tape without leaving a gap between the insulation mating faces. (See the figure at the right.)
(3) Seal the seam between the insulation and the field supply piping insulation with the field supply tape.
(4) Wrap the tape around the insulation attached to the joint without leaving a gap. (▨ section shown in the figure at the right.)

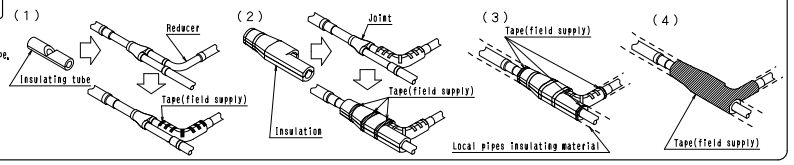

❶ Installation examples Procedure for Lower Front Connection

1-1 Exterior view

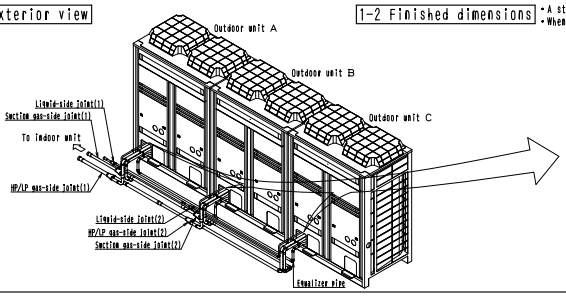

1-2 Finished dimensions

- A standard installation has the following dimensions.
- When the dimensions exceed the standard installation, extend the pipes between the outdoor unit and the joint(field supply).

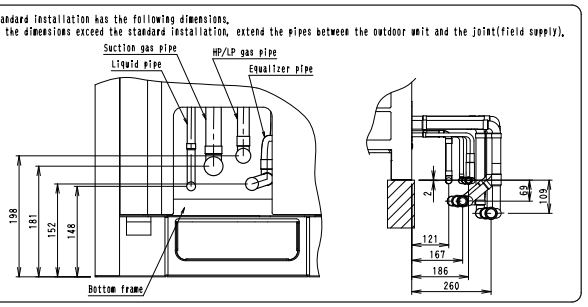

continue to reverse side

1P206372B

❷ Connection of suction gas-side and HP/LP gas-side pipe

2-1 Cutting the field supply Suction gas-side and HP/LP gas-side pipe

- Cut the according to Table 1, 2.

Caution
- The L dimensions of Suction gas pipe 1-6 in Table 1 and HP/LP gas pipe 1-7 in Table 2 are applied to where B dimensions of elbows are shown as in Table 3, 4. If B dimension is different from the dimensions in the table, see Table 1 and 2 and adjust them.

■ Table1

Model type	Suction gas pipe 1(field supply) L (mm)	Suction gas pipe 2(field supply) L (mm)	Suction gas pipe 3(field supply) L (mm)	Suction gas pipe 4(field supply) L (mm)	Suction gas pipe 5(field supply) L (mm)	Suction gas pipe 6(field supply) L (mm)
34HP	212	199	164	168	102	244
36・38HP						
40HP		195	160		168	232
42HP			164			244
44~48HP			160			232

■ Table2

Model type	HP/LP gas pipe 1(field supply) L (mm)	HP/LP gas pipe 2(field supply) L (mm)	HP/LP gas pipe 3(field supply) L (mm)	HP/LP gas pipe 4(field supply) L (mm)	HP/LP gas pipe 5(field supply) L (mm)	HP/LP gas pipe 6(field supply) L (mm)	HP/LP gas pipe 7(field supply) L (mm)
34~40HP	217	206	176	97	73	233	64
42・44HP	217	200	176	97	97	233	64
46・48HP	217	200	170	97	97	221	52

■ Table3

Model type	Elbow 1(field supply) B (mm)	Elbow 2(field supply) B (mm)	Elbow 3(field supply) B (mm)
34HP	29	23	23
36・38HP			
40HP		29	29
42HP			23
44~48HP			29

■ Table4

Model type	Elbow 4(field supply) B (mm)	Elbow 5(field supply) B (mm)	Elbow 6(field supply) B (mm)
34~40HP	23	17	17
42・44HP		23	
46・48HP			23

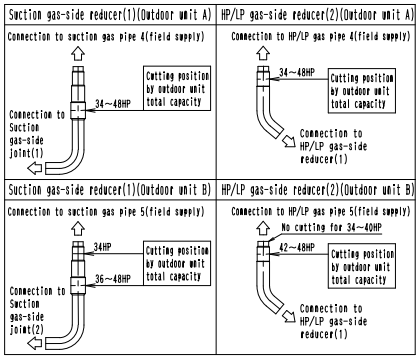

2-2 Connection of pipes

- Connect suction gas-side and HP/LP gas-side pipes as following the procedure on the right figure. (For connection of pipes, at first, connect Suction gas-side joint with Suction gas-side reducer (1) and HP/LP gas-side joint with HP/LP gas-side reducers (1) and (2).)
- See the caution section in the installation manual attached to the outdoor unit for brazing pipes.
- Install the joints so that an attached face of the caution label keeps horizontally. (See the view J)
- Refer of both Cutting procedure for the cuting position of both joint and reducer.

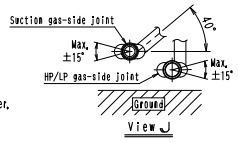

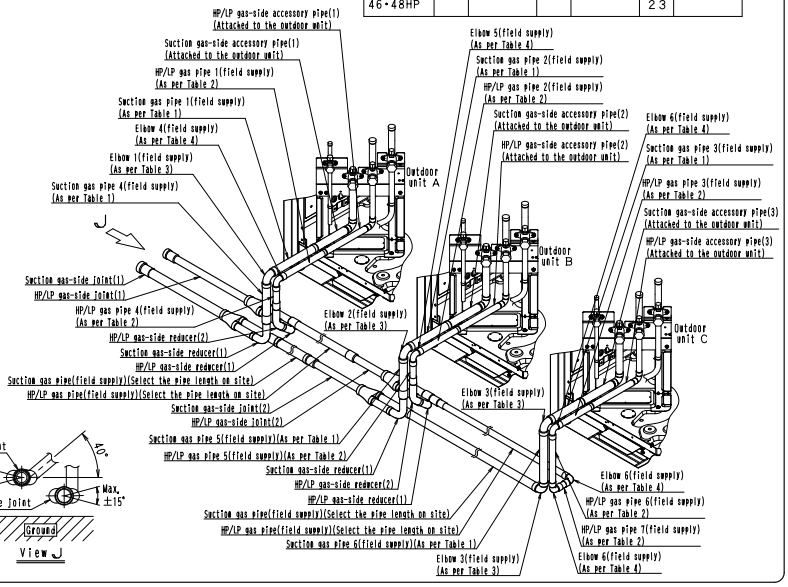

❸ Connection of Liquid-side and equalizer pipe

3-1 Cutting the field supply Liquid-side and equalizer pipe

- Cut the equalizer pipe(field supply) according to Table 1.

Caution
- This table shows where A dimension is 318mm by 1-2 finished dimensions. If its installation exceeds 318mm, see Table 1 and adjust Equalizer pipe 1 and 2.
- The L dimensions of Equalizer pipe 1 and 2 in Table 1 are applied to where elbows are the B dimension in Table 2 on "procedure for front connection" and " connection of Liquid-side and equalizer pipe." If B dimension is different from the dimensions in the table, see Table 1 and adjust them.

3-2 Connection of pipes

- Connect liquid-side and equalizer pipes as following the procedure on the right figure. (For the connection, at the first, connect Liquid-side joint with Liquid-side reducer (1).)
- See 1-2 finished dimensions for the location (height) of the joints.
- See the caution section in the installation manual attached to the outdoor unit for brazing pipes.
- Install the joints so that an attached face of the caution label keeps horizontally. (See the view K)
- Connect Liquid-side reducer(1) as at about 90° inclination and bend the field supplied liquid pipe up to the stop valve as following the procedure on right figure. (See the view K)
- Refer of both Cutting procedure for the cuting position of both joint and reducer.

Caution
- If the liquid side reducer is connected vertically without bending the liquid pipes, the insulation will not fit.

■ Table 1

Equalizer pipe 1(field supply) L (mm)	Equalizer pipe 2(field supply) L (mm)
65	120

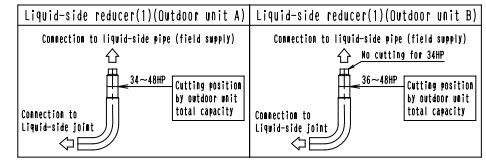

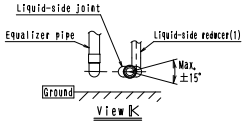

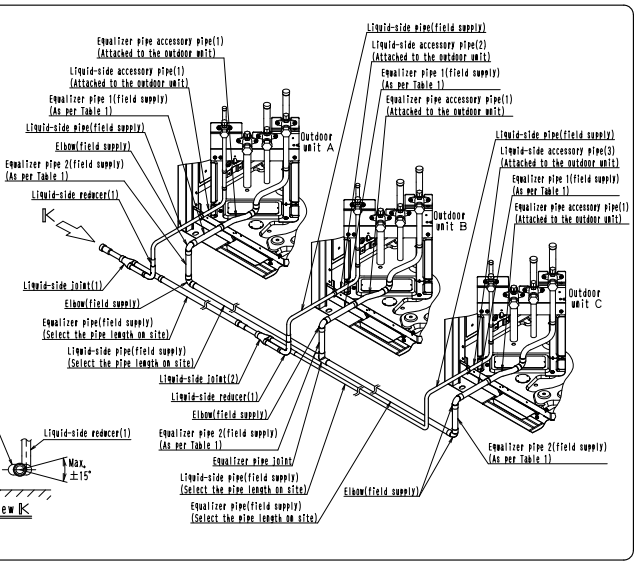

❹ The work after the kit is connected

Connection of piping between the outdoor unit and the indoor unit

Air tight test

Follow the instructions in the installation manual included with the outdoor unit, when performing installation work.

Insulation of joints

(1) Fit the insulating tube to the reducer and temporarily keep it in place with tape.
(2) Cut insulating tube along the slit. (See the figure at the right.)
Fit the insulation to the joint and temporarily keep it in place with tape without leaving a gap between the insulation mating faces.
(3) Seal the seam between the insulation and the field supply piping insulation with the field supply tape.
(4) Wrap the tape around the insulation attached to the joint without leaving a gap. (▨ section shown in the figure at the right.)

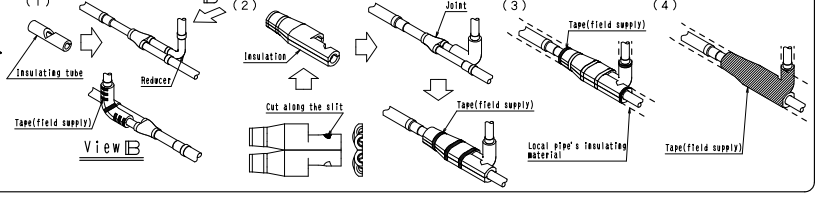

1P206373B

❶ Installation examples — Procedure for Bottom Connection

⚠Caution This installation is only possible if there is enough space to perform brazing and racking underneath the outdoor unit. If a centralized vibration proof base are used, the dimensions marked with "✻" in the figure below will vary, so see the table below and determine the length of the field pipes.

1-1 Exterior view

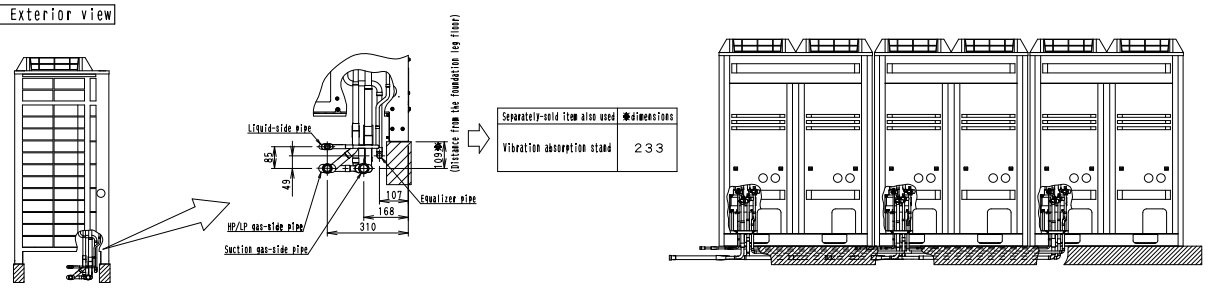

Separately-sold item also used	✻dimensions
Vibration absorption stand	233

❷ Connection of suction gas-side and HP/LP gas-side pipe

2-1 Cutting the field supply suction gas-side pipe and HP/LP gas-side pipe and the suction gas-side accessory pipe(2) attached to the outdoor unit

- Cut the pipes according to Table 1 or 2.

Caution • The "L" dimensiones of the suction gas pipe 1 in Table 1 and the HP/LP gas pipe 1~3 in Table 2 are identical to the "B" dimensions in Table 3 and Table 4 those of "field supply elbows" shown in the procedure of front connection, which are equivalent to "straight size joint" with stopper. If the "B" dimentions are not identical to Table 3 and Table 4 or "straight size joint" is without stopper, adjust them as Table 1 and 2 show.

■ Table 1 (For Outdoor unit C Side)

Model type	Suction gas-side accessory pipe(3) (Attached to the outdoor unit) L (mm)	Suction gas pipe 1(field supply) L (mm)
34~38HP	0 (no cutting)	137
40~46HP		102
48HP	41	98

■ Table2

Model type	HP/LP gas pipe 1(field supply) L (mm)	HP/LP gas pipe 2(field supply) L (mm)	HP/LP gas pipe 3(field supply) L (mm)
34~44HP	155	86	94
46・48HP	119	110	82

2-2 Connection of pipes

- Remove the knockout plate on the bottom frame. (See the installation manual attached to the outdoor unit)
- Connect the suction gas-side and HP/LP gas-side pipes as shown in the figure below. (When connecting the pipes, first connect Suction gas-side joint and the suction gas-side reducer(1), the HP/LP gas-side joint and the HP/LP gas-side reducer (1)(2))
- See the caution section in the installation manual attached to the outdoor unit for brazing pipes.
- Install the joint so that an attached face of the caution label keeps horizontal. (See the view L)
- Connect the HP/LP gas-side reducer(1) as at about. 50° inclination and connect HP/LP gas-side reducer(2)(See the view L)
- Refer of both Cutting procedure for the cuting position of both joint and reducer.

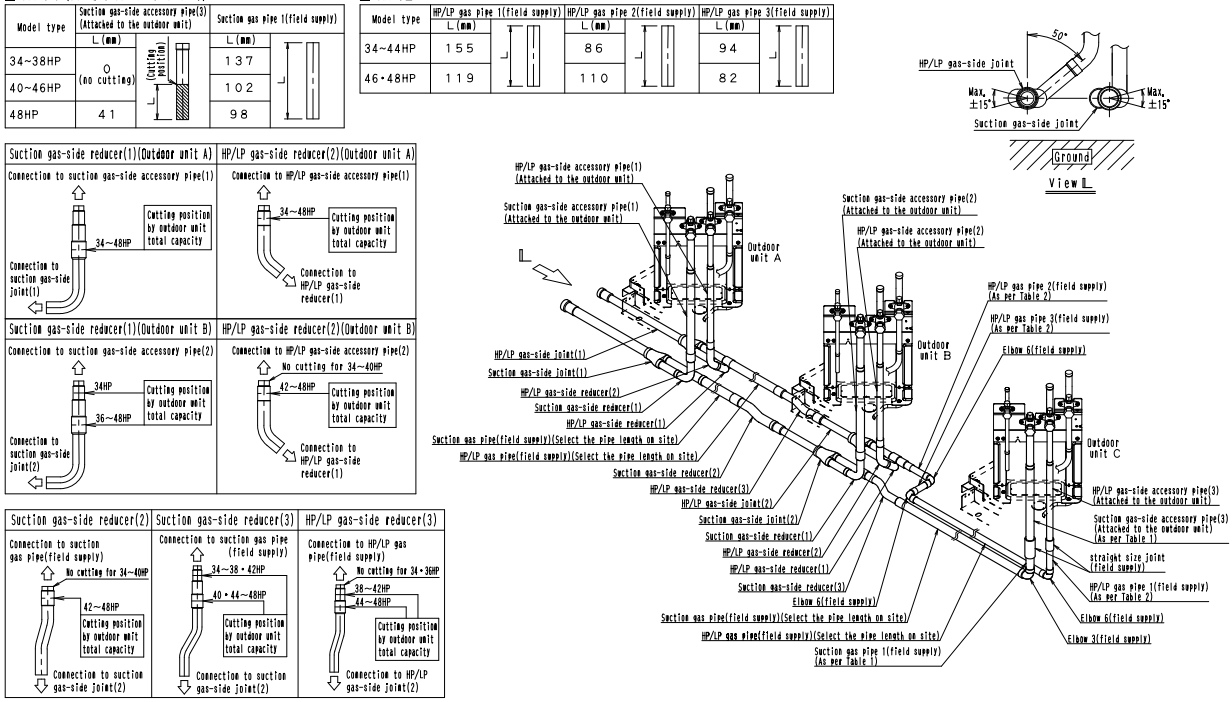

❸ Connection of Liquid-side and equalizer pipe

3-1 Connection of pipes

- Remove the knockout plate on the bottom frame. (See the installation manual attached to the outdoor unit)
- Connect the liquid side and equalizer pipe as shown in the figure right. (When connecting the pipes, first connect Liquid-side joint and Liquid-side reducer (1))
- See the caution section in the installation manual attached to the outdoor unit for brazing pipes.
- Install the joint in such a way that the attached face of the caution label becomes horizontal. (See the view M)
- Bend the field supplied liquid pipe up to the stop valve as shown in the right figure. (See the view M)
- Refer of both Cutting procedure for the cuting position of both joint and reducer.

Caution • If the liquid side reducer is connected vertically without bending the liquid pipes, the insulation will not fit.

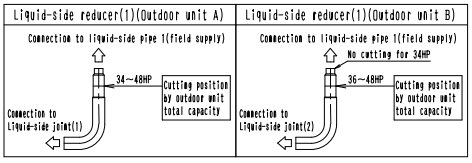

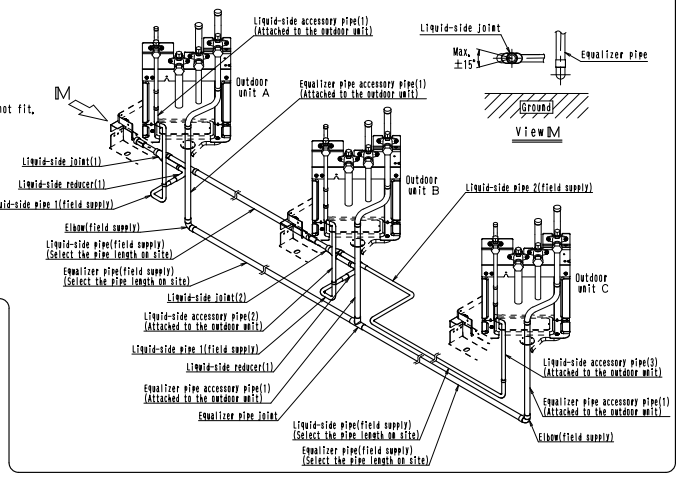

❹ The work after the kit is connected

Connection of piping between the outdoor unit and the indoor unit
Air tight test
Insulation of joints

} Follow the instructions in the installation manual included with the outdoor unit, when performing installation work.

- See "The work after the kit is connected" for a Lower front connection."

1P206373B

5.4 BHFP22MA56 / 84, BHFP26MA56 / 84

BHFP22MA56 / BHFP26MA56 Unit (mm)

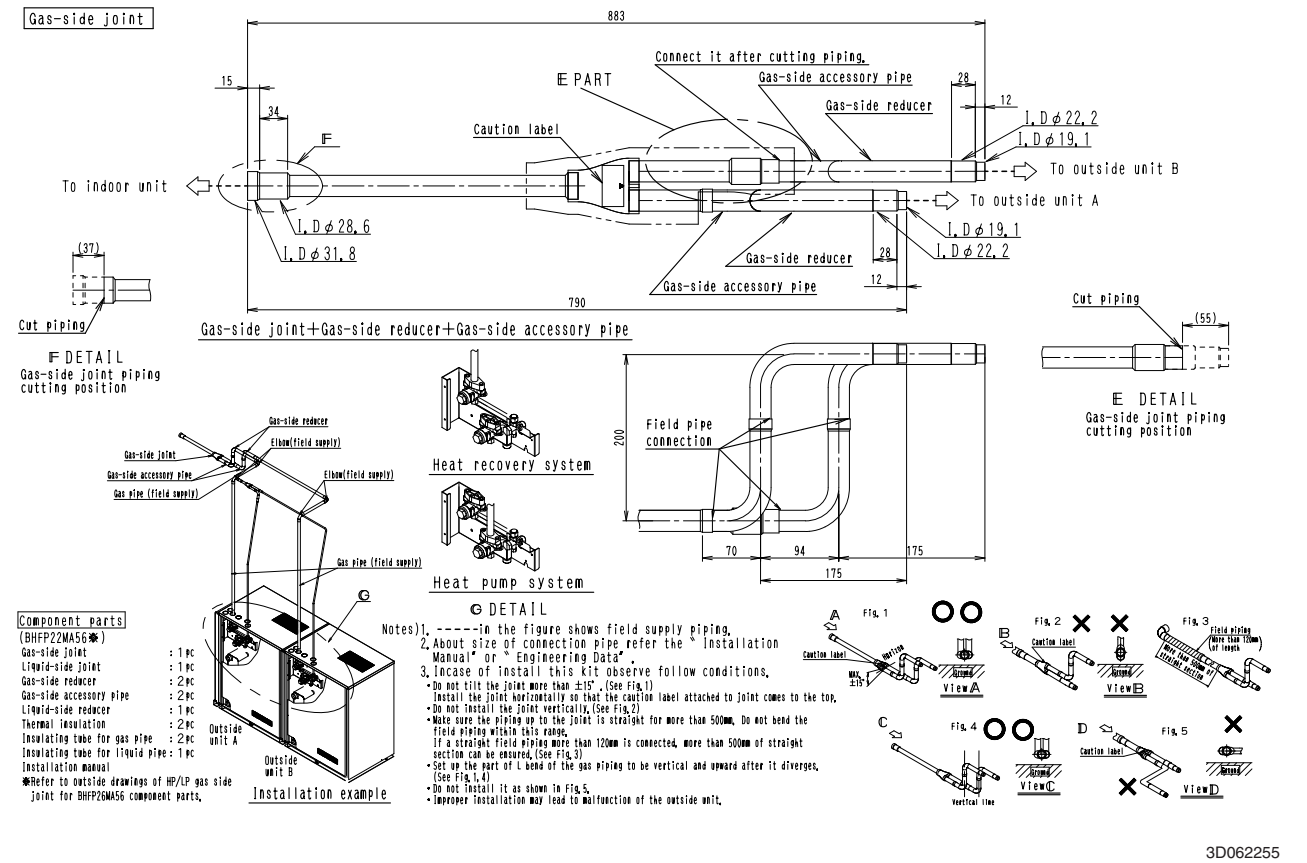

3D062255

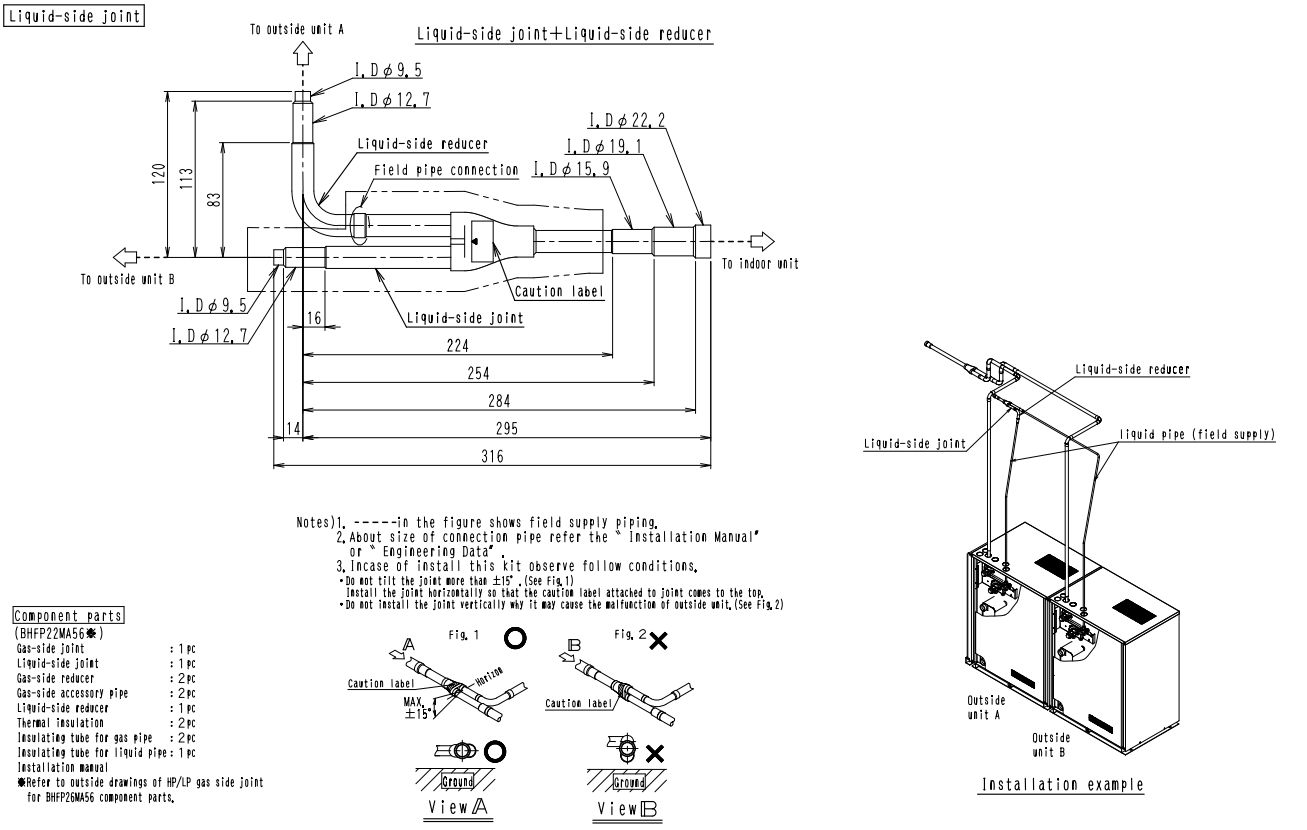

3D062254

BHFP22MA84 / BHFP26MA84

Unit (mm)

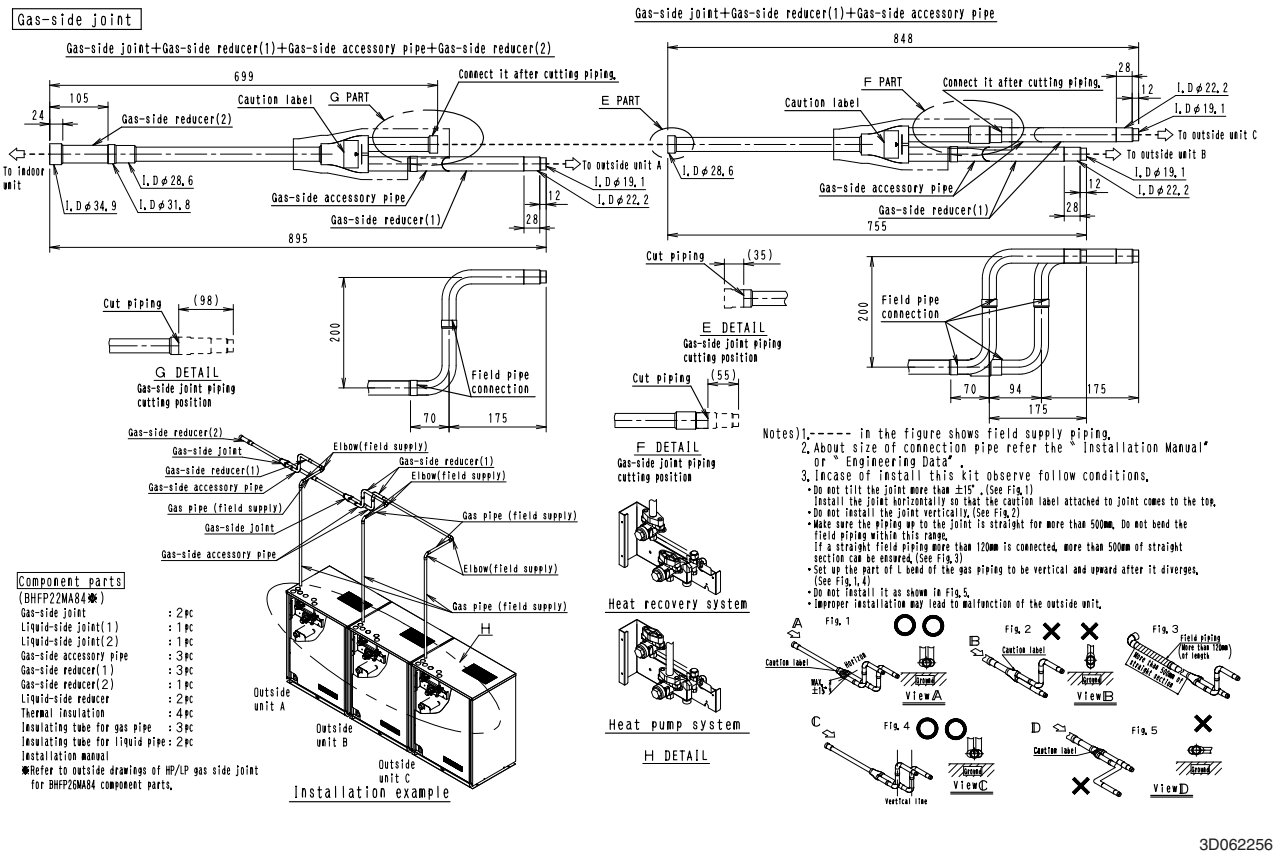

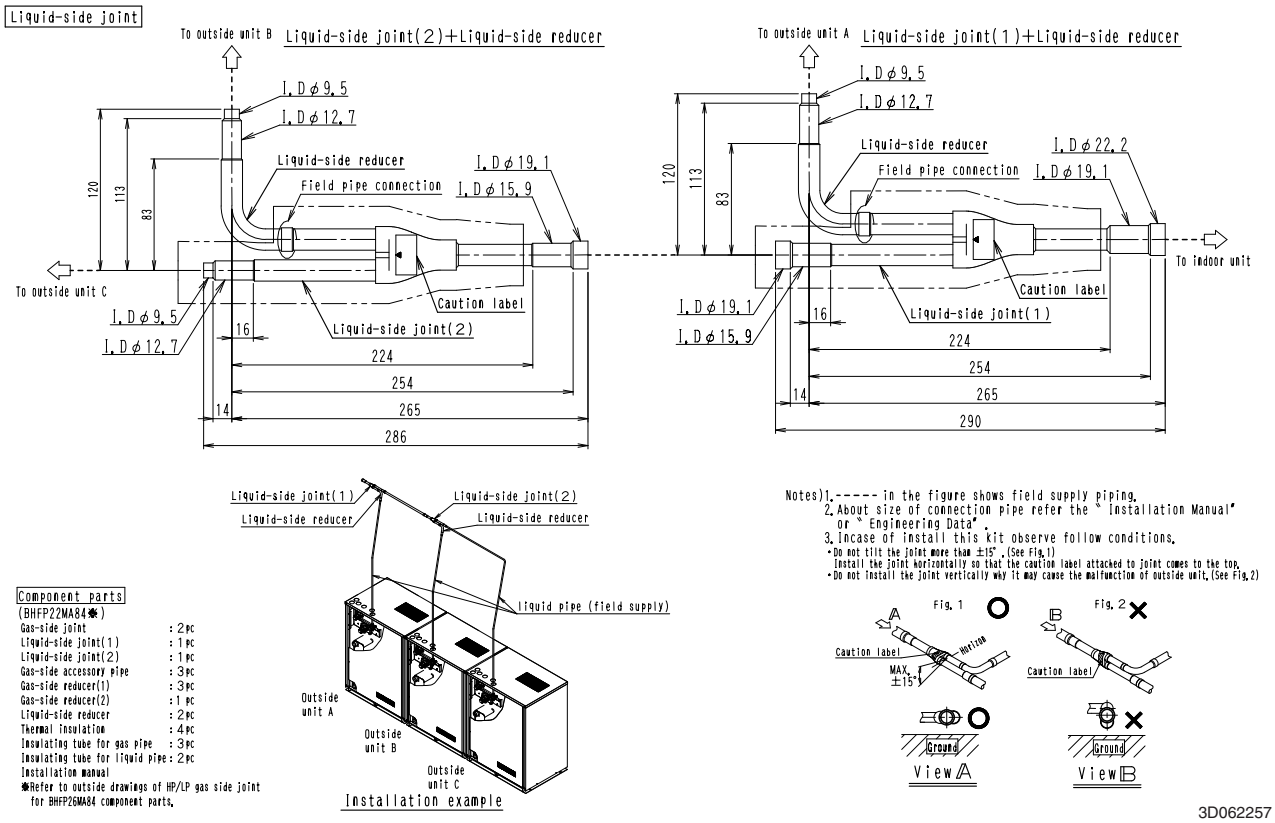

BHFP26MA56

Unit (mm)

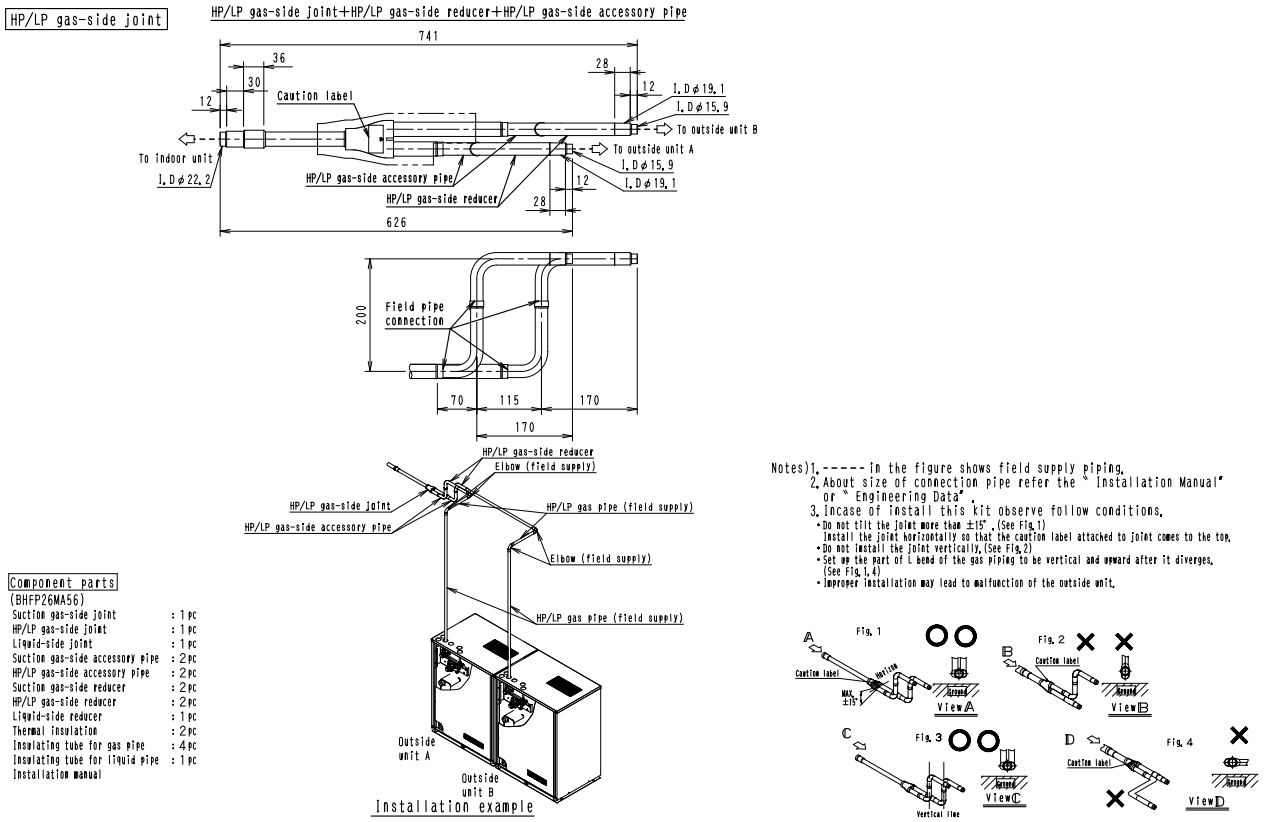

BHFP26MA84

Unit (mm)

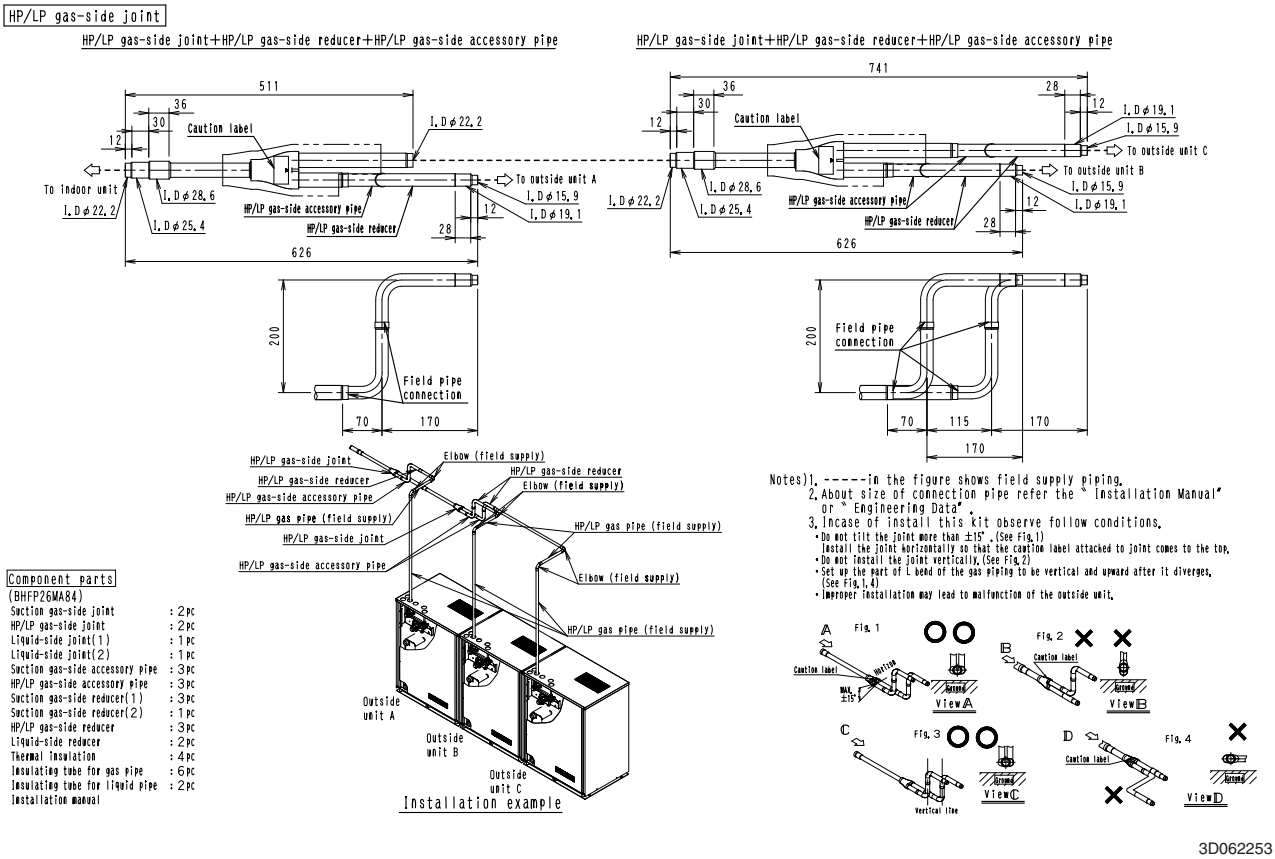

Installation Manual

BHFP22MA56 / BHFP22MA84

VRV-W Series Please be sure to read before installation and follow the instructions carefully when performing installation works. 1P236136-1

Outside unit Multi Connection Piping Kit Installation Manual BHFP22MA56・84

Component parts ■This kit contains the follwing parts. <Do not throw away any of the accessories until installation is complete.>

Kit name	Gas-side joint	Liquid-side joint	Gas-side reducer	Gas-side accessory pipe	Liquid-side reducer	Insulating tube for gas pipe	Insulating tube for liquid pipe
BHFP22P56	1pc	1pc	2pc	2pc	1pc	2pc	1pc
BHFP22P84	2pc	(1) 1pc (2) 1pc	(1) 3pc (2) 1pc	3pc	2pc	3pc	2pc

Notes
- Please be sure to read this manual before installation and follow the instructions carefully when performing installation works.
- See the attached installation manual for the installation of outside unit.
- For installation of interconnecting pipes between the outside and indoor units, REFNET joint or REFNET header will be needed.

(units : mm)

Temper grade	O Type				1/2H Type				
Copper tube O.D.	φ6.4	φ9.5	φ12.7	φ15.9	φ19.1	φ22.2	φ25.4	φ28.6	φ31.8	φ34.9
Copper tube W.T (Minimum requirement)	0.80	0.80	0.80	0.99	0.80	0.80	0.88	0.99	1.10	1.21

Selection Procedure

Number of outside units connected	2 units	3 units
Outside unit Multi Connection Piping Kit	BHFP22MA56	BHFP22MA84

- 2 or 3 outside units can be connected.
- There are restrictions on the combination of outside units, so please refer to the Engineering Data for details.

Field supply parts ■The following parts are needed to connect this kit and are not included.

Field supply parts

Name	Q'ty	Selection Procedure
Insulation for piping Connection piping	1set	See the "Connecting Pipe Sizes and location of cutting the joint" for details on the necessary size.
Elbow		Prepare a gas pipe diameter for the upper outside unit as listed in "Connecting Pipe Sizes and location of cutting the joint."
	4pc	BHFP22MA56
	6pc	BHFP22MA84
Tape	1set	For insulation materials

Notes
- Quantities and selection procedure of elbows are only applicable upper connections. (see the right page)
- The quantities and selection procedure shall be changed according to refrigerant piping.
- The min. thickness of the pipes in this manual shows the requirements of Japanese High Pressure Gas Control law. (As of Jan. 2003) And the temper grade (O, 1/2H) shows the material type of JIS H 3300. The thickness and material shall be selected in accordance with local code for the design pressure 4.0MPa(40bar).

Installation examples
- The figure at the right shows a typical connection. Make sure to follow the installation restrictions and carry out installation taking the field requirements into consideration.

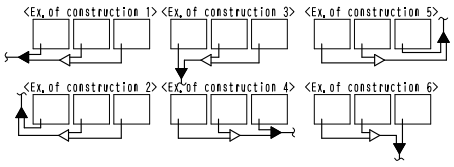

To the piping installer When installing this kit, please apply the following restrictions.

Restrictions on installing multi connection piping kit
- Do not tilt the joint more than ±15°. (See Fig. 1) Install the joint horizontally so that the caution label attached to joint comes to the top.
- Do not install the joint vertically. (See Fig. 2)
- Make sure the piping up to the joint is straight for more than 500mm. Do not bend the field piping within this range. If a straight field piping more than 120mm is connected, more than 500mm of straight section can be ensured. (See Fig. 3)
- Set up the part of L bend of the gas piping to be vertical and upward after it diverges. (See Fig. 1, 4)
- Do not install it as shown in Fig. 5.
- Improper installation may lead to malfunction of the outside unit.

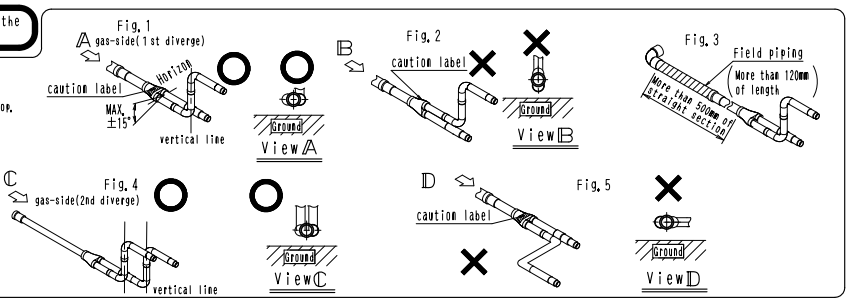

Restrictions on piping between outside units

1. Piping between outside units be located either in level or up-graded in order to prevent oil from being collected in the pipe.

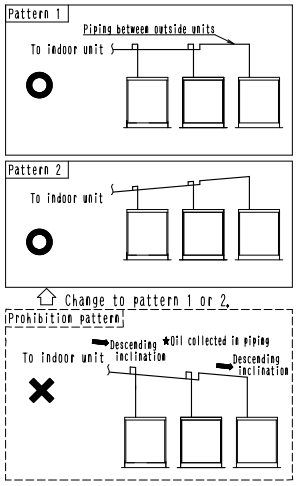

2. Make traps of 200mm or more after take-off of the gas pipe by using accessory pipe in this kit. Collected refrigerant may cause the outside unit breakdown.

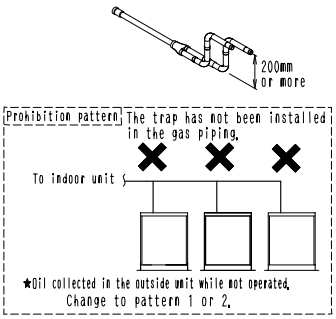

3. If the distance between outside unit connection piping kits exceeds 2m, 200mm or more of a riser is required within 2m from the kit only on the gas side.

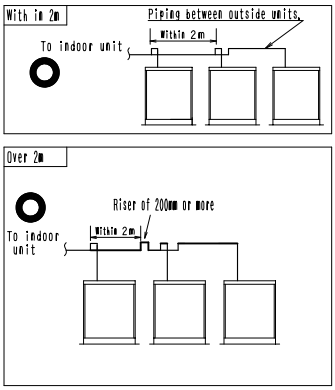

BHFP22MA56 Installation Instructions

Caution There are some restrictions on the interconnecting pipes between the outside units. See the installation manual attached to the outside units and make sure to carry out proper piping. If the piping restrictions are not observed, it may result in breakdown of the unit.

Connecting pipe sizes and location of cutting the joint Select either a joint or a reducer which is suitable for the size of the interconnecting pipes determined according to the table below and cut it with a pipe cutter.

Main pipe
- Select according to system capacity of the outside unit.

(units : mm)

System capacity of outside unit	Pipe size (outer diameter X Min thickness)	
	Gas pipe	Liquid pipe
RWEYQ16 type	φ28.6X0.99	φ12.7X0.80
RWEYQ18, 20 type		φ15.9X0.99

Pipe between the kit and the outside unit
- Select according to capacity of each unit. (units : mm)

Capacity type of outside unit	Pipe size (outer diameter X Min thickness)	
	Gas pipe	Liquid pipe
RWEYQ8 type	φ19.1X0.80	φ9.5X0.80
RWEYQ10 type	φ22.2X0.80	

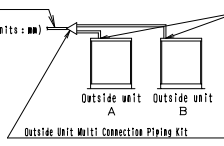

Cutting procedure
- Use pipe cutter for cutting.

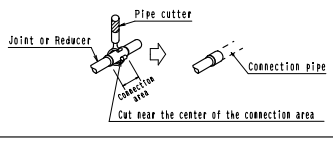

1P236136

❶ Installation examples — Procedure for upper connection

1 — 1 Connection of gas and liquid pipes

Plese be sure to read Restrictions on installing multi connection piping kit and Restriction on piping between outside units.

- Connect the gas and liquid pipes as shown on the right figure. (When connecting the pipes, first connect the gas-side accessory pipe and the gas-side reducer to the gas-side joint, and the liquid-side reducer to the liquid-side joint.)
- See the caution section in the installation manual attached to the outside unit for brazing pipes.
- When mounting the joints, place them horizontal to the ground by facing the caution label (See View A).

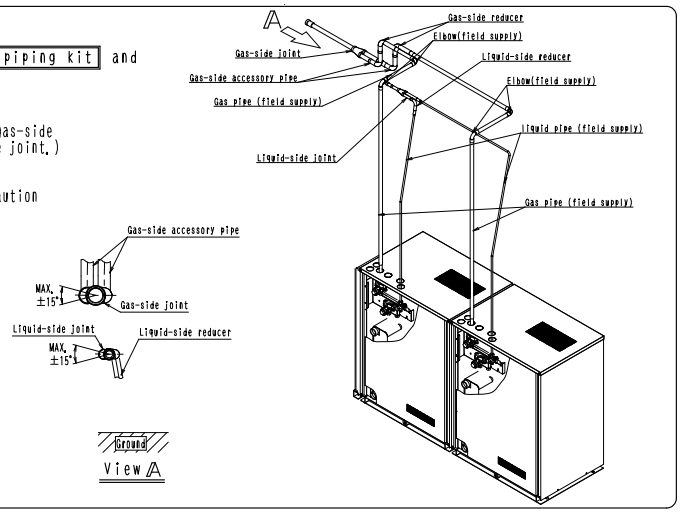

❷ The work after the kit is connected

Connection of piping between the outside unit and the indoor unit

Air tight test

Insulation of joints

(1) Fit the insulation on the reducer and temporarily keep it in place with tape.
(2) • Cut -off the slit on insulation to match direction of the reducer.
• Fit the insulation on the joint and temporally keep it in place with tape (field supply) without any gap between the insulation. (See the right figure)
(3) Seal between the insulation and the field supply pipes with the tape.
(4) Wrap the tape around the insulation attached to the joint without leaving any gap.
(▨ part on the right figure(4))

Follow the instructions on installation manual included with the outside unit, when performing installation works.

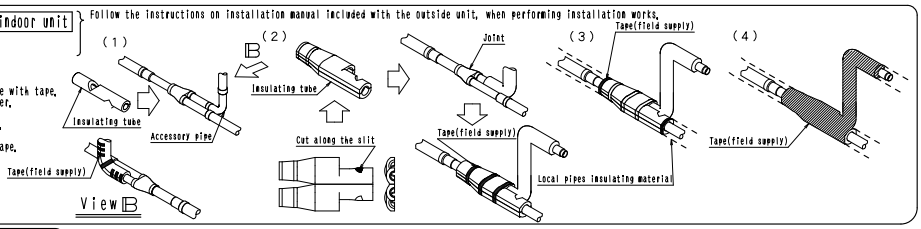

BHFP22MA84 Installation Instructions

⚠Caution There are some restrictions on the interconnecting pipes between the outside units. See the installation manual attached to the outside units and make sure to carry out proper piping. If the piping restrictions are not observed, it may result in breakdown of the unit.

Connecting pipe sizes and location of cutting the joint

Select either a joint or a reducer which is suitable for the size of the interconnecting pipes determined according to the table below and cut it with a pipe cutter.

Main pipe

• Select according to system capacity of the outside unit.

(units : mm)

System capacity of outside unit	Pipe size (outer diameter X Min thickness)	
	Gas pipe	Liquid pipe
RWEYQ24 type	ϕ34.9×1.21	ϕ15.9×0.99
RWEYQ26-30 type		ϕ19.1×0.80

Pipe between the kits

• Select according to total capacity of the combination of units.

(units : mm)

Total capacity of outside unit	Pipe size (outer diameter X Min thickness)	
	Gas pipe	Liquid pipe
16HP	ϕ28.6×0.99	ϕ12.7×0.80
18, 20HP		ϕ15.9×0.99

(units : mm)

Capacity type of outside unit	Pipe size (outer diameter X Min thickness)	
	Gas pipe	Liquid pipe
RWEYQ8 type	ϕ19.1×0.80	ϕ9.5×0.80
RWEYQ10 type	ϕ22.2×0.80	

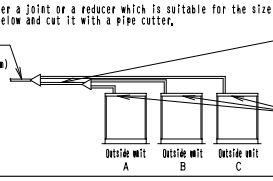

Cutting procedure

• Use pipe cutter for cutting.

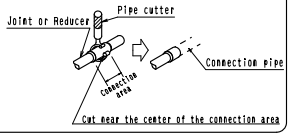

❶ Installation examples — Procedure for upper connection

1 — 1 Connection of gas and liquid pipes

Plese be sure to read Restrictions on installing multi connection piping kit and Restriction on piping between outside units.

- Connect the gas and liquid pipes as shown on the right figure. (When connecting the pipes, first connect the gas-side accessory pipe and the gas-side reducer to the gas-side joint, and the liquid-side reducer to the liquid-side joint.)
- See the caution section in the installation manual attached to the outside unit for brazing pipes.
- When mounting the joints, place them horizontal to the ground by facing the caution label (See View A).

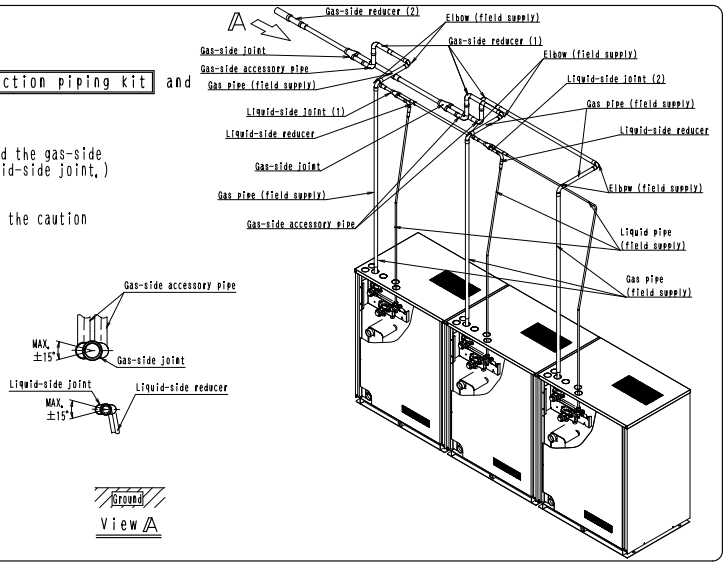

❷ The work after the kit is connected

Connection of piping between the outside unit and the indoor unit

Air tight test

Insulation of joints

(1) Fit the insulation on the reducer and temporarily keep it in place with tape.
(2) • Cut -off the slit on insulation to match direction of the reducer.
• Fit the insulation on the joint and temporally keep it in place with tape (field supply) without any gap between the insulation. (See the right figure)
(3) Seal between the insulation and the field supply pipes with the tape.
(4) Wrap the tape around the insulation attached to the joint without leaving any gap.
(▨ part on the right figure(4))

Follow the instructions on installation manual included with the outside unit, when performing installation works.

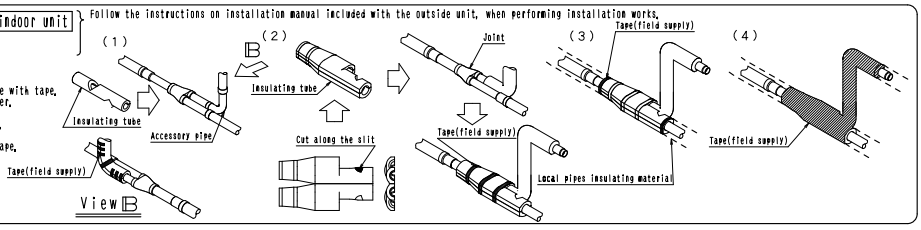

1P236136

BHFP26MA56 / BHFP26MA84

VRV-W Series Please be sure to read before installation and follow the instructions carefully when performing installation works. 1P236135-1

Outside unit Multi Connection Piping Kit Installation Manual BHFP26MA56・84

Component parts

■This kit contains the follwing parts.

<Before Installation>
- This kit is a common opptional accessory for VRV-W Series in general. When connecting to VRV-WII Series (RWEYQ-M type), replace the (✱) marked word "HP/LP gas" with "Discharge gas".
- Do not throw away any of the accessories until installation is complete.

Kit name	Suction gas-side joint	HP/LP gas-side joint(✱)	Liquid-side joint	Suction gas-side reducer	Suction gas-side accessory pipe	HP/LP gas-side reducer(✱)	HP/LP gas-side accessory pipe(✱)	Liquid-side reducer	Insulating tube for gas pipe	Insulating tube for liquid pipe
BHFP26MA56	1pc	1pc	1pc	2pc	2pc	2pc	2pc	1pc	4pc	1pc
BHFP26MA84	2pc	2pc	(1) 1pc (2) 1pc	(1) 3pc (2) 1pc	3pc	3pc	3pc	2pc	6pc	2pc

Selection Procedure

Number of outside units connected	2 units	3 units
Outside unit Multi Connection Piping Kit	BHFP26MA56	BHFP26MA84

- 2 or 3 outside units can be connected.
- There are restrictions on the combination of outside units, so please refer to the Engineering Data for details.

(units : mm)

Temper grade	O Type				1/2H Type					
Copper tube O.D.	ø6.4	ø9.5	ø12.7	ø15.9	ø19.1	ø22.2	ø25.4	ø28.6	ø31.8	ø34.9
Copper tube t (Minimum retelement)	0.80	0.80	0.80	0.99	0.80	0.80	0.88	0.99	1.10	1.21

Field supply parts

■The following parts are needed to connect this kit and are not included.

Field supply parts		
Name	Q'ty	Selection Procedure
Insulation for pipes / Connection piping	1set	See the "Connecting Pipe Sizes and location of cutting the joint " for details on the necessary size.
Elbow		Prepare a gas pipe diameter for the upper outside unit as listed in "Connecting Pipe Sizes and location of cutting the joint."
	4pc	BHFP26MA56
	6pc	BHFP26MA84
Tape	1set	For insulation materials

Notes
- Quantities and selection procedure of elbows are only applicable upper connections. (see the right page)
- The quantities and selection procedure shall be changed according to refrigerant piping.
- The min. thickness of the pipes in this manual shows the requirements of Japanese High Pressure Gas Control low. (As of Jan. 2003) And the temper grade (O, 1/2H) shows the material type of JIS H 3300. The thickness and material shall be selected in accordance with local code for the design pressure 4.0MPa(40bar).

Notes
- Please be sure to read this manual before installation and follow the instructions carefully when performing installation works.
- See the attached installation manual for the installation of outside unit.
- For installation of interconnecting pipes between the outside and indoor units, REFNET joint or REFNET header will be needed.

Installation examples

- The figure at the right shows a typical connection. Make sure to follow the installation restrictions and carry out installation taking the field requirements into consideration.

<Ex. of construction 1> <Ex. of construction 2> <Ex. of construction 3> <Ex. of construction 4> <Ex. of construction 5> <Ex. of construction 6>

⚠To the piping installer When installing this kit, please apply the following restrictions.

Restrictions on installing multi connection piping kit

- Do not tilt the joint more than ±15°. (See Fig. 1) Install the joint horizontally so that the caution label attached to joint comes to the top.
- Do not install the joint vertically. (See Fig. 2)
- Make sure the piping up to the joint is straight for more than 500mm. Do not bend the field piping within this range. If a straight field piping more than 120mm is connected, more than 500mm of straight section can be ensured. (See Fig. 3)
- Set up the part of L bend of the gas piping to be vertical and upward after it diverges. (See Fig. 1, 4)
- Do not install it as shown in Fig. 5.
- Improper installation may lead to malfunction of the outside unit.

Fig. 1 (A gas-side(1st diverge)): caution label, Horizon, MAX. ±15°, vertical line, View A (Ground)
Fig. 2 (B): caution label, View B (Ground)
Fig. 3: Field piping, More than 120mm of length, More than 500mm of straight section
Fig. 4 (C gas-side(2nd diverge)): vertical line, View C (Ground)
Fig. 5 (D): caution label, View D (Ground)

Restrictions on piping between outside units

1. Piping between outside units be located either in level or up-graded in order to prevent oil from being collected in the pipe.

Pattern 1 — Piping between outside units — To indoor unit ○

Pattern 2 — To indoor unit ○

⇧ Change to pattern 1 or 2.

Prohibition pattern — To indoor unit ✕ — Descending inclination — ★Oil collected in piping. — Descending inclination

2. Make traps of 200mm or more after take-off of the gas pipe by using accessory pipe in this kit. Collected refrigerant may cause the outside unit breakdown.

200mm or more

Prohibition pattern — The trap has not been installed in the gas piping. — To indoor unit ✕ ✕ ✕ — ★Oil collected in the outside unit while not operated. Change to pattern 1 or 2.

3. If the distance between outside unit connection piping kits exceeds 2m, 200mm or more of a riser is required within 2m from the kit only on the gas side.

With in 2m — Piping between outside units. — Within 2m — To indoor unit ○

Over 2m — Riser of 200mm or more — Within 2m — To indoor unit ○

BHFP26MA56 Installation Instructions

⚠Caution There are some restrictions on the interconnecting pipes between the outside units. See the installation manual attached to the outside units and make sure to carry out proper piping. If the piping restrictions are not observed, it may result in breakdown of the unit.

Connecting pipe sizes and location of cutting the joint

Select either a joint or a reducer which is suitable for the size of the interconnecting pipes determined according to the table below and cut it with a pipe cutter.

Main pipe
- Select according to system capacity of the outside unit. (units : mm)

System capacity of outside unit	Pipe size (outer diameter X Min thickness)		
	Suction gas pipe	HP/LP gas pipe(✱)	Liquid pipe
RWEYQ16 type	ø28.6X0.99	ø22.2X0.80	ø12.7X0.80
RWEYQ18, 20 type			ø15.9X0.99

Pipe between the kit and the outside unit
- Select according to capacity of each unit. (units : mm)

Capacity type of outside unit	Pipe size (outer diameter X Min thickness)		
	Suction gas pipe	HP/LP gas pipe(✱)	Liquid pipe
RWEYQ8 type	ø19.1X0.80	ø15.9X0.99	ø9.5X0.80
RWEYQ10 type	ø22.2X0.80	ø19.1X0.80	

Outside unit A — Outside unit B — Outside Unit Multi Connection Piping Kit — Follow "Restrictions on Installing Multi Connection Piping Kit"

Cutting procedure
- Use pipe cutter for cutting.

Pipe cutter — Joint or Reducer — Connection area — Connection pipe — Cut near the center of the connection area

1P236135

❶ Installation examples — Procedure for upper connection

1 — 1 Connection of gas and liquid pipes

Piese be sure to read **Restrictions on installing multi connection piping kit** and **Restriction on piping between outside units.**

- Connect the gas and liquid pipes as shown on the right figure.
  (When connecting the pipes, first connect the gas-side accessory pipe and the gas-side reducer to the gas-side joint, and the liquid-side reducer to the liquid-side joint.)
- See the caution section in the installation manual attached to the outside unit for brazing pipes.
- When mounting the joints, place them horizontal to the ground by facing the caution label (See View A).

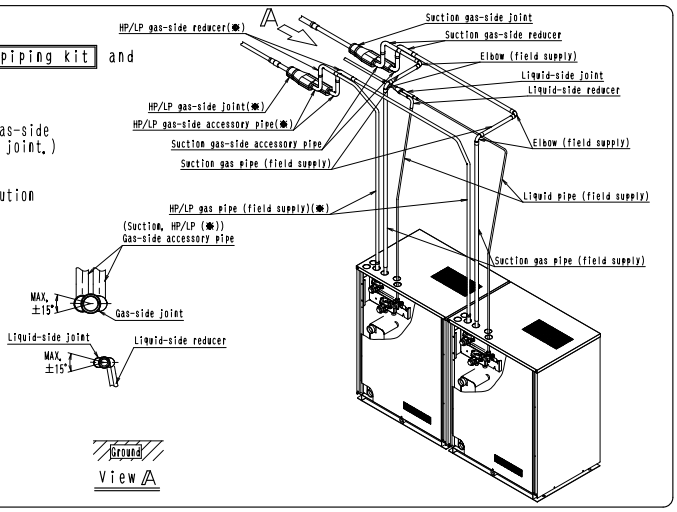

❷ The work after the kit is connected

Connection of piping between the outside unit and the indoor unit
Air tight test

Follow the instructions on installation manual included with the outside unit, when performing installation works.

Insulation of joints

(1) Fit the insulation on the reducer and temporarily keep it in place with tape.
(2) • Cut-off the slit on insulation to match direction of the reducer.
  • Fit the insulation on the joint and temporally keep it in place with tape (field supply) without any gap between the insulation. (See the right figure)
(3) Seal between the insulation and the field supply pipes with the tape.
(4) Wrap the tape around the insulation attached to the joint without leaving any gap.
(▨ part on the right figure(4))

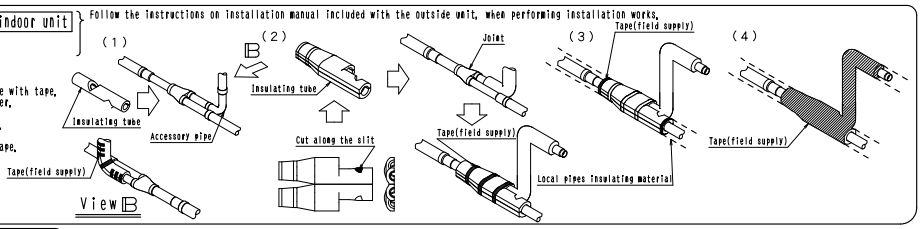

BHFP26MA84 Installation Instructions

⚠Caution There are some restrictions on the interconnecting pipes between the outside units. See the installation manual attached to the outside units and make sure to carry out proper piping. If the piping restrictions are not observed, it may result in breakdown of the unit.

Connecting pipe sizes and location of cutting the joint Select either a joint or a reducer which is suitable for the size of the interconnecting pipes determined according to the table below and cut it with a pipe cutter.

Main pipe
• Select according to system capacity of the outside unit. (units : mm)

System capacity of outside unit	Pipe size (outer diameter X Min thickness)		
	Suction gas pipe	HP/LP gas pipe(✱)	Liquid pipe
RWEYQ24 type	ϕ34.9X1.21	ϕ28.6X0.99	ϕ15.9X0.99
RWEYQ26-30 type			ϕ19.1X0.80

Pipe between the kits
• Select according to total capacity of the combination of units. (units : mm)

Total capacity of outside unit	Pipe size (outer diameter X Min thickness)		
	Suction gas pipe	HP/LP gas pipe(✱)	Liquid pipe
16HP	ϕ28.6X0.99	ϕ22.2X0.80	ϕ12.7X0.80
18, 20HP			ϕ15.9X0.99

Capacity type of outside unit	Pipe size (outer diameter X Min thickness)		
	Suction gas pipe	HP/LP gas pipe(✱)	Liquid pipe
RWEYQ8 type	ϕ19.1X0.80	ϕ15.9X0.99	ϕ9.5X0.80
RWEYQ10 type	ϕ22.2X0.80	ϕ19.1X0.80	

(units : mm)

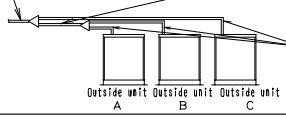

Cutting procedure
• Use pipe cutter for cutting.

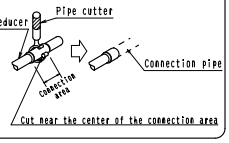

❶ Installation examples — Procedure for upper connection

1 — 1 Connection of gas and liquid pipes

Piese be sure to read **Restrictions on installing multi connection piping kit** and **Restriction on piping between outside units.**

- Connect the gas and liquid pipes as shown on the right figure.
  (When connecting the pipes, first connect the gas-side accessory pipe and the gas-side reducer to the gas-side joint, and the liquid-side reducer to the liquid-side joint.)
- See the caution section in the installation manual attached to the outside unit for brazing pipes.
- When mounting the joints, place them horizontal to the ground by facing the caution label (See View A).

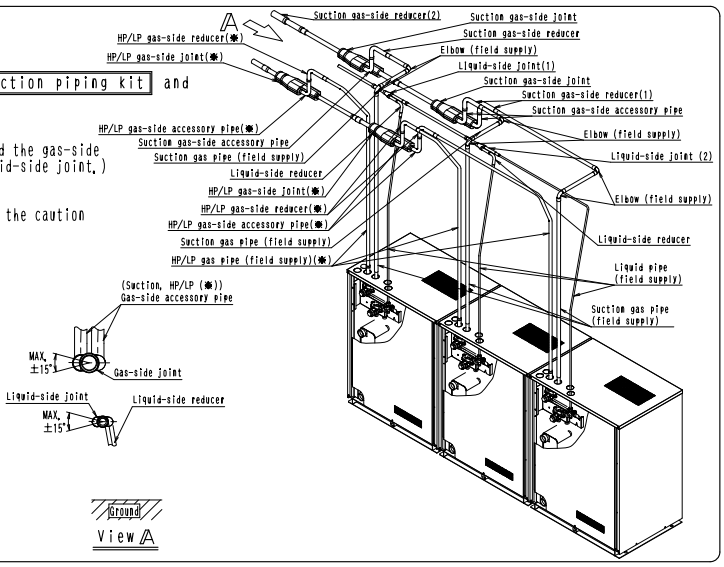

❷ The work after the kit is connected

Connection of piping between the outside unit and the indoor unit
Air tight test

Follow the instructions on installation manual included with the outside unit, when performing installation works.

Insulation of joints

(1) Fit the insulation on the reducer and temporarily keep it in place with tape.
(2) • Cut-off the slit on insulation to match direction of the reducer.
  • Fit the insulation on the joint and temporally keep it in place with tape (field supply) without any gap between the insulation. (See the right figure)
(3) Seal between the insulation and the field supply pipes with the tape.
(4) Wrap the tape around the insulation attached to the joint without leaving any gap.
(▨ part on the right figure(4))

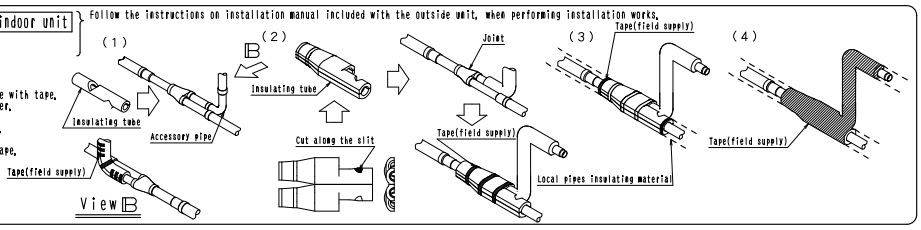

1P236135

5.5 BHFP22P36 / 54C

Installation Manual

Component parts ■This kit contains the following parts. **<Do not throw away any of the accessories until installation is complete.>**

Kit name	Shape: Gas-side joint	Liquid-side joint	Gas-side of reducer	Liquid-side of reducer	Insulating tube (1) (Big)	Insulating tube (2) (Small)
BHFP22P 36C	I.D.φ25.4, I.D.φ28.6, I.D.φ19.1, I.D.φ25.4, I.D.φ15.9, I.D.φ22.2 — 1pc	I.D.φ15.9, I.D.φ15.9, I.D.φ12.7, I.D.φ12.7, I.D.φ9.5, I.D.φ9.5 — 1pc	I.D.φ15.9, I.D.φ19.1, I.D.φ25.4 — 1pc	I.D.φ9.5, I.D.φ12.7, O.D.φ15.9 — 1pc	1pc	1pc
BHFP22P 54C	(1) I.D.φ25.4, I.D.φ28.6, I.D.φ31.8, I.D.φ25.4, I.D.φ22.2 — 1pc; (2) I.D.φ25.4, I.D.φ28.6, I.D.φ19.1, I.D.φ25.4, I.D.φ19.1, I.D.φ22.2 — 1pc	(1) I.D.φ15.9, I.D.φ15.9, I.D.φ15.9, I.D.φ12.7, I.D.φ9.5 — 1pc; (2) I.D.φ15.9, I.D.φ15.9, I.D.φ12.7, I.D.φ12.7, I.D.φ9.5, I.D.φ9.5 — 1pc	I.D.φ15.9, I.D.φ19.1, I.D.φ25.4 — 2pc	I.D.φ9.5, I.D.φ12.7, O.D.φ15.9 — 2pc	2pc	2pc
				O.D.φ15.9, O.D.φ19.1 — 1pc		

Caution
- See the outdoor unit's installation manual for outdoor unit installation.
- Installation of interconnecting piping between the outdoor and indoor units, REFNET joint or REFNET header will be needed separately.
- This kit is special multi system of two (BHFP22P36C only) and three (BHFP22P54C only) outdoor units.
- Use the reducer (Straight type) in BHFP22P54C if necessary.

Selection Procedure

Number of outdoor units connected	2 units	3 units
Outdoor unit Multi Connection Piping Kit	BHFP22P36C	BHFP22P54C

Field supply parts ■The following parts are needed to connect this kit and are not included.

Field supply parts		
Name	Q'ty	Selection Procedure
Insulation for piping	1set	See the "Connecting pipe size and location of cutting the joint • L type of reducer" for details on the necessary size.
Connection piping		
Tape		For insulation materials

⚠To the piping installer When installing this kit, please apply the following restrictions.

Restrictions on Installing Joint
- Install the joint horizontally so that the caution label attached to joint comes to the top. Do not tilt the joint more than ±15° (See Fig. 1). In addition, do not install the joint vertically (See Fig. 2).
- Make sure the piping up to the joint is straight for more than 500mm. Do not bend the field piping within this range. If a straight field piping more than 120mm is connected, more than 500mm of straight section can be ensured (See Fig. 3).
- Improper installation may lead to malfunction of the outdoor unit.

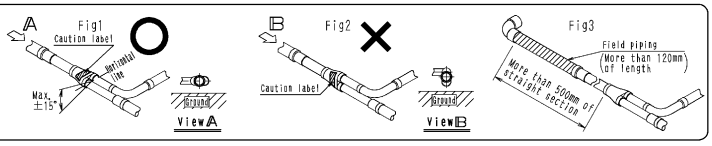

<Caution>
- When installing the multi system, connect the units as shown in the figure at the right order. If install the system with different order, the Outdoor unit multi connection piping kit may not suit and some pipe size reducer (field supply) may be required.

BHFP22P36C Installation methods

connecting pipe size and location of cutting the joint • L type of reducer
- Select connecting pipe size according to right table.
- Joint and L type of reducer of this kit Cut pipe size to adjust connecting pipe.
- If the pipe size of φ22.2 or larger is used, the O material may be insufficient to withstand the specified pressure. Therefore, make sure to use the 1/2H material or H material.
- Connect presenting pipe with main connecting pipe of outdoors unit multi connection piping kit. (If connecting pipe of presenting pipe is vary, connect different size socket after field supply.)
- See the cutting procedure for the cutting position of both joint and L type of reducer.

Cutting procedure
- Use pipe cutter for cutting.
- Cut a joint and reducer in order that their fit depths should be 15mm or more. (See the figure at the right)

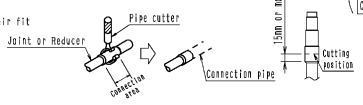

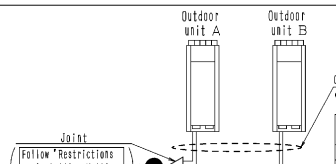

Connecting pipe between the joint and the outdoor unit
- See the table below and Select connecting pipe size according to the structure capacity type

(units : mm)

The structure capacity type	Pipe size: Gas pipe	Liquid pipe
Q140	φ15.9X1.0[O]	φ9.5X0.8[O]
Q180	φ19.1X1.0[1/2H]	

- See the table below and Select connecting pipe size according to the system of generic type name of outdoor unit.

(units : mm)

The system generic type name of Outdoor unit	Pipe size: Gas pipe	Liquid pipe
Q280	φ22.2X1.0[1/2H]	φ9.5X0.8[O]
Q360	φ25.4X1.0[1/2H]	φ12.7X0.8[O]

1-1 Installation examples — Procedure for Front Connection

1-1 Exterior view

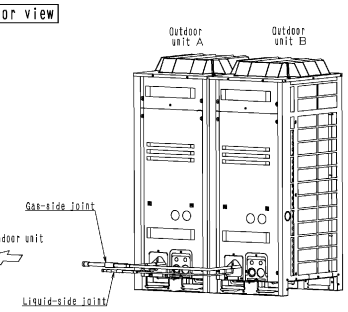

1-2 Finished dimensions
- A standard installation has the following dimensions.
- When installation dimensions is vary, adjust the pipes between the outdoors unit and the joint (Field supply).

(units : mm)

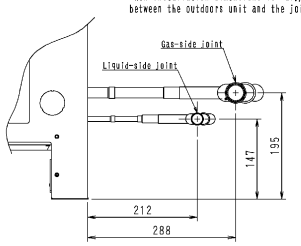

Outdoor unit multi connection piping kit position
(Left side drawing of exterior view)

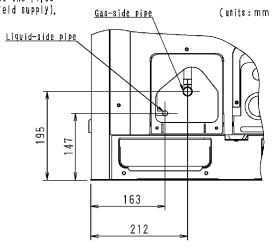

Outdoor unit connecting pipe position

1-2 Connection of gas-side and liquid-side pipe

2-1 Cutting suction gas-side pipe
- Cut the gas-side pipe 1 (Field supply) according to Table 1.

Caution: The Table 1 is applied to cutting dimensions about 1-2 Finished dimensions of 1-1 Installation examples. If the finished dimension is not same, see Table 1 and adjust cutting length of gas-side pipe 1 (Field supply).

■ Table 1

The system of generic type name of Outdoor unit	Gas-side pipe 1 (Field supply) L (mm)
Q280	113
Q360	146

■ Table 2

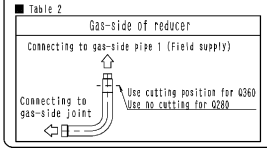

2-2 Connection of pipes
- Connect gas-side and liquid-side pipe as following the procedure on the right figure.
- See 1-2 Finished dimensions of 1-1 Installation examples for the location (height) of the joints.
- See the caution section in the installation manual attached to the outdoor unit for brazing pipe
- Install the joints so that an attached face of the caution label keeps horizontally. (See the view C)
- Connect gas-side and liquid-side of reducer keeps horizontally. (See the view C)
- Refer of connecting pipe size and location of cutting the joint • L type of reducer and Table 2 for the cutting position of both joint and gas-side of reducer. (Liquid-side of reducer don't cut)

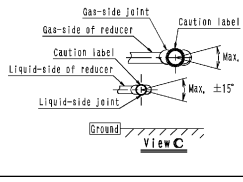

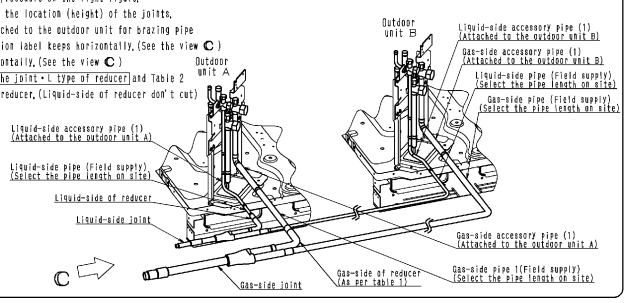

1P261547A

1-3 Insulation construction of joint

Follow the instruction in the installation manual included with the outdoor unit, when performing insulation construction of joints after finished all of pipe construction and airtight test as following procedure on the below method.
Procedure for insulation construction of joints. (See the figure at the right)
(1) Fit the insulating tube to the L type of reducer and temporarily keep it in place with tape. (Using the insulating tube) For ø25.4 → The insulating tube(1), For ø15.9 → The insulating tube(2)
(2) Fit the insulation to the joint and temporarily keep it in place with tape without leaving a gap between the insulation mating faces.
(3) Seal the seam between the insulation attached to the joint, the insulating tube (1)(2) and the field supply piping insulation with the field supply tape.
(4) Wrap the tape around the insulation attached to the joint and the insulating tube (1)(2) without leaving a gap. (▨ section shown in the figure at the right.)

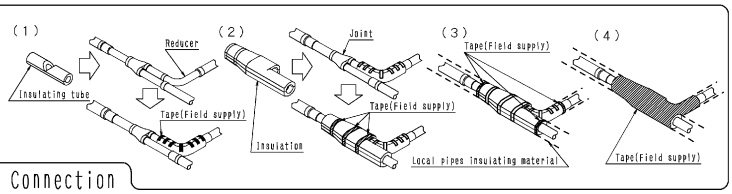

2-1 Installation examples — Procedure for Lower Front Connection

1-1 Exterior view

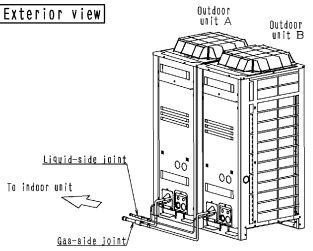

1-2 Finished dimensions

• A standard installation has the following dimensions.
• When the dimensions exceed the standard installation, extend the pipes between the outdoor unit and the joint(field supply).

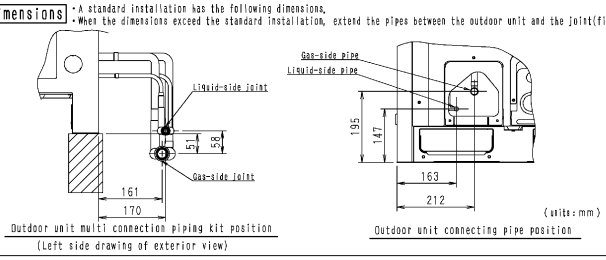

2-2 Connection of gas-side and Liquid-side pipe

- Connect gas-side and liquid-side pipe as following the procedure on the right figure.
- See 1-2 Finished dimensions of 2-1 Installation examples for the location (height) of the joints.
- See the caution section in the installation manual attached to the outdoor unit for brazing pipe.
- Install the joints so that an attached face of the caution label keeps horizontally. (See the view D)
- To connect joint Gas-side and liquid-side of reducer as at horizontally. (see the view D)
- Refer of connecting pipe size and location of cutting the joint・L type of reducer and Table 1 for the cutting position of both joint and gas-side of reducer. (Liquid-side of reducer don't cut)

■ Table 1

Gas-side of reducer
Connecting to gas-side pipe 1 (Field supply) ↑ Connecting to gas-side joint ← Use cutting position for Q360 / Use no cutting for Q280

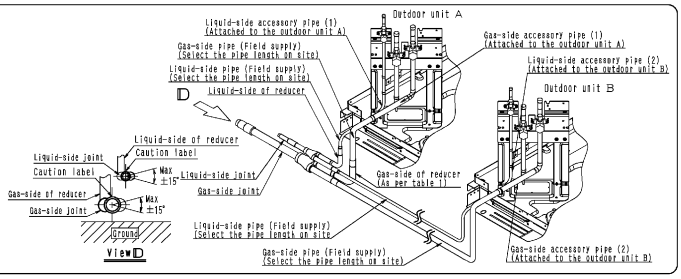

2-3 Insulation construction of joint

Follow the instruction in the installation manual included with the outdoor unit, when performing insulation construction of joints after finished all of pipe construction and airtight test as following procedure on the below method.
Procedure for insulation construction of joints. (See the figure at the right)
(1) Fit the insulating tube to the L type of reducer and temporarily keep it in place with tape. (Using the insulating tube) For ø25.4 → The insulating tube(1), For ø15.9 → The insulating tube(2)
(2) Fit the insulation to the joint and temporarily keep it in place with tape without leaving a gap between the insulation mating faces.
(3) Seal the seam between the insulation attached to the joint, the insulating tube (1)(2) and the field supply piping insulation with the field supply tape.
(4) Wrap the tape around the insulation attached to the joint and the insulating tube (1)(2) without leaving a gap. (▨ section shown in the figure at the right.)

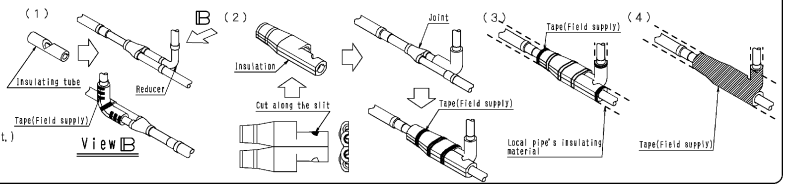

3-1 Installation examples — Procedure for Bottom Connection

⚠Caution This installation is only possible if there is enough space to perform brazing and racking underneath the outdoor unit.

1-1 Exterior view

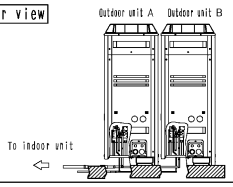

1-2 Finished dimensions

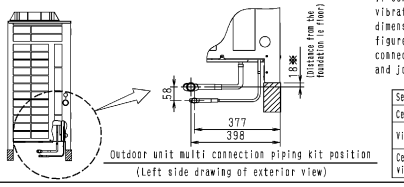

Caution
If central drain pan kit and a centralized vibration proof base are used, the dimensions marked with "✱" in the figure left will vary, so the length of connected pipe between outdoor unit and joint (field supply) adjust.
(Units: mm)

Separately-sold item also used	✱dimensions
Central drain pan kit	233
Vibration absorption stand	
Central drain pan kit and vibration absorption stand	

3-2 Connection gas-side and liquid-side pipe

- Connect gas-side and liquid-side pipe as following the procedure on the right figure.
- See 1-2 Finished dimensions of 3-1 Installation examples for the location (height) of the joints.
- See the caution section in the installation manual attached to the outdoor unit for brazing pipe.
- Install the joints so that an attached face of the caution label keeps horizontally. (See the view F)
- Connect gas-side and liquid-side of reducer keeps horizontally. (See the view F)
- Refer of connecting pipe size and location of cutting the joint・L type of reducer and Table 1 for the cutting position of both joint and gas-side of reducer. (Liquid-side of reducer don't cut)

■ Table 1

Gas-side of reducer
Connecting to gas-side pipe 1 (Field supply) ↑ Connecting to gas-side joint ← Use cutting position for Q360 / Use no cutting for Q280

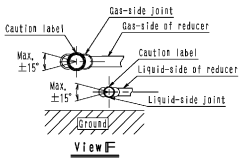

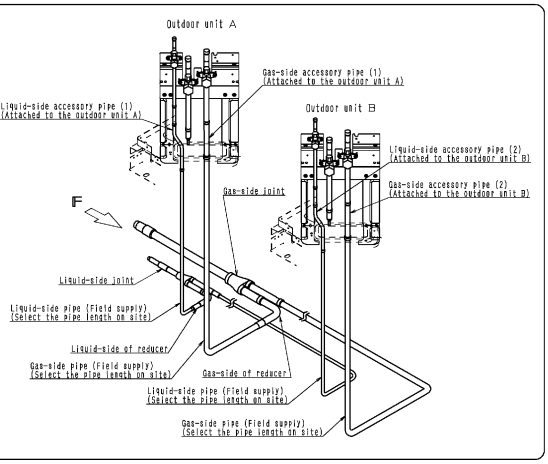

continue to reverse side

1P261547A

3-3 Insulation construction of joints

Follow the instruction in the installation manual included withthe outdoor unit, when performing insulation construction of joints after finished all of pipe construction and airtight test as following procedure on the below method.

<Procedure for insulation construction of joints, >
(See the figure at the right)

(1) Fit the insulating tube to the L type of reducer and temporarily keep it in place with tape.
(Using the insulating tube) For Φ25, 4 → The insulating tube(1), For Φ15, 9 → The insulating tube(2)
(2) Fit the insulation to the joint and temporarily keep it in place with tape without leaving a gap between the insulation mating faces.
(3) Seal the seam between the insulation attached to the joint, the insulating tube (1)(2) and the field supply piping insulation with the field supply tape
(4) 27 Wrap the tape around the insulation attached to the joint and the insulating tube (1)(2) without leaving a gap.
(section shown in the figure at the right.)

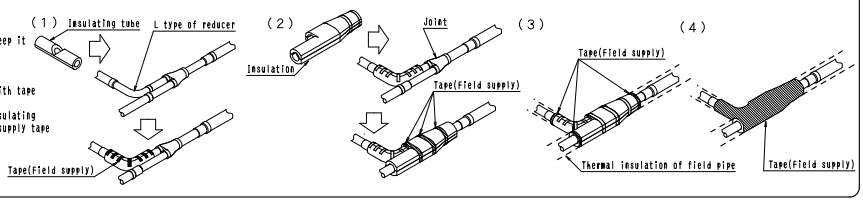

BHFP22P54C Installation methods

Connecting pipe sizes and location of cutting the joint・L type of reducer

- Select the size of the connecting pipe according to right side table.
- Cut this kit joint and L type of reducer at adjust size.
- If the pipe size of φ22.2 or larger is used, the O material may be insufficient to withstand the specified pressure. Therefore, make sure to use the 1/2H material.
- Connect presenting pipe with main connecting pipe of outdoors unit multi connection piping kit. (If connecting pipe of presenting pipe is vary, connect different size socket after field supply.)
- See the cutting procedure for the cutting position of both joint and L type of reducer.

Cutting procedure

- Use pipe cutter for cutting.
- Cut a joint and reducer in order that their fit depths should be 15mm or more.

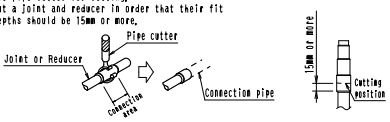

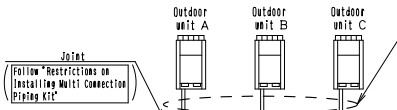

● See the table below and Select connecting pipe size according to the structure type capacity. (units : mm)

The system generic type name of Outdoor unit	Pipe size	
	Gas pipe	Liquid pipes
Q460	φ28.6×1.0[1/2H]	φ12.7×0.8[0]
Q500		φ15.9×1.0[0]
Q540		

Connecting pipe between the joint and the outdoor unit

● See the table below and Select connecting pipe size according to the structure type capacity. (units : mm)

The structure capacity type	Pipe size	
	Gas pipe	Liquid pipe
Q140	φ15.9×1.0[0]	φ9.5×0.8[0]
Q180	φ19.1×1.0[1/2H]	

Connecting pipe between the joint and the outdoor unit

● See the table below and select upper connecting pipe size according to total structure type capacity.
For example
When with type Q500 (A:Q180+B:Q180+C:Q140) and type upper connecting the structure type are Q180 type and Q140 type.
[Total structure type capacity]=180+140=320 (units : mm)

Total structure type capacity	Pipe size	
	Gas pipe	Liquid pipe
280	φ22.2×1.0[1/2H]	φ9.5×0.8[0]
320		
360	φ25.4×1.0[1/2H]	φ12.7×0.8[0]

4-1 Installation examples — Procedure for Front Connection

1-1 Exterior view

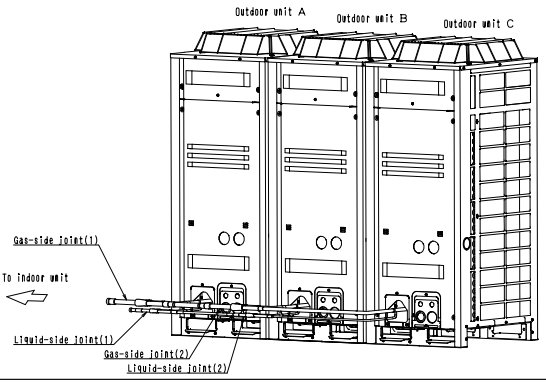

1-2 Finished dimensions

- For installations where the A dimensions exceed 318mm, extend the field supply interconnecting pipe between the joint and the outdoor unit.

(units : mm)

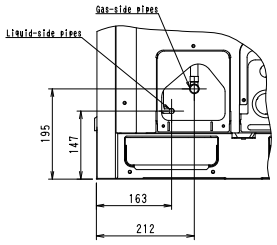

Outdoor unit connecting pipe position

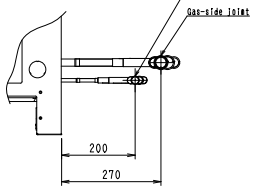

Outdoor unit multi connection piping kit position
(Left side drawing of exterior view)

4-2 Connection of gas-side and liquid-side pipe

2-1 Cutting the field supply gas-side and liquid-side pipe

- Cut the Suction gas pipe 1, 2 (Field supply) according to Table 1, 2.

Caution The Table 1 is applied to cutting dimensions about 1-2 Finished dimensions of 1-1 Installation examples. If the finished dimension is not same, see Table 1 and adjust cutting length of gas-side pipe 1, 2 (Field supply).

■ Table 1

The system of generic type name of Outdoor unit	Gas-side pipes 1(Field supply) L (mm)	Gas-side pipes 2(Field supply) L (mm)
Q460	128	113
Q500		146
Q540		

■ Table 2

Gas-side of reducer (outdoor unit A)	Gas-side of reducer (outdoor unit B)
Connecting to gas-side pipe 1(Field supply)	Connecting to gas-side pipe 2(Field supply)
Connecting to gas-side joint (1) — Use cutting this position	Connecting to gas-side joint (2) — Use cutting position for Q500 and Q540. Use no cutting for Q460

2-2 Connection of pipes

- Connect gas-side and liquid-side pipes as following the procedure on the below figure.
- See 1-2 Finished dimensions of 1-1 Installation examples for the location (height) of the joints.
- See the caution section in the installation manual attached to the outdoor unit for brazing pipes.
- Install the joints so that an attached face of the caution label keeps horizontally. (See the view G)
- Refer of connecting pipe size and location of cutting the joint・L type of reducer and Table 2 for the cutting position of both joint and gas-side of reducer. (Liquid-side of reducer don't cut)

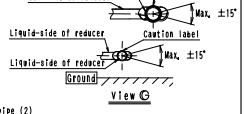

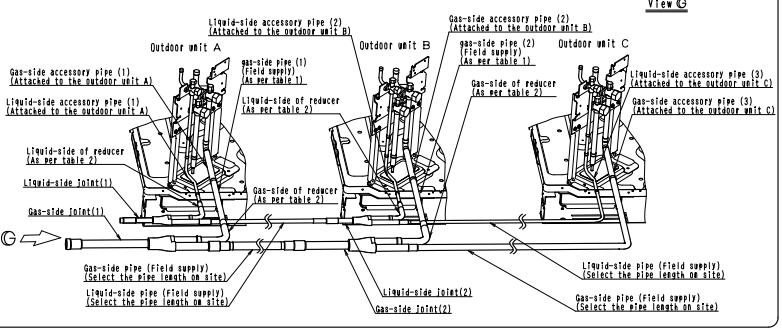

4-3 Insulation construction of joints

Follow the instruction in the installation manual included withthe outdoor unit, when performing insulation construction of joints after finished all of pipe construction and airtight test as following procedure on the below method.

<Procedure for insulation construction of joints, >
(See the figure at the right)

(1) Fit the insulating tube to the L type of reducer and temporarily keep it in place with tape.
(Using the insulating tube) For Φ25, 4 → The insulating tube(1), For Φ15, 9 → The insulating tube(2)
(2) Fit the insulation to the joint and temporarily keep it in place with tape without leaving a gap between the insulation mating faces.
(3) Seal the seam between the insulation attached to the joint, the insulating tube (1)(2) and the field supply piping insulation with the field supply tape
(4) Wrap the tape around the insulation attached to the joint and the insulating tube (1)(2) without leaving a gap.
(section shown in the figure at the right.)

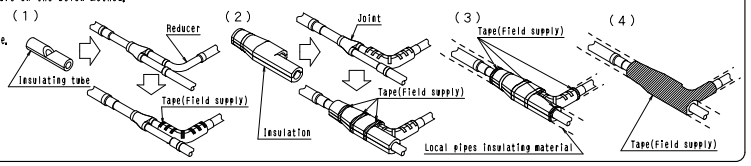

1P261548A

5-1 Installation examples Procedure for Lower Front Connection

1-1 Exterior view

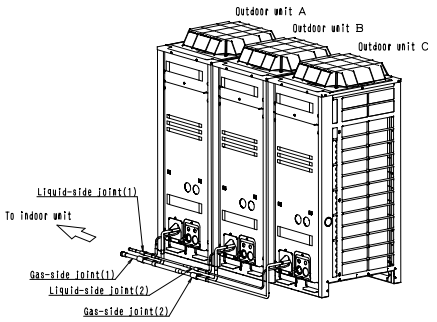

1-2 Finished dimensions

- A standard installation has the following dimensions.
- When the dimensions exceed the standard installation, extend the pipes between the outdoor unit and the joint(Field supply).

(units : mm)

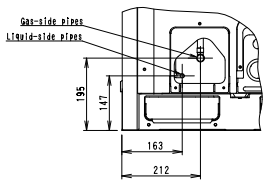

Outdoor unit connecting pipe position

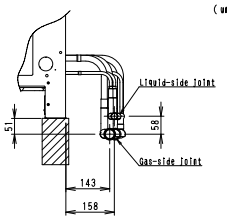

Outdoor unit multi connection piping kit position
(Left side drawing of exterior view)

5-2 Connection of gas-side and liquid-side pipe

- Connect gas-side and liquid-side pipe as following the procedure on the right figure.
- See 1-2 Finished dimensions of 5-1 Installation examples for the location (height) of the joints.
- See the caution section in the installation manual attached to the outdoor unit for brazing pipe.
- Install the joints so that an attached face of the caution label keeps horizontally. (See the view H)
- Connect gas-side and liquid-side of reducer keeps horizontally. (See the view H)
- Refer of Connecting pipe size and location of cutting the joint・L type of reducer and Table 1 for the cutting position of both joint and gas-side of reducer. (Liquid-side of reducer don't cut)

■ Table 1

Gas-side of reducer (outdoor unit A)	Gas-side of reducer (outdoor unit B)
Connecting to gas-side pipe(field supply)	Connecting to gas-side pipe(field supply)
Connecting to gas-side joint (1) — Use cutting this position	Connecting to gas-side joint (2) — Use cutting position for Q500 and Q540. Use no cutting for Q460

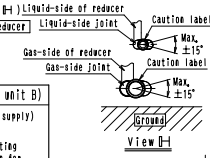

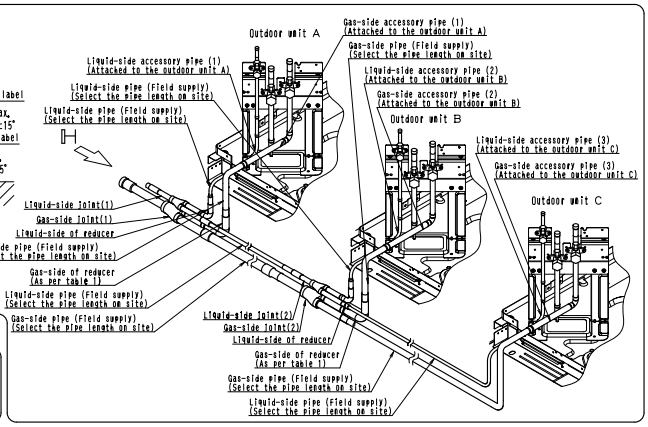

5-3 Insulation construction of joints

- See 2-3 insulation construction of joints for a Lower front connection."

6-1 Installation examples Procedure for Bottom Connection

⚠Caution This installation is only possible if there is enough space to perform brazing and racking underneath the outdoor unit.

1-1 Exterior view

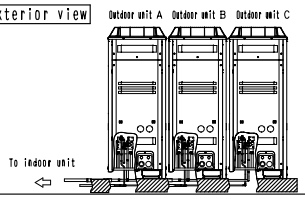

1-2 Finished dimensions

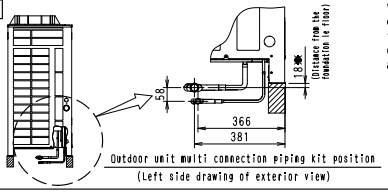

Outdoor unit multi connection piping kit position
(Left side drawing of exterior view)

Caution
If central drain pan kit and a centralized vibration proof base are used, the dimensions marked with "✱" in the figure left will vary, so the length of connected pipe between outdoor unit and joint (field supply) adjust.

(Units : mm)

Separately-sold Item also used	✱dimensions
Central drain pan kit	233
Vibration absorption stand	
Central drain pan kit and vibration absorption stand	

6-2 Connection of gas-side and liquid-side pipe

- Connect gas-side and liquid-side pipe as following the procedure on the right figure.
- See 1-2 Finished dimensions of 6-1 Installation examples for the location (height) of the joints.
- See the caution section in the installation manual attached to the outdoor unit for brazing pipe.
- Install the joints so that an attached face of the caution label keeps horizontally. (See the view J)
- Connect gas-side and liquid-side of reducer keeps horizontally. (See the view J)
- Refer of Connecting pipe size and location of cutting the joint・L type of reducer and Table 1 for the cutting position of both joint and gas-side of reducer. (Liquid-side of reducer don't cut)

■ Table 1

Gas-side of reducer (outdoor unit A)	Gas-side of reducer (outdoor unit B)
Connecting to gas-side pipe(Field supply)	Connecting to gas-side pipe(Field supply)
Connecting to gas-side joint (1) — Use cutting this position	Connecting to gas-side joint (2) — Use cutting position for Q500 and Q540. Use no cutting for Q460

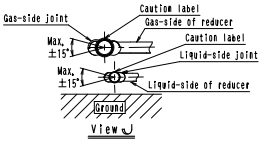

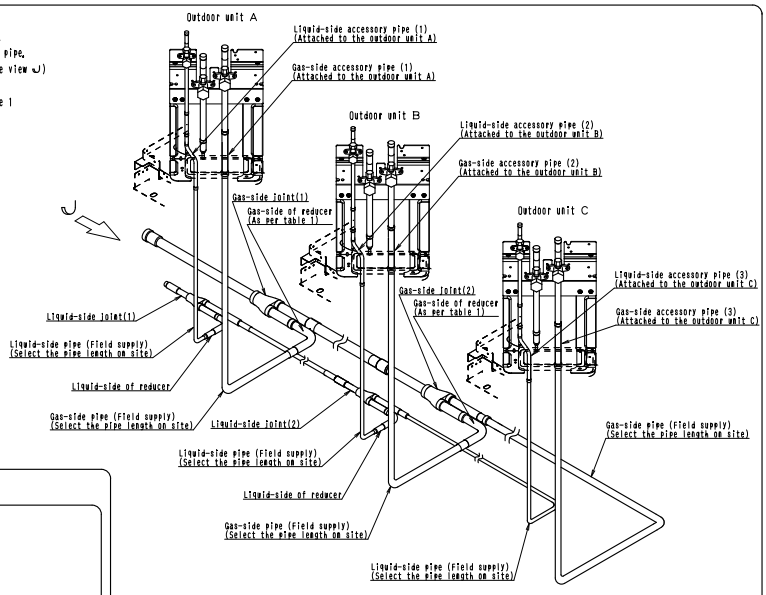

6-3 Insulation construction of joints

- See 3-3 insulation construction of joints for a Lower front connection.

1P261548A

5.6 BHFP26P36C

Installation Manual

Component parts ■This kit contains the following parts. **<Do not throw away any of the accessories until installation is complete.>**

Kit name	Shape: Suction gas-side joint	HP/LP gas-side joint	Liquid-side joint	Insulating tube
BHFP26P36C	I.D ø25.4, I.D ø28.6, I.D ø25.4, I.D ø22.2, I.D ø15.9, I.D ø15.9 — 1pc	I.D ø15.9, I.D ø15.9, I.D ø15.9, I.D ø19.1, I.D ø12.7, I.D ø22.2 — 1pc	I.D ø15.9, I.D ø15.9, I.D ø12.7, I.D ø12.7, I.D ø9.5, I.D ø9.5 — 1pc	(1) (Big) — 1pc
	L type of reducer			
	(1) I.D ø15.9, I.D ø19.1, O.D ø25.4 — 1pc	(2) I.D ø12.7, I.D ø15.9, O.D ø15.9 — 1pc	(3) I.D ø9.5, I.D ø12.7, O.D ø15.9 — 1pc	(2) (Small) — 2pc

Caution

- See the outdoor unit's installation manual for outdoor unit installation.
- Installation of interconnecting piping between the outdoor, indoor and BS units, REFNET joint or REFNET header will be needed separately.
- This kit is special multi system of two outdoor unit.

Field supply parts ■The following parts are needed to connect this kit and are not included.

Field supply parts		
Name	Q'ty	Selection Procedure
Insulation for piping	1set	See the "Connecting pipe size and location of cutting the joint・L type of reducer" for details on the necessary size.
Connection piping		
Tape		For insulation materials

⚠To the piping installer When installing this kit, please apply the following restrictions.

Restrictions on Installing Joint

- Install the joint horizontally so that the caution label attached to joint comes to the top. Do not tilt the joint more than ±15° (See Fig. 1). In addition, do not install the joint vertically(See Fig. 2).
- Make sure the piping up to the joint is straight for more than 500mm. Do not bend the field piping within this range. If a straight field piping more than 120mm is connected, more than 500mm of straight section can be ensured(See Fig. 3).
- Improper installation may lead to malfunction of the outdoor unit.

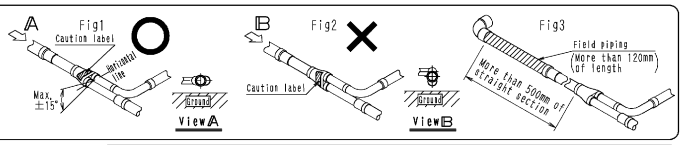

<Caution>

- When installing the multi system, connect the units as shown in the figure at the right order. If install the system with different order, the Outdoor unit multi connection piping kit may not suit and some pipe size reducer(field supply) may be required.

Unit capacity A≧B

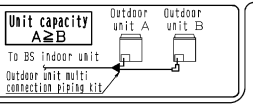

Connecting pipe size and location of cutting the joint・L type of reducer

- Select connecting pipe size according to right table.
- Joint and L type of reducer of this kit Cut pipe size to adjust connecting pipe.
- If the pipe size of ø22.2 or larger is used, the O material may be insufficient to withstand the specified pressure. Therefore, make sure to use the 1/2H material or H material.
- Connect presenting pipe with main connecting pipe of outdoors unit multi connection piping kit. (If connecting pipe of presenting pipe is vary, connect different size socket after field supply.)
- See the cutting procedure for the cutting position of both joint and L type of reducer.

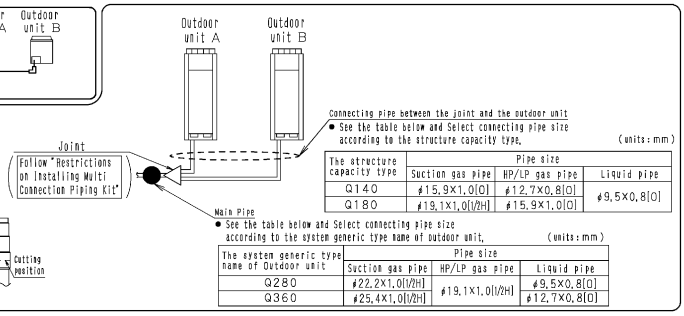

- See the table below and Select connecting pipe size according to the structure capacity type. (units: mm)

The structure capacity type	Pipe size: Suction gas pipe	HP/LP gas pipe	Liquid pipe
Q140	ø15.9×1.0[O]	ø12.7×0.8[O]	ø9.5×0.8[O]
Q180	ø19.1×1.0[1/2H]	ø15.9×1.0[O]	

- See the table below and Select connecting pipe size according to the system generic type name of outdoor unit. (units: mm)

The system generic type name of Outdoor unit	Pipe size: Suction gas pipe	HP/LP gas pipe	Liquid pipe
Q280	ø22.2×1.0[1/2H]	ø19.1×1.0[1/2H]	ø9.5×0.8[O]
Q360	ø25.4×1.0[1/2H]		ø12.7×0.8[O]

Cutting procedure

- Use pipe cutter for cutting.
- Cut a joint and reducer in order that their fit depths should be 15mm or more. (See the figure at the right)

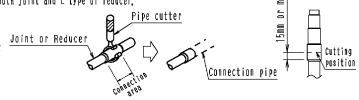

1-1 Installation examples Procedure for Front Connection

1-1 Exterior view

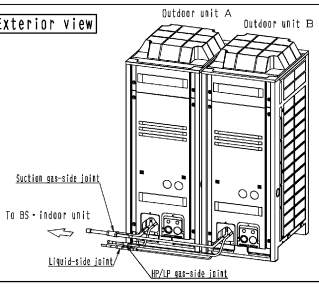

1-2 Finished dimensions

- A standard installation has the following dimensions.
- When installation dimensions is vary, adjust the pipes between the outdoors unit and the joint (Field supply).

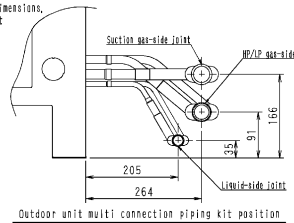

Outdoor unit multi connection piping kit position
(Left side drawing of exterior view)

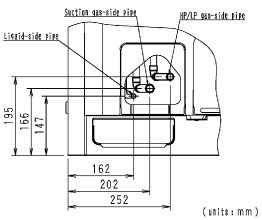

Outdoor unit connecting pipe position

1-2 Connection of suction gas-side and HP/LP gas-side pipe

2-1 Cutting the field supply Suction gas-side pipe 1

- Cut the Suction gas pipe gas pipe(Field supply) according to Table 1.

Caution This table shows cutting dimension by (1-2 Finished dimensions) of (1-1 Installation examples). When finished dimensions is vary, adjust cutting length of the suction gas pipe 1 (Field supply) according to Table 1.

■ Table 1

The system of generic type name of outdoor unit	Suction gas-side pipe 1(Field supply) L (mm)
Q280	90
Q360	122

■ Table 2

Suction gas-side	HP/LP gas-side
L type of reducer(1)	L type of reducer(2)
Connecting to Suction gas-side pipe 1 (Field supply)	Connecting to HP/LP gas-side pipe (Field supply)
Connecting to Suction gas-side joint — Use cutting position for Q360. Use no cutting for Q280	Connecting to HP/LP gas-side joint — Use cutting position for Q360. Use no cutting for Q280

2-2 Connection of pipes

- Connect suction gas-side and HP/LP gas-side pipes as following the procedure on the below figure.
- See (1-2 Finished dimensions) of (1-1 Installation examples) for the location (height) of the joints.
- See the caution section in the installation manual attached to the outdoor unit for brazing pipes.
- Connect joint HP/LP gas-side L type of reducer (2) as at about 40 inclination. (See the view C)
- Refer of (connecting pipe size and location of cutting the joint・L type of reducer) and Table 2 for the cutting position of joint and L type of reducer (1)(2).

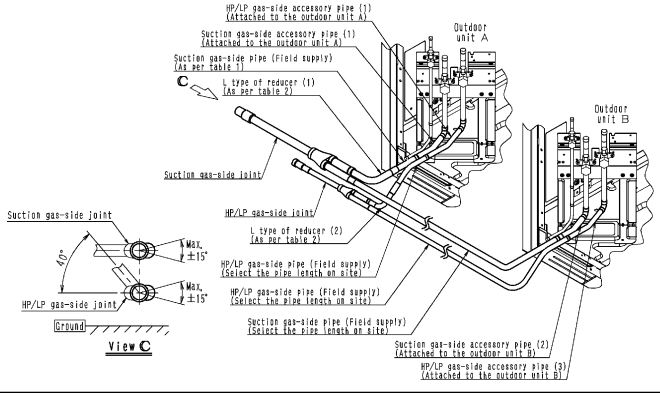

1P261421A

1-3 Connection of Liquid-side pipe

- Connect liquid-side pipes as following procedure on the right figure.
- See 1-2 Finished dimensions of 1-1 Installation examples for the location (Height) of the joints.
- See the caution section in the installation manual attached to the outdoor unit for brazing pipe.
- Install the joints so that an attached face of the caution label keeps horizontally. (See the view D)
- Connect joint L type of reducer (3) as at about 60 inclination. (See the view D)
- Refer of connecting pipe size and location of cutting the joint・L type of reducer for location of cutting the joint. (L type of reducer(3)don't cut)

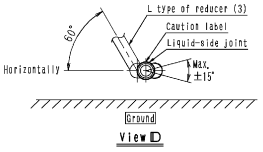

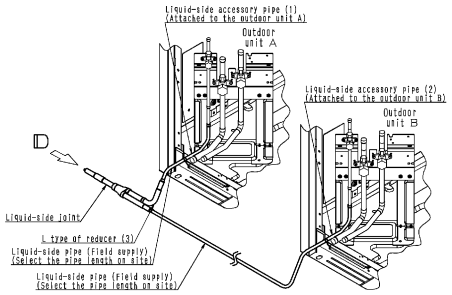

1-4 Insulation construction of joint

Follow the instruction in the installation manual included with the outdoor unit, when performing insulation construction of joints after finished all of pipe construction and airtight test as following procedure on the below method.

Procedure for insulation construction of joints. (See the figure at the right)

(1) Fit the insulating tube to the L type of reducer and temporarily keep it in place with tape.
(Using the insulating tube) For φ25, 4 → The insulating tube(1).
For φ15, 9 → The insulating tube(2)
(2) Fit the insulation to the joint and temporarily keep it in place with tape without leaving a gap between the insulation mating faces.
(3) Seal the seam between the insulation attached to the joint, the insulating tube (1)(2) and the field supply piping insulation with the field supply tape.
(4) Wrap the tape around the insulation attached to the joint and the insulating tube (1)(2) without leaving a gap. (section shown in the figure at the right.)

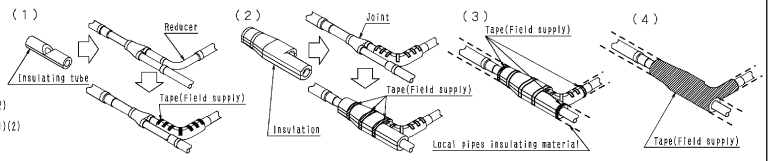

2-1 Installation examples Procedure for Lower Front Connection

1-1 Exterior view

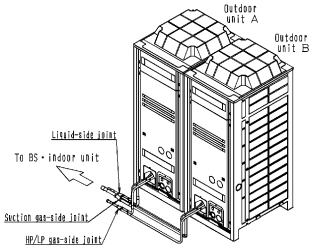

1-2 Finished dimensions

- A standard installation has the following dimensions.
- When the dimensions exceed the standard installation, extend the pipes between the outdoor unit and the joint(Field supply).

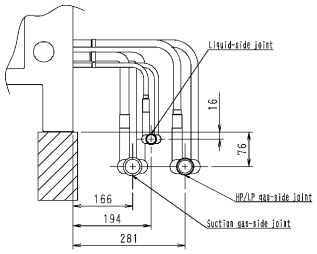

Outdoor unit multi connection piping kit position
(Left side drawing of exterior view)

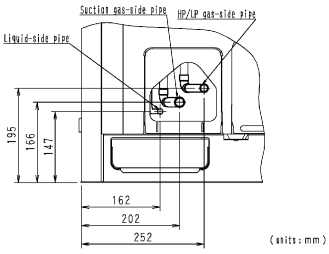

Outdoor unit connecting pipe position

2-2 Connection of suction gas-side and HP/LP gas-side pipe

- Connect suction gas-side and HP/LP gas-side pipes as following procedure on the right figure.
- See 1-2 Finished dimensions of 2-1 Installation examples for the location (Height) of the joints.
- See the caution section in the installation manual attached to the outdoor unit for brazing pipe.
- Install the joints so that an attached face of the caution label keeps horizontally. (See the view E)
- L type of reducer (1)(2) Connect vertical. (See the view E)
- Refer of connecting pipe size and location of cutting the joint・L type of reducer and Table 1 for location of cutting the joint and L type of reducer (1)(2).

■ Table 1

Suction gas-side	HP/LP gas-side
L type of reducer(1)	L type of reducer(2)
Connecting to Suction gas-side pipe (Field supply) 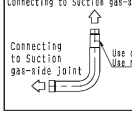	Connecting to HP/LP gas-side pipe (Field supply) 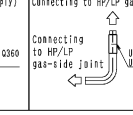

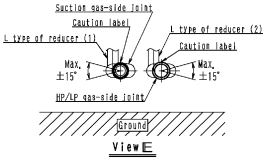

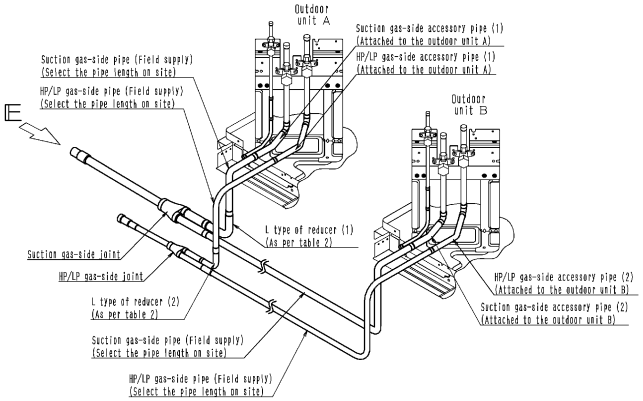

continue to reverse side

1P261421A

2-3 Connection of Liquid-side pipe

- Connect liquid pipe as following the procedure on the right figure.
- See [1-2 Finished dimensions] of [3-1 Installation examples] for the location (height) on the joints.
- See the caution section in the installation manual attached to the outdoor unit for the brazing pipes.
- Install the joints so that an attached face of the caution label keeps horizontally. (see the view F)
- L type of reducer (3) connect vertical. (See the view F)
- Refer of [connecting pipe size and the cutting position of joint and L type of reducer] for the cutting position of joint. (L type reducer (3) don't cut)

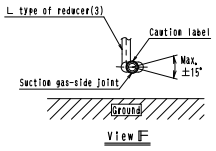

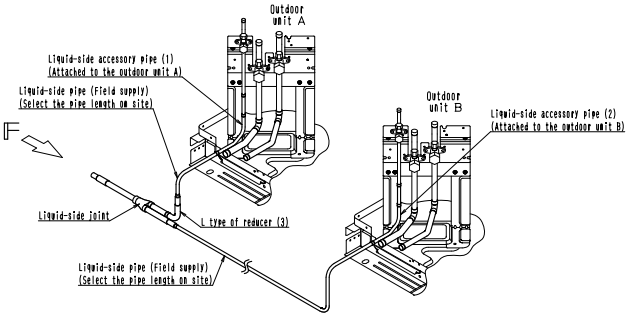

2-4 Insulation construction of joints

Follow the instruction in the installation manual included with the outdoor unit when performing insulation construction of joints after finished all of pipe construction and airtight test as following procedure on the below method.

<Procedure for insulation construction of joints> (See the figure at the right)

(1) Fit the insulating tube to L type of reducer and temporarily keep it in place with tape. (Using the insulating tube) For Φ25.4 → the insulating tube(1)
For Φ15.9 → the insulating tube(2)

(2) Fit the insulation to the joint and temporarily keep it in place with tape without leaving a gap between the insulation mating faces.

(3) Seal the seam between the insulation attached to the joint, the insulating tube(1)(2) and the field supply piping insulation with the field supply tape.

(4) Wrap the tape around the insulation attached to the joint and the insulating tube (1)(2) without leaving a gap(section shown in the figure at the right)

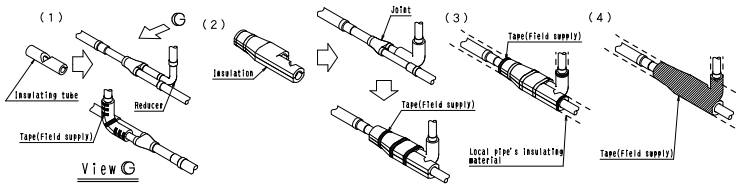

3-1 Installation examples — Procedure for Bottom Connection

Caution This installation is only possible if there is enough space to perform brazing and racking underneath the outdoor unit.

1-1 Exterior view

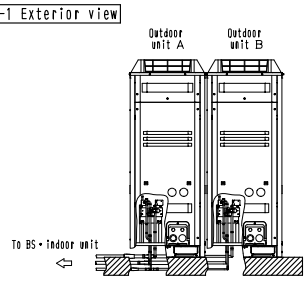

1-2 Finished dimensions

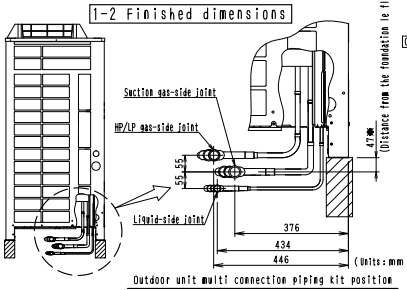

Outdoor unit multi connection piping kit position
(Left side drawing of exterior view)

Caution
If central drain pan kit and a centralized vibration proof base are used, the dimensions marked with "✱" in the figure left will vary, so the length of connected pipe between outdoor unit and joint (field supply) adjust.

(Units : mm)

Separately-sold item also used	✱dimensions
Central drain pan kit	287
Vibration absorption stand	
Central drain pan kit and vibration absorption stand	

3-2 Connection of suction gas-side and HP/LP gas-side pipe

- Connect suction gas-side and HP/LP gas-side pipes as following procedure on the right figure.
- See [1-2 Finished dimensions] of [3-1 Installation examples] for the location (Height) of the joints.
- See the caution section in the installation manual attached to the outdoor unit for brazing pipe.
- Install the joints so that an attached face of the caution label keeps horizontally (See the view H)
- L type of reducer (1)(2) Connect horizontally(See the view H)
- Refer of [connecting pipe size and location of cutting the joint・L type of reducer] and table1 for location of cutting the joint and L Type of reducer(1)(2).

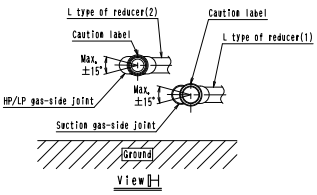

■ Table 1

Suction gas-side	HP/LP gas-side
L type of reducer(1)	L type of reducer(2)
Connecting to Suction gas-side pipe (Field supply)	Connecting to HP/LP gas-side pipe (Field supply)
Connecting to Suction gas-side joint — Use cutting position for Q360; Use no cutting for Q280	Connecting to HP/LP gas-side joint — Use cutting position for Q360; Use no cutting for Q280

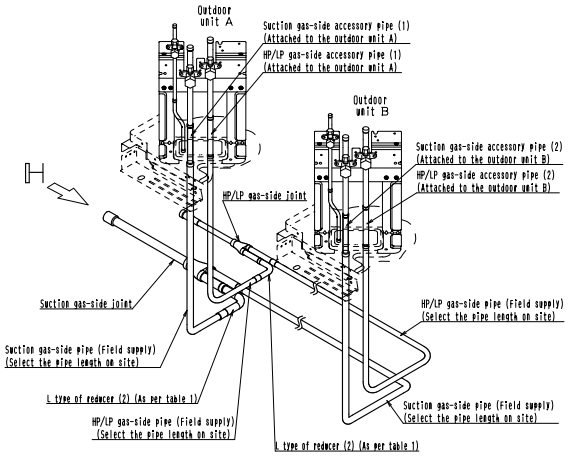

1P261422

3-3 Connection of Liquid-side pipe

- Connect liquid-side pipes as following procedure on the right figure.
- See 1-2 Fitting dimensions of 1-1 Installation examples for the location (Height) of the joints.
- See the caution section in the Installation manual attached to the outdoor unit for brazing pipe.
- Install the joints so that an attached face of the caution label keeps horizontally (See the view J)
- L type of reducer (3) Connect horizontally(See the view J)
- Refer of connecting pipe size and location of cutting the joint・L type of reducer for location of cutting the joint (L Type of reducer(3)don't cut)

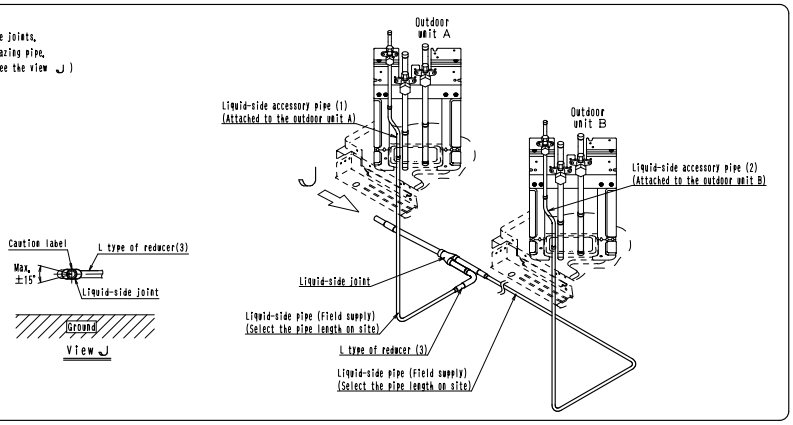

3-4 Insulation construction of joints

Follow the instruction in the installation manual included with the outdoor unit when performing insulation construction of joints after finished all of pipe construction and airtight test as following procedure on the below method.
<Procedure for insulation construction of Joints> (See the figure at the right)

(1) Fit the insulating tube to L type of reducer and temporarily keep it in place with tape. (Using the insulating tube) For Φ25, 4→the insulating tube(1)
For Φ15, 9→the insulating tube(2)

(2) Fit the insulation to the joint and temporarily keep it in place with tape without leaving a gap between the insulation mating faces.

(3) Seal the seam between the insulation attached to the joint, the insulating tube(1)(2) and the field supply piping insulation with the field supply tape.

(4) Wrap the tape around the insulation attached to the joint and the insulating tube (1)(2) without leaving a gap(section shown in the figure at the right)

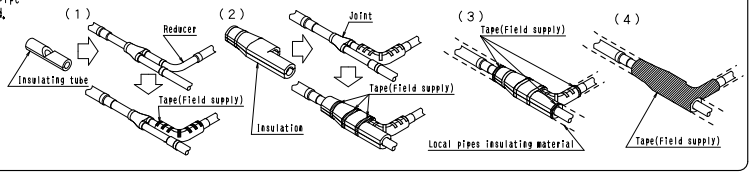

1P261422

5.7 BHFP26P63C

Installation Manual

Component parts ■This kit contains the following parts.<Do not throw away any of the accessories until installation is complete.>

Kit name	Shape: Suction gas-side joint	HP/LP gas-side joint	Liquid-side joint	L type of reducer	Reducer
BHFP26P63C	(1) I.D ϕ25.4, I.D ϕ28.6, I.D ϕ28.6, I.D ϕ31.8, I.D ϕ25.4, I.D ϕ22.2 — 1pc	(1) I.D ϕ25.4, I.D ϕ28.6, I.D ϕ22.2, I.D ϕ25.4, I.D ϕ19.1, I.D ϕ22.2 — 1pc	(1) I.D ϕ15.9, I.D ϕ15.9, I.D ϕ15.9, I.D ϕ12.7, I.D ϕ12.7, I.D ϕ9.5 — 1pc	(1) I.D ϕ15.9, I.D ϕ19.1, O.D ϕ25.4 — 3pc	I.D ϕ19.1, O.D ϕ15.9 — 1pc; Insulating tube (1) (Big) — 3pc; (2) (Small) — 3pc
	(2) I.D ϕ25.4, I.D ϕ28.6, I.D ϕ25.4, I.D ϕ19.1, I.D ϕ22.2, I.D ϕ15.9 — 1pc	(2) I.D ϕ15.9, I.D ϕ15.9, I.D ϕ19.1, I.D ϕ15.9, I.D ϕ22.2, I.D ϕ12.7 — 1pc	(2) I.D ϕ15.9, I.D ϕ15.9, I.D ϕ12.7, I.D ϕ12.7, I.D ϕ9.5, I.D ϕ9.5 — 1pc	(2) I.D ϕ12.7, I.D ϕ15.9, O.D ϕ15.9 — 1pc	
				(3) I.D ϕ9.5, I.D ϕ12.7, O.D ϕ15.9 — 2pc	

Caution
- See the outdoor unit's installation manual for outdoor unit installation.
- Installation of interconnecting piping between the outdoor, indoor and BS units, REFNET joint or REFNET header will be needed separately.
- This kit is special multi system of three outdoor unit.
- Use the reducer in kit if necessary.

Field supply parts ■The following parts are needed to connect this kit and are not included.

Field supply parts		
Name	Q'ty	Selection Procedure
Insulation for piping	1set	See the "Connecting pipe size and location of cutting the joint・L type of reducer" for details on the necessary size.
Connection piping		
Tape		For insulation materials

⚠To the piping installer When installing this kit, please apply the following restrictions.

Restrictions on Installing Joint
- Install the joint horizontally so that the caution label attached to joint comes to the top. Do not tilt the joint more than ±15° (See Fig. 1). In addition, do not install the joint vertically(See Fig.2).
- Make sure the piping up to the joint is straight for more than 500mm. Do not bend the field piping within this range. If a straight field piping more than 120mm is connected, more than 500mm of straight section can be ensured(See Fig.3).
- Improper installation may lead to malfunction of the outdoor unit.

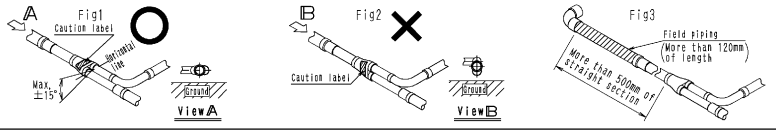

<Caution>
- When installing the multi system, connect the units as shown in the figure at the right order. If install the system with different order, the Outdoor unit multi connection piping kit may not suit and some pipe size reducer(field supply) may be required.

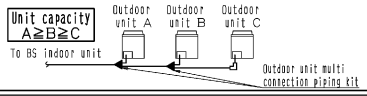

Connecting pipe sizes and location of cutting the joint・L type of reducer
- Select connecting pipe size according to right table.
- Joint and L type of reducer of this kit Cut pipe size to adjust connecting pipe.
- If the pipe size of ϕ22.2 or larger is used, the O material may be insufficient to withstand the specified pressure. Therefore, make sure to use the 1/2H material or H material.
- Connect presenting pipe with main connecting pipe of outdoors unit multi connection piping kit. (If connecting pipe of presenting pipe is vary, connect different size socket after field supply.)
- See the cutting procedure for the cutting position of both joint and L type of reducer.

Cutting procedure
- Use pipe cutter for cutting.
- Cut a joint and reducer in order that their fit depths should be 15mm or more.

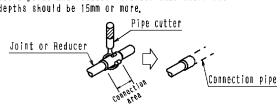

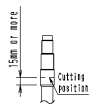

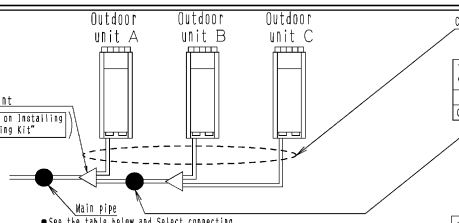

●See the table below and Select connecting pipe size according to the system of generic type name of outdoor unit (unit:mm)

The system generic type name of Outdoor unit	Pipe size: Suction gas pipe	HP/LP gas pipe	Liquid pipe
Q460	ϕ28.6×1.0[1/2H]	ϕ22.2×1.0[1/2H]	ϕ12.7×1.0[O]
Q500			ϕ15.9×1.0[O]
Q540			
Q636		ϕ25.4×1.0[1/2H]	

Connecting pipe between the joint and the outdoor unit
●See the table below and Select connecting pipe size according to the structure type capacity (units:mm)

The structure capacity type	Pipe size: Suction gas pipe	HP/LP gas pipe	Liquid pipe
Q140	ϕ15.9×1.0[O]	ϕ12.7×0.8[O]	ϕ9.5×0.8[O]
Q180・212	ϕ19.1×1.0[1/2H]	ϕ15.9×1.0[O]	

Connecting pipe between the joint and the outdoor unit
●See the table below and Select upper connecting pipe size according to total structure type capacity
(For example)
When with type Q500(A:Q180+B:Q180+C:Q140)and type upper connecting the structure type are Q180 type and Q140 type
{Total structure type capacity}=180+140=320 (units:mm)

Total structure capacity type	Pipe size: Suction gas pipe	HP/LP gas pipe	Liquid pipe
280	ϕ22.2×1.0[1/2H]	ϕ19.1×1.0[1/2H]	ϕ9.5×0.8[O]
360	ϕ25.4×1.0[1/2H]		ϕ12.7×0.8[O]
424	ϕ28.6×1.0[1/2H]	ϕ22.2×1.0[1/2H]	

1-1 Installation examples Procedure for Front Connection

1-1 Exterior view

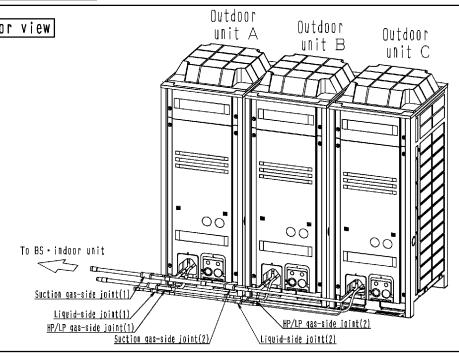

1-2 Finished dimensions
- A standard installation has the following dimensions.
- When installation dimensions is vary, adjust the pipes between the outdoors unit and the joint (Field supply).

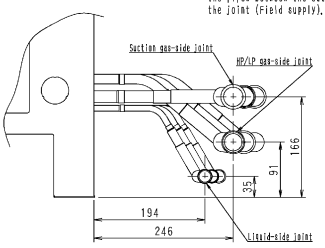

Outdoor unit multi connection piping kit position
(Left side drawing of exterior view)

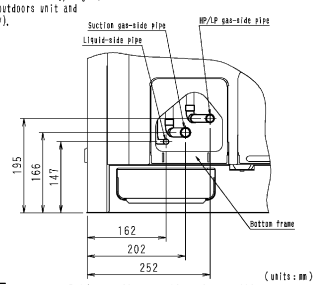

Outdoor unit connecting pipe position

1-2 Connection of suction gas-side and HP/LP gas-side pipe

2-1 Cutting the field supply Suction gas-side pipe 1, 2
- Cut the suction gas-side pipe 1, 2(Field supply) according to Table 1.

Caution The Table 1 is applied to cutting dimensions about 1-2 Finished dimensions of 1-1 Installation examples.
If the finished dimension is not same, see Table 1 and adjust cutting length of suction gas-side pipe 1, 2(Field supply).

■ Table 1

The system of generic type name of outdoor unit	Suction gas-side pipe 1 (Field supply) L (mm)	Suction gas-side pipe 2 (Field supply) L (mm)
Q460	105	90
Q500~Q636		122

1P261549A

2-2 Connection of pipes

- Connect suction gas-side and HP/LP gas-side pipes as following procedure on the right figure.
- See 1-2 Finished dimensions of 1-1 Installation examples for the location (Height) of the joints.
- See the caution section in the installation manual attached to the outdoor unit for brazing pipe.
- Install the joints so that an attached face of the caution label keeps horizontally. (See the view Ⓒ)
- Connect joint L type of reducer (1)(2), of HP/LP gas side as at about 40 inclination. (See the view Ⓒ)
- Refer of connecting pipe size and location of cutting the joint・L type of reducer and Table 2 are for location of cutting the joint and L type of reducer (1)(2).

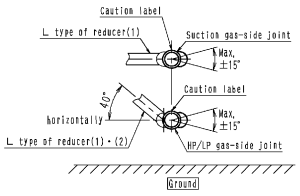

View Ⓒ

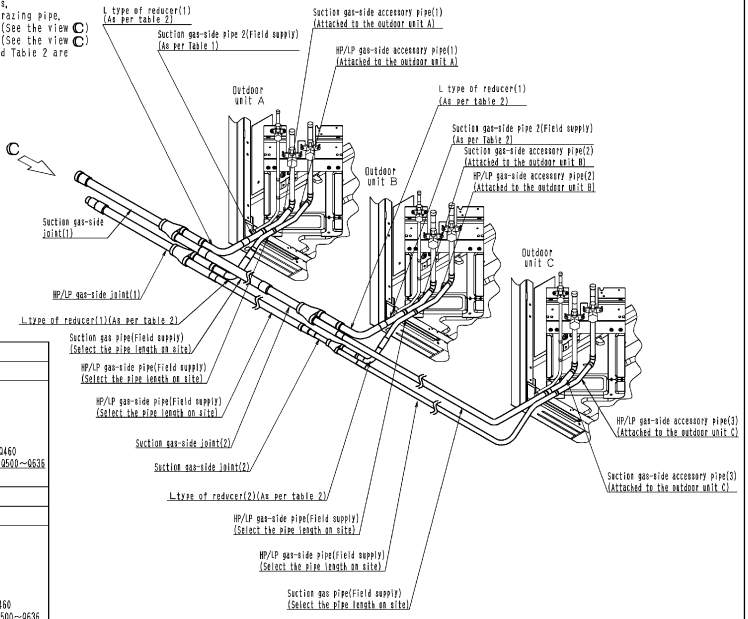

■ Table 2

Suction gas-side	
L type of reducer(1)(outdoor unit A)	L type of reducer(2)(outdoor unit B)
Connecting to Suction gas-side pipe 1(Field supply)	Connecting to Suction gas-side pipe 2(Field supply)
Connection to Suction gas-side joint(1) — Use cutting this position	Connection to Suction gas-side joint(2) — Use no cutting for Q460; Use cutting position for Q500~Q636
HP/LP gas-side	
L type of reducer(1)(outdoor unit A)	L type of reducer(2)(outdoor unit B)
Connection to HP/LP gas-side pipe(Field supply)	Connection to HP/LP gas-side pipe(Field supply)
Connection to HP/LP gas-side joint(1) — (No cutting)	Connection to HP/LP gas-side joint(2) — Use no cutting for Q460; Use cutting position for Q500~Q636

1-3 Connection of Liquid-side pipe

- Connect liquid-side pipe as following the procedure on the right figure.
- See 1-2 Finished dimensions of 1-1 Installation examples for the location (height) of the joints.
- See the caution section in the installation manual attached to the outdoor unit for brazing pipes.
- Install the joints so that an attached face of the caution label keeps horizontally. (See the view Ⓓ)
- Connect joint L type of reducer (3) as at about 60 inclination. (See the view Ⓓ)
- Refer of connecting pipe size and location of cutting the joint・L type of reducer is for the cutting position of joint. (L type of reducer (3) don't cut)

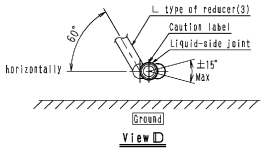

View Ⓓ

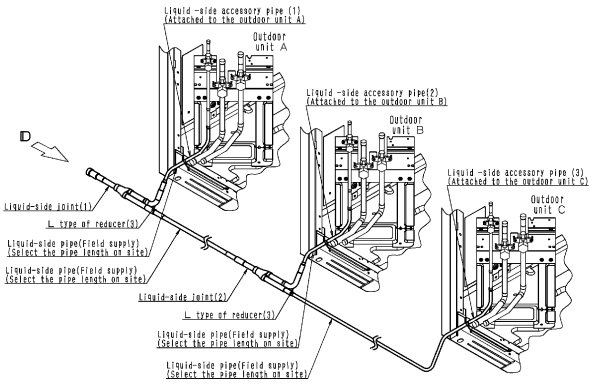

1-4 Insulation construction of joint

Follow the instruction in the installation manual included with the outdoor unit, when performing insulation construction of joints after finished all of pipe construction and airtight test as following procedure on the below method.

Procedure for insulation construction of joints. (See the figure at the right)

(1) Fit the insulating tube to the L type of reducer and temporarily keep it in place with tape.
(Using the insulating tube) For φ25.4 → The insulating tube(1), For φ15.9 → The insulating tube(2)
(2) Fit the insulation to the joint and temporarily keep it in place with tape without leaving a gap between the insulation mating faces.
(3) Seal the seam between the insulation attached to the joint, the insulating tube (1)(2) and the field supply piping insulation with the field supply tape.
(4) Wrap the tape around the insulation attached to the joint and the insulating tube (1)(2) without leaving a gap. (section shown in the figure at the right.)

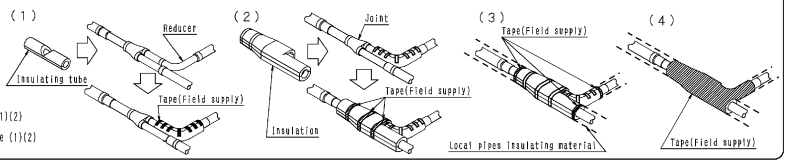

2-1 Installation examples Procedure for Lower Front Connection

1-1 Exterior view

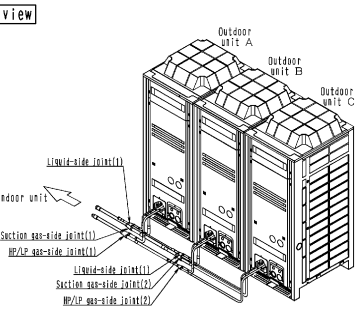

1-2 Finished dimensions

- A standard installation has the following dimensions.
- When the dimensions exceed the standard installation, extend the pipes between the outdoor unit and the joint(Field supply).

(units:mm)

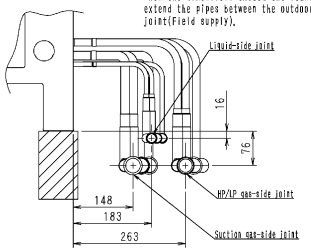

Outdoor unit multi connection piping kit position
(Left side drawing of exterior view)

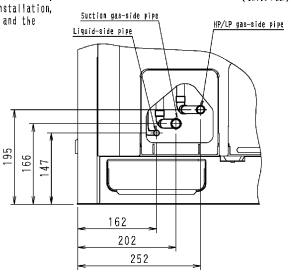

Outdoor unit connecting pipe position

continue to reverse side

1P261549A

2-2 Connection of suction gas-side and HP/LP gas-side pipe

- Connect suction gas-side and HP/LP gas-side pipe as following the procedure on the right figure.
- See [1-2 Flattened dimensions] of [Installation examples] for the location (height) on the joints.
- See the caution section in the installation manual attached to the outdoor unit for the brazing pipes.
- Install the joints so that an attached face of the caution label keeps horizontally. (see the view E)
- Connect L type of reducer (1)(2) as at horizontally. (See the view E)
- Refer of [connecting pipe size and location of cutting the joint・L type of reducer] and Table 1 are for the cutting position of joint and L type reducer (1)(2).

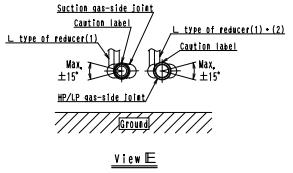

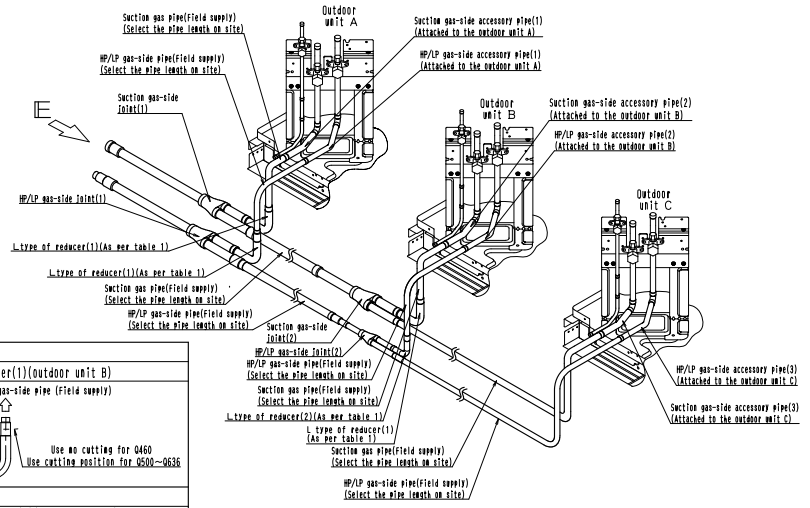

■ Table 1

Suction gas-side	
L type of reducer(1)(outdoor unit A)	L type of reducer(1)(outdoor unit B)
Connecting to Suction gas-side pipe (Field supply) 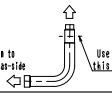	Connecting to Suction gas-side pipe (Field supply) 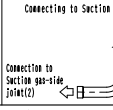
HP/LP gas-side	
L type of reducer(1)(outdoor unit A)	L type of reducer(1)(outdoor unit B)
Connection to HP/LP gas-side pipe(Field supply) 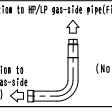	Connection to HP/LP gas-side pipe(Field supply) 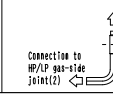

2-3 Connection of Liquid-side pipe

- Connect Liquid-side pipes as following procedure on the right figure.
- See [1-2 Flattened dimensions] of [Installation examples] for the location (Height) of the joints.
- See the caution section in the installation manual attached to the outdoor unit for brazing pipe.
- Install the joints so that an attached face of the caution label keeps horizontally (See the view F)
- L type of reducer (3) Connect horizontally(See the view F)
- Refer of [connecting pipe size and location of cutting the joint・L type of reducer] and Table1 for location of cutting the joint. (L Type of reducer (3) don't cut)

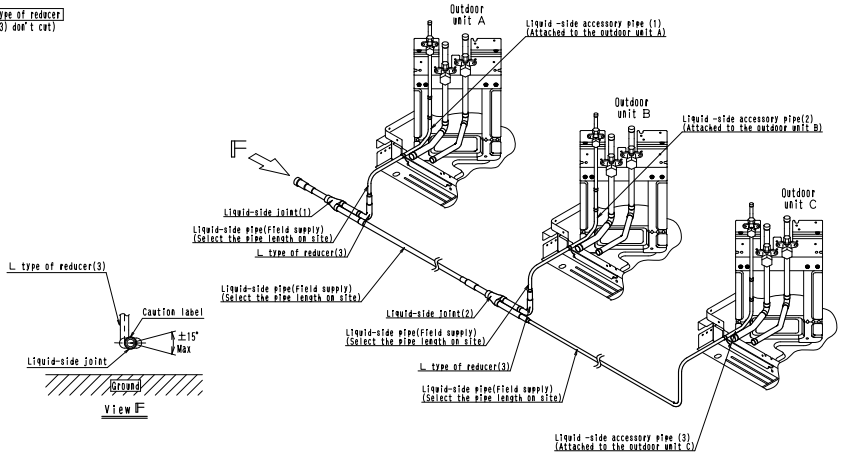

2-4 Insulation construction of joints

Follow the instruction in the installation manual included with the outdoor unit when performing insulation construction of joints after finished all of pipe construction and airtight test as following procedure on the below method.

<Procedure for insulation construction of joints> (See the figure at the right)

(1) Fit the insulating tube to L type of reducer and temporarily keep it in place with tape. (Using the insulating tube) For Φ25, 4→the insulating tube(1)
For Φ15, 9→the insulating tube(2)

(2) Fit the insulation to the joint and temporarily keep it in place with tape without leaving a gap between the insulation mating faces.

(3) Seal the seam between the insulation attached to the joint, the insulating tube(1)(2) and the field supply piping insulation with the field supply tape.

(4) Wrap the tape around the insulation attached to the joint and the insulating tube (1)(2) without leaving a gap(section shown in the figure at the right)

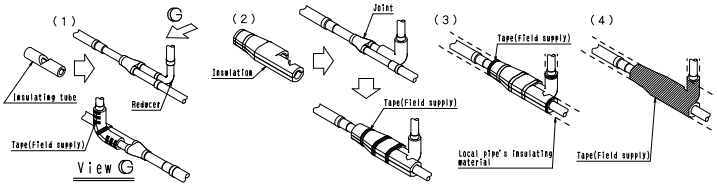

1P261550A

3-1 Installation examples — Procedure for Bottom Connection

Caution This installation is only possible if there is enough space to perform brazing and racking underneath the outdoor unit.

1-1 Exterior view

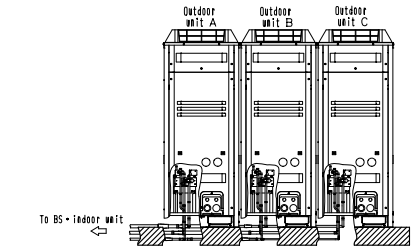

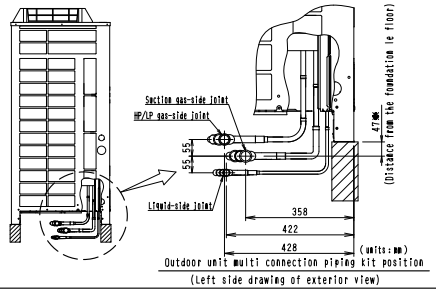

Caution

If central drain pan kit and a centralized vibration proof base are used, the dimensions marked with "✱" in the figure left will vary, so the length of connected pipe between outdoor unit and joint (field supply) adjust.

(Units : mm)

Separately-sold item also used	✱dimensions
Central drain pan kit	287
Vibration absorption stand	
Central drain pan kit and vibration absorption stand	

3-2 Connection of suction gas-side and HP/LP gas-side pipe

- Connect suction gas-side and HP/LP gas-side pipes as following procedure on the right following.
- See 1-2 Flatched dimensions of 3-1 Installation examples for the location (Height) of the joints.
- See the caution section in the installation manual attached to the outdoor unit for brazing pipe.
- Install the joints so that an attached face of the caution label keeps horizontally. (See the view ⊢⊣)
- Connect joint L type of reducer (1)(2) as at horizontally (See the view ⊢⊣)
- Refer of connecting pipe size and location of cutting the joint・L type of reducer and Table 1 are for location of cutting the joint and L type of reducer(1)(2).

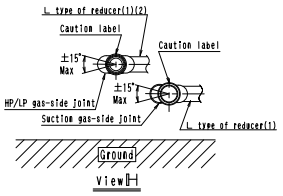

■ Table 1

Suction gas-side	
L type of reducer(1)(outdoor unitA)	L type of reducer(2)(outdoor unit B)
Connecting to Suction gas-side pipe 1(Field supply)	Connecting to Suction gas-side pipe 2(Field supply)
Connection to Suction gas-side joint(1) — Use cutting this position	Connection to Suction gas-side joint(2) — Use no cutting for Q460; Use cutting position for Q500~Q636
HP/LP gas-side	
L type of reducer(1)(outdoor unitA)	L type of reducer(2)(outdoor unit B)
Connection to HP/LP gas-side pipe(Field supply)	Connection to HP/LP gas-side pipe(Field supply)
Connection to HP/LP gas-side joint(1) — (No cutting)	Connection to HP/LP gas-side joint(2) — Use no cutting for Q460; Use cutting position for Q500~Q636

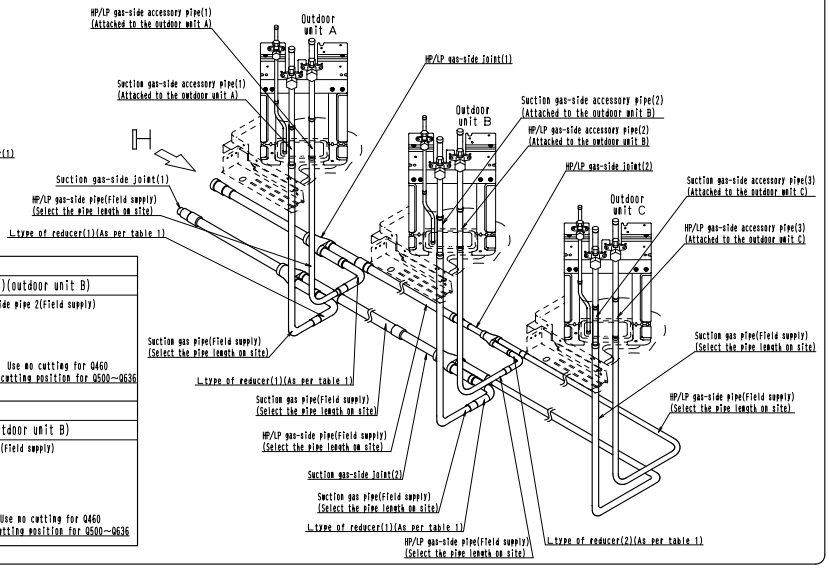

3-3 Connection of Liquid-side and equalizer pipe

- Connect liquid-side pipes as following procedure on the right figure.
- See 1-2 Flatched dimensions of 3-1 Installation examples for the location (Height) of the joints.
- See the caution section in the installation manual attached to the outdoor unit for brazing pipe.
- Install the joints so that an attached face of the caution label keeps horizontally (See the view ⊿)
- L type of reducer (3) Connect horizontally(See the view ⊿)
- Refer of connecting pipe size and location of cutting the joint・L type of reducer for location of cutting the joint (L Type of reducer(3)don't cut)

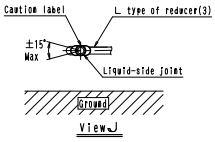

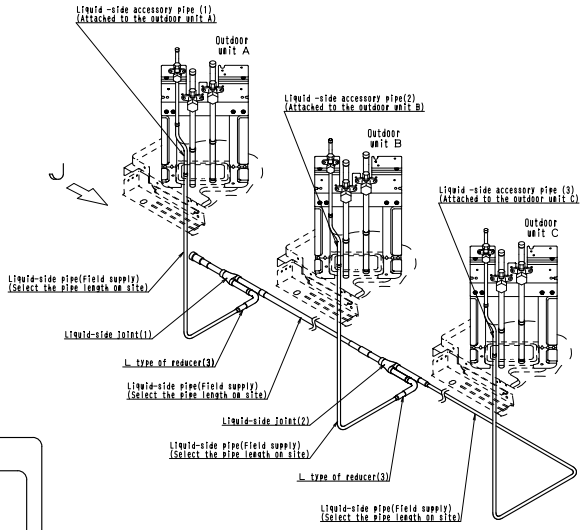

3-4 Insulation construction of joints

- See 1-4 Insulation construction of joints for a Lower front connection.

1P261550A

5.8 BHFP26P84C

Installation Manual

Component parts ■This kit contains the following parts. **<Do not throw away any of the accessories until installation is complete.>**

Kit name	Suction gas-side joint	HP/LP gas-side joint	Liquid-side joint	L type of reducer	Reducer
	Shape (✱)HP/LP gas-side joint(3)and liquid-side joint(1)are same shape parts. Both HP/LP gas-side joint(3)and liquid-side joint(1)can use				
BHFP26P 84C	(1) 1PC	(1) 1PC	(1)(✱) 1PC	(1) 5PC	1PC
	(2) 1PC	(2) 1PC	(2) 1PC	(2) 1PC	Insulating tube (1) (Big) 5PC
	(3) 1PC	(3)(✱) 1PC	(3) 1PC	(3) 3PC	(2) (Small) 4PC
					Suction gas-side reducer 1PC

Caution

- See the outdoor unit's installation manual for outdoor unit installation.
- Installation of interconnecting piping between the outdoor, indoor and BS units, REFNET joint or REFNET header will be needed separately.
- This kit is special multi system of four outdoor unit.
- Use reducers in kit if necessary.

Field supply parts ■The following parts are needed to connect this kit and are not included.

Field supply parts		
Name	Q'ty	Selection Procedure
Insulation for piping	1set	See the "Connecting pipe size and location of cutting the joint・L type of reducer" for details on the necessary size.
Connection piping		
Tape		For insulation materials

⚠To the piping installer When installing this kit, please apply the following restrictions.

Restrictions on Installing Joint

- Install the joint horizontally so that the caution label attached to joint comes to the top. Do not tilt the joint more than ±15° (See Fig. 1). In addition, do not install the joint vertically(See Fig. 2).
- Make sure the piping up to the joint is straight for more than 500mm. Do not bend the field piping within this range. If a straight field piping more than 120mm is connected, more than 500mm of straight section can be ensured(See Fig. 3).
- Improper installation may lead to malfunction of the outdoor unit.

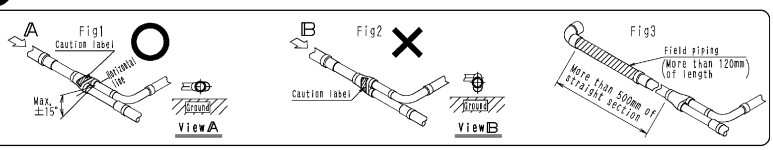

<Caution>

- When installing the multi system, connect the units as shown in the figure at the right order. If install the system with different order, the Outdoor unit multi connection piping kit may not suit and some pipe size reducer(field supply) may be required.

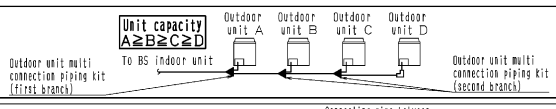

Connecting pipe size and location of cutting the joint・L type of reducer

- Select connecting pipe size according to right table.
- Joint and L type of reducer of this kit cut pipe size to adjust connecting pipe.
- If the pipe size of ϕ22.2 or larger is used, the O material may be insufficient to withstand the specified pressure. Therefore, make sure to use the 1/2H material or H material.
- Connect presenting pipe with main connecting pipe of outdoors unit multi connection piping kit. (If connecting pipe of presenting pipe is vary, connect different size socket after field supply.)
- See the cutting procedure for the cutting position of both joint and L type of reducer.

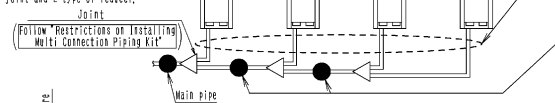

Connecting pipe between the joint and the outdoor unit

- See the table below and select connecting pipe size according to the structure type capacity (units:mm)

The structure capacity type	Pipe size		
	Suction gas pipe	HP/LP gas pipe	Liquid pipe
Q140	ϕ15.9×1.0[O]	ϕ12.7×0.8[O]	ϕ9.5×0.8[O]
Q180・212	ϕ19.1×1.0[1/2H]	ϕ15.9×1.0[O]	

Connecting pipe between the joint and the joint

- See the table below and select upper connecting pipe size according to total structure type capacity

(Example)When with Q744(A:Q212+B:Q212+C:Q180+D:Q140) and upper connecting the structure type are Q180 and Q140, {Total structure capacity type }=180+140=320 (units:mm)

Total structure capacity type	Pipe size		
	Suction gas pipe	HP/LP gas pipe	Liquid pipe
320	ϕ22.2×1.0[1/2H]	ϕ19.1×1.0[1/2H]	ϕ9.5×0.8[O]
392	ϕ25.4×1.0[1/2H]	ϕ22.2×1.0[1/2H]	ϕ12.7×0.8[O]
424	ϕ28.6×1.0[1/2H]		
500−540			ϕ15.9×1.0[O]
604・636		ϕ25.4×1.0[1/2H]	

Cutting procedure

- Use pipe cutter for cutting.
- Cut a joint and reducer in order that their fit depths should be 15mm or more.

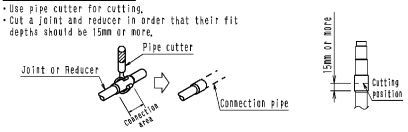

- See the table below and select connecting pipe size according to the system of generic type name of outdoor unit (units:mm)

The system generic type name of Outdoor unit	Pipe size		
	Suction gas pipe	HP/LP gas pipe	Liquid pipe
Q712	ϕ28.6×1.0[1/2H]	ϕ25.4×1.0[1/2H]	ϕ15.9×1.0[O]
Q744	ϕ34.9×1.0[1/2H]	ϕ28.6×1.0[1/2H]	ϕ19.1×1.0[1/2H]
Q816・848			

1-1 Installation examples Procedure for Front Connection

1-1 Exterior view

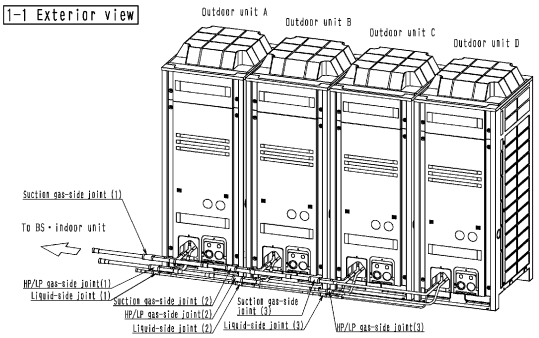

1-2 Finished dimensions

- A standard installation has the following dimensions.
- When installation dimensions is vary, adjust the pipes between the outdoors unit and the joint (Field supply).

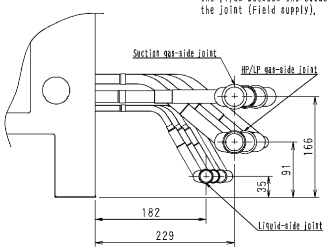

Outdoor unit multi connection piping kit position
(Left side drawing of exterior view)

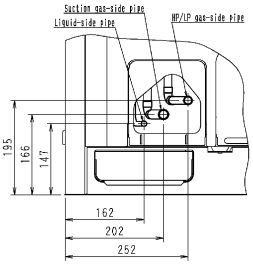

Outdoor unit connecting pipe position

(units:mm)

1-2 Connection of suction gas-side and HP/LP gas-side pipe

2-1 Cutting the field supply Suction gas-side pipe

- Cut the suction gas-side pipe 1~3(Field supply) according to Table 1.

Caution This Table 1 is applied to cutting dimensions about 1-2 Finished dimensions of 1-1 Installation examples. If the finished dimension is not same, see Table 1 and adjust cutting length of gas-side pipe 1~3(Field supply).

■ Table 1

Suction gas-side pipe 1 (Field supply)	Suction gas-side pipe 2 (Field supply)	Suction gas-side pipe 3 (Field supply)
L(mm)	L(mm)	L(mm)
87	105	122

1P261551A

2-2 Connection of pipes

- Connect suction gas-side and HP/LP gas-side pipes as following the procedure on the below figure. (For connection of pipes, at first, connect Suction gas-side joint with Suction gas-side reducer (1) and HP/LP gas-side joint with HP/LP gas-side reducers (1) and (2).)
- See 1-2 Finished dimensions of 1-1 Installation examples for the location (height) of the joints.
- See the caution section in the installation manual attached to the outdoor unit for brazing pipes.
- Install the joints so that an attached face of the caution label keeps horizontally. (See the view C)
- Connect joint L type of reducer(2) as at about 40 inclination (see the view C)
- Refer of both connecting pipe size and location of cutting the joint・L type of reducer and Table 2 for the cuttingposition of both joint and L type of reducer (1), (2).

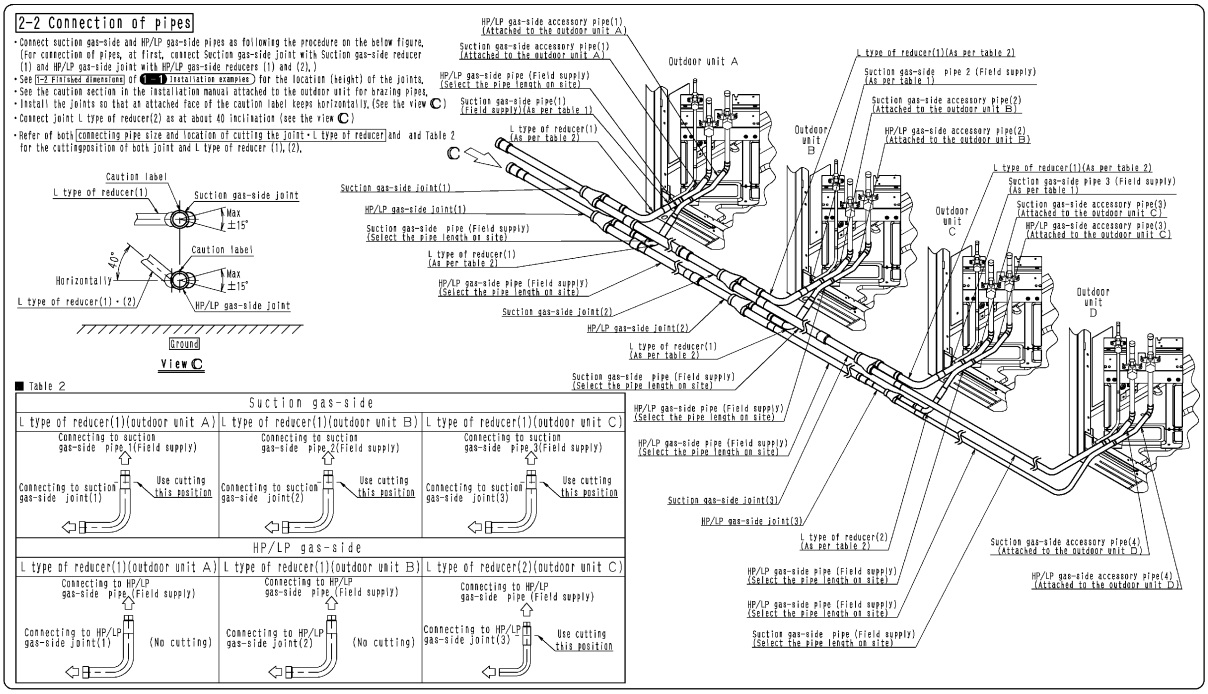

■ Table 2

Suction gas-side		
L type of reducer(1)(outdoor unit A)	L type of reducer(1)(outdoor unit B)	L type of reducer(1)(outdoor unit C)
Connecting to suction gas-side pipe 1(Field supply)	Connecting to suction gas-side pipe 2(Field supply)	Connecting to suction gas-side pipe 3(Field supply)
Connecting to suction gas-side joint(1) / Use cutting this position	Connecting to suction gas-side joint(2) / Use cutting this position	Connecting to suction gas-side joint(3) / Use cutting this position
HP/LP gas-side		
L type of reducer(1)(outdoor unit A)	L type of reducer(1)(outdoor unit B)	L type of reducer(2)(outdoor unit C)
Connecting to HP/LP gas-side pipe (Field supply)	Connecting to HP/LP gas-side pipe (Field supply)	Connecting to HP/LP gas-side pipe (Field supply)
Connecting to HP/LP gas-side joint(1) (No cutting)	Connecting to HP/LP gas-side joint(2) (No cutting)	Connecting to HP/LP gas-side joint(3) / Use cutting this position

1-3 Connection of Liquid-side pipe

- Connect liquid-side pipe as following the procedure on the right figure.
- See 1-2 Finished dimensions of 1-1 Installation examples for the location (height) of the joints.
- See the caution section in the installation manual attached to the outdoor unit for brazing pipe
- Install the joints so that an attached face of the caution label keeps horizontally. (See the view D)
- Connect L type reducer(3) as at about 60 inclination. (See the view D)
- Refer of connecting pipe size and location of cutting the joint・L type of reducer for the cutting position of both joint. (L type of reducer (3) don't cut)

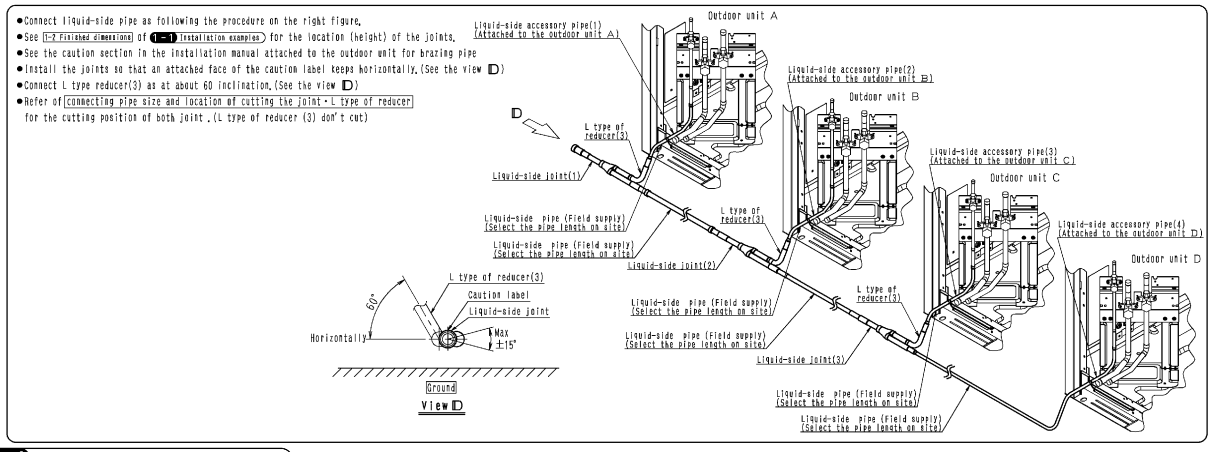

1-4 Insulation construction of joint

Follow the instruction in the installation manual included with the outdoor unit, when performing insulation construction of joints after finished all of pipe construction and airtight test as following procedure on the below method.

Procedure for insulation construction of joints. (See the figure at the right)

(1) Fit the insulating tube to the L type of reducer and temporarily keep it in place with tape.
(Using the insulating tube) For φ25.4 → The insulating tube(1),
For φ15.9 → The insulating tube(2)
(2) Fit the insulation to the joint and temporarily keep it in place with tape without leaving a gap between the insulation mating faces.
(3) Seal the seam between the insulation attached to the joint, the insulating tube (1)(2) and the field supply piping insulation with the field supply tape.
(4) Wrap the tape around the insulation attached to the joint and the insulating tube (1)(2) without leaving a gap. (section shown in the figure at the right.)

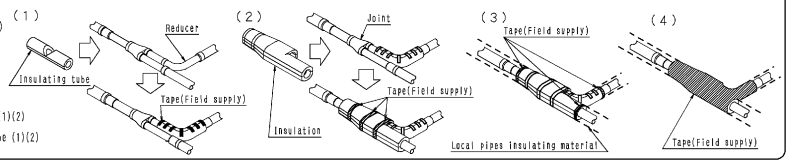

2-1 Installation examples Procedure for Lower Front Connection

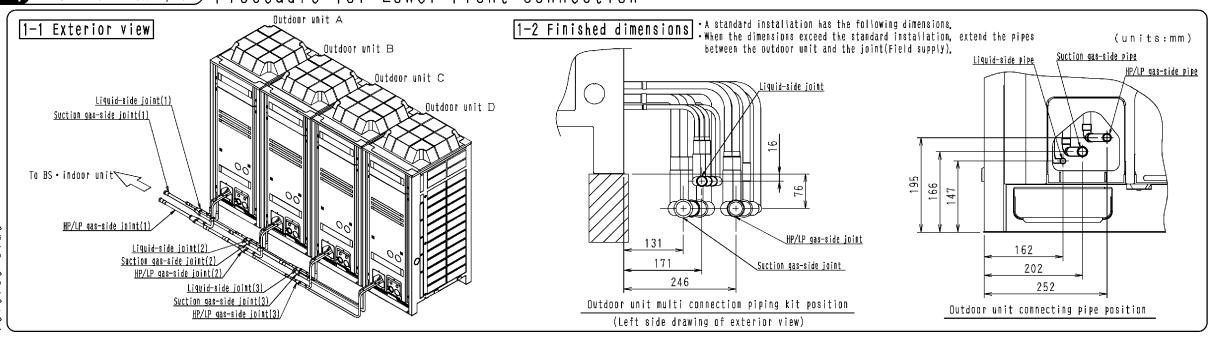

continue to reverse side

1P261551A

2-2 Connection of suction gas-side and HP/LP gas-side pipe

- Connect suction gas-side and HP/LP gas-side pipes as following procedure on the below figure.
- See (1-2 Finished dimensions) of (Installation examples) finished dimensions for the location (Height) of the joints.
- See the caution section in the Installation manual attached to the outdoor unit for brazing pipe.
- Install the joints so that an attached face of the caution label keeps horizontally. (See the view E)
- L type of reducer (1)(2) Connect vertical. (See the view E)
- Refer of connecting pipe size and location of cutting the joint・L type of reducer and Table 1 for location of cutting the joint and L type of reducer (1)(2).

■ Table 1

Suction gas-side		
L type of reducer(1)(outdoor unit A)	L type of reducer(1)(outdoor unit B)	L type of reducer(1)(outdoor unit C)
Connecting to suction gas-side pipe (Field supply) / Use cutting this position / Connecting to suction gas-side joint(1)	Connecting to suction gas-side pipe (Field supply) / Use cutting this position / Connecting to suction gas-side joint(2)	Connecting to suction gas-side pipe (Field supply) / Use cutting this position / Connecting to suction gas-side joint(3)
HP/LP gas-side		
L type of reducer(1)(outdoor unit A)	L type of reducer(1)(outdoor unit B)	L type of reducer(2)(outdoor unit C)
Connecting to HP/LP gas-side pipe (Field supply) / (No cutting) / Connecting to HP/LP gas-side joint(1)	Connecting to HP/LP gas-side pipe (Field supply) / (No cutting) / Connecting to HP/LP gas-side joint(2)	Connecting to HP/LP gas-side pipe (Field supply) / Use cutting this position / Connecting to HP/LP gas-side joint(3)

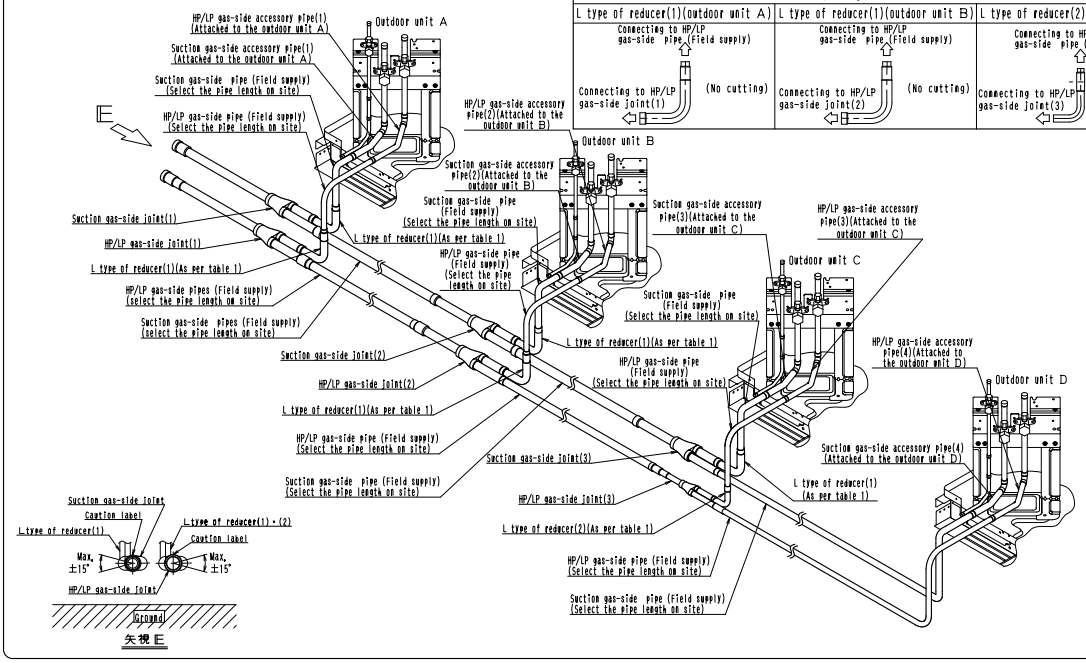

2-3 Connection of Liquid-side pipe

- Connect liquid-side pipe as following procedure on the right figure.
- See (1-2 Finished dimensions) of (Installation examples) finished dimensions for the location (Height) of the joints.
- See the caution section in the Installation manual attached to the outdoor unit for brazing pipe.
- Install the joints so that an attached face of the caution label keeps horizontally. (See the view F)
- L type of reducer (3) Connect vertical. (See the view F)
- Refer of connecting pipe size and location of cutting the joint・L type of reducer for location of cutting the joint. (L type of reducer(3)don't cut)

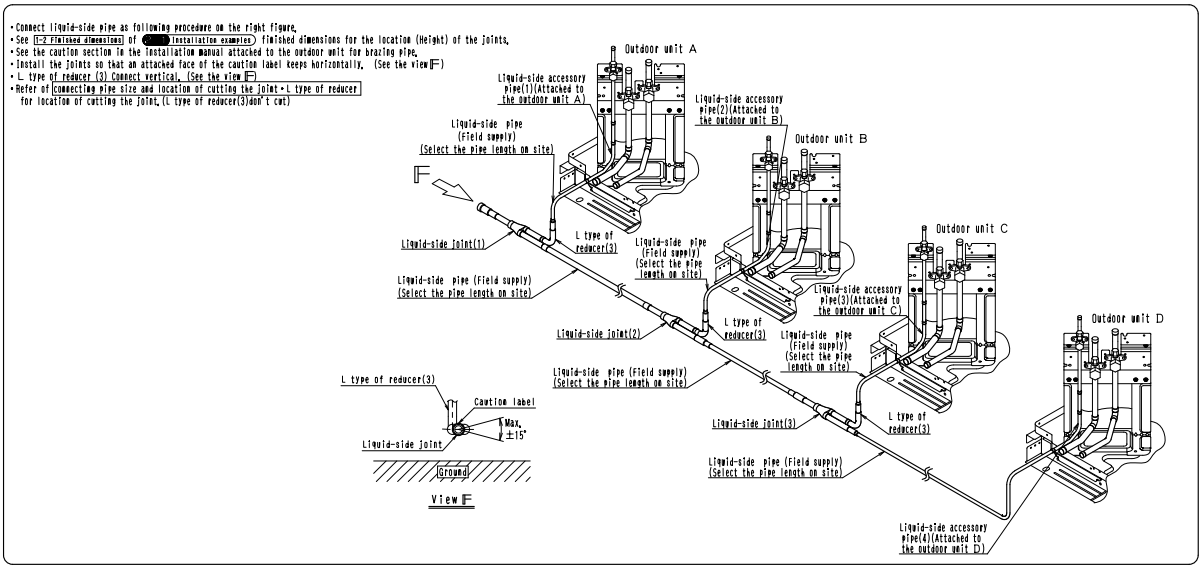

2-4 Insulation construction of joints

Follow the Instruction in the installation manual included with the outdoor unit, when performing insulation construction of joints after finished all of pipe construction and airtight test as following procedure on the below method.

Procedure for insulation construction of joints.
(See the figure at the right)

(1) Fit the insulating tube to the L type of reducer and temporarily keep it in place with tape. (Using the insulating tube)
For φ25.4 → The insulating tube(1).
For φ15.9 → The insulating tube(2)

(2) Fit the insulation to the joint and temporarily keep it in place with tape without leaving a gap between the insulation mating faces.

(3) Seal the seam between the insulation attached to the joint, the insulating tube (1)(2) and the field supply piping insulation with the field supply tape.

(4) Wrap the tape around the insulation attached to the joint and the insulating tube (1)(2) without leaving a gap.
(▨ section shown in the figure at the right.)

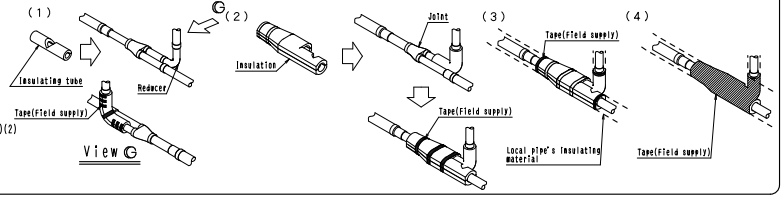

1P261552A

3-1 Installation examples Procedure for Bottom Connection

Caution This installation is only possible if there is enough space to perform brazing and racking underneath the outdoor unit.

1-1 Exterior view

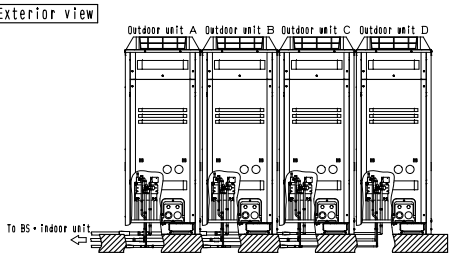

1-2 Finished dimensions

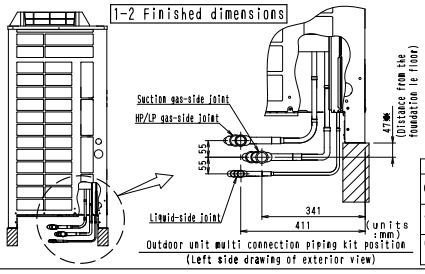

Caution

If central drain pan kit and a centralized vibration proof base are used, the dimensions marked with "✱" in the figure left will vary, so the length of connected pipe between outdoor unit and joint (field supply) adjust.

(units:mm)

Separately-sold Item also used	✱dimensions
Central drain pan kit	287
Vibration absorption stand	
Central drain pan kit and vibration absorption stand	

3-2 Connection of suction gas-side and HP/LP gas-side pipe

- Connect suction gas-side and HP/LP gas-side pipe as following the procedure on the right figure.
- See 1-2 Finished dimensions of 1-1 Installation examples for the location (height) of the joints.
- See the caution section in the Installation manual attached to the outdoor unit for brazing pipe
- Install the joints so that an attached face of the caution label keeps horizontally. (See the view H)
- Connect L type of reducer (1), (2) keeps horizontally. (See the view H)
- Refer of connecting pipe size and location of cutting the joint・L type of reducer and Table 1 for the cutting position of both joint and L type of reducer (1), (2).

■ Table 1

Suction gas-side		
L type of reducer(1)(outdoor unit A)	L type of reducer(1)(outdoor unit B)	L type of reducer(1)(outdoor unit C)
Connecting to suction gas-side pipe (Field supply) / Connecting to suction gas-side joint(1) / Use cutting this position	Connecting to suction gas-side pipe (Field supply) / Connecting to suction gas-side joint(2) / Use cutting this position	Connecting to suction gas-side pipe (Field supply) / Connecting to suction gas-side joint(3) / Use cutting this position
HP/LP gas-side		
L type of reducer(1)(outdoor unit A)	L type of reducer(1)(outdoor unit B)	L type of reducer(2)(outdoor unit C)
Connecting to HP/LP gas-side pipe (Field supply) / Connecting to HP/LP gas-side joint(1) / (No cutting)	Connecting to HP/LP gas-side pipe (Field supply) / Connecting to HP/LP gas-side joint(2) / (No cutting)	Connecting to HP/LP gas-side pipe (Field supply) / Connecting to HP/LP gas-side joint(3) / Use cutting this position

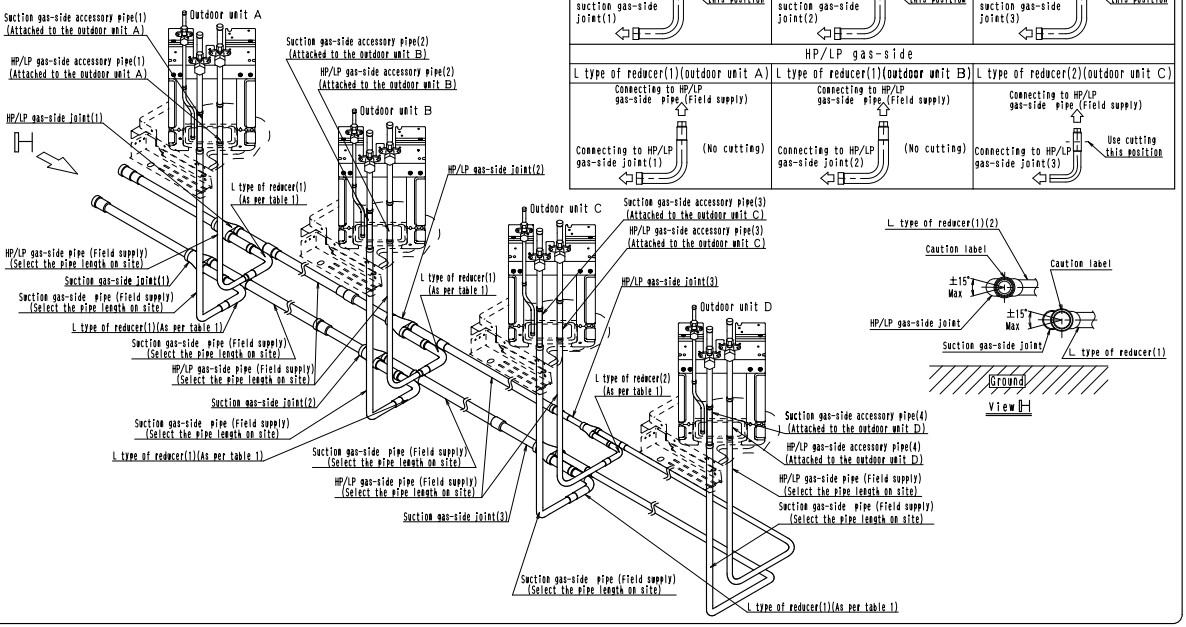

3-3 Connection of Liquid-side pipe

- Connect and liquid-side pipe as following the procedure on the right figure.
- See 1-2 Finished dimensions of 1-1 Installation examples for the location (height) of the joints.
- See the caution section in the Installation manual attached to the outdoor unit for brazing pipe
- Install the joints so that an attached face of the caution label keeps horizontally. (See the view J)
- Connect L type of reducer keeps horizontally. (See the view J)
- Refer of connecting pipe size and location of cutting the joint・L type of reducer for the cutting position of joint. (L type of reducer(3)don't cut)

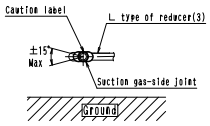

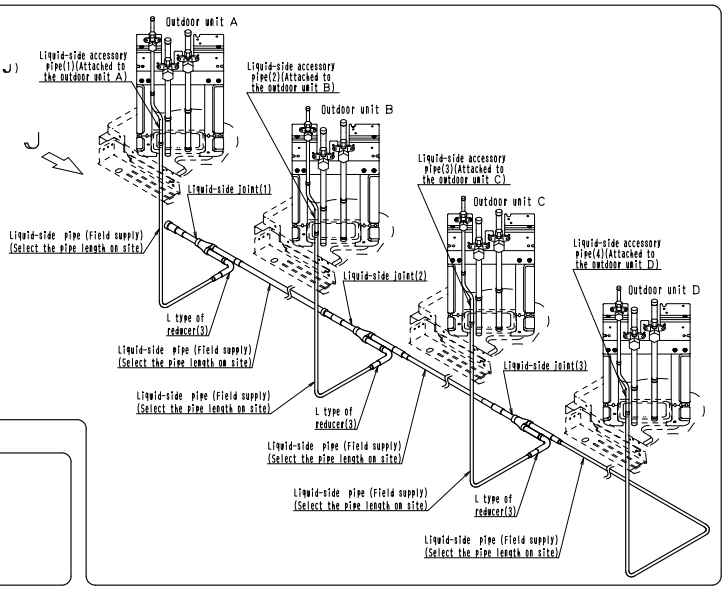

3-4 Insulation construction of joints

・See 1-4 Insulation construction of joints for a Lower front connection.

1P261552A

6. Pipe Size Reducer

6.1 KHRP26M73TP / 73HP

KHRP26M73TP

4

Installation Manual

■ THIS KIT INCLUDES THE FOLLOWING PARTS.

		PIPE SIZE REDUCER①	PIPE SIZE REDUCER②	PIPE SIZE REDUCER③
SHAPE				
QUANTITY	KHRP26M73TP	1pc.	1pc.	2pc.
	KHRP26M73HP	1pc.	———	1pc.

■ THIS KIT IS THE REDUCER OF THE BRANCH PIPING KIT(REFNET JOINT・HEADER).
CHECK THE PROPER MODEL OF THE BRANCH PIPING KIT.

KIT NAME	BRANCH PIPING KIT
KHRP26M73TP	KHRP26M73T(GAS SIDE)
KHRP26M73HP	KHRP26M73H(GAS SIDE)・KHRP25M73H(SUCTION GAS SIDE)

INSTALLATION PROCEDURE

REFER TO THE INSTALATION MANUAL OF THE BRANCH PIPING KIT.

■ JOINT SIZE ARE AS FOLLOWS.

PIPE SIZE REDUCER①	PIPE SIZE REDUCER②	PIPE SIZE REDUCER③
I.D φ41.3 O.D φ38.1 Field piping side	I.D φ41.3 O.D φ38.1 O.D φ31.8 Field piping side	I.D φ34.9 O.D φ31.8 Field piping side

(1)Select the field piping size according to the installation manual of the outdoor unit.
(2)Connect the PIPE SIZE REDUCER suitable for the field piping size to the branch piping kit.
ex.)Connect the reducers to the branch piping kit, KHRP26M73T.
・For inlet piping size is φ41.3 and outlet 1 piping size is φ34.9.

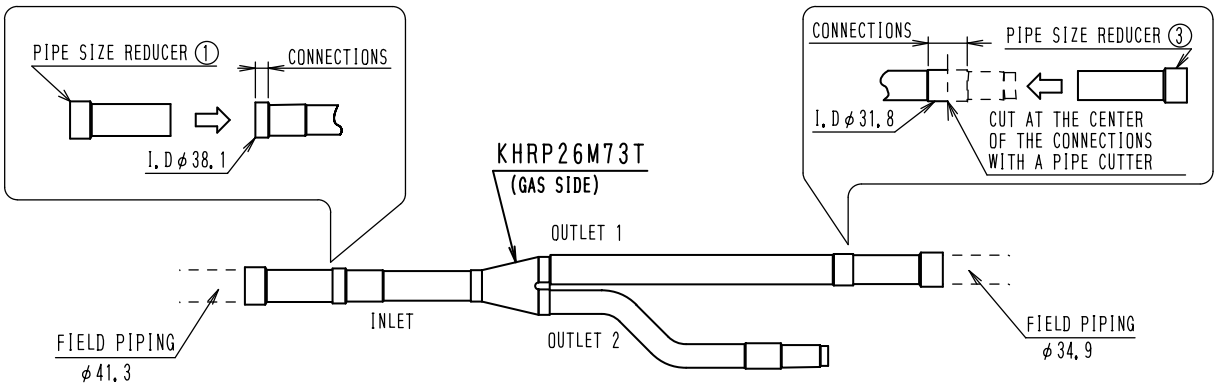

C: 3P113129B

6.2 KHRJ26K40TP / 40HP / 75TP / 76TP

KHRJ26K40TP

Installation Manual

■ THIS KIT INCLUDES THE FOLLOWING PARTS.

		PIPE SIZE REDUCER①	PIPE SIZE REDUCER②	PIPE SIZE REDUCER③	PIPE SIZE REDUCER④	PIPE SIZE REDUCER⑤
SHAPE						
QUANTITY	KHRJ26K40TP	1pc.	———	1pc.	———	———
	KHRJ26K40HP	———	———	1pc.	———	———
	KHRJ26K75TP	1pc.	1pc.	1pc.	———	———
	KHRJ26K76TP	1pc.	2pc.	1pc.	2pc.	1pc.

■ THIS KIT IS THE REDUCER OF THE BRANCH PIPING KIT(REFNET JOINT・HEADER).
CHECK THE PROPER MODEL OF THE BRANCH PIPING KIT.

KIT NAME	BRANCH PIPING KIT
KHRJ26K40TP	KHRJ26K40T(GAS SIDE)・KHRJ25K40T(SUCTION GAS SIDE)
KHRJ26K40HP	KHRJ26K40H(GAS SIDE)・KHRJ25K40H(SUCTION GAS SIDE)
KHRJ26K75TP	KHRJ26K75T OUTDOOR UNIT:24～34HP(GAS SIDE)
KHRJ26K76TP	KHRJ26K75T OUTDOOR UNIT:Not less than 36HP (GAS SIDE・・PIPE SIZE REDUCER①×1, ②×2, ③×1 , ④×2 / LIQUID SIDE・・PIPE SIZE REDUCER⑤×1)

INSTALLATION PROCEDURE

REFER TO THE INSTALATION MANUAL OF THE BRANCH PIPING KIT.

■ JOINT SIZE ARE AS FOLLOWS.

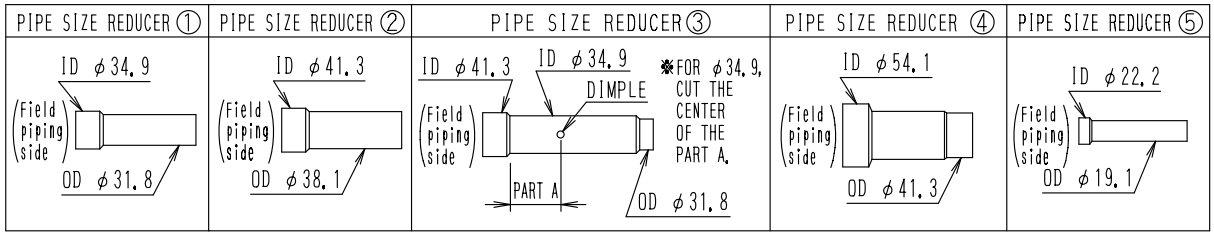

(1)Select the field piping size according to the installation manual of the BRANCH PIPING KIT.
(2)Connect the PIPE SIZE REDUCER suitable for the field piping size to the branch piping kit.
ex.)Cnnect the reducers to the branch piping kit,KHRJ26K75T.
・For inlet piping size is φ41.3 and outlet 1・2 p1iping size are φ34.9.

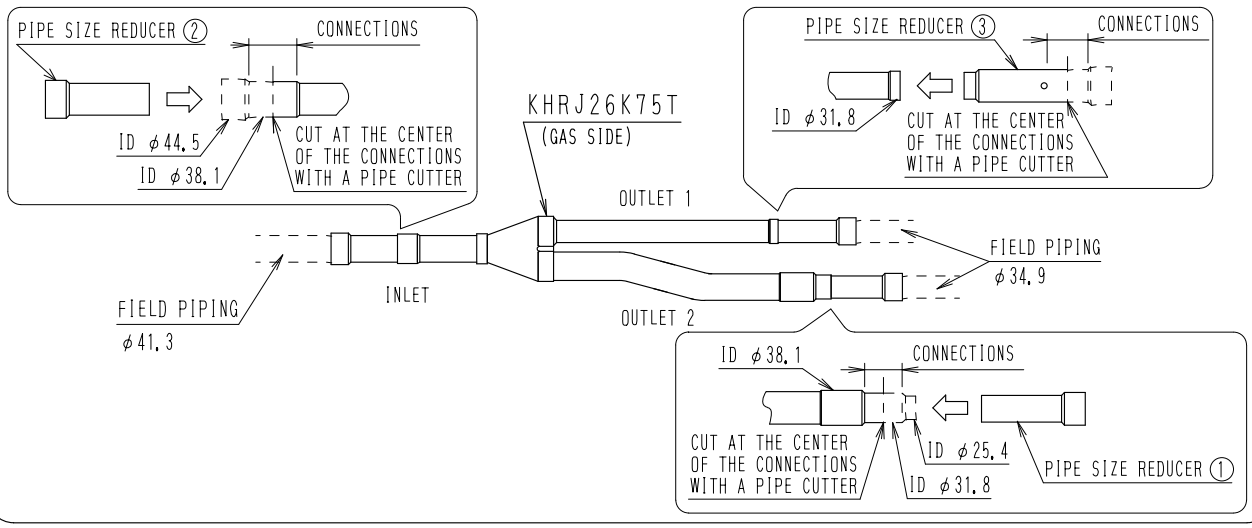

C: 3P234465

7. Auxiliary Pipe Kit

7.1 KHFP22B8 / 10 / 12 / 16 / 18P

Installation Manual

DAIKIN Air conditioner Sold separately **Auxiliary pipe kit** Installation manual

KHFP22B8 • 10 • 12 • 16 • 18P

Make sure to read bafore installation and follow the instructions carefully when performing installation work.
Refer to the installation manual that comes with the outdoor unit.

4

Kit names Confirm the kit name and outdoor unit capacity.

Kit names	Outdoor unit capacity	Kit names	Outdoor unit capacity
KHFP22B8P	8HP type	KHFP22B16P	14,16HP type
KHFP22B10P	10HP type	KHFP22B18P	18HP type
KHFP22B12P	12HP type		

Components This kit contains following parts. Confirm the following parts are included.

Part names	Gas side pipe(1)	Gas side pipe(2)	Gas side pipe(3)	Liquid side pipe(1)	Liquid side pipe(2)	Others
Q'ty	1	1	1	1	1	1
Parts		(Long)			(Short)	• Installation manual

Installation procedure

To the piping installer

Do not use flux when brazing the refrigerant piping. Use the phosphor copper brazing filler metal(BCuP-2 : JIS Z 3264/B-Cu93P-710/795 : ISO 3677)which does not require flux. (Flux has extremely harmful influence on refrigerant piping system. For instance, if the chlorine based flux is used, it will cause pipe corrosion or, in particular, if the flux contains fluorine, it will damage the refrigerant oil.)

- Connecting refrigerant piping to outdoor units.
- In case of multi system, The Outdoor unit multi connection piping kit(sold separately) is needed when connecting piping between outdoor unit.
  Refer to the installation manual that comes with the kit when doing this piping work.

If connected to the front Remove the shutoff valve cover to connect.

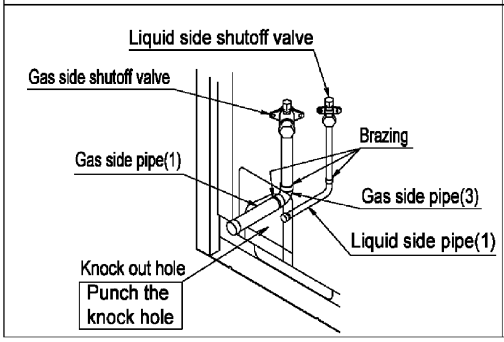

When connected at lateral side (bottom). Remove the knock hole on the bottom frame and route the piping under the bottom frame.

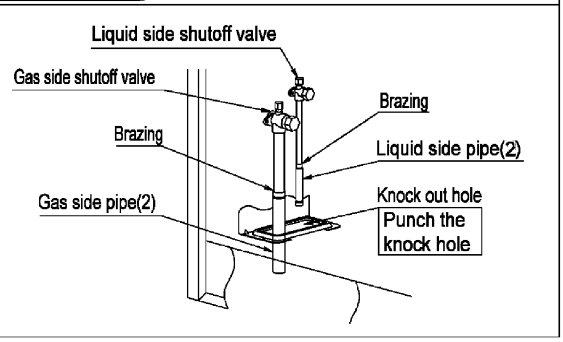

< Note >
- Make sure the onsite piping does not come into contact with other piping or bottom frame or side panels of the unit.

- Be sure to perform nitrogen permutation or nitrogen blow when brazing. (Refer to below figure)
  Brazing without performing nitrogen permutation or nitrogen blow into the piping will create large quantities of oxidize film on the inside of the piping, adversely affecting valves and compressors in the refrigerating system and preventing normal.
- The pressure regulator for the nitrogen released when doing the brazing should be set to 0.02 MPa(about 0.2 kg/cm^2 : Enough to feel a slight breeze on your check).

< Note >
Do not use anti-oxidants when brazing the pipe joints.
Residue can clog pipes and break equipment.

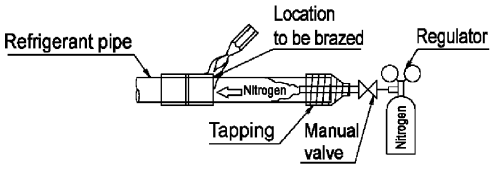

3PN14085A

8. Closed Pipe Kit

8.1 KHFP26A100C

Installation Manual

CLOSED PIPE KIT INSTALLATION MANUAL KHFP26A100C

■ This kit includes the following parts.

Name	Closed pipe of Gas pipe side	Closed pipe of Liquid pipe side	Insulation tube (Gas pipe side)	Insulation tube (Liquid pipe side)
Quantity	1 pc.	1 pc.	1 pc.	1 pc.
Shape	φ15.9mm (φ5/8 inch)	φ9.5mm (φ3/8 inch)		

■ This closed pipe kit is designed for the centralized BS units.
Use this kit when the indoor units are fewer than branches of the centralized BS unit (in case of a branch remains).

〈NOTE〉

- The number of branches where the indoor unit is not connected is up to two places each refrigerant circuit , and up to one place each centralized BS unit.
- Don't use this closed pipe kit for the branch that is the furthest from three piping side of the centralized BS unit. (※See below)

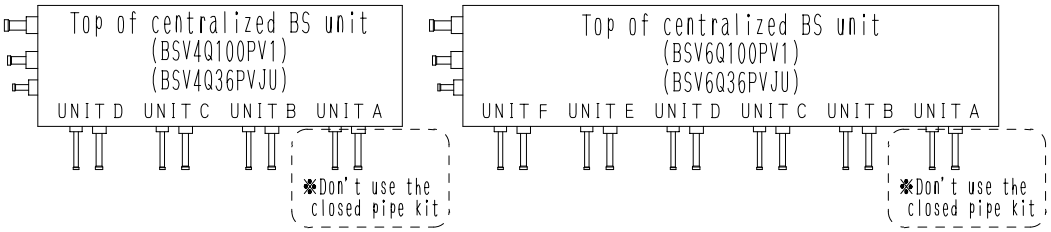

INSTALLATION PROCEDURE

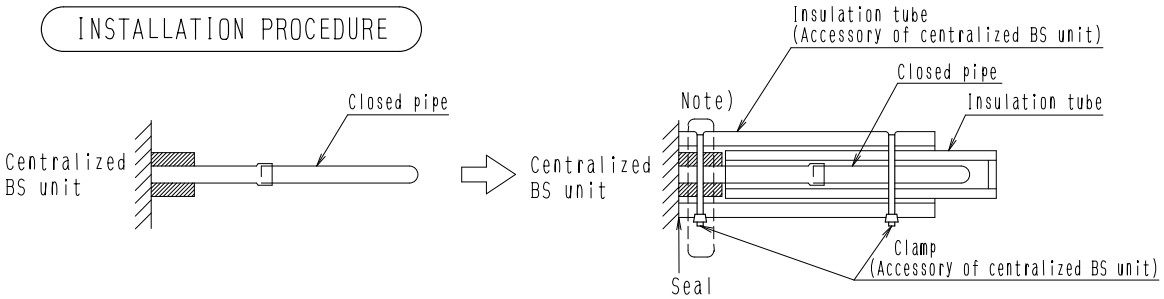

Connect the closed pipe kit to the branch not used.

Insulate the closed pipe with insulation tube attached to this kit, and additionally insulate it with insulation tube attached to centralized BS unit.

Note) Clamp at the position of the insulation tube of the centralized BS unit.

<INSULATION INSTALLATION PRECAUTIONS>

1. Seal so that air cannot be in and out of the end.
2. Do not over-tighten the clamp so as to maintain the insulation thickness.
3. Be sure to attach the insulation tube(Accessory of centralized BS unit) with the seam facing up. (See the right figure.)

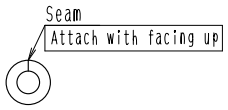

3P251484A

9. Central Drain Pan Kit

9.1 KWC26B160 / 280 / 450(E)

KWC26B160

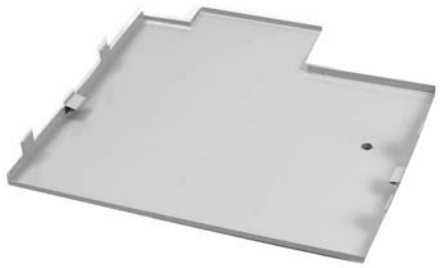

Dimensions Unit (mm)

Model	AA
KWC26B280(E)	930
KWC26B450(E)	1240

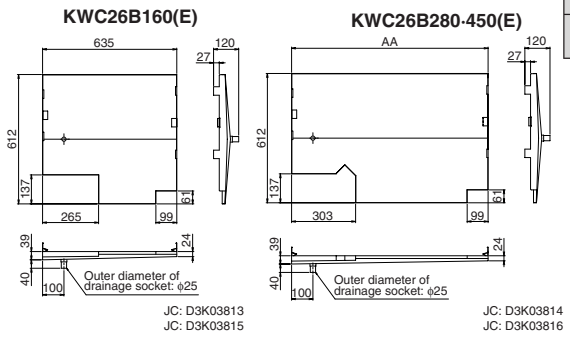

Item	Model	KWC26B160(E)	KWC26B280(E)	KWC26B450(E)
Material		Hot-dip zinc-coated carbon steel sheet for painting		
Casing colour	Without(E)	Ivory (5Y7.5/1)		
	With(E)	Light Camel (2.5Y6.5/1.5)		
Mass	kg	4.0	5.5	7.0

Installation Manual

Attention when this kit is installed, please make the foundation into the independent or the beam foundation.

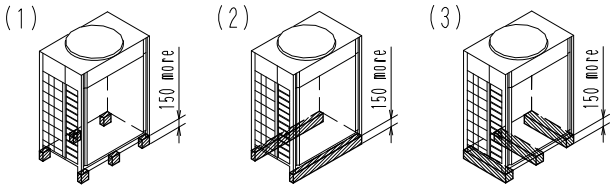

※ Confirm the Installation space.

Installation space when this kit is installed the following installation space is necessary for left-right either of the body.

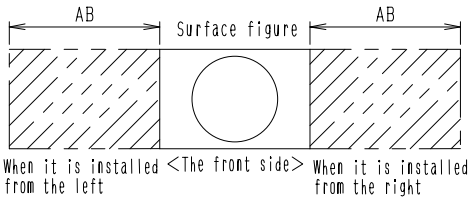

	AB
KWC26B160(E)	685
KWC26B280(E)	980
KWC26B450(E)	1290

Note
1. When lower piping constraction has already been carried out this kit can be attached onry from right side.
2. When the foundation is the beam foundation of the direction of order, this kit can be attected only from left side.

(1) Preparation for installation Remove a left-right protection net of the outdoor unit.

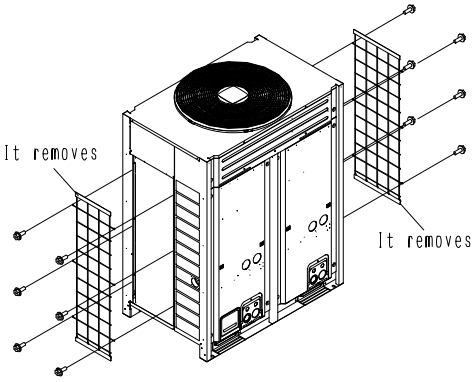

JC: 3K013853

(2) Installation point

1. Please turn the A section of this kit to the front, and outdoor unit bottom frame arrange under an outdoor unit bottom frame.

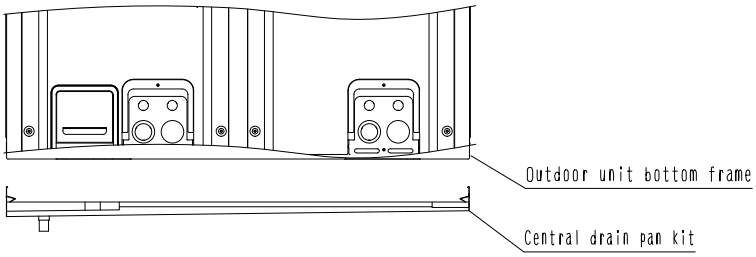

2. Hook the hook part of this kit on an outdoor unit bottom frame.

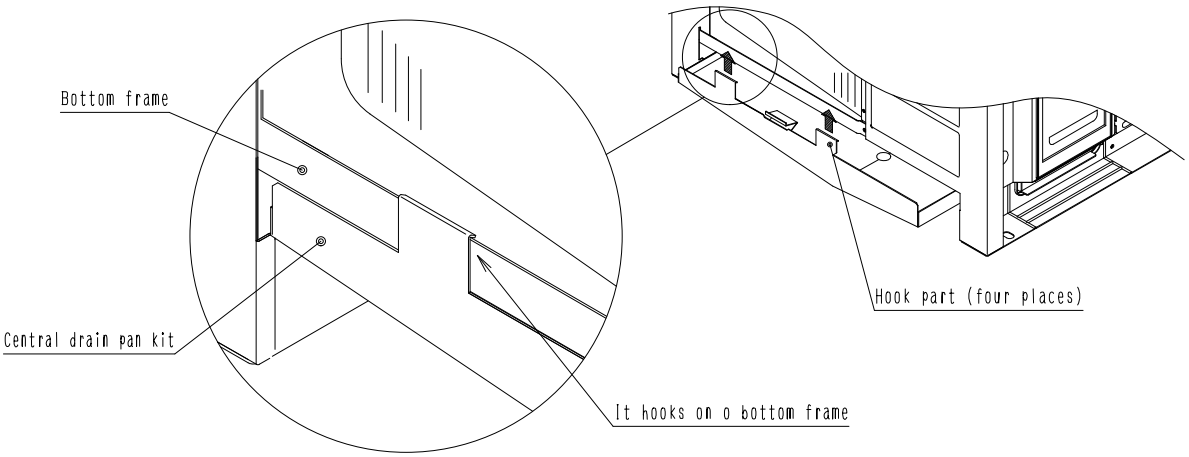

3. Attach protective netting of an outdoor whit as before, It is the completion of work.

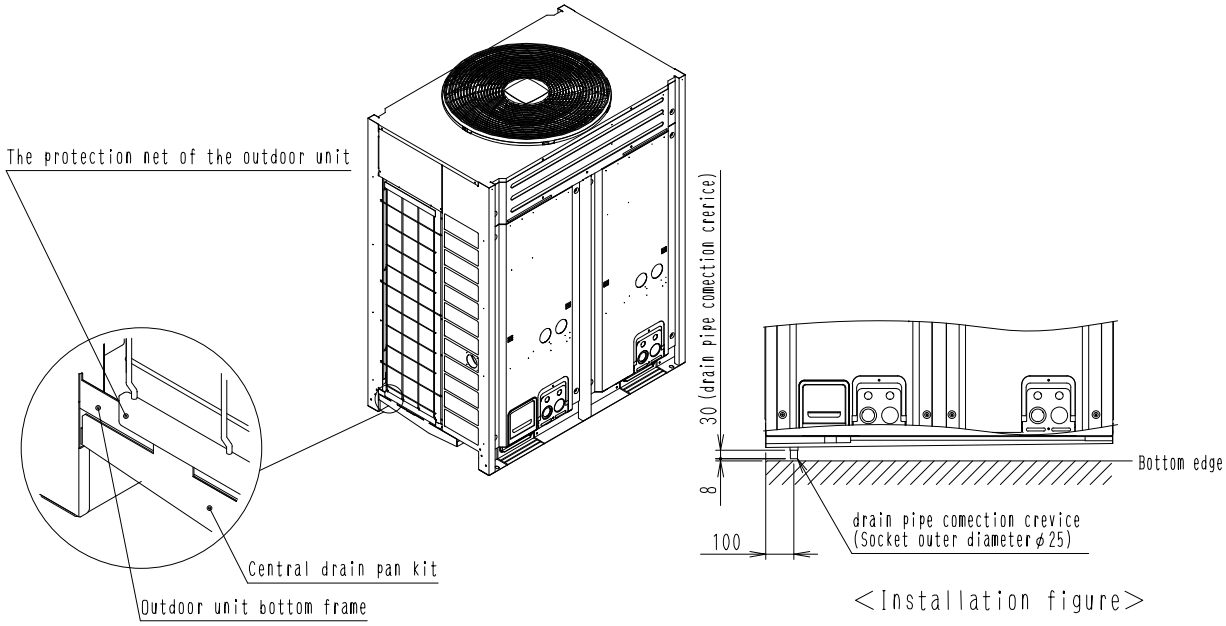

<Installation figure>

JC: 3K013853

9.2 KWC26C160 / 280 / 450(E), KWC25C450

KWC26C160

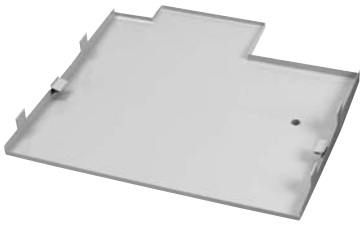

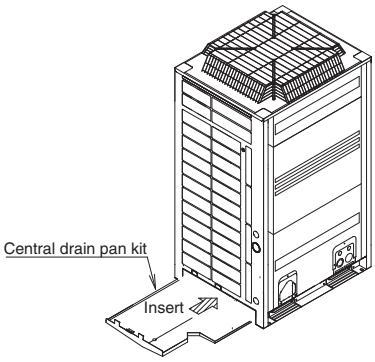

Dimensions Unit (mm)

Model	AA
KWC26C280	930
KWC26C450	1240

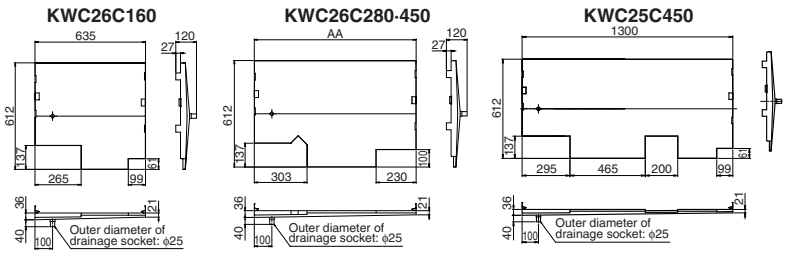

JC: D3K05258A
JC: D3K05260A

JC: D3K05259A
JC: D3K05261A

JC: D3K06009

Item / Model		KWC26C160	KWC26C280	KWC26C450	KWC25C450
Material		Hot-dip zinc-coated carbon steel sheet for painting			
Casing colour	Without(E)	Ivory (5Y7.5/1)			
	With(E)	Light Camel (2.5Y6.5/1.5)			–
Mass	kg	4.0	5.5	7.0	7.1

Installation Manual

Components

Name		① Collective Drainage Pan Kit		
Outline		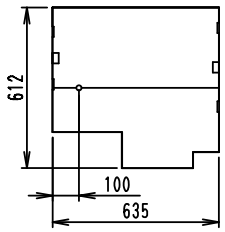	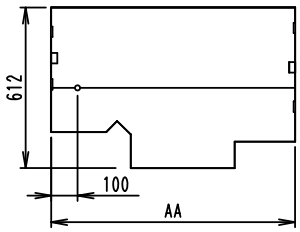	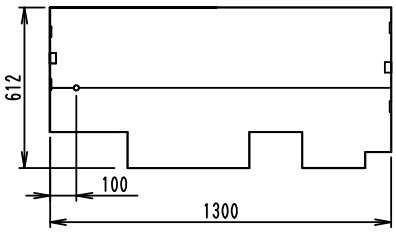
Qty	KWC26C160(E)	1	—	—
	KWC26C280(E)	—	1	—
	KWC26C450(E)	—	1	—
	KWC25C450(E)	—	—	1

	AA
KWC26C280(E)	930
KWC26C450(E)	1240

Note In order to install this kit, the outdoor unit needs to have the beam or independent base.

(1) Beam base (2) Independent base

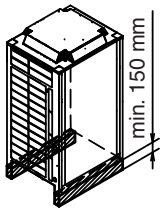

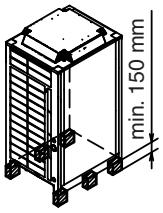

* Check the Installation before installation.

Installation In order to install this kit, the outdoor unit needs to have a mounting space as shown in the figure below on either right or left side.

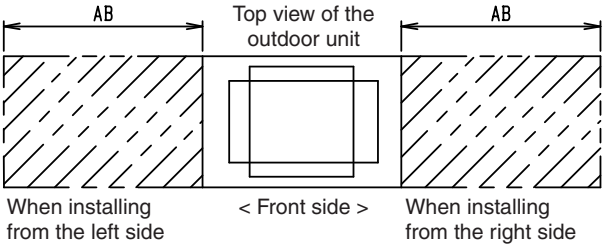

	AB
KWC26C160(E)	685
KWC26C280(E)	980
KWC26C450(E)	1290
KWC25C450(E)	1350

Notes:

1. This kit can be installed only from the right side when the under-floor piping has been provided already.
2. This kit can be installed only from the left side when the conduit has been provided already.

JC: 3K017824A

1 Mounting Procedures

1. Place the kit below the outdoor unit's bottom frame so that the cutout part of the kit is on the front side.

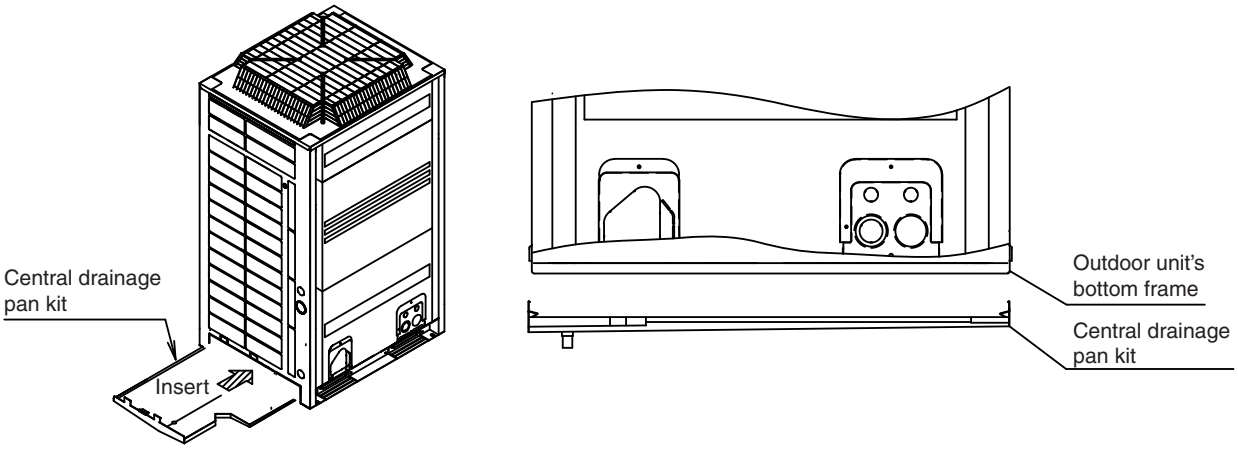

2. Apply the tabs of the kit to the sockets on the outdoor unit, and then push up the kit until the tabs are securely held by the bottom frame.

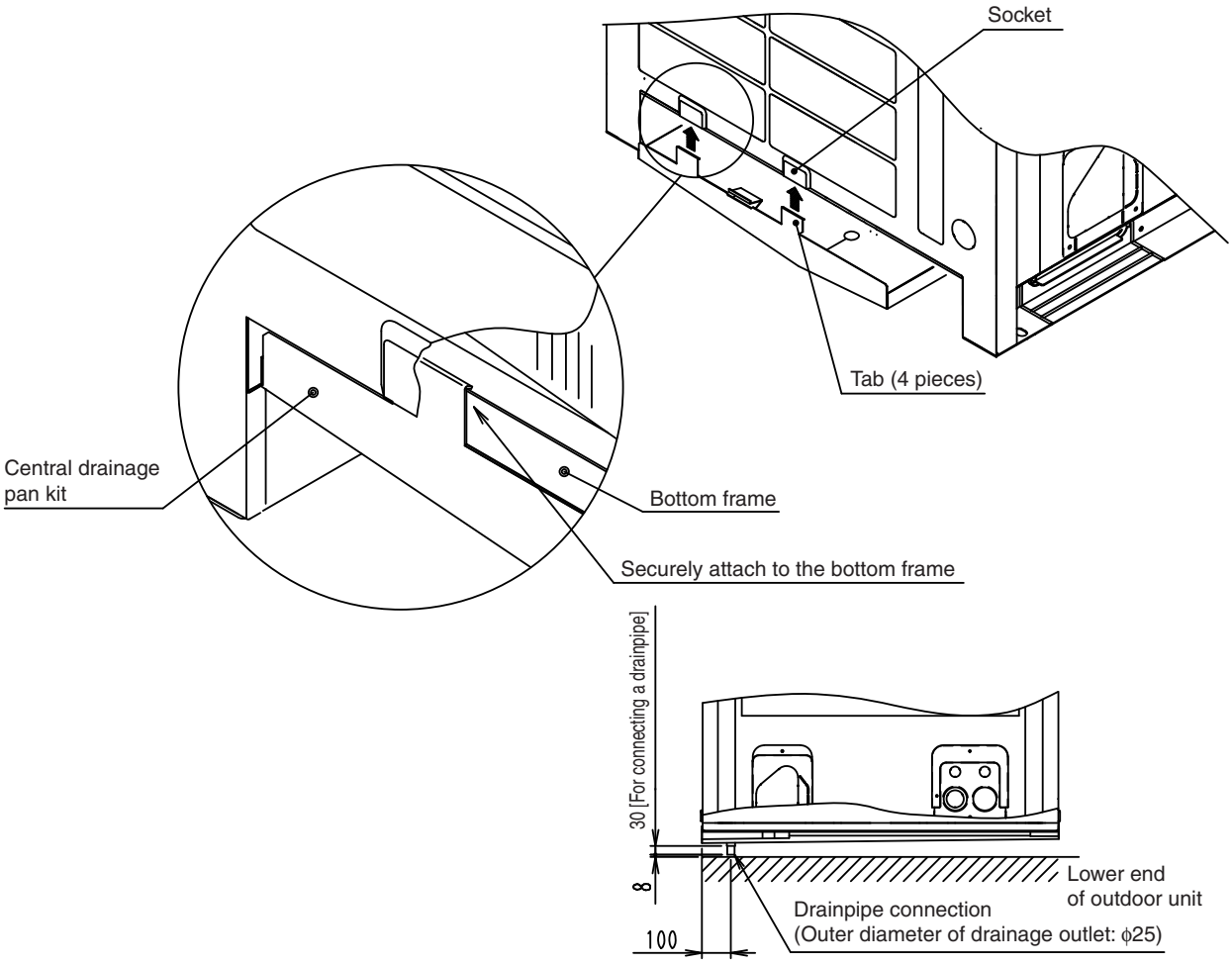

< View of Installed Kit >

JC: 3K017824A

10. Central Drain Plug

10.1 KKPJ5F180

KKPJ5F180

Dimensions Unit (mm)

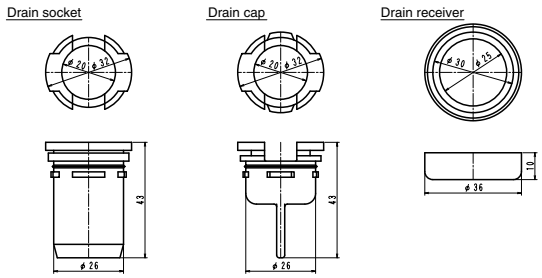

J: D3K1342A

Item \ Model	KKPJ5F180
Connecting drain hose	φ25 (inside diameter)

Installation Manual

DAIKIN Air Conditioners 3P066795-1B

Central Drain Plug Installation Manual <KKPJ5F180>

■ Use this plug to connect a drain hose to dispose the drain from the outdoor unit.

1 Before Installation Check that this Kit contains the following parts.

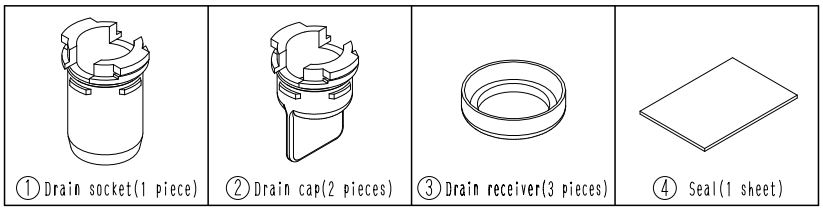

2 Installation Procedure

・Please refer to the installation manual of outdoor unit.

1. Insert drain receiver③ onto drain socket① and drain cap② beyond 4 projections around drain socket and drain cap.
   Refer to a right picture(Note:2)

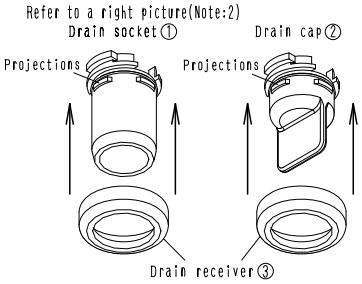

2. Insert drain socket and drain caps into their matching drain hole;Drain socket① into drain hole B and drain caps② into drain hole C and D. After insertion, turn them about 40° clockwise.

Note:1
Be sure not to insert them into wrong drain holse, or there causes water leakage.

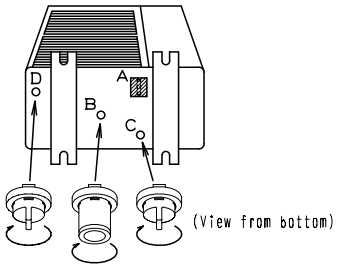

Note:2
Please check whether drain receiver③is caught in four projections of drain socket①and drain cap②correctly.
It will become the cause of the leak they are not attached correctly.

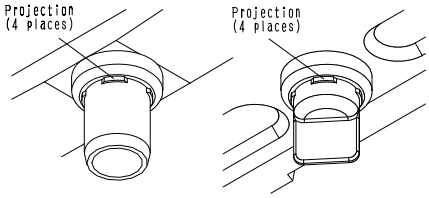

3. Connect vinyl hose on the market(intemal diameter of 25mm) to drain socket①.
   (If the house is too long and hangs down, fix it carefully to prevent the kinks.)
4. Affix seals④ to part A as shown on the above drawing.
   (It is unnecessary when it is the model which does not have opening in A.)
5. After join drainsocket①and draincap②, please check whether there is not any leak to A and the other parts by pouring water.

Note:3
1. If the drain holes of the outdoor unit are covered with the mounting bracket or the floor, raise the unit to provide the space of more than 100mm under the leg of the outdoor unit.
2. Do not use this option in the cold latitudes.
   At bottom frame, drained water is frozen up.

3P066795B

11. Wire Fixture for Preventing Overturning

11.1 K-KYZP15C

K-KYZP15C

Item Model		K-KYZP15C
Accessories		Adjuster pin: 1 piece Bolt, nut, plain washer: 1 set Installation manual.
Mass	kg	1.0

4

Dimensions Unit (mm)

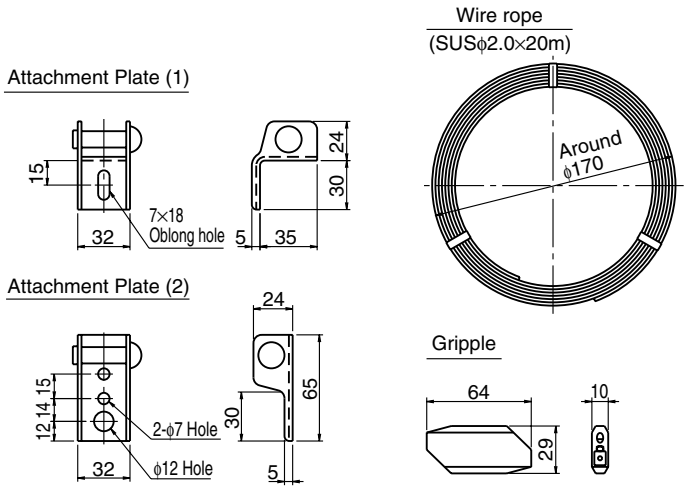

J: D3K2523

■ **Parts**

Part	Attachment plate (1)	Attachment plate (2)	Wire rope	Gripple	Adjustor pin	Hexagonal Bolt	Hexagonal Nut	Plain washer	Tapping screw
Shape	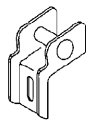	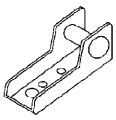				M10×25	M8·10 W5/16·3/8	for M8·10	M5×12
K-KYZP15C	4	4	1 roll	4	1	4	4 each	4 each	4

C: 3K07319A

Installation

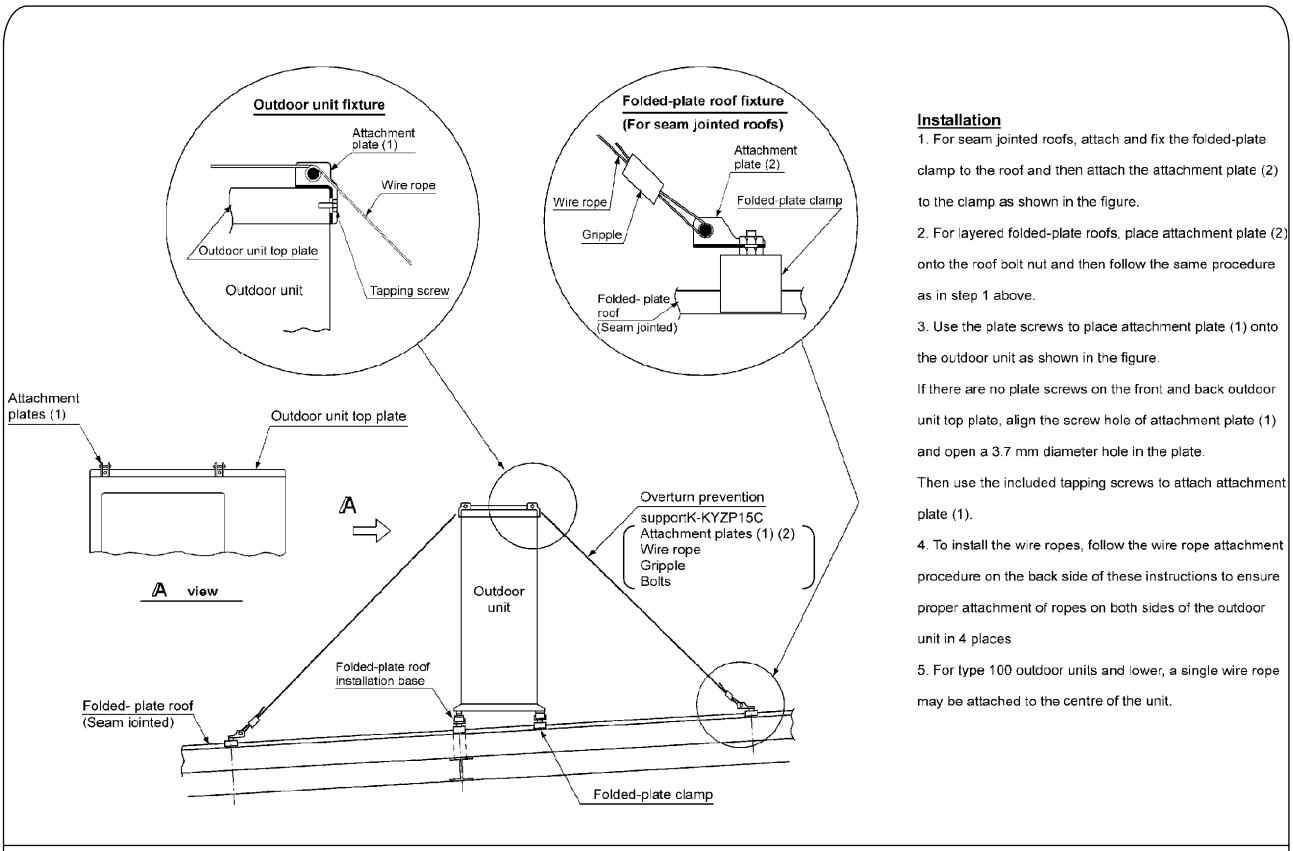

Installation

1. For seam jointed roofs, attach and fix the folded-plate clamp to the roof and then attach the attachment plate (2) to the clamp as shown in the figure.
2. For layered folded-plate roofs, place attachment plate (2) onto the roof bolt nut and then follow the same procedure as in step 1 above.
3. Use the plate screws to place attachment plate (1) onto the outdoor unit as shown in the figure.
   If there are no plate screws on the front and back outdoor unit top plate, align the screw hole of attachment plate (1) and open a 3.7 mm diameter hole in the plate.
   Then use the included tapping screws to attach attachment plate (1).
4. To install the wire ropes, follow the wire rope attachment procedure on the back side of these instructions to ensure proper attachment of ropes on both sides of the outdoor unit in 4 places
5. For type 100 outdoor units and lower, a single wire rope may be attached to the centre of the unit.

Wire rope attachment procedure

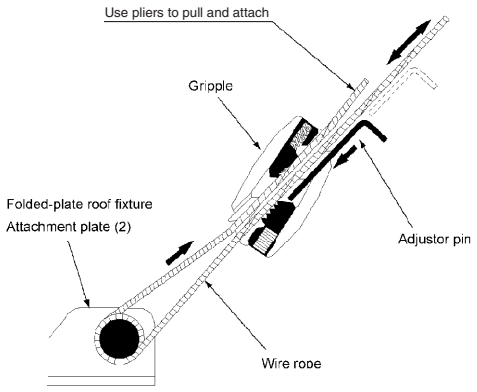

C: 3K07319A

12. Fixture for Preventing Overturning

12.1 KPT-60B160

KPT-60B160

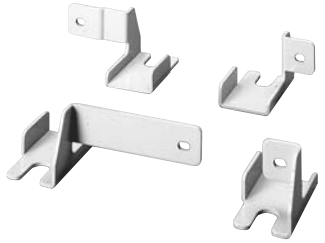

Item \ Model	KPT-60B160
Material	Steel plate (t 3.2)
Colour	Ivory white
Accessories	Screw : 4 Installation manual.

- Allows the outdoor unit to be secured to the foundation.
  →Prevents tipping of the outdoor unit due to strong gusts.
- Useful for locations where anti-tipping wires (Locally procured) cannot be installed.

Dimensions Unit (mm)

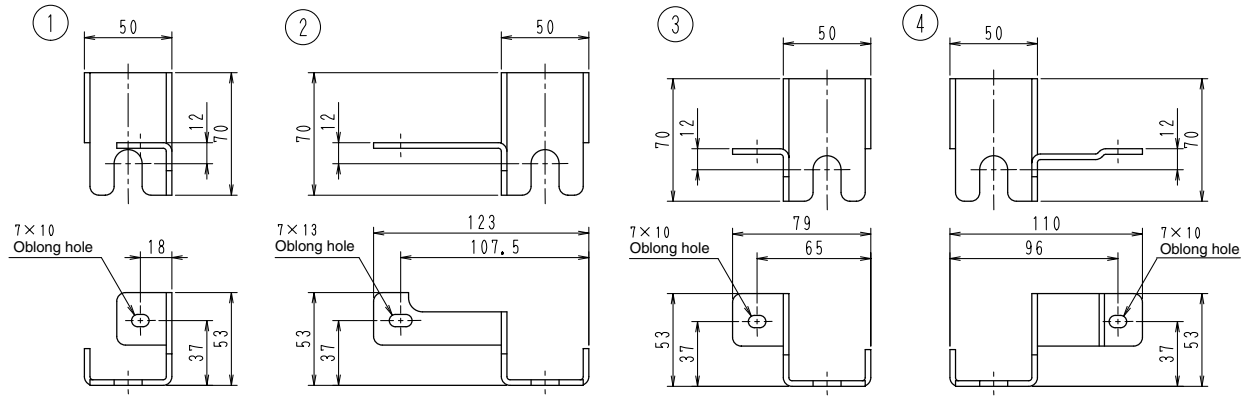

J: D3K2759A

Installation Manual

(1) Check that this kit contains the following parts.

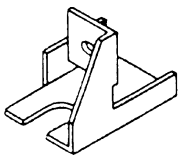	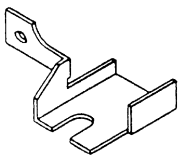	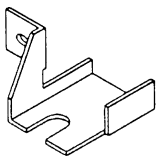	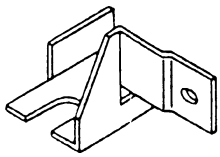	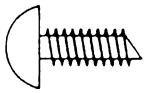
Metal fixture ①	Metal fixture ②	Metal fixture ③	Metal fixture ④	Screws (4 pieces)

(2) Installation Procedure

1. Install the metal fixtures ① ~ ④ to the base legs as shown below.

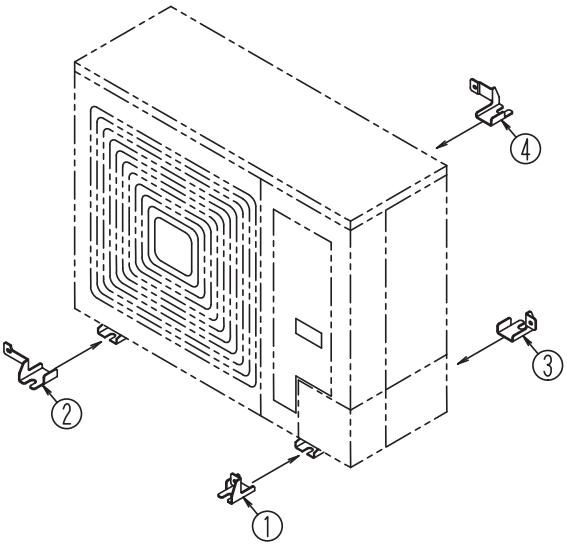

2. Remove the screw from the casing and fix the metal fixture to the casing.

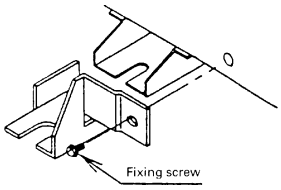

Note:
When you install the metal fixtures ①, ③ and ④, fix the metal fixture through the casing by the screws M5×13 attached.

When you install the metal fixture ②, fix the metal fixture through the casing by the screw M5×13 attached. However, remove the screw on the casing, if the screw of the casing will contact with metal fixture.

3. Fix the metal fixtures firmly by the anchor bolts. (The anchor bolts, nuts and washers should be M12 type sold on the market.)

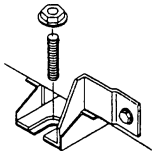

J: 3K07893

13. Refrigerant Pipe Filter Kit

13.1 BHF26A450F

Dimensions Unit (mm)

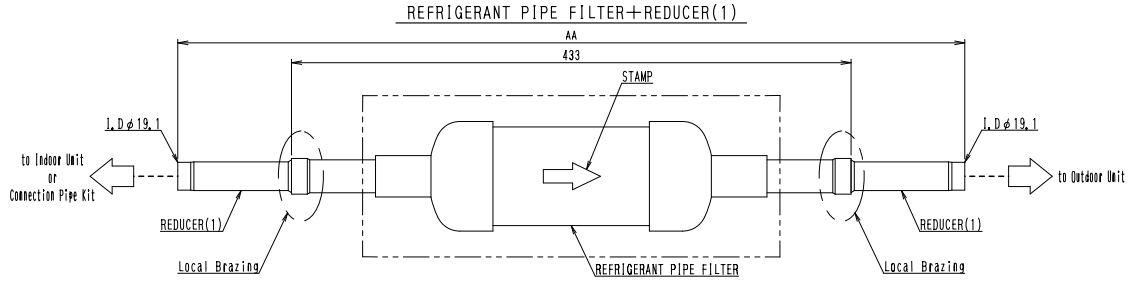

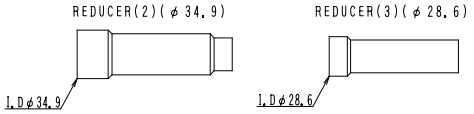

REDUCER	AA
(1)(ID φ 19.1)	609
(2)(ID φ 34.9)	649
(3)(ID φ 28.6)	609

NOTE)1. "------" in the figure show field supply piping.
2. About size of connection pipe refer the "engineering data.
3. In case of install this kit observe follow conditiones.
- For each outdoor unit, 1 set of this kit shall be installed respectively.
- This kit shall be installed on the gas side pipes in-between indoor and outdoor units. (It is not effective even if installs the liquid side pipes and oil pipes.) For outdoor unit multi-connecting systems, install in-between gas side joimt of connecting pipe kit and outdoor unit.(Refer to Fig.1) Improper installation may lead to malfunction of the outdoor unit.
- Direction of the arrow in this filter kit shall be from indoor unit → outdoor unit. Also filter must be installed in level.(Refer to Fig.2)

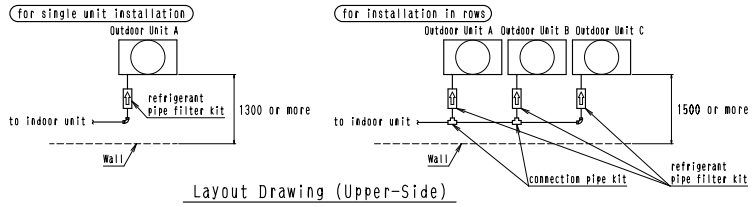

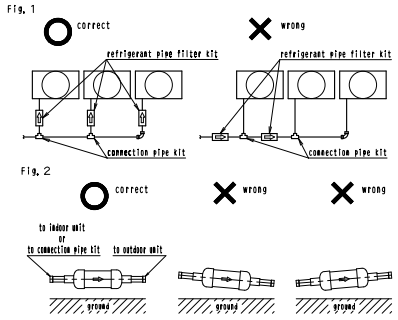

Accessory
REFRIGERANT PIPE FILTER : 1
REDUCER (1) : 1
REDUCER (2) : 1
REDUCER (3) : 1
INSULATION FOR REFRIGERANT PIPE FILTER : 1
INSTALLATION MANUAL

3D061740

Installation Manual

Components ■This Kit contains the following parts. Confirm the following parts are included.
<Do not throw away any of the parts until installation is complete.>

Parts Names	refrigerant pipe filter	insulation for refrigerant pipe filter	reducer (1)	reducer (2)	reducer (3)
Parts	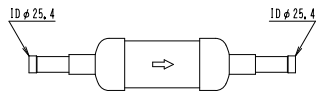	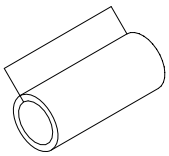	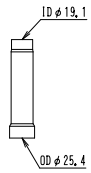	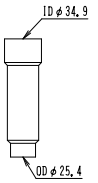	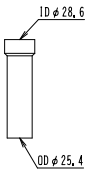
Q'ty	1	1	2	2	2

Field supply parts ■The following parts are needed to connect this kit and are not included.

Parts Names	Q'ty	Selection Procedure
insulation for pipes	1 set	See Table 1, 2 of ❶ Connection of Refrigerant Pipe Filter Kit for the required sizes.
connection pipes		
elbows		
reducing socket (only for RX(Y)Q~type)	2 pcs.	
tapes	1 set	(for sealing insulation)

Restrictions On Installing Refrigerant Pipe Filter Kit

⚠To the piping installer When installing this kit, please apply the following restrictions.

- For each outdoor unit, 1 set of this kit shall be installed respectively.
- This kit shall be installed on the gas side pipes in-between indoor and outdoor units.(It is not effective even if installs the liquid side pipes and oil pipes.)
  For outdoor unit multi-connecting systems, install in-between gas side joint of connecting pipe kit and outdoor unit.(Refer to Fig.1)
  Improper installation may lead to malfunction of the outdoor unit.
- Direction of the arrow in this filter kit shall be from indoor unit → outdoor unit.
  Also filter must be installed in level.(Refer to Fig.2)

Caution
- For installation of outdoor units, please see the installation manual attached to the outdoor unit.
  But sizes of the required space examples on the installation manual attached to the outdoor unit cannot be applied for installation of this kit.
  Tis kit should be installed to leave sufficient space at the front.
  Typical required space of Installation Examples show Installation Examples.
- For installation of the outdoor unit multi connection pipe kit, see the installation manual attached to the outdoor unit multi connection pipe kit.

Fig. 1

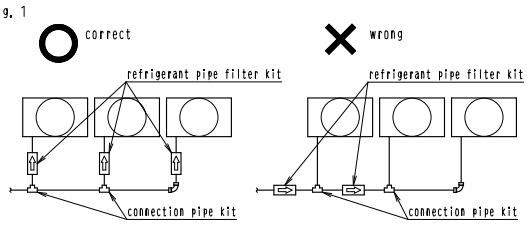

Fig. 2

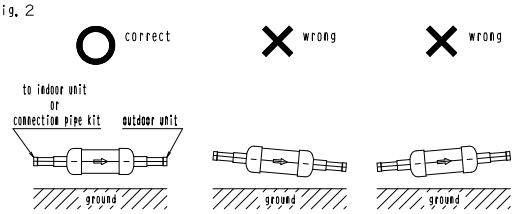

Installation Examples
- The figure at the lower shows a typical front connection.
  Make sure to follow the installation restrication and carry out installation taking the field requirements into consideration.
- This manual explains the front connection <Ex. of construction 1>.

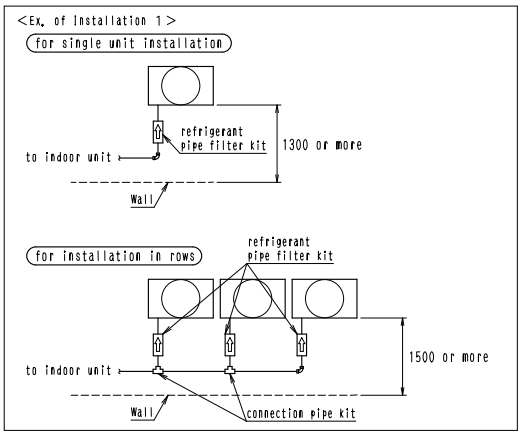

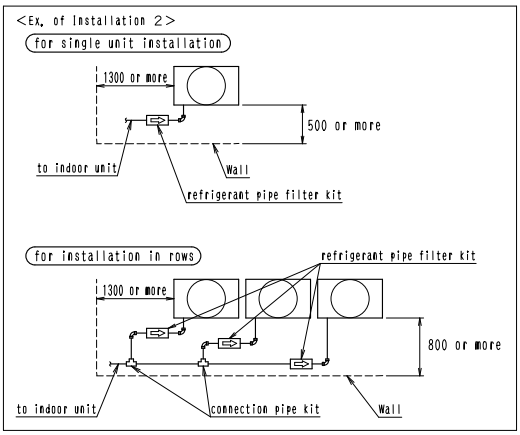

1P229846A

Installation Procedures of Refrigerant Pipe Filter Kit

❶ Connection of Refrigerant Pipe Filter Kit

Connection method only for the gas side pipes is shown on this manual. For the other pipes connection method, please see the installation manual either attached to the outdoor unit or the outdoor unit multi connection pipe kit.

①Select pipe sizes of reducer and gas side pipes (field supply) from Table 1 according to outdoor unit capacity.
②Cut gas side pipes (field supply) in the length specified on Table 1.
③Connect pipes according to the figure shown on the right, then braze the connection.
Caution ●Direction of the arrow in this filter kit shall be from indoor unit → outdoor unit. Also fix both edges of the filter with supports.
④Connect liquid side pipes and oil pipes (only for RX~M type multi-connecting systems.)
●For connection of liquid side pipes and oil pipes, please see the installation manual either attached to the outdoor unit or the outdoor unit multi connection pipe kit.

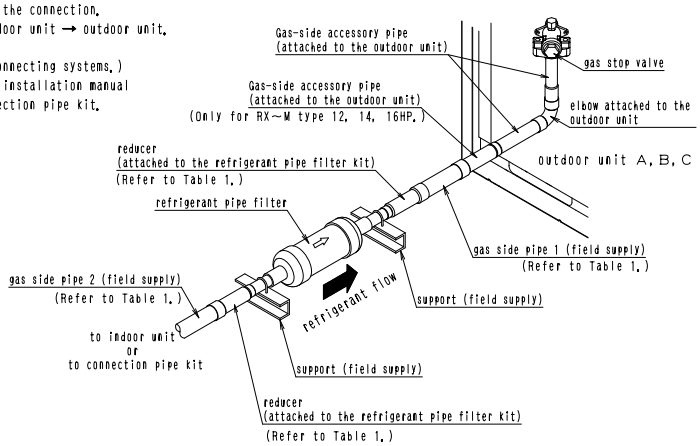

Finished Dimensions

- Dimension A & B are for standard installation.
- If changes of the sizes for standard installation required, make adjustments on the gas side pipes (field supply) according to Table 1.
- Sizes of gas side pipe 2 for outdoor unit C on Table 1 are the sizes when elbow (field supply) sizes are as Table 2. If the dimension C is different, make adjustments according to Table 1 & 2.

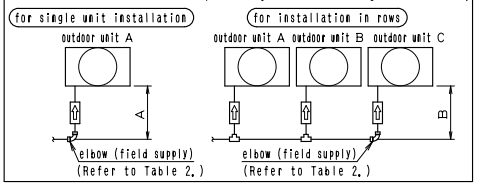

■Table 1

RX~M type

Outdoor Unit Capacity	sizes of gas side pipes (field supply)							reducers to be used	dimension A (finished dimension for single unit installation)	dimension B (finished dimension for installation in rows)
	outside dia.	outdoor unit A		outdoor unit B		outdoor unit C				
		gas side pipe 1	gas side pipe 2	gas side pipe 1	gas side pipe 2	gas side pipe 1	gas side pipe 2			
5HP	φ19.1	100mm	100mm	——	——	——	——	reducers (1)	858mm	——
8, 10HP	φ28.6	120mm	120mm	120mm	123mm	120mm	332mm	reducers (3)	895mm	1107mm
12, 14, 16HP	φ34.9	120mm	120mm	120mm	123mm	120mm	319mm	reducers (2)	1016mm	1215mm

RX(Y)Q~ type

Outdoor Unit Capacity	sizes of gas side pipes (field supply)							reducers to be used	dimension A (finished dimension for single unit installation)	dimension B (finished dimension for installation in rows)
	outside dia.	outdoor unit A		outdoor unit B		outdoor unit C				
		gas side pipe 1	gas side pipe 2	gas side pipe 1	gas side pipe 2	gas side pipe 1	gas side pipe 2			
8HP	φ19.1	100mm	100mm	100mm	118mm	100mm	331mm	reducers (1)	792mm	1022mm
10HP	φ22.2	100mm	100mm	100mm	118mm	100mm	331mm	reducers(3)+reducing socket (field supply) (refer to Fig.3)	814mm	1008mm
12~18HP	φ28.6	120mm	120mm	120mm	138mm	120mm	237mm	reducers (2)	888mm	1004mm

■Table 2

RX~M type

Outdoor Unit Capacity	elbow (field supply) C(mm)
5HP	17
8, 10HP	29
12, 14, 16HP	30

RX(Y)Q~ type

Outdoor Unit Capacity	elbow (field supply) C(mm)	reducing socket (field supply) AA(mm)	AB(mm)	AC(mm)
8HP	17			
10HP	23	25.4	22.2	33
12~18HP	30			

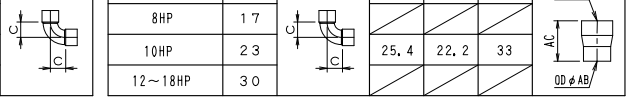

Fig. 3

- Cut the part of ▨, then braze the reducing socket (field supply).

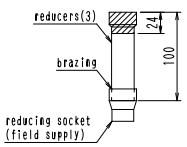

❷ Airtight Test and Vaccum drying

①Please proceed airtight test and vaccum drying.
●Directions for airtight test and vaccum drying on the installation manual attached to the outdoor unit must be followed.

❸ Pipe Insulation

①Please make proper insulation for this kit.
●Connected part of insulation for this kit and field pipes shall be sealed with tape.

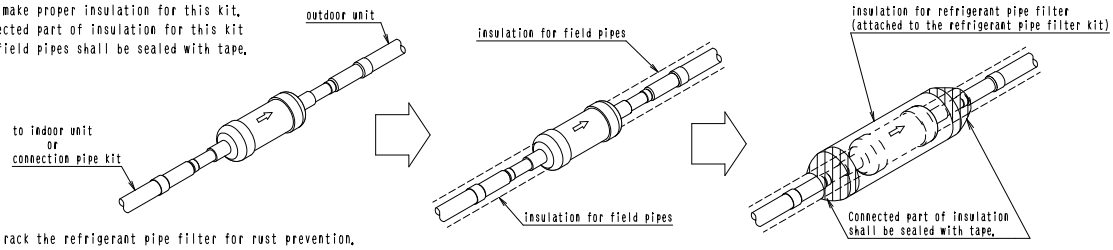

②Please rack the refrigerant pipe filter for rust prevention.

❹ Additional Refrigerant Charge and Works After Completion of Installation

①Please proceed additional charge of the refrigerant.
●For the additional charge of the refrigerant, please see the installation manual attached to the outdoor unit.
②Please make a confirmation upon completion of installation.
●All the check-points are described on the installation manual attached to the outdoor unit.

❺ Test Run

①Please proceed a test run.
●Method for the test run, see the installation manual attached to the outdoor unit.

1P229846A

14. Digital Pressure Gauge

14.1 BHGP26A1 (E)

Dimensions Unit (mm)

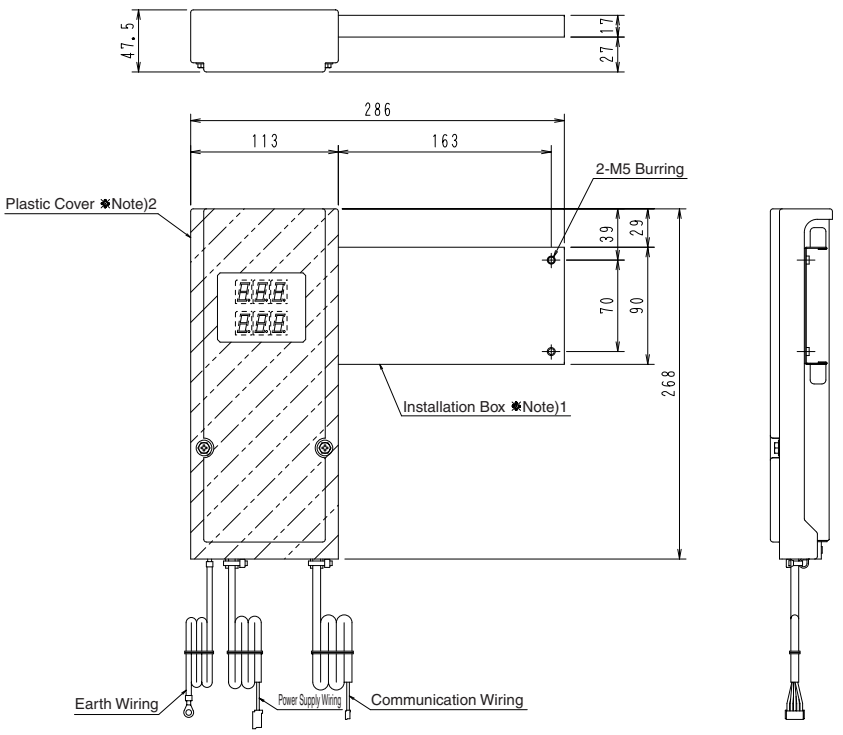

	Model Name
Standard Type	BHGP26A1
Anti-Corrosion Type	BHGP26A1E

Note) 1. Installation Box
[Materials] : SGCC-Z22 (Standard)
SGCC-F08 (Anti-Corrosion • Heavy Anti-Corrosion)
light Camel (Anti-Corrosion)
gray (Heavy Anti-Corrosion)
2. Plastic Cover
[Materials] : Methacrylate Resin
[Finish of Surface] : flat finish
3. Standard Accessory : Set of Fixing Screw
Clamp Material
Gauge Window Name Plate
Plastic bush
Fixing manual
4. This kit is assembled on site

C: 3D055954

Installation Manual

DAIKIN Air conditioner | **Sold separately** | Be sure to read and follow all the instructions in the Installation Manual when installing the product. 2P190979-1

Installation Manual of Digital Pressure Gauge Kit BHGP26A1 (E)

Component Parts

■ This Kit contains the following parts.

Parts name	Digital Pressure Gauge Assembly	Resin bush	Clamps		M5×12 screws	M4×12 screws	Gauge window label
			Small	Large			
Parts							
Number	1	1	6	1	2	1	1

Tools required for installation

Phillips screwdriver	Nippers

Cautions

- The Kit includes accessories required for installation. Do not dispose of these accessories until the product is properly installed.
- Before performing installation work, check with a catalog or technical data sheet that the outdoor unit is compatible with the Kit.

Installation procedure

Work procedure

⚠ Warning | **⚠ Electric Shock Cautions** — Be sure to work with the outdoor unit turned power OFF. An electric shock may be received if your body comes in contact with electric parts with the outdoor unit turned power ON.

1. Turn the outdoor unit power OFF.
2. Remove the front panel. (If the model has two front panels (i.e., one each on the left-hand side and right-hand side), remove the panel on the right-hand side only.)
3. Remove the lid of the electrical box.
4. Refer to the (Installation drawing) and mount the Digital Pressure Gauge Assembly to the panel on the right-hand side. [Parts used: Digital Pressure Gauge Assembly: 1; M5×12 screw: 2]
5. Secure the ground wire to the electrical box with a screw. Refer to section B (detail view) in the (Wiring drawing) for the screwing position. [Parts used: M4×12 screw: 1]
6. Connect the power supply line and communications line of the Digital Pressure Gauge Assembly to the control PCB (A1P) in the electrical box.
   - Power supply line: Connector (white) • X77A
   - Communications line: Connector (blue) • X27A

   At that time, wire the communications line behind the Digital Pressure Gauge Assembly. (Refer to section A (detail view) in the (Wiring drawing).)
7. After connecting the power supply line, communications line, and ground wire, secure the wiring path according to the (Wiring drawing). [Parts used: Clamps: small 6, large 1]
8. Mount the lid of the electrical box.
9. Punch out the knock hole with a diameter of 70 mm on the front panel. (Refer to the mounting dimensions on the upper right-hand side.)
10. Attach the resin bush to the knock hole on the front panel. [Parts used: Resin bush: 1]
11. Mount the front panel.
12. Paste the gauge window label to the front panel. Refer to the (Label pasting drawing) for the pasting position. [Parts used: Gauge window label]

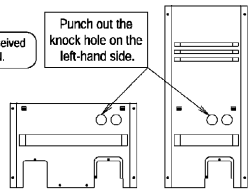

Knock hole on the front panel

Operation Check

⚠ Warning | **⚠ Electric Shock Cautions** — Close the lid of the electrical box and front panel before turning the product power ON. An electric shock may be received if your body comes in contact with electric parts.

On completion of installation, turn the outdoor unit and indoor unit power ON and make sure that pressures are displayed normally. When figures appear in the discharge pressure display and suction pressure display, the product is working normally. Refer to [Troubleshooting] on the right-hand side and take necessary remedies if no figures are displayed. If the trouble does not fall under any of the items described, contact your Daikin representative.

[Troubleshooting]

	Error display	Cause	Remedy
1	The LED indicator is not lit.	Power supply is not provided to the outdoor unit.	Provide power supply to the outdoor unit.
		The connector of the power supply line is unplugged.	Insert the connector of the power supply line.
		The power supply line is disconnected or damaged.	Replace the power supply line.
2	All LEDs blink.	The connector of the communications line is unplugged.	Plug in the connector of the communications line.
		The communications line is disconnected or damaged.	Replace the communications line.
		The outdoor unit is not compatible with the Kit.	Check with a catalog or technical data sheet if the outdoor unit is compatible with the Kit. If the outdoor unit is not compatible, this Kit cannot be used.
3	"□." blinks	The outdoor unit has a defect.	Refer to the Service Guide and remedy the problem.
		There is a high-voltage line generating noise around the communications line.	Noise may be imposed on the communications line. Separate the high-voltage line.

Wiring drawing

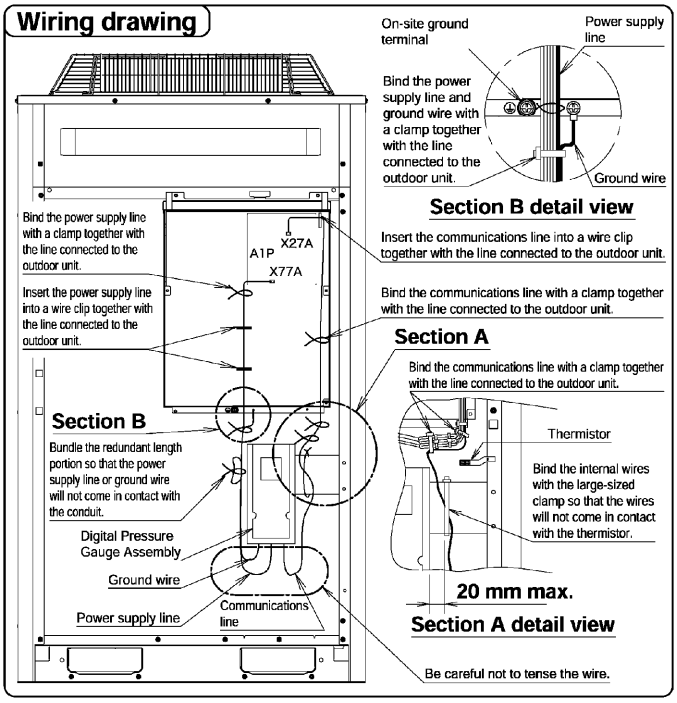

Installation drawing

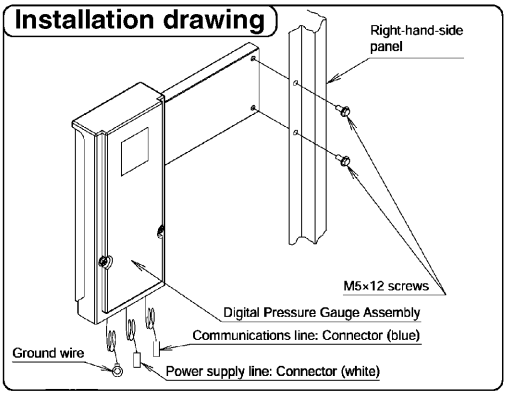

Label pasting drawing

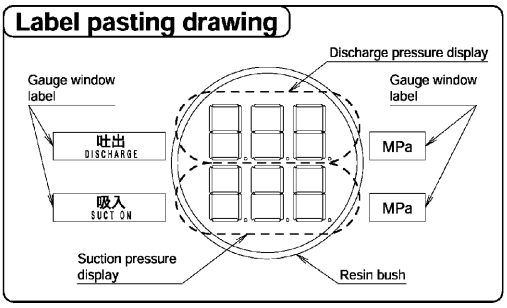

C: 2P190979

15. Strainer Kit

15.1 BWU26A15 / BWU26A20

1. Dimension

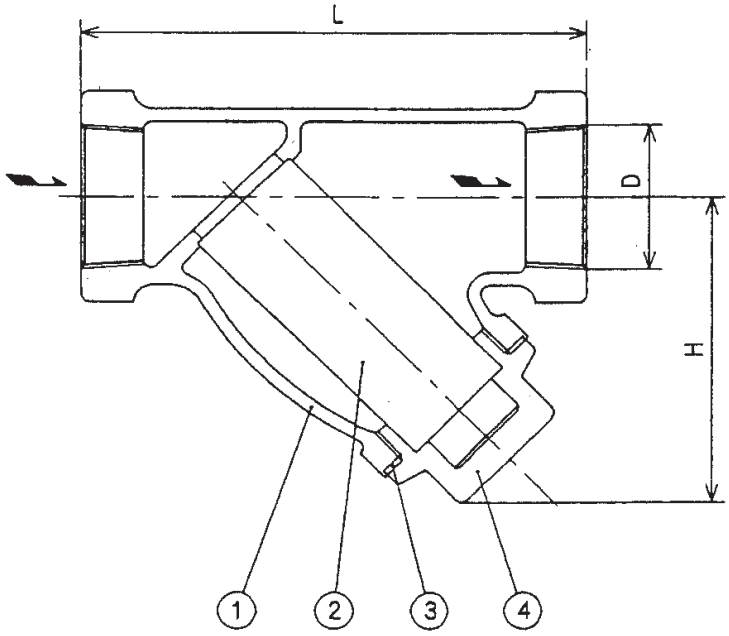

	Dimension					Material			
	Diameter	H	L	d2	H1	①	②	③	④
BWU26A15	1 1/4	82	135	RC1 1/4	130	CAC	SUS304	Non Asbestos Gasket	C3771BE
BWU26A20	1 1/4	90	135	RC1 1/4	130	FCD-S	SUS304	Non Asbestos Seet Gasket	C3771BE

2. Specification

Use fluid : Pulse water of 100°C or less
Use temperature : 0°C~70°C
Design pressure : BWU26A15 (1.47 MPa), BWU26A20 (1.96MPa)
Mesh size : 50 mesh

3D049231

3. Flowing Quantity Characteristic

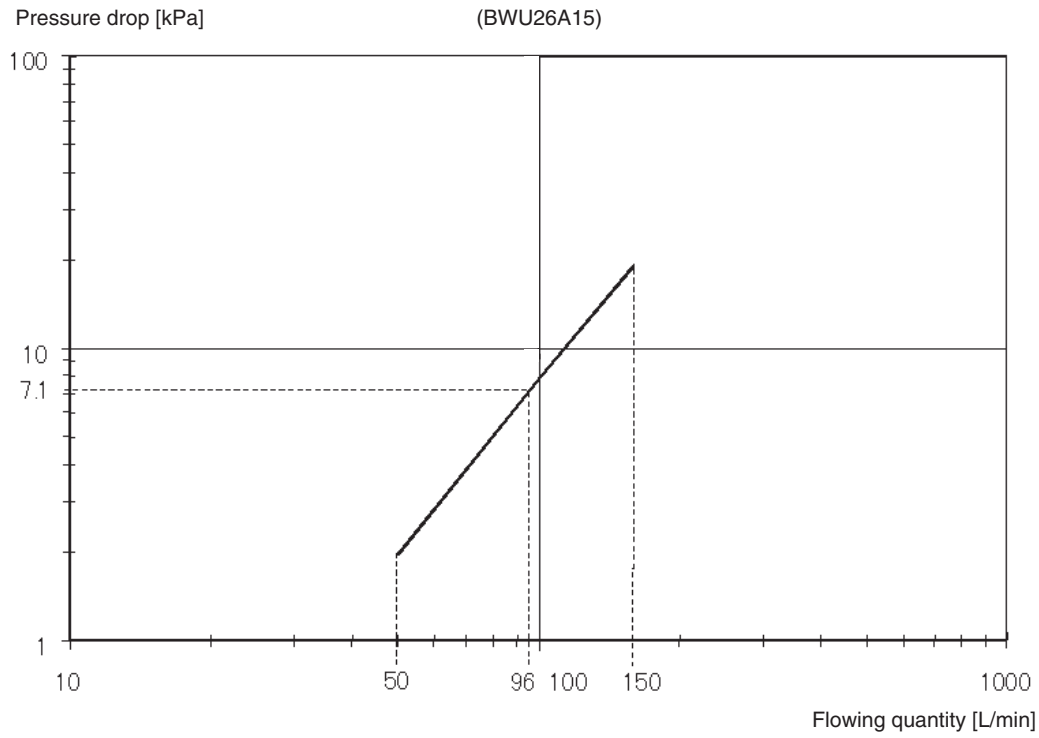

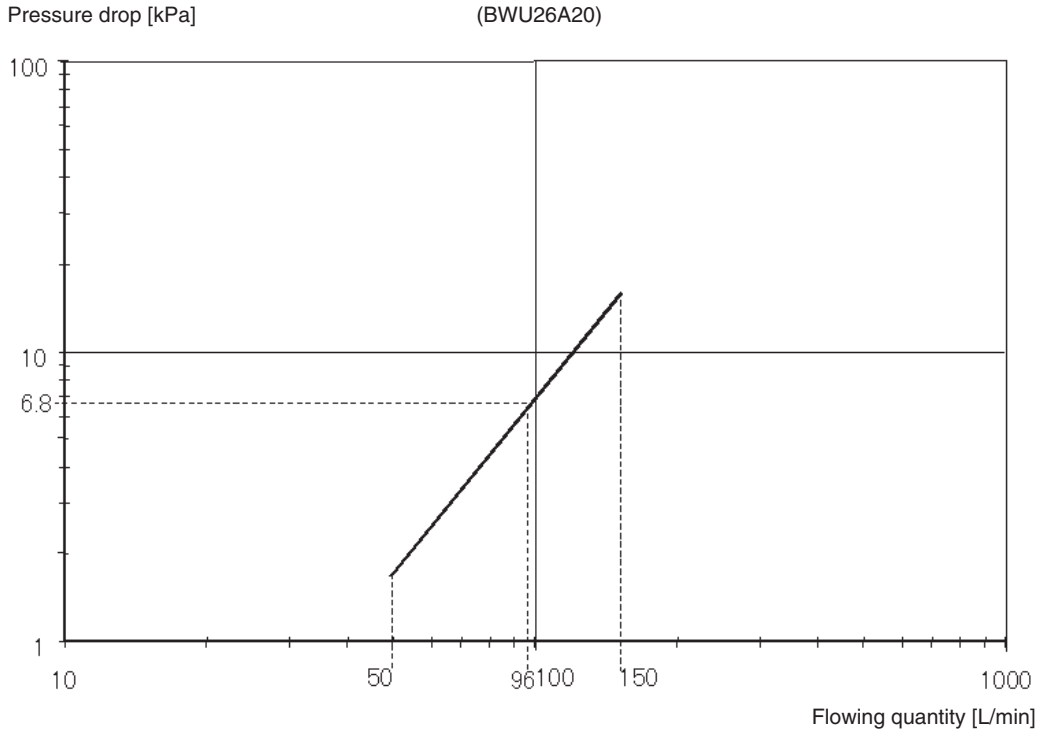

3D049231

Part 5
Index

Model name	Description	Page
B		
BHF22M90	Outdoor unit multi connection piping kit	759
BHF22M135	Outdoor unit multi connection piping kit	759
BHF26A450F	Refrigerant pipe filter kit	816
BHFP22MA56	Outdoor unit multi connection piping kit	780
BHFP22MA84	Outdoor unit multi connection piping kit	780
BHFP22P36C	Outdoor unit multi connection piping kit	787
BHFP22P54C	Outdoor unit multi connection piping kit	787
BHFP22P100	Outdoor unit multi connection piping kit	762
BHFP22P151	Outdoor unit multi connection piping kit	762
BHFP26MA56	Outdoor unit multi connection piping kit	780
BHFP26MA84	Outdoor unit multi connection piping kit	780
BHFP26P36C	Outdoor unit multi connection piping kit	791
BHFP26P63C	Outdoor unit multi connection piping kit	795
BHFP26P84C	Outdoor unit multi connection piping kit	799
BHFP26P90	Outdoor unit multi connection piping kit	768
BHFP26P136	Outdoor unit multi connection piping kit	768
BHGP26A1	Digital pressure gauge	819
BHGP26A1E	Digital pressure gauge	819
BRC1C62	Remote controller	210
BRC1D61	Wired remote controller with weekly schedule timer	231
BRC1E62	Navigation remote controller	215
BRC2C51	Simplified remote controller	238
BRC3A61	Remote controller for hotel use	242
BRC4C61	Remote controller	79
BRC4C62	Remote controller	79
BRC4C63	Remote controller	79
BRC4C64	Remote controller	79
BRC4C65	Remote controller	100
BRC4C66	Remote controller	100
BRC7C62	Remote controller	18
BRC7C67	Remote controller	18
BRC7CB58	Remote controller	185
BRC7CB59	Remote controller	185
BRC7E61W	Remote controller	37
BRC7E65	Remote controller	37
BRC7E530W	Remote controller	161
BRC7E531W	Remote controller	161
BRC7EA63W	Remote controller	120
BRC7EA66	Remote controller	120
BRC7EA618	Remote controller	138
BRC7EA619	Remote controller	138
BRC7F634F	Remote controller	56
BRC7F635F	Remote controller	56
BWU26A15	Strainer kit	821
BWU26A20	Strainer kit	821
BYBC32G-W1	Decoration panel	608
BYBC50G-W1	Decoration panel	608
BYBC63G-W1	Decoration panel	608
BYBC125G-W1	Decoration panel	608
BYBS32DJW1	Decoration panel	644
BYBS45DJW1	Decoration panel	644
BYBS71DJW1	Decoration panel	644
BYBS125DJW1	Decoration panel	644
BYCP125D-W1	Decoration pane	530
BYCP125K-W1	Decoration pane	526
BYCQ125B-W1	Decoration pane	516
BYFQ60B8W1	Decoration panel	593
BYK45FJW1	Decoration panel	616
BYK71FJW1	Decoration panel	616
D		
DAM411B51	Optional DIII board	488
DAM412B51	Optional Di board	491
DCM002A51	intelligent touch manager	467
DCM601A51	intelligent touch manager	465
DCM601A52	intelligent touch manager	466
DCS301BA61	Unified ON/OFF controller	368
DCS302A52	Unification adaptor for computerized control	507
DCS302CA61	Central remote controller	335
DCS303A51	Residential central remote controller	324
DCS601A52	intelligent touch controller	448
DCS601C51	intelligent touch controller	412
DEC101A51	Di unit	477
DEC102A51	Dio unit	480
DMS502B51	Interface for use in BACnet®	482
DMS504B51	Interface for use in LonWorks®	494
DST301BA61	Schedule timer	379
DTA103A51	Wiring adaptor for other air-conditioner	403
DTA104A53	External control adaptor for outdoor unit	305
DTA104A61	External control adaptor for outdoor unit	305
DTA104A62	External control adaptor for outdoor unit	305
DTA107A55	Central control adaptor kit	399
DTA109A51	DIII-NET expander adaptor	407
DTA112BA51	Interface adaptor for SkyAir series	397
DTA114A61	Adaptor for multi tenant	314
DTA116A51	Home automation interface adaptor	501
K		
K-ABSG1406A-1410A	Vibration isolating frame	729
KAF55DA160	Ultra long-life filter unit (including chamber)	582
KAF55KA160H	Replacement ultra long-life filter	586
KAF-91A140	Long-life filter	725
KAF-91A200	Long-life filter	725
KAF-91A280	Long-life filter	725
KAF-91A400	Long-life filter	725
KAF-91A560	Long-life filter	725
KAF-92A140	High efficiency filter	726
KAF-92A200	High efficiency filter	726
KAF-92A280	High efficiency filter	726
KAF-92A400	High efficiency filter	726
KAF-92A560	High efficiency filter	726
KAF-93A140	High efficiency filter	726
KAF-93A200	High efficiency filter	726
KAF-93A280	High efficiency filter	726
KAF-93A400	High efficiency filter	726
KAF-93A560	High efficiency filter	726
KAF252LA56	High-efficiency filter	667
KAF252LA80	High-efficiency filter	667
KAF252LA160	High-efficiency filter	667
KAF253LA56	High-efficiency filter	667
KAF253LA80	High-efficiency filter	667
KAF253LA160	High-efficiency filter	667
KAF371AA36	Long-life filter	690
KAF371AA56	Long-life filter	690
KAF371AA80	Long-life filter	690
KAF371AA160	Long-life filter	690
KAF372AA36	High efficiency filter	679
KAF372AA56	High efficiency filter	679
KAF372AA80	High efficiency filter	679
KAF372AA160	High efficiency filter	679
KAF373AA36	High efficiency filter	679
KAF373AA56	High efficiency filter	679
KAF373AA80	High efficiency filter	679
KAF373AA160	High efficiency filter	679
KAF375AA36	Long-life filter chamber kit	692
KAF375AA56	Long-life filter chamber kit	692

Model name	Description	Page
KAF375AA80	Long-life filter chamber kit	692
KAF375AA160	Long-life filter chamber kit	692
KAF501DA56	Replacement long-life filter	703
KAF501DA80	Replacement long-life filter	703
KAF501DA112	Replacement long-life filter	703
KAF551CA160	Replacement long-life filter	578
KAF556DA80	High efficiency filter (including chamber)	567
KAF556DA160	High efficiency filter (including chamber)	567
KAF557DA80	High efficiency filter (including chamber)	567
KAF557DA160	High efficiency filter (including chamber)	567
KAFJ251K36	Replacement long-life filter	673
KAFJ251K56	Replacement long-life filter	673
KAFJ251K80	Replacement long-life filter	673
KAFJ251K160	Replacement long-life filter	673
KAFJ252L36	High-efficiency filter	667
KAFJ253L36	High-efficiency filter	667
KAFJ261L140	Replacement long-life filter	723
KAFJ261L224	Replacement long-life filter	723
KAFJ261L280	Replacement long-life filter	723
KAFJ261M450	Replacement long-life filter	723
KAFJ261M560	Replacement long-life filter	723
KAFJ361K28	Long-life replacement filter	722
KAFJ361K45	Long-life replacement filter	722
KAFJ361K71	Long-life replacement filter	722
KAFJ371L140	Long-life replacement filter	691
KAFJ371L280	Long-life replacement filter	691
KAFJ372L140	High efficiency filter	680
KAFJ372L280	High efficiency filter	680
KAFJ373L140	High efficiency filter	680
KAFJ373L280	High efficiency filter	680
KAFJ521F56	Replacement long-life filter	625
KAFJ521F80	Replacement long-life filter	625
KAFJ531G36	Long-life replacement filter	615
KAFJ531G56	Long-life replacement filter	615
KAFJ531G80	Long-life replacement filter	615
KAFJ531G160	Long-life replacement filter	615
KAFJ532G36	High-efficiency filter	611
KAFJ532G56	High-efficiency filter	611
KAFJ532G80	High-efficiency filter	611
KAFJ532G160	High-efficiency filter	611
KAFJ533G36	High-efficiency filter	611
KAFJ533G56	High-efficiency filter	611
KAFJ533G80	High-efficiency filter	611
KAFJ533G160	High-efficiency filter	611
KAFP55B160	Ultra long-life filter unit (including chamber)	579
KAFP55H160H	Replacement ultra long-life filter	585
KAFP371A80	Long-life replacement filter	691
KAFP371A160	Long-life replacement filter	691
KAFP372A80	High-efficiency filter	680
KAFP372A160	High-efficiency filter	680
KAFP373A80	High-efficiency filter	680
KAFP373A160	High-efficiency filter	680
KAFP551K160	Replacement long-life filter	577
KAFP552B80	Replacement high efficiency filter	570
KAFP552B160	Replacement high efficiency filter	570
KAFP553B80	Replacement high efficiency filter	570
KAFP553B160	Replacement high efficiency filter	570
KAFP556B80	High efficiency filter unit	564
KAFP556B160	High efficiency filter unit	564
KAFP557B80	High efficiency filter unit	564
KAFP557B160	High efficiency filter unit	564
KAFQ441BA60	Replacement long-life filter	604
KAFSJ9A400	Ultra long-life filter unit	723

Model name	Description	Page
KAFSJ9A560	Ultra long-life filter unit	723
KAJ25L36B	Filter chamber for rear suction	669
KAJ25L36D	Filter chamber for bottom suction	668
KAJ25LA56B	Filter chamber for rear suction	669
KAJ25LA56D	Filter chamber for bottom suction	668
KAJ25LA80B	Filter chamber for rear suction	669
KAJ25LA80D	Filter chamber for bottom suction	668
KAJ25LA160B	Filter chamber for rear suction	669
KAJ25LA160D	Filter chamber for bottom suction	668
KBBJ25K36	Screening door	675
KBBJ25KA56	Screening door	675
KBBJ25KA80	Screening door	675
KBBJ25KA160	Screening door	675
KD-9A140	Front suction base flange	724
KD-9A200	Front suction base flange	724
KD-9A280	Front suction base flange	724
KD-9A400	Front suction base flange	724
KD-9A560	Front suction base flange	724
KD101A10	Discharge grille for plenum side	728
KD101A20	Discharge grille for plenum side	728
KD106D10	Fresh air intake kit	727
KDAJ25K36A	Air discharge adaptor	677
KDAJ25K56A	Air discharge adaptor	677
KDAJ25K71A	Air discharge adaptor	677
KDAJ25K140A	Air discharge adaptor	677
KDBH44BA60	Sealing material of air discharge outlet	596
KDBH55D160W	Sealing material of air discharge outlet	538
KDBH55K160F	Sealing member of air discharge outlet	534
KDBHP49B140	Sealing member of air discharge outlet	606
KDBHQ55B140	Sealing member of air discharge outlet	522
KDBJ52F56W	Air discharge blind panel	626
KDBJ52F80W	Air discharge blind panel	626
KDBP55H160FA	Panel spacer	541
KDBP55H160WA	Panel spacer	541
KDBQ44BA60A	Panel spacer	599
KDBTP49B140	Decoration panel for air discharge	605
KDD55DA160	Fresh air intake kit (chamber type)	549
KDD55DA160K	Fresh air intake kit (chamber type)	549
KDDF37AA36	High efficiency filter chamber	682
KDDF37AA56	High efficiency filter chamber	682
KDDF37AA80	High efficiency filter chamber	682
KDDF37AA160	High efficiency filter chamber	682
KDDF55DA160	High efficiency filter chamber	574
KDDF-92A140	High efficiency filter chamber	724
KDDF-92A200	High efficiency filter chamber	724
KDDF-92A280	High efficiency filter chamber	724
KDDF-92A400	High efficiency filter chamber	724
KDDF-92A560	High efficiency filter chamber	724
KDDF-93A140	High efficiency filter chamber	724
KDDF-93A200	High efficiency filter chamber	724
KDDF-93A280	High efficiency filter chamber	724
KDDF-93A400	High efficiency filter chamber	724
KDDF-93A560	High efficiency filter chamber	724
KDDFJ53G36	Filter chamber for bottom suction	614
KDDFJ53G56	Filter chamber for bottom suction	614
KDDFJ53G80	Filter chamber for bottom suction	614
KDDFJ53G160	Filter chamber for bottom suction	614
KDDFP37A80	Filter chamber	685
KDDFP37A160	Filter chamber	685
KDDFP55B160	High efficiency filter chamber	571
KDDJ55XA160	Fresh air intake kit (direct installation type)	556
KDDP55B160	Fresh air intake kit (chamber type)	544
KDDP55B160K	Fresh air intake kit (chamber type)	544

Model name	Description	Page
KDDP55X160	Fresh air intake kit (direct installation type)	553
KDDQ44XA60	Fresh air intake kit (direct installation type)	602
KDDQ55B140	Fresh air intake kit (without dust fan)	524
KDFJ905A140	Rear suction kit	728
KDFJ905A200	Rear suction kit	728
KDFJ905A280	Rear suction kit	728
KDFJ905A400	Rear suction kit	728
KDFJ905A560	Rear suction kit	728
KDFJ906A560	Fresh air intake kit	727
KDGF-9A140	Suction grille	725
KDGF-9A200	Suction grille	725
KDGF-9A280	Suction grille	725
KDGF-9A400	Suction grille	725
KDGF-9A560	Suction grille	725
KDGF19A45	Decoration panel	643
KDGF19A71	Decoration panel	643
KDJ2507K36	Air suction flange	676
KDJ2507K56	Air suction flange	676
KDJ2507K80	Air suction flange	676
KDJ2507K160	Air suction flange	676
KDJ3705L140	Filter chamber	688
KDJ3705L280	Filter chamber	688
KDJP55B80	Branch duct chamber	587
KDJP55B160	Branch duct chamber	587
KDP55DA80	Branch duct chamber	590
KDP55DA160	Branch duct chamber	590
KDT25N32	Insulation kit for high humidity	642
KDT25N50	Insulation kit for high humidity	642
KDT25N63	Insulation kit for high humidity	642
KDT-55DA80	Insulation kit for high humidity	562
KDT-55DA160	Insulation kit for high humidity	562
KDTP55K80	Insulation kit for high humidity	560
KDTP55K160	Insulation kit for high humidity	560
KDU-30L125VE	Drain pump kit	698
KDU30L250VE	Drain pump kit	695
KDU50B50VE	Drain pump kit	709
KDU50B71VE	Drain pump kit	709
KDU50B125VE	Drain pump kit	709
KDU50N60VE	Drain-up kit	704
KDU50N125VE	Drain-up kit	704
KEA25K32VE	Auxiliary electric heater	662
KEA25K50VE	Auxiliary electric heater	662
KEA25K63VE	Auxiliary electric heater	662
KEA25K100VE	Auxiliary electric heater	662
KEA25K125VE	Auxiliary electric heater	662
KEK26-1A	Noise filter (for electromagnetic interface use only)	376
KFDJ52FA56	Flexible duct with shutter	634
KFDJ52FA80	Flexible duct with shutter	634
KHFJ5F50	L-type piping kit (for upward direction)	711
KHFJ5F80	L-type piping kit (for upward direction)	711
KHFJ5F160	L-type piping kit (for upward direction)	711
KHFP5MA63	L-type piping kit (for upward direction)	710
KHFP5MA160	L-type piping kit (for upward direction)	710
KHFP22B8P	Auxiliary pipe kit	805
KHFP22B10P	Auxiliary pipe kit	805
KHFP22B12P	Auxiliary pipe kit	805
KHFP22B16P	Auxiliary pipe kit	805
KHFP22B18P	Auxiliary pipe kit	805
KHFP26A100C	Closed pipe kit	806
KHRJ26K11H	REFNET header	735
KHRJ26K11T	REFNET joint	745
KHRJ26K17H	REFNET header	735
KHRJ26K17T	REFNET joint	745

Model name	Description	Page
KHRJ26K18H	REFNET header	735
KHRJ26K18T	REFNET joint	745
KHRJ26K37H	REFNET header	735
KHRJ26K37T	REFNET joint	745
KHRJ26K40H	REFNET header	735
KHRJ26K40HP	Pipe size reducer	804
KHRJ26K40T	REFNET joint	745
KHRJ26K40TP	Pipe size reducer	804
KHRJ26K75T	REFNET joint	745
KHRJ26K75TP	Pipe size reducer	804
KHRJ26K76TP	Pipe size reducer	804
KHRP25A22T	REFNET joint	756
KHRP25A33T	REFNET joint	756
KHRP25A72T	REFNET joint	756
KHRP25A73T	REFNET joint	756
KHRP25M33H	REFNET header	742
KHRP25M72H	REFNET header	742
KHRP25M73H	REFNET header	742
KHRP26A22T	REFNET joint	753
KHRP26A33T	REFNET joint	753
KHRP26A72T	REFNET joint	753
KHRP26A73T	REFNET joint	753
KHRP26M22H	REFNET header	739
KHRP26M33H	REFNET header	739
KHRP26M72H	REFNET header	739
KHRP26M73H	REFNET header	739
KHRP26M73HP	Pipe size reducer	803
KHRP26M73TP	Pipe size reducer	803
K-HV7AW	Discharge grille	633
K-HV9AW	Discharge grille	633
KJB111A	Fixing box	734
KJB212AA	Electrical box with earth terminal	366
KJB311AA	Electrical box with earth terminal	366
KJB411A	Electrical box with earth terminal	366
K-KDU572EVE	Drain pump kit	712
KKPJ5F180	Central drain plug	812
KKSJ55KA160	Chamber connection kit	559
KKWJ9A140	Wood base	729
KKWJ9A400	Wood base	729
K-KYZP15C	Wire fixture for preventing overturning	813
KNM25K32V1	Natural evaporating pan type humidifier	651
KNM25K50V1	Natural evaporating pan type humidifier	651
KNM25K63V1	Natural evaporating pan type humidifier	651
KNM25K125V1	Natural evaporating pan type humidifier	651
KPBJ52F56W	Panel spacer	620
KPBJ52F80W	Panel spacer	620
KPC5J	Plenum chamber	726
KPC8J	Plenum chamber	726
KPC15JA	Plenum chamber	726
KPCJ140A	Plenum chamber	726
KPCJ400A	Plenum chamber	726
KPP5JA	Pulley for plenum chamber	727
KPP8JA	Pulley for plenum chamber	727
KPP9JA	Pulley for plenum chamber	727
KPP10JA	Pulley for plenum chamber	727
KPT-60B160	Fixture for preventing overturning	815
KRC19-26A	Cool / Heat selector	733
KRCB37-1	Remote controller box with key	322
KRCS01-1B	Remote sensor (for indoor temperature)	281
KRCS01-4B	Remote sensor (for indoor temperature)	281
KRP1B56	Adaptor for wiring	250
KRP1B61	Adaptor for wiring	247
KRP1B96	Installation box for adaptor PCB	294

Model name	Description	Page
KRP1B100	Installation box for adaptor PCB	295
KRP1BA54	Adaptor for wiring	250
KRP1BA57	Adaptor for wiring	250
KRP1BA59	Adaptor for wiring	250
KRP1BA97	Installation box for adaptor PCB	303
KRP1BA101	Installation box for adaptor PCB	287
KRP1C63	Adaptor for wiring	252
KRP1C64	Adaptor for wiring	254
KRP1C67	Adaptor for wiring	257
KRP1CA93	Installation box for adaptor PCB	301
KRP1DA98	Installation box for adaptor PCB	292
KRP1H98	Installation box for adaptor PCB	283
KRP2A53	Wiring adaptor for electrical appendices	259
KRP2A61	Wiring adaptor for electrical appendices	259
KRP2A62	Wiring adaptor for electrical appendices	259
KRP4A54	Wiring adaptor for electrical appendices	270
KRP4A91	Installation box for adaptor PCB	294
KRP4A92	DIII-NET expander adaptor	411
KRP4A96	Installation box for adaptor PCB	297
KRP4AA51	Wiring adaptor for electrical appendices	270
KRP4AA52	Wiring adaptor for electrical appendices	270
KRP4AA53	Wiring adaptor for electrical appendices	270
KRP4AA93	Installation box for adaptor PCB	299
KRP6A1	External control adaptor for cooling / heating	318
KSA-25K36	Canvas duct (air suction canvas)	674
KSA-25KA56	Canvas duct (air suction canvas)	674
KSA-25KA80	Canvas duct (air suction canvas)	674
KSA-25KA160	Canvas duct (air suction canvas)	674
KTB25KA56W	Service access panel	648
KTB25KA80W	Service access panel	648
KTB25KA160W	Service access panel	648
KTBJ25K36W	Service access panel	648
KWC25C450	Central drain pan kit	809
KWC26B160	Central drain pan kit	807
KWC26B160E	Central drain pan kit	807
KWC26B280	Central drain pan kit	807
KWC26B280E	Central drain pan kit	807
KWC26B450	Central drain pan kit	807
KWC26B450E	Central drain pan kit	807
KWC26C160	Central drain pan kit	809
KWC26C160E	Central drain pan kit	809
KWC26C280	Central drain pan kit	809
KWC26C280E	Central drain pan kit	809
KWC26C450	Central drain pan kit	809
KWC26C450E	Central drain pan kit	809
KWF1G5P	Wood base	729
KWF1G8P	Wood base	729
KWF1G15	Wood base	729

Warning

- Ask a qualified installer or contractor to install this product. Do not try to install the product yourself. Improper installation can result in water or refrigerant leakage, electrical shock, fire or explosion.
- Use only those parts and accessories supplied or specified by Daikin. Ask a qualified installer or contractor to install those parts and accessories. Use of unauthorised parts and accessories or improper installation of parts and accessories can result in water or refrigerant leakage, electrical shock, fire or explosion.
- Read the User's Manual carefully before using this product. The User's Manual provides important safety instructions and warnings. Be sure to follow these instructions and warnings.

If you have any enquiries, please contact your local importer, distributor and/or retailer.

Cautions on product corrosion

1. Air conditioners should not be installed in areas where corrosive gases, such as acid gas or alkaline gas, are produced.
2. If the outdoor unit is to be installed close to the sea shore, direct exposure to the sea breeze should be avoided. If you need to install the outdoor unit close to the sea shore, contact your local distributor.

● Specifications, designs and other content appearing in this brochure are current as of April 2014 but subject to change without notice.

©All rights reserved 04/14 FS